Technical Systems Inc.
Corporate Office
2303 196th Street SW
Lynnwood, WA 98036
Tel 425.775.5696
TSIcontrols.com

VOLUME 1

OPERATION & MAINTENANCE INFORMATION

CITY OF WENATCHEE WWTP
WWTP IMPROVEMENTS PROJECT P0913

BY

TECHNICAL SYSTEMS, INC.
2303 196th St SW
Lynnwood, Washington
(425) 775-5696

FOR

MAGNUM ELECTRIC

TSI JOB 7374

Bill of Materials
Vendors List
13442 – Primary Elements & Transmitters
13446 - Control Auxiliary
13448 – Control Panels & Enclosures
13449 – Source Protections Devices for Instrumentation & Control Equipment
13500 – PLC Control Systems
Drawings

Final O&M - November 2013

TABLE OF CONTENTS

VOLUME 1

Table of Contents

Bill of Materials

Vendors List

13442 – PRIMARY ELEMENTS & TRANSMITTERS

ITEM NO.	MANUFACTURER	DESCRIPTION
1	McDonnell & Miller	123010 AFE-1 Air Flow Switch Installation & Maintenance Instructions
2	Anchor Scientific	D50NO Level Switch Specifications & Installation Instructions
3	MSA	Ultima XE with XIR Sensor Installation Outline
3	MSA	A-UltimaX XP Gas Monitor with XIR Sensor Quick Start-up Guide
3	MSA	Ultima X Series Gas Monitors Instruction Manual
4-6	Federal Signal	225XST Strobe Light Installation & Service Instructions
7	Federal Signal	350WB Vibratone Horn Installation Instructions
7	Federal Signal	350 Vibratone Horn Weatherproof Panel Mounting Instructions
7	Federal Signal	350 Vibratone Horn Volume Adjustment Instructions

13446 – CONTROL AUXILIARY

ITEM NO.	MANUFACTURER	DESCRIPTION
303	Square D	RXM2AB3F7 Relay Data Sheet
304	Square D	RXZE2S108M Relay Socket Data Sheet
305	Phoenix Contact	2938837 Power Supply Instructions
310	Phoenix Contact	3044102 Terminal Block Specifications
311	Phoenix Contact	3044128 Terminal Block Specifications
312	Phoenix Contact	3047028 Terminal Block End Cover Specifications
314	Phoenix Contact	0800886 Terminal Block End Anchor Specifications
317	Phoenix Contact	3030365 Plug-In Bridge Specifications
320, 323	Littelfuse	217 Fast Acting Fuse Data Sheet
321, 322	A-B	1492-WFB Terminal Block Instructions
509	Hewlett-Packard	3400CL-24G Ethernet Switch Installation & Getting Started Guide
509	Hewlett-Packard	3400CL-24G Ethernet Switch Management & Configuration Guide
701	CablesPlus USA	AP-VAAWC6 Fiber Optic Adapter Panel Specification Drawing

13448 – CONTROL PANELS & ENCLOSURES

ITEM NO.	MANUFACTURER	DESCRIPTION
200	Hoffman	A723624FS Enclosure Specifications
200	Hoffman	A723624FS Enclosure Safe Handling Requirements
201	Hoffman	A72P36 Back Panel Specifications
210, 211	Pfannenberg	PF32000, PFA30000 Filtered Fan Package Installation & Operating Instructions
212	Hoffman	ALFSWD Light Package Switch Instructions

13448 – CONTROL PANELS & ENCLOSURES cont'd

ITEM NO.	MANUFACTURER	DESCRIPTION
213	ISC Sales	ISCKT-011-NO Thermostat Specifications
214, 215	GE	16547, F15T8WW Fluorescent Panel Light Installation Instructions
216	A-B	1492-REC15G DIN Rail Receptacle Installation Instructions
217	Phoenix Contact	2963860 Receptacle Data Sheet
300	Square D	60112 Miniature Circuit Breaker Data Sheet
301	Square D	60110 Miniature Circuit Breaker Data Sheet
324	Liebert	GXT3 1000RT120 UPS Safety Instructions
324	Liebert	GTX3 1000RT120 UPS User Manual
700	CablesPlus USA	WAC-2x Fiber Enclosure Specifications

13449 – SOURCE PROTECTION DEVICES FOR INSTRUMENTATION & CONTROL EQUIPMENT

ITEM NO.	MANUFACTURER	DESCRIPTION
302	Edco	HSP121BT-1RU Surge Suppression Installation Instructions

13500 – PLC CONTROL SYSTEMS

ITEM NO.	MANUFACTURER	DESCRIPTION
500	Siemens	6ES7315-2AH14-0AB0 S7-300 CPU 315-2DP Technical Specifications
500	Siemens	6ES7315-2AH14-0AB0 S7-300 CPU 315-2DP Installation & Operating Instructions
501, 503, 504, 505	Siemens	6ES7 Modules Manual
502	Siemens	6ES7 390-1AF30-0AA0 DIN Mounting Rail Specifications
506	Siemens	6ES7971-1AA00-0AA0 Front Connector Product Information
507	Siemens	6GK343-1CX10-0XE0 CP 343-1 Lean Communications Processor Manual
508	Siemens	6ES7 971-1AA00-0AA0 Backup Battery Specifications

DRAWINGS

TECHNICAL SYSTEMS INC. (425) 775-5696 2303 196TH STREET SW LYNNWOOD, WA 98036				City Of Wenatchee WWTP WWTP Improvements Project P0913	Customer Magnum Electric		Bill of Materials TSI Project: 7374	
Item #	Qty.	Tag No.	Manufacturer Part No.	Description	Specification Section	Manufacturer	Vendor	P.O. No.
				FIELD EQUIPMENT				
1	5	FSL-12051; FSL-31031A; FSL-31031B; FSL-51005; FSL-51020	123010	Air Flow Switch Series AFE-1; NEMA 7; 1/2" NPT Connection; 120 VAC; Paddle Fit 8" Min. Duct Size	13442	ITT McDonnel & Miller	APEX Controls.com	7374-cc
2	1	LSH-12001	D50NO	Float-Tilt Type Level Switch; Non_Mercury Element;50'	13442	Anchor-Scientific	Anchor-Scientific	07374-005
3	1	AE-120004	A-Ultima X XP-E-38-U-3-D-2-0-0-0-0-1-0-0	Ultima X XP Series Gas Monitor w/ Combustible Infrared Sensor; 316 Stainless Steel Enclosure; UL Approved	13442	MSA	CB Engineer Pacific	07374-006
4	3		225XST-120R	Strobe Warning Light; 120 VAC; Model 225XST Approved For Class I Division 2; Red	13442	Federal Signal Corp.	CED	07374-003
5	3		K8444D219C-04	Exterior Dome For Item 4; Clear 120 VAC	13442	Federal Signal Corp.	CED	07374-003
6	3		K8550C095A-03	Interior Lens For Item 4; Red	13442	Federal Signal Corp.	CED	07374-003
7	3		350WBX-120	Vibratone Hazadous Location Horn; Model 350WBX Rated For Class I, Division 2; 100 dBa @ 10'; 120 VAC	13442	Federal Signal Corp.	CED	07374-003
				SRCP - 12000 CONTROL PANEL HARDWARE				
200	1		A723624FS	NEMA 12 Free-Stand Enclosure; 72.06"H x 36.06"W x 24"D	13448	Hoffman	Graybar	07374-001
201	1		A72P36	Painted Steel Back Panel For Item 200	13448	Hoffman	Graybar	07374-001
210	1		PF32000	Cooling Fan And Exhaust Package; 115 VAC ; Lt Grey	13448	Pfannenberg	CED	07374-003
211	1		PFA30000	Exhaust Filter	13448	Pfannenberg	CED	07374-003
212	1		ALFSWD	Door activated light switch	13448	Hoffman	Graybar	07374-001
213	1		ISCKT-011-NO	Cooling Control Thermostat	13448	ISC	ISC Sales	stock
214	1		16547 (UCF-18/DW/ADV)	Fluorescent Lighting Package, Under Cabinet style, 15-Watt bulb, hard-wired 120 VAC w/integral ON/OFF switch , 18.38"L x 4.8"D x 1.75"H	13448	GE	Home Depot	stock
215	1		F15T8WW	Fluorescent Tube, 15W	13448	GE	Home Depot	stock
216	1		1492-REC15G	Receptacle, GFCI, 15A/125VAC, DIN rail mounting, duplex	13448	Allen-Bradley	North Coast Electric	
217	1		2963860	Receptacle, 15A/125VAC, DIN rail mounting, simplex	13448	Phoenix Contact	Graybar	07374-001
300	6		60112	UL 489 Listed circuit breaker, single pole, din rail mount, 15-amp, 120VAC/60VDC, 10kA	13448	Square D	Graybar	07374-001
301	1		60110	UL 489 Listed circuit breaker, single pole, din rail mount, 10-amp, 120VAC/60VDC, 10kA	13448	Square D	Graybar	07374-001
302	1		HSP121BT-1RU	Surge Suppressor, 120VAC, Single Phase, 15 Amp	13449	Edco	Emerson Network Pwr.	
303	5	CR's	RXM2AB3F7	Control relay, 2PDT 12-amp contacts,120 VAC coil, LED status indicator	13446	Telemecanique	Graybar	07374-001
304	5		RXZE2S108M	Relay socket for 2PDT relay, 12-amp rated	13446	Telemecanique	Graybar	07374-001
305	1	PS	2938837	Power Supply, MINI Series, 24VDC (22.5-29.5VDC range setting), 4.0 amps, 85-264VAC input	13446	Phoenix Contact	Graybar	07374-001
310	100	TB	3044102	Terminal block, UT4, grey, 26-10 AWG, 600V, 30A	13446	Phoenix Contact	Graybar	07374-001
311	20	TB	3044128	Terminal block, grounded, UT4-PE, green-yellow, 26-10 AWG	13446	Phoenix Contact	Graybar	07374-001
312	10	TB	3047028	Terminal block end cover for UT terminals	13446	Phoenix Contact	Graybar	07374-001
314	10	TB	0800886	Terminal block end anchor, 9.5mm width	13446	Phoenix Contact	Graybar	07374-001
317	2	TB	3030365	Terminal block cross connector/jumper, red, 20 position (trim to fit as needed)	13446	Phoenix Contact	Graybar	07374-001
320	10		0217002.HXP	Fuse, 2 Amp, Glass Body, 5x20mm, Fast Acting, 250VAC	13446	Littelfuse	CED	07374-003
321	7		1492-WFB4250	Fusible terminal block, 5x20mm fuse, black, 100-300VAC, neon blown fuse indicator, 30-12 AWG, 15A	13446	Allen-Bradley	North Coast Electric	
322	12		1492-WFB424	Fusible terminal block, 5x20mm fuse, black, 10-57VAC/VDC, red LED blown fuse indicator, 30-12 AWG, 15A	13446	Allen-Bradley	North Coast Electric	
323	9		0217001.HXP	Fuse, 1 Amp, Glass Body, 5x20mm, Fast Acting, 250VAC	13446	Littelfuse	CED	07374-003
324	1		GXT3-1000RT120	True On-Line UPS 1000 VA	13448	Liebert Corp.	Emerson Network Pwr.	

Item #	Qty.	Tag No.	Manufacturer Part No.	Description	Specification Section	Manufacturer	Vendor	P.O. No.
500	1	PLC-12000	6ES7315-2AH14-0AB0	SIMATIC S7-300, CPU 315-2DP CPU WITH MPI INTERFACE INTEGRATED 24 V DC POWER SUPPLY 64 KBYTE WORKING MEMORY 2. INTERFACE DP-MASTER/SLAVE	13500	Siemens	Cascade Controls	07374-002
501	1		6ES7307-1EA00-0AA0	SIMATIC S7-300,LOAD POWER SUPP. PS 307, 120/230 V AC, 24 V DC, 5 A	13500	Siemens	Cascade Controls	07374-002
502	1		6ES7 390-1AF30-0AA0	SIMATIC S7-300, RAIL L=530MM	13500	Siemens	Cascade Controls	07374-002
503	4		6ES7 321-1FH00-0AA0	SIMATIC S7-300, DIGITAL INPUT SM 321, OPTICALLY ISOLATED 16 DI, 120/230V AC, 20 PIN	13500	Siemens	Cascade Controls	07374-002
504	1		6ES7 322-1HH01-0AA0	SIMATIC S7-300, DIGITAL OUTPUT SM 322, OPTICALLY ISOLATED 16DO, RELAY CONTACTS, 20 PIN	13500	Siemens	Cascade Controls	07374-002
505	1		6ES7 331-7KF02-0AB0	SIMATIC S7-300, ANALOG INPUT SM 331, OPTICALLY ISOLATED, U/I/THERMOCOUPLE/RESISTANCE INTERRUPT, DIAGNOSTICS; RESOLUTION 9/12/14 BITS, 8AI, REMOVE/INSERT W. BACKPLANE BUS, 20 PIN	13500	Siemens	Cascade Controls	07374-002
506	6		6ES7 392-1AJ00-0AA0	SIMATIC S7-300, FRONT CONNECTOR FOR SIGNAL MODULES WITH SCREW CONTACTS, 20-PIN	13500	Siemens	Cascade Controls	07374-002
507	1		6GK7 343-1CX10-0XE0	SIMATIC NET, CP 343-1 LEAN COMMUNICATIONS PROCESSOR F. CONNECTION OF SIMATIC S7-300 W. IND. ETHERNET USING TCP/IP AND UDP, SEND/RECEIVE WITH AND W/O RFC1006, S7 COMMUN., MULTICAST, FETCH/WRITE, DIAGNOSTIC EXPANSIONS, LOADABLE COMMUNICATION BLOCKS, SNMP DIAGNOSTICS, INITIALIZ. USING LAN, 10/100 MBIT, RJ45 PORT FOR LAN	13500	Siemens	Cascade Controls	07374-002
508	1		6ES7 971-1AA00-0AA0	SIMATIC S7, BACKUP BATTERY (LI) 3.6V/0.95AH, FOR FOR S7-300 CPUS AND S5-90U	13500	Siemens	Cascade Controls	07374-002
509	1		3400CL-24G	Ethernet Switch Procurve, Industrial, Managed, 10/100, 8 Port RJ-45	13446	HP	ALLHDD.com	
				FIBER OPTIC PATCH PANEL				
700	1		WAC-2X	Fiber Enclosure; Wall Mount; 4 Panel	13448	CablesPlus USA	CablesPlus USA	
701	4		AP-VAAWC6	Fiber Optic Adapter Panel; 6-Fiber ST; Zirconium Insert; Multimode/Singlemode	13446	CablesPlus USA	CablesPlus USA	
				SPARE PARTS				
503	2		6ES7 321-1FH00-0AA0	SIMATIC S7-300, DIGITAL INPUT SM 321, OPTICALLY ISOLATED 16 DI, 120/230V AC, 20 PIN	13500	Siemens	Cascade Controls	07374-002
504	2		6ES7 322-1HH01-0AA0	SIMATIC S7-300, DIGITAL OUTPUT SM 322, OPTICALLY ISOLATED 16DO, RELAY CONTACTS, 20 PIN	13500	Siemens	Cascade Controls	07374-002
505	2		6ES7 331-7KF02-0AB0	SIMATIC S7-300, ANALOG INPUT SM 331, OPTICALLY ISOLATED, U/I/THERMOCOUPLE/RESISTANCE INTERRUPT, DIAGNOSTICS; RESOLUTION 9/12/14 BITS, 8AI, REMOVE/INSERT W. BACKPLANE BUS, 20 PIN	13500	Siemens	Cascade Controls	07374-002

Vendors List

Manufacturer	Manufacturer Contact Information	Vendor	Vendor Contact Information
Allen-Bradley (Rockwell Automation)	1201 South Second St. Milwaukee, WI 53204-2496 414-382-2000 www.ab.rockwellautomation.com	North Coast Electric Co.	3900 Smith St. Everett, WA 98201 425-259-7263 www.northcoastelectric.com
Anchor Scientific	480 Tamarack Ave Long Lake, MN 55356 952-473-7115 www.anchorscientific.com	Anchor Scientific	480 Tamarack Ave Long Lake, MN 55356 952-473-7115 www.anchorscientific.com
CablesPlus USA	5608 West Marshall Street Richmond, VA 23230 66-678-5852 www.cablesplususa.com	CablesPlus USA	5608 West Marshall Street Richmond, VA 23230 66-678-5852 www.cablesplususa.com
Emerson Network Power (Edco) (Liebert)	100 Emerson Parkway Binghamton, NY 13905 800-288-6169 www.emersonnetworkpower.com	Emerson Network Power	100 Emerson Parkway Binghamton, NY 13905 800-288-6169 www.emersonnetworkpower.com
Federal Signal	1415 West 22nd Street, Suite 1100 Oak Brook, IL 60523 630-954-2000 www.federalsignal.com	Consolidated Electrical Distributors (CED)	6409 So. 194th St. Kent, WA 98032 800-628-9013 www.cednw.com
GE	1055 Mission Court Crown Industrial Estate Fremont, CA 94539 1-800-435-4448 www.gelighting.com	Home Depot	18333 120th Ave NE Bothell, WA 98011 1-800-504-9128 www.homedepot.com
Hewlett-Packard	3000 Hanover St. Palo Alto, CA 94304 800-752-0900 www.hp.com	ALLHDD.com	9229 Queens Blvd., Ste 2F Rego Park, NY 11374 718-766-5269 www.allhdd.com

Manufacturer	Manufacturer Contact Information	Vendor	Vendor Contact Information
Hoffman	2100 Hoffman Way Anoka, MN 55303-1745 763-421-2240 www.hoffmanonline.com	Graybar Electric Co.	2120 37th St. Everett, WA 98201 425-258-9592 www.graybar.com
ISC	4421 Tradition Trail Plano, TX 75093 972-964-2700 www.iscsales.com	ISC Sales, Inc.	4421 Tradition Trail Plano, TX 75093 877-602-0010 www.iscsales.com
Littelfuse	8755 West Higgins Road, Ste 500 Chicago, IL 60631 773-628-1000 www.littelfuse.com	Consolidated Electrical Distributors (CED)	6409 So. 194th St. Kent, WA 98032 800-628-9013 www.cednw.com
McDonnell & Miller (ITT)	8200 N. Austin Ave Morton Grove, IL 60053 847-966-3700 www.completewatersystems.com	Apex Controls	24 Hagerty Blvd., Ste 6 West Chester, PA 19382 610-344-9156 www.apexcontrols.com
Mine Safety Appliances Co. (MSA)	121 Gamma Drive Pittsburgh, PA 15238 412-967-3000 www.msanet.com	CB Engineering	909 7th Ave, Ste 201 Kirkland, WA 98033 425-822-1702 www.cb-pacific.com
Pfannenberg	68 Ward Road Lancaster, NY 14086 716-685-6866 www.pfannenbergusa.com	Consolidated Electrical Distributors (CED)	6409 So. 194th St. Kent, WA 98032 800-628-9013 www.cednw.com
Phoenix Contact	586 Fulling Mill Road Middletown, PA 17057 800-888-7388 www.phoenixcontact.com	Graybar Electric Co.	2120 37th St. Everett, WA 98201 425-258-9592 www.graybar.com
Siemens	One Internet Plaza Johnson City, TN 37604 800-333-7421 www.automation.siemens.com	Cascade Controls (Wesco)	18338 Andover Park West Tukwila, WA 98188 206-357-0304 nw.automation.wesco.com

Manufacturer	Manufacturer Contact Information	Vendor	Vendor Contact Information
Square D (Schneider Electric) (Telemecanique)	1415 Roselle Road Palatine, IL 60067 800-778-2733 www.schneider-electric.com	Graybar Electric Co.	2120 37th St. Everett, WA 98201 425-258-9592 www.graybar.com

Model AFE-1 Air Flow Switch

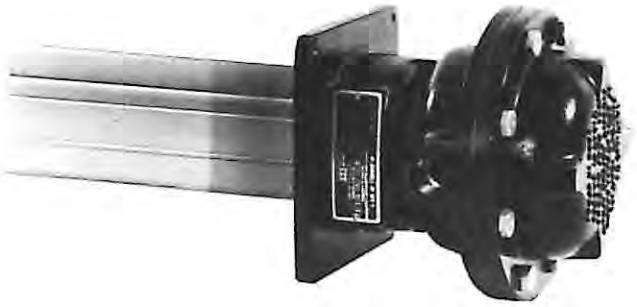

Designed for industrial applications where a hazardous environment atmosphere is present, the AFE-1 Air Flow Switch is hazardous duty listed by Underwriters for use in Class 1 Group C & D and Class 2 Group E, F & G atmospheres.

The AFE-1 responds to medium air flow velocities and switch sensitivity may be readily adjusted to specific rates of flow.

Parts exposed to the inside of the duct are made of brass, steel and aluminum. The switch compartment is isolated from the duct by use of a magnetic proximity switch.

The versatile AFE-1 meets the needs of many applications where the detection of flow or loss of Air Flow must be accomplished in hazardous atmospheres under less-than-ideal conditions.

CAUTION

To prevent ignition of hazardous atmosphere, break circuit before removing cover of control, and keep cover tightly closed when in operation.

FLOW SWITCH ADJUSTMENT

The flow switch is factory adjusted for minimum air flow velocity operation. To obtain a higher air flow velocity operation, loosen lock nut on adjusting screw and rotate adjusting screw clockwise to desired setting and securely tighten lock nut.

IMPORTANT

Use wire suitable for at least 90C operation.

IMPORTANT

After installation and/or adjustment, cycle air flow at least three or four times to insure the control functions properly. It is good operating practice to test the control at least once a year to make sure the control is functioning properly.

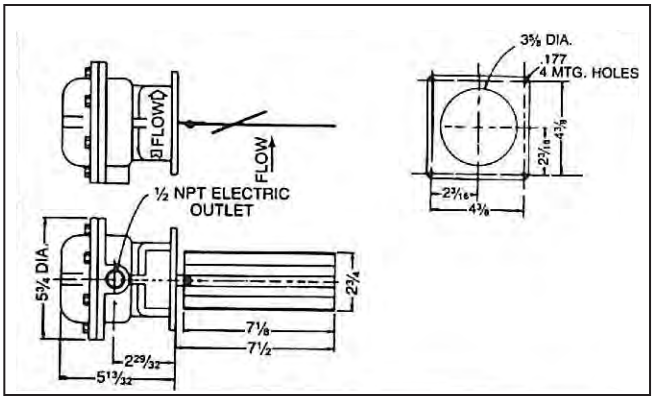

MECHANICAL FEATURES

Easy Wiring-The AFE-1 cast cover is removable allowing access to the wiring terminals.

Convenient Electrical Provisions-A cast boss threaded for a hazardous duty conduit fitting is an integral part of the AFE-1 design.

Switch-The single pole, double throw design provides versatile utility, while magnetic proximity actuation isolates the mechanism from the duct.

Readily Adjustable-Conveniently located external screw provides easy adjustment of actuation at varying flow rates.

Time Delay Available-A time delay is available to prevent actuation by momentary fluctuation in flow rate.

ADJUSTMENT

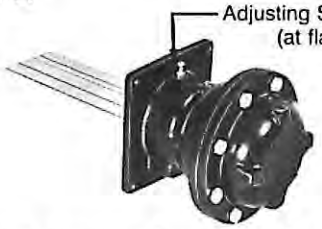

The adjustment screw is factory set for minimum flow velocities. To obtain higher velocities before the switch is actuated, turn adjusting screw in clockwise direction.

LOCATION

The AFE-1 should be installed in a horizontal duct. Avoid installation too close to elbows, dampers, transitions, fans or other sources of excessive turbulence.

AFE-1 should be located about 7 diameters from these sources of turbulence, except 10 diameters from a fan.

Shown on the back are flow rates required to actuate the Air Flow Switch at minimum and maximum adjustments. All switches are shipped from the factory set a minimum adjustment.

IMPORTANT-If the actual flow rate in the duct is only equal to, or *slightly greater* than, the flow rate required to actuate the switch, then the switch should be located about 10 diameters from a fan, or 7 diameters downstream from an elbow or any other cause of turbulence.

INSTALLATION

Installation must be performed by qualified personnel in accordance with all codes and ordinances.

NOTE: Due to the heavier construction of the switch enclosure, the ducts at the mounting site may require reinforcing.

HORIZONTAL DUCT-TOP MOUNTING PREFERRED

Choose a level position on top of duct in accordance with location specification. Scribe a line on the duct at least 6″ long perpendicular to the air flow. Scribe a second line of 90° to the first scribe line so it intersects the position center of the installation of the air flow switch in the duct. Lay the gasket supplied in the carton over the scribed lines and center the 3⅜″ hole in the gasket about the scribed centerline. Using the gasket as a template scribe, the 3⅜″ circle and the four mounting screw holes onto the duct. Cut the 3⅜″ circle from the duct and drill four size #31. (.120″ D) holes through the duct for #8 sheet metal screws. Securely mount control on duct using gasket and screws supplied with air flow direction corresponding to arrow on the control. Check level of control by removing cover and place a level on the machined flange of control housing. Shim mounting as required to bring control level with 3° in all directions.

HORIZONTAL DUCT-SIDE MOUNTING

Choose installation position on duct in accordance with location specifications. Using a level, scribe a vertical line on the side of the duct at least 6″ long. Scribe a second line 90° to the first scribe line so it intersects the position center of the installation of the air flow switch in the duct. Follow the same template scribing, cutting, drilling, mounting and leveling procedure as stated in the top mounting procedure.

ELECTRICAL

Using approved hazardous duty fittings, conduit, and cable, connect and electrically wire the control in accordance with the wiring instructions.

SPECIFICATIONS

PERFORMANCE RANGE OF AFE-1 AIR FLOW SWITCHES

The table below shows the velocity of air flow required to actuate McDonnell AFE-1 Air Flow Switches, in feet per minute (F.P.M.).

FLOW means that the switch will close circuit C-NO, and open circuit C-NC, when the air flow rate is *increased* to the F.P.M. shown. (See schematic switch action "Flow" below.)

NO FLOW means that the switch will open circuit C-NO, and close circuit C-NC, when the air flow rate is *decreased* to the F.P.M. shown. (See schematic action "No Flow" below).

Maximum duct temperature-275° F.
Maximum ambient temperature-120° F.

AIR FLOW VELOCITIES IN FEET PER MINUTE (F.P.M.) REQUIRED TO ACTUATE SWITCH

(Based on standard air 0.075 Pounds Per Cubic Foot)
Maximum air flow velocity-2000 F.P.M.

HORIZONTAL DUCTS

INSTALLED IN HORIZONTAL DUCT		TOP MOUNT (PREFERRED)	SIDE MOUNT
Factory or	FLOW	350 F.P.M.	400 F.P.M.
Minimum Adjustment	NO FLOW	100 F.P.M.	100 F.P.M.
Maximum	FLOW	1900 F.P.M.	1900 F.P.M.
Adjustment	NO FLOW	500 F.P.M.	900 F.P.M.

Flow rates are averages which may vary ±10% from tabulated values.

Minimum Duct Size—8″ high or 8″ wide depending on switch installation.

WIRING INSTRUCTIONS

Schematic of Switch Operation

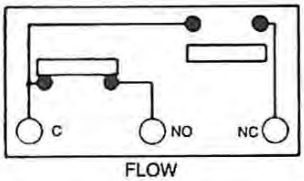

FLOW

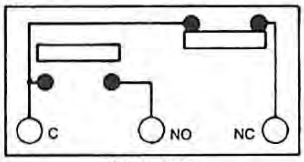

NO FLOW

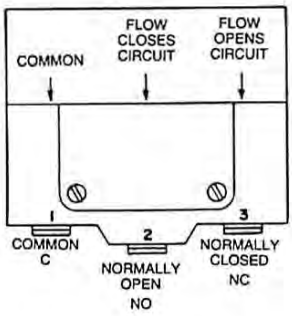

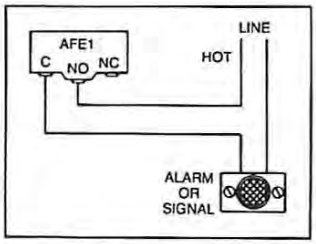

1. Used to sound alarm or light signal when flow occurs

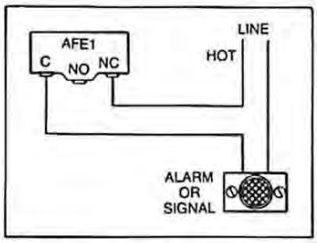

2. Used to sound alarm or light signal when **no-flow** occurs.

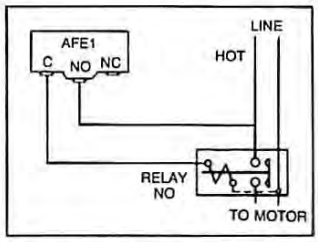

3. Used with single phase circuit—**starts** motor when flow occurs, **stops** motor when no-flow occurs.

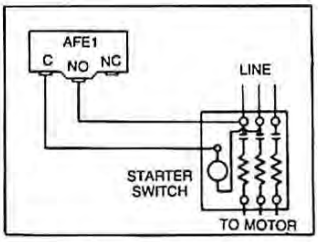

4. Used with three phase circuit—**starts** motor when flow occurs, **stops** motor when no-flow occurs.

UL® 332N

ELECTRICAL RATINGS	AMPERE RATING	
Motor	120 VAC	240 VAC
Full Load	7.4 Amps.	3.7 Amps.
Locked Rotor	44.4 Amps.	22.2 Amps.
	120 V.D.C.	240 V.D.C.
	0.3 Amps.	0.15 Amps.
PILOT DUTY: A.C. 125 V.A., 120-240 V.		
A.C. Non-Inductive Load: 15 Amps. 120 V., 240 V., 277 V.		

USE COPPER WIRE ONLY

xylem
Let's Solve Water

Xylem Inc.
8200 N. Austin Avenue
Morton Grove, Illinois 60053
Phone: (847) 966-3700
Fax: (847) 965-8379
www.xyleminc.com/brands/mcdonnellmiller

McDonnell & Miller is a trademark of Xylem Inc. or one of its subsidiaries.
© 2013 Xylem Inc. SI-AFE-B February 2013 Part No. 246706

ITEM 2

anchor scientific inc.
Box 378, Long Lake, MN 55356
952-473-7115 • FAX 952-473-6002 • www.anchorscientific.com

solo·float

Form 2310-C

DESCRIPTION

The new Solo-Float* is a direct acting float switch for controlling 1 1/2 HP and smaller pump motors. The new Solo-Float has been completely redesigned and uses a metal ball rolling back and forth in a tube to actuate a reliable, snap-action switch. An adjustable, plastic clamp with stainless steel hose clamp is provided for attaching the Solo-Float at the appropriate level on the pump discharge pipe. By varying the tether length, a pumping range of 8" - 14" can be achieved. The Solo-Float is available with a piggyback plug in either a 115 volt or 230 volt configuration. It is also available blunt cut, without a plug, for wiring to an Anchor Scientific JX junction box.

FEATURES

- Reliability
- Adjustable Pumping Range
- Manual Operation
- Non-mercury Element
- Converts Non-automatic Pumps To Automatic
- Replaces Diaphragm Pressure Switches
- Easy Installation
- In Stock, Low Cost

APPLICATIONS

The Solo-Float can be used in a variety of liquid level applications, including sumps, sewage ejectors, septic tanks, vaults and tanks. The corrosion resistance of the materials used in its construction also make the Solo-Float a good choice for many corrosive applications.

SPECIFICATIONS

Cable . . . . . 16-2, SJO W/A, 60º C.
Dia.- .32 65 Strands x #34

Float Housing . . . . . Polypropylene. Dim 5.0" x 3.0" D.
Blue - Normally Open
Red - Normally Closed

Clamp . . . . . Polyethylene Pipe/Cable Clamp, Stainless Steel Hose Clamp. Range: 3/4" - 3"

Electrical Rating . . . . 1/2 HP @ 115V, Single Phase
1 1/2 HP @ 230V, Single Phase
UL 508 Ind. Con. Eq.

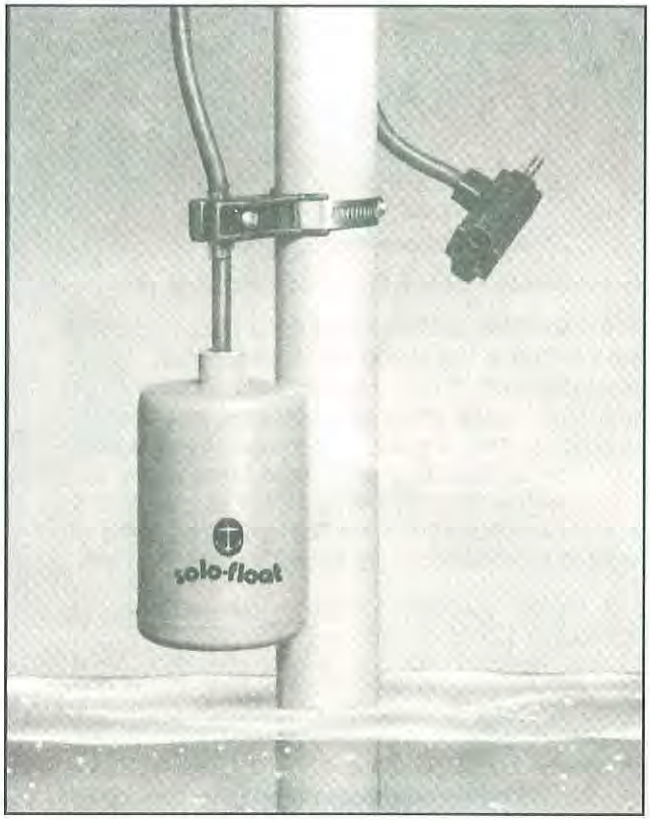

Model D10NO 115

ORDERING INFORMATION

Three variables must be specified when ordering Solo-Floats: 1.) Cable Length 2.) Circuit configuration. 3.) Plug Voltage. Cable lengths are available in 5 foot increments from 10' to 30". Consult factory for longer lengths. The circuit configuration is either 'NO', normally open, (pump down); or 'NC', normally closed, (pump up). The plug voltage also must be specified: '115' for 115 volt or '230' for 230 volt applications.

Example

D	20	NO	115
Model Type	Cable Length	Circuit Config.	Plug Style

Standard Models

D	10	NO	115
	15	NC	230
	20		-(Blunt)
	30		
	50		

TYPICAL INSTALLATION

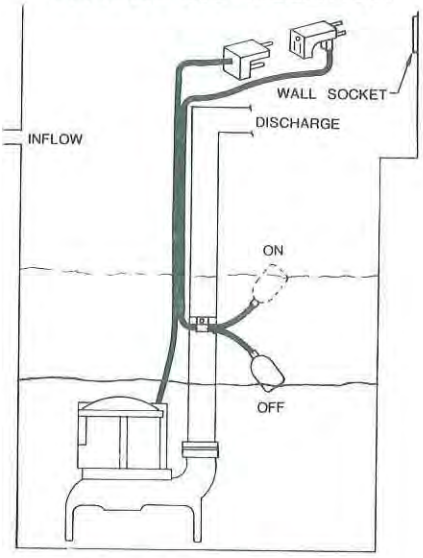

Installation Instructions

1.) NEVER work in the sump with the power on.

2.) The Solo-Float is factory set for a pumping range of 8". If that is the pumping range desired, simply insert the hose clamp through the two slots in the pipe/cable clamp, circle the discharge pipe with the hose clamp, feed the end of the hose clamp through the screw on the other end of the hose clamp and tighten with a slotted screwdriver. It is important to position the Solo-Float on the discharge pipe so that it is unimpeded in its swing from 'on' to 'off'.

3.) If a higher pumping range is desired, refer to Illustration 1 and its instructions.

4.) Plug the Solo-Float into the wall receptacle, then plug the pump into the piggyback plug. Observe several pumping cycles and correct any potential problems. Make certain the pump impeller is still submerged when the Solo-Float turns to the 'off' mode. Also, make certain the Solo-Float housing arrows are aligned as shown in Illustration 1.

ORDERING INFORMATION

MODEL*	Cable Length	Circuit* Config.	Plug Style
D10NO 115	10'	Normally Open	115 Volt
D10NO 230	10'		230 Volt
D10NO –	10'		Blunt
D15NO 115	15	Normally Open	115 Volt
D15NO 230	15		230 Volt
D15NO –	15		Blunt
D20NO 115	20	Normally Open	115 Volt
D20NO 230	20		230 Volt
D20NO –	20		Blunt
D30NO 115	30	Normally Open	115 Volt
D30NO 230	30		230 Volt
D30NO –	30		Blunt

*For Pump up applications, a Normally Closed circuit configuration should be used. Substitute 'NC' for 'NO' when ordering this model.

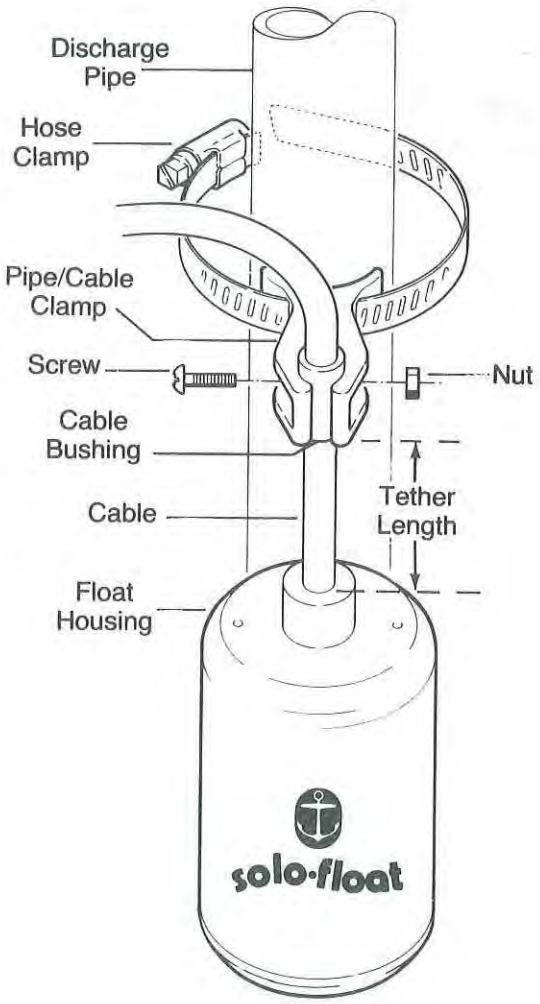

Illustration 1.

Tether Adjustment Instructions

If a higher pumping range is desired, consult Table 1, below for the tether length needed. Loosen the screw on the pipe/cable clamp, measure the cable tether length from the neck of the float housing to the bottom of the pipe/cable clamp. Tighten the screw at the desired tether length and attach to the pipe as described.

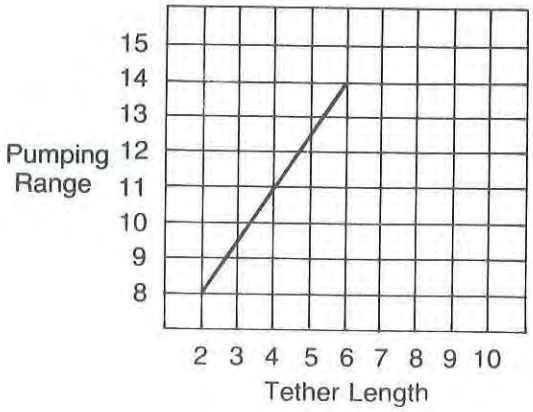

Table 1

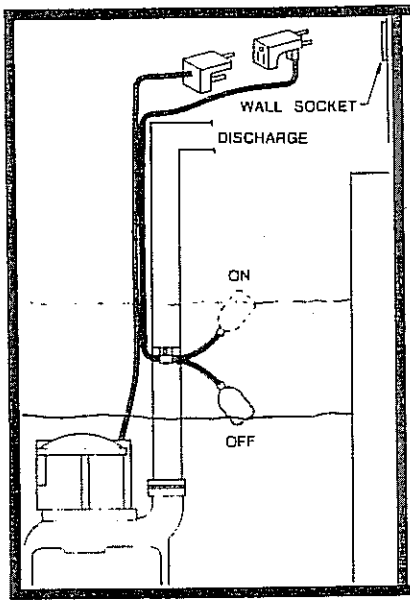

solo·float

D30NO

MODEL Blunt Cut

30'
120V
230V

Normal Open

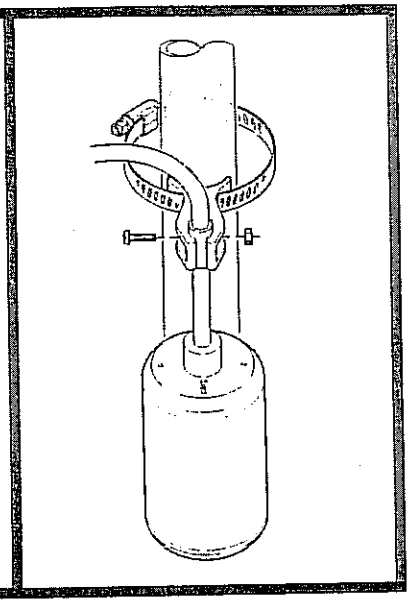

anchor scientific inc.

480 Tamarack Ave. • Long Lake, Minnesota 55356 • (952) 473-7115

ITEM 3

REVISIONS
JUN 24 2008
(1) 10-29-2008 DELETED "D2" AND ADDED "IEC" TO ATO ECO-70000002331A GJT CL
OCT 29 2008

A - ULTIMAX - [ ] - [1] - [2] - [3] - [4] - [5] - [6] - [7] - [8] - [9] - [10] - [11] - [12] - [13]

- **Instrument Type** (1): XP=Exploisimproof; GP=General Purpose
- **Model** (1): E=Display (XP); G=Display (GP)
- **Gas Code** (2): Check Sensor Label
- **Configuration** (3): A=ATEX, Metric (XP); B=ATEX, NPT (XP); C=CSA, NPT (XP); F=FM, NPT (XP); I=IEC, Metric (XP); U=UL, NPT (XP); 0=Non-Euro, NPT (GP); 1=Euro, Metric (GP); 2=Euro, NPT (GP) (1)
- **Sensor Output** (4): 1=2 wire mA; 2=2 wire mA+HART; 3=3 wire mA; 4=3 wire mA+HART
- **Sensor Mounting** (5): S=Integral; D=Remote
- **Relays and LEDs** (6): 0=None; 1=No Relays, with LED's; 2=Relays and LED's
- **Software version** (7): 0=English; S=Spanish; H=Custom Horn
- **110-240 Vac Input - DC Power Supply** (8): 0=None; 1=12VDC Internal; 2=24VDC Internal; 3=12VDC External; 4=24VDC External
- **Gas Sample** (9): 0=None; 1=Flow Cap Assembly
- **Integrated Accessories** (10): 0=None; 1=XP HART port; 2=Pushbutton; 3=Both
- **Installation Hardware** (11): 0=None; 1=Mounting Bracket; 2=Duct Mount Kit; 3=Both
- **Manuals** (12): 0=CD; 1=Hard Copy + CD
- **Custom Options** (13): 0=None; X=Various

CURRENT DRAW FOR XIR UNITS with RELAYS		
Gas Type	DC Voltage Supply	Max Current Draw
IR	8 VDC	870 mA
	12 VDC	550 mA
	24 VDC	290 mA

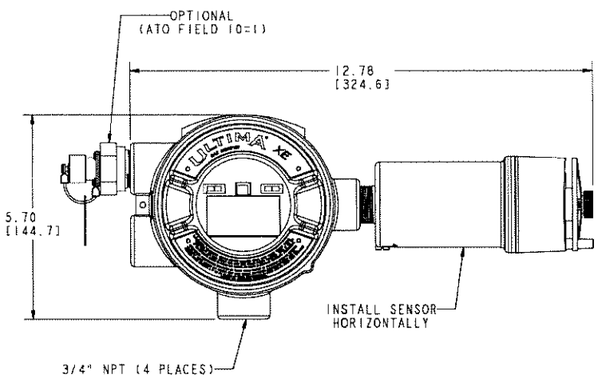

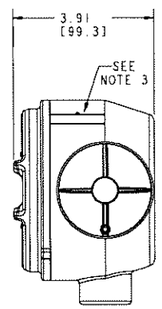

STANDARD
WEIGHT: 10.4 LBS [4.72 kg]

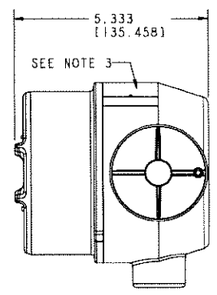

OPTIONAL INTERNAL POWER SUPPLY
WEIGHT: 12 LBS [5.5 kg]

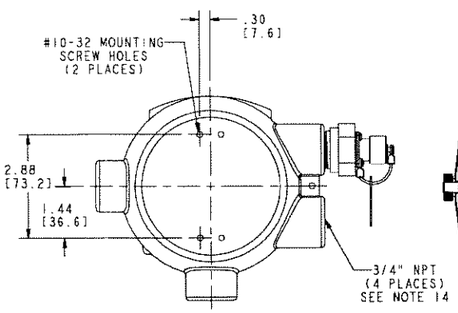

VIEW SHOWN WITH SENSOR REMOVED

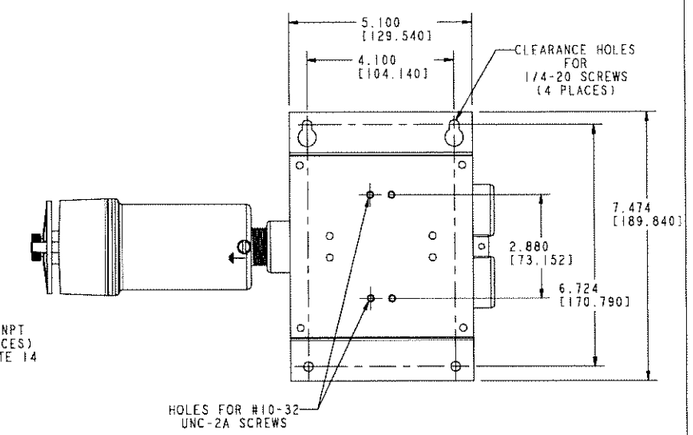

OPTIONAL MOUNTING BRACKET METHOD
(PART NUMBER 10047561)

CABLE LENGTH AND WIRE SIZE FOR UNITS WITHOUT INTERNAL RELAYS				
DC Voltage Supply	Wire Size	Max Cable Length without HART/with HART		Max Load Resistance
		Feet	Meters	
12 VDC	18 AWG	300	91	250 Ohms
	16 AWG	500	152	250 Ohms
	12 AWG	900	274	250 Ohms
24 VDC	18 AWG	2,000	610	500 Ohms
	16 AWG	3,500	1067	500 Ohms
	12 AWG	5,000	1524	500 Ohms

CABLE LENGTH AND WIRE SIZE FOR UNITS WITH INTERNAL RELAYS				
DC Voltage Supply	Wire Size	Max Cable Length		Max Load Resistance
		Feet	Meters	
12 VDC	16 AWG	400	152	250 Ohms
24 VDC	16 AWG	2,500	762	500 Ohms

CONTROL DRAWINGS REFERENCED ON PRODUCT LABELS CAN BE FOUND AT www.msanorthamerica.com FIXED GAS DETECTION, GAS SENSORS, ULTIMA X SERIES GAS MONITORS, LITERATURE TAB

NOTES:
1. INSTRUMENT HOUSING IS MADE OF 316 STAINLESS STEEL.
2. DIMENSIONS SHOWN IN INCHES (MILLIMETERS).
3. CHECK TAG FOR AREA CLASSIFICATION.

(CONTINUED ON SHEET 2)

CUSTOMER _____
P.O. NO. _____
MSA NO. _____
LOCATION _____
TAG NO. _____
TOTAL NO. OF UNITS _____

AUTHORIZED COUNTRY

MSA — MINE SAFETY APPLIANCES CO. PITTSBURGH, PA 15230, USA

MSA STANDARD SHOP PRACTICES APPLY

THIS DRAWING IS THE PROPERTY OF MSA AND IS MADE AVAILABLE TO YOU IN CONFIDENCE AND SUBJECT TO THE FOLLOWING: NO PERMISSION IS GRANTED TO PUBLISH, USE, REPRODUCE, TRANSMIT OR DISCLOSE THIS DRAWING, OR ANY INFORMATION CONTAINED THEREIN TO OTHERS WITHOUT THE PRIOR WRITTEN CONSENT OF MSA EXCEPT FOR THE MANUFACTURE OF ARTICLES FOR MSA SCHUTZVERMERK NACH DIN 34 BEACHTEN. MSA AUER GmbH.

DO NOT SCALE DWG.

CODE SYMBOLS: CRITICAL △; MAJOR A △; MAJOR B △; MINOR (NO MARK); ISO 9 INSPECTION △

TOLERANCES UNLESS OTHERWISE SPECIFIED: FRACTIONAL ± 1/64; 2 PL DEC. ± 0.01; 3 PL DEC. ± 0.005; ANGULAR ± 1 deg. SEE MSA STANDARD SHOP PRACTICES FOR DRILLED HOLE TOLERANCES

JOB NO. 30009701 PROTIB
DRAWN BY GJT DATE 5-12-2008
CHECKED BY S.TURNER 6-20-08
PROJ. ENGR. C.LEHECKA 6-18-08
QUALITY ASSURANCE J.DANNHARDT 6-18-08
MANUFACTURING A.POLOCHAK 6-18-08

APPROVAL AGENCY CODE: YES|NIOSH ATTR. DOC.: .

INSTALLATION OUTLINE, ULTIMA XE WITH XIR SENSOR

CADD REF: SK3015-1026 | SCALE: 0.500

D. | DOCUMENT NO. SK3015-1026 | SHEET 1 OF 3

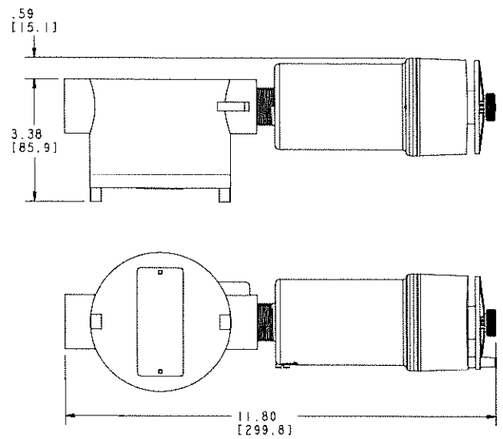

OPTIONAL REMOTE XIR SENSOR UNIT
(ATO Box 5 = D for REMOTE UNIT)

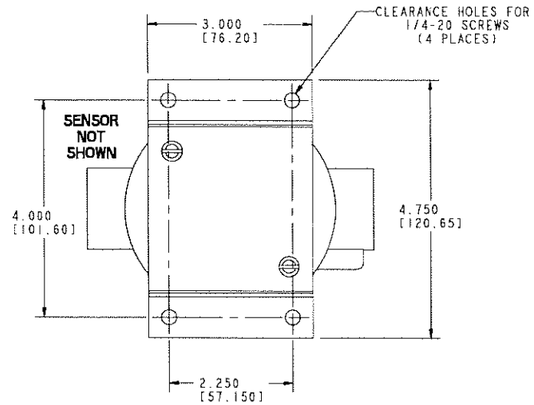

OPTIONAL REMOTE XIR SENSOR MOUNTING BRACKET
(PART NUMBER 10047562)

REMOTE MODULE WIRING AND PLACEMENT Use shielded, 5 conductor wire		
Gas Type	Minimum Wire Size	Maximum Distance
XIR	16 AWG	50 ft.
	12 AWG	100 ft.

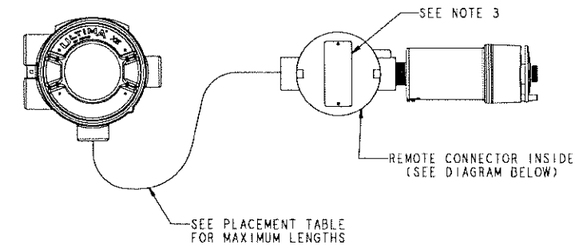

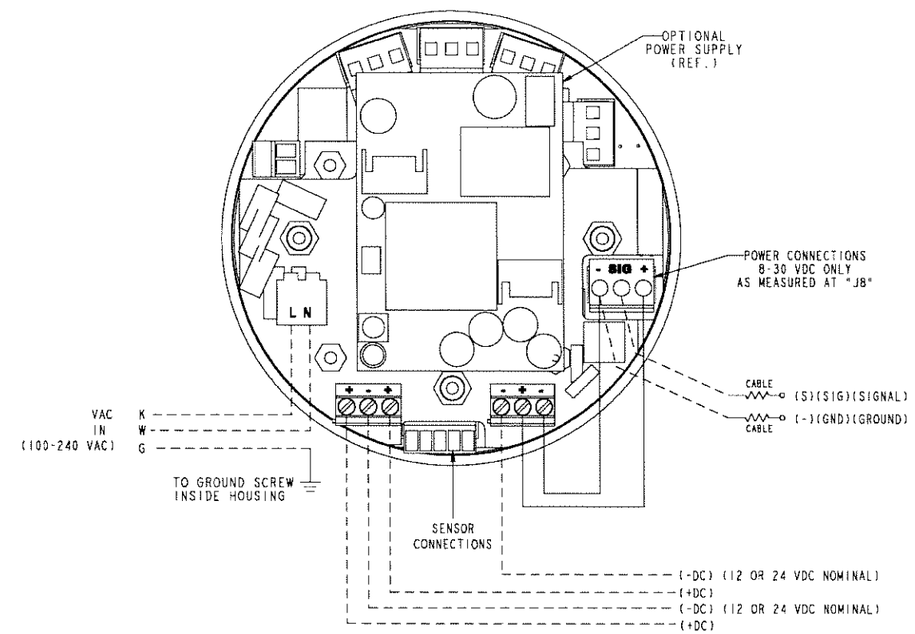

MAIN CIRCUIT BOARD WITH OPTIONAL INTERNAL POWER SUPPLY

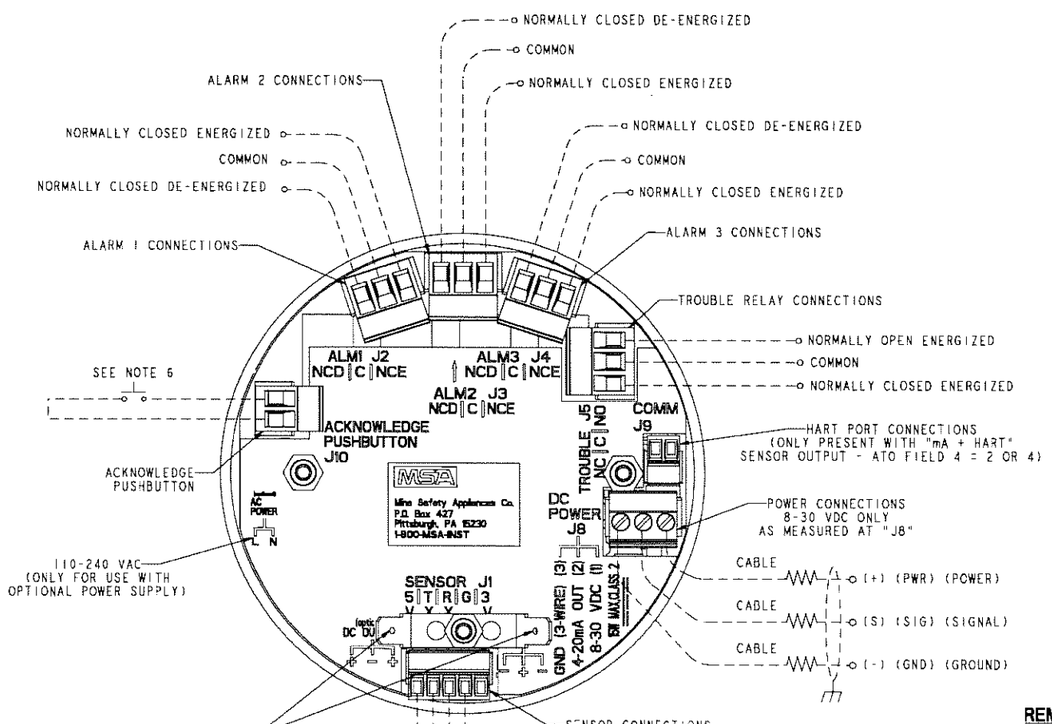

MAIN CIRCUIT BOARD

COLOR CODE			
BLACK	= K	GREEN	= G
BROWN	= N	BLUE	= B
RED	= R	VIOLET	= V
ORANGE	= O	GRAY	= A
YELLOW	= Y	WHITE	= W
PINK	= P	TAN	= T

(CONTINUED FROM SHEET 1)

NOTES:

4. GROUND SHIELD AT POWER SUPPLY AND TERMINATE THROUGH RC NETWORK AT FAR END.
5. - - - - - INDICATES FIELD CONNECTIONS BY OTHERS.
6. CUSTOMER INSTALLED NORMALLY OPEN PUSH BUTTON SWITCH.

(CONTINUED ON SHEET 3)

REVISIONS
JUN 24 2008
REV. 1
OCT 29 2008

AUTHORIZED COUNTRY

MSA — MINE SAFETY APPLIANCES CO. PITTSBURGH, PA 15230, USA

MSA STANDARD SHOP PRACTICES APPLY

THIS DRAWING IS THE PROPERTY OF MSA AND IS MADE AVAILABLE TO YOU IN CONFIDENCE AND SUBJECT TO THE FOLLOWING: NO PERMISSION IS GRANTED TO PUBLISH, USE, REPRODUCE, TRANSMIT OR DISCLOSE THIS DRAWING, OR ANY INFORMATION CONTAINED THEREIN TO OTHERS WITHOUT THE PRIOR WRITTEN CONSENT OF MSA EXCEPT FOR THE MANUFACTURE OF ARTICLES FOR MSA, SCHUTZVERWERK NACH DIN 34 BEACHTEN, MSA AUER GmbH.

DO NOT SCALE DWG.

CODE SYMBOLS
CRITICAL △ MAJOR A △ MAJOR B △ 100 % INSPECTION △ — MINOR (NO MARK)

TOLERANCES UNLESS OTHERWISE SPECIFIED
FRACTIONAL ± 1/64
2 PL DEC. ± 0.01
3 PL DEC. ± 0.005
ANGULAR ± 1 deg.
SEE MSA STANDARD SHOP PRACTICES FOR DRILLED HOLE TOLERANCES

JOB NO. 30009701 PHOTIK
DRAWN BY GJT DATE 5-12-2008
CHECKED BY S.TURNER 6-20-08
PROJ. ENGR. C.LEHECKA 6-18-08
QUALITY ASSURANCE J.DANNHARDT 6-18-08
MANUFACTURING A.POLOCHAK 6-18-08

APPROVAL AGENCY CODE: YES | NIOSH ATTR. DOC.:

INSTALLATION OUTLINE, ULTIMA XE WITH XIR SENSOR

CADD REF: SK3015-1026 | SCALE: 0.625

D | DOCUMENT NO. SK3015-1026 | SHEET 2 OF 3

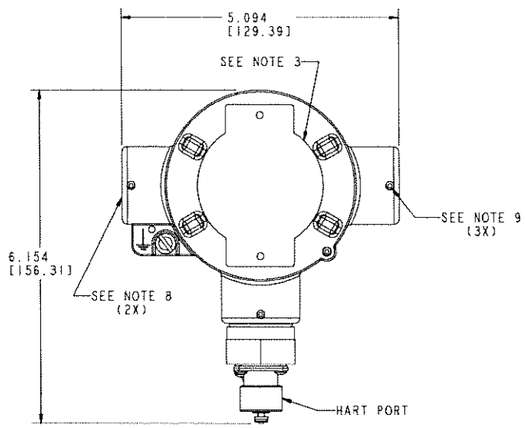

HART MODULE
MATERIAL: CAST 316 STAINLESS STEEL

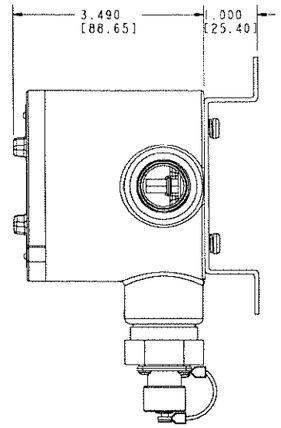

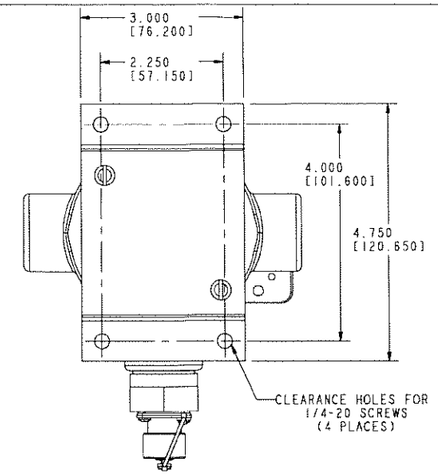

HART MODULE
WITH OPTIONAL MOUNTING BRACKET SHOWN
(P/N 10047562)

HART MODULE ONLY INCLUDED UNDER CERTAIN ATO CONFIGURATIONS

Area Classification	Other Fields	Control Drawing See CD or www.MSAnet.com
Div. 2	Gas Codes: 13, 14, 31-33, 38-39	SK3098-1108
Div. 2	Gas Codes: All other gases except 13, 14, 31-33, 38-39, 51-53, 58-59	SK3098-1072
Div. 1	HART port or HART Module included	SK3098-1057
Div. 1	No XP HART port	No control drawing required

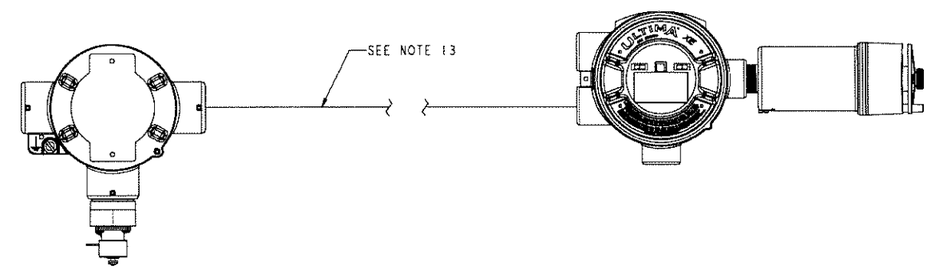

HART MODULE

ULTIMA XIR INSTRUMENT

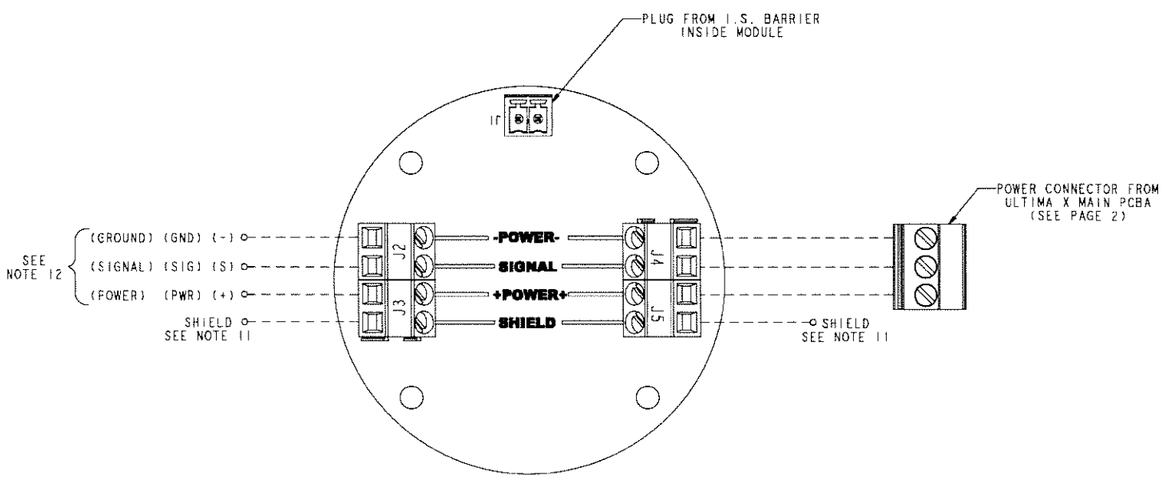

HART MODULE TERMINAL BOARD
SCALE 2.000

(CONTINUED FROM SHEET 2)

NOTES:

8. MODULE PART NUMBER 10090128 HAS 3/4-14 NPT THREADED ENTRIES, MODULE PART NUMBER 10090127 HAS M25 X 1.5 THREADED ENTRIES.
9. M4 SET SCREWS ONLY ON MODULES WITH M25 THREADED ENTRIES.
11. TIE CABLE SHIELD TO ULTIMA X MAIN P.C BOARD ASSEMBLY OR POWER SOURCE SHIELD, NOT BOTH.
12. TWO WIRE UNITS: ONLY USE POWER AND SIGNAL CONNECTIONS
13. SEE CABLE LENGTH TABLES ON SHEET 1.
14. CERTIFIED STOPPING PLUGS OR CERTIFIED ENTRIES SHALL BE INSTALLED AT ALL THREADED ENTRIES AT INSTALLATION.

REVISIONS
JUN 24 2008
REV. 1
OCT 29 2008

AUTHORIZED COUNTRY

MSA
MINE SAFETY APPLIANCES CO.
PITTSBURGH, PA 15230, USA

MSA STANDARD SHOP PRACTICES APPLY

THIS DRAWING IS THE PROPERTY OF MSA AND IS MADE AVAILABLE TO YOU IN CONFIDENCE AND SUBJECT TO THE FOLLOWING: NO PERMISSION IS GRANTED TO PUBLISH, USE, REPRODUCE, TRANSMIT OR DISCLOSE THIS DRAWING, OR ANY INFORMATION CONTAINED THEREIN TO OTHERS WITHOUT THE PRIOR WRITTEN CONSENT OF MSA EXCEPT FOR THE MANUFACTURE OF ARTICLES FOR MSA. SCHUTZVERMERK NACH DIN 34 BEACH'EN. MSA AUER GmbH.

DO NOT SCALE DWG.

CODE SYMBOLS
CRITICAL △
MAJOR A △ MINOR (NO MARK)
MAJOR B △
100 % INSPECTION △

TOLERANCES UNLESS OTHERWISE SPECIFIED
FRACTIONAL ± 1/64
2 PL DEC. ± 0.01
3 PL DEC. ± 0.005
ANGULAR ± 1 deg.
SEE MSA STANDARD SHOP PRACTICES FOR DRILLED HOLE TOLERANCES

JOB NO. 30009701 PM3718
DRAWN BY GJT DATE 5-12-2008
CHECKED BY S.TURNER 6-20-08
PROJ. ENGR. C.LEHECKA 6-18-08
QUALITY ASSURANCE J.DANNHARDT 6-18-08
MANUFACTURING A.POLOCHAK 6-18-08

APPROVAL AGENCY CODE: YES | NIOSH ATTR. DOC.:

INSTALLATION OUTLINE, ULTIMA XE WITH XIR SENSOR

CADD REF: SK3015-1026
SCALE: 1.000

D.
SK3015-1026
SHEET 3 OF 3

Ultima® XIR Gas Monitor Quick Start-Up Guide

The Safety Company

ITEM 3

⚠ WARNING

This Guide is not a substitute for the manual contained in the Product Literature CD. The Ultima X Series Gas Monitor Manual must be carefully read by all individuals who have or will have the responsibility for using or servicing the product. Failure to follow this warning can result in serious personal injury or loss of life.

1. Remove the lid and the electronics from the enclosure (FIGURE 1).
2. Mount the enclosure in the desired location and run wiring to the enclosure per instructions on the enclosed Installation Outline Drawing. The XIR sensor should be mounted horizontally as shown in FIGURE 1.
3. Connect 8 to 30 VDC power lead to J8-1 (FIGURE 2).
4. Connect the signal ground wire to J8-3.
5. Connect J8-2 to the 4 - 20 mA input on remote system.
6. Connect the sensor module to J-1 on the main pc board.
7. Wire for optional acknowledge push-button (J10) and/or optional relays (FIGURE 3).
8. Connect the optional HART barrier to J9 (FIGURE 3).
9. Assemble the electronics assembly and the lid on the enclosure.
10. Apply power and observe the LCD as all segments light, software version displays, and a 30-second (self-check) countdown occurs.
11. After 30-second countdown, observe that the gas type and gas concentration alternately display. (For units with LEDs, green LED is ON and red LED is OFF).
12. Perform a gas check to ensure proper operation.

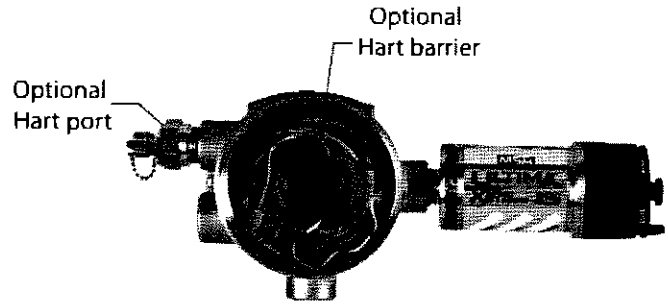

Figure 1

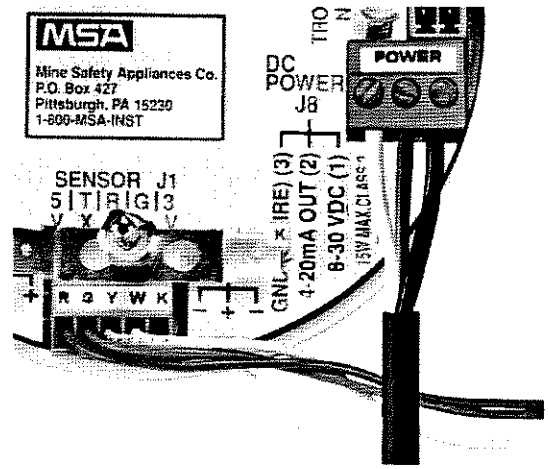

Figure 2

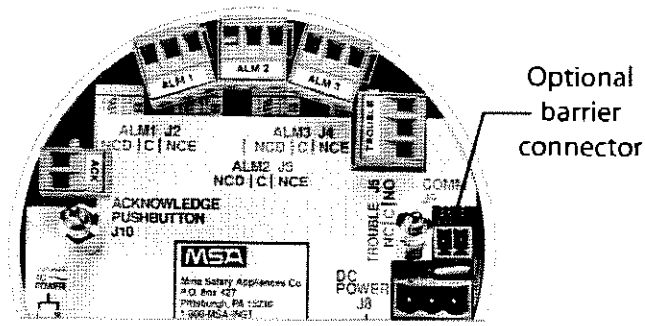

Figure 3

© MINE SAFETY APPLIANCES COMPANY 2008

ITEM 3

Ultima® X Series Gas Monitors

Instruction Manual

In North America, to contact your nearest stocking location, dial toll-free 1-800-MSA-INST.
To contact MSA International, dial 1-412-967-3354.
Inquiries can also be e-mailed to customer.service@msanet.com.

© MINE SAFETY APPLIANCES COMPANY 2009 - All Rights Reserved

This manual is available on the internet at www.msanet.com

Manufactured by

MSA NORTH AMERICA

P.O. Box 427, Pittsburgh, Pennsylvania 15230

(L) -Y Rev 6 10036101

⚠ WARNING

THIS MANUAL MUST BE CAREFULLY READ BY ALL INDIVIDUALS WHO HAVE OR WILL HAVE THE RESPONSIBILITY FOR USING OR SERVICING THE PRODUCT. Like any piece of complex equipment, this instrument will perform as designed only if it is used and serviced in accordance with the manufacturer's instructions. OTHERWISE, IT COULD FAIL TO PERFORM AS DESIGNED AND PERSONS WHO RELY ON THIS PRODUCT FOR THEIR SAFETY COULD SUSTAIN SEVERE PERSONAL INJURY OR LOSS OF LIFE.

The warranties made by Mine Safety Appliances Company with respect to the product are voided if the product is not used and serviced in accordance with the instructions in this manual. Please protect yourself and others by following them. We encourage our customers to write or call regarding this equipment prior to use or for any additional information relative to use or service.

MSA Instrument Warranty

1. **Warranty-** Seller warrants that this product will be free from mechanical defect or faulty workmanship for the following periods:
   - Gas Monitor: eighteen (18) months from date of shipment or one (1) year from installation, whichever occurs first
   - Oxygen, Toxic or Catalytic Combustible Sensor: eighteen (18) months from date of shipment or one (1) year from installation, whichever occurs first
   - IR Sensor source: ten (10) years from date of shipment.
     All other IR components: two (2) years from date of shipment.

   This warranty is applicable provided the product is maintained and used in accordance with Seller's instructions and/or recommendations. This warranty does not apply to expendable or consumable parts whose normal life expectancy is less than one (1) year. The Seller shall be released from all obligations under this warranty in the event repairs or modifications are made by persons other than its own or authorized service personnel or if the warranty claim results from physical abuse or misuse of the product. No agent, employee or representative of the Seller has any authority to bind the Seller to any affirmation, representation or warranty concerning the goods sold under this contract. Seller makes no warranty concerning components or accessories not manufactured by the Seller, but will pass on to the Purchaser all warranties of manufacturers of such components. **THIS WARRANTY IS IN LIEU OF ALL OTHER WARRANTIES, EXPRESSED, IMPLIED OR STATUTORY, AND IS STRICTLY LIMITED TO THE TERMS HEREOF. SELLER SPECIFICALLY DISCLAIMS ANY WARRANTY OF MERCHANTABILITY OR OF FITNESS FOR A PARTICULAR PURPOSE.**

2. **Exclusive Remedy-** It is expressly agreed that Purchaser's sole and exclusive remedy for breach of the above warranty, for any tortious conduct of Seller, or for any other cause of action, shall be the repair and/or replacement at Seller's option, of any equipment or parts thereof, which after examination by Seller is proven to be defective. Replacement equipment and/or parts will be provided at no cost to Purchaser, F.O.B. Seller's Plant. Failure of Seller to successfully repair any nonconforming product shall not cause the remedy established hereby to fail of its essential purpose.
3. **Exclusion of Consequential Damage-** Purchaser specifically understands and agrees that under no circumstances will seller be liable to purchaser for economic, special, incidental or consequential damages or losses of any kind whatsoever, including but not limited to, loss of anticipated profits and any other loss caused by reason of nonoperation of the goods. This exclusion is applicable to claims for breach of warranty, tortious conduct or any other cause of action against seller.

General Warnings and Cautions

⚠ WARNING

1. The Ultima X Series Gas Monitors described in this manual must be installed, operated and maintained in strict accordance with their labels, cautions, warnings, instructions, and within the limitations stated. Verify that the class, group, and temperature ratings of the equipment agree with the actual classification of the location.
2. The Ultima X Series Gas Monitor is designed to detect gases or vapors in air. It cannot measure the concentration of gases or vapors in steam or inert or oxygen-deficient atmospheres. The oxygen sensor can measure oxygen-deficient atmospheres.
3. Electrochemical sensors are sealed units which contain a corrosive electrolyte. Should a sensor develop leakage, it must be immediately removed from service; then, remove it from the sensing head and discard it properly. Caution must be exercised so that the electrolyte does not contact skin, eyes, clothing or circuitry; otherwise, serious personal injury (burns) and/or equipment damage may result.
4. Use only genuine MSA replacement parts when performing any maintenance procedures provided in this manual. Failure to do so may seriously impair instrument performance. Repair or alteration of the Ultima X Series Gas Monitor, beyond the scope of these maintenance instructions or by anyone other than an authorized

MSA service personnel, could cause the product to fail to perform as designed and persons who rely on this product for their safety could sustain serious personal injury or loss of life.

5. Do not locate the general-purpose enclosure models in an area which may contain a flammable mixture of gas and air; otherwise, an explosion may occur. The general-purpose Ultima X Series Gas Monitors can be a source of ignition and must not be mounted in an area where a flammable mixture of combustible gas and air may become present; otherwise, an explosion may occur. If such a location must be monitored, use an explosion-proof Ultima X Series Gas Monitor model.
6. The Ultima XIR Infrared combustible gas monitor detects the presence of most combustible gases by identifying the difference in the amount of infrared light energy absorbed during the presence of these gases. This monitor, however, does NOT detect the presence of hydrogen gas and must never be used to monitor for hydrogen gas.
7. The standard Ultima XIR Infrared Combustible Gas Monitor does not detect the presence of acetylene gas and the presence of acetylene gas will degrade sensor performance. Custom-built acetylene sensors are available through your MSA representative.
8. Gas detectors depend on an unimpeded gas flow for proper operation. In environments where contamination is possible, ensure that the flow remains unobstructed at the sensor. Failure to follow this may prevent gas detection and generate inaccurate readings.
9. CSA performance Certification to standard C22.2 No. 152 is valid only when the instrument is calibrated on methane per the instruction manual.
10. Install Product in accordance with all markings and the regulations of the country in use.
11. Product components may have different hazardous location ratings. Ensure all components are suitable for the area of installation and protection technique.

Failure to follow the above can result in serious personal injury or loss of life.

⚠ CAUTION

1. As with all gas monitors of these types, high levels of, or long exposure to, certain compounds in the tested atmosphere could contaminate the sensors. In atmospheres where an Ultima X Series Gas Monitor may be exposed to such materials, calibration must be performed frequently to ensure that operation is dependable and display indications are accurate.
2. The Ultima X Series Gas Monitor must not be painted. If painting is done in an area where a Monitor is located, care must be exercised to ensure that paint is not deposited on the sintered, metal flashback arrestor in the inlet fitting of the Ultima X Series Gas Monitor, if so equipped. Such paint deposits would interfere with the diffusion process, whereby a sample of the atmosphere being monitored diffuses into the Monitor.
3. The only absolute method to ensure proper overall operation of an Ultima X Series Monitor is to check it with a known concentration of the gas for which it has been calibrated. Consequently, calibration checks must be included as part of the routine inspection of the system.
4. Protect the Ultima X Series Gas Monitor from extreme vibration. Do not mount the sensing head in direct sunlight as this may cause overheating of the sensor.

Failure to follow the above can result in injury, product damage and/or an unsafe condition.

Table of Contents

Chapter 1,
Installation 1-1

General Description 1-1
Identifying Your Unit 1-1
Installing Your Gas Monitor 1-5
    Installing the Ultima XA Gas Monitor 1-6
    Installing the Ultima XE Gas Monitor 1-6
    Installing the Ultima XIR Gas Monitor 1-8
Electrical Connections for Ultima X Gas Monitors 1-9
    Wiring for all Models 1-10
Use of External Controllers 1-12
Identify PCB Configuration 1-13
Installing the Ultima X Remote Sensor Module 1-20
Electrical Connections for Remote Sensors 1-21

Chapter 2,
Start-up and Calibration 2-1

Initial Start-up 2-1
Calibration Basics 2-4
    Ultima Calibrator 2-6
    Ultima Controller 2-6
    Calibration Output Signal 2-6
    Calibration Kit 2-7
Ultima X Series Gas Monitor Calibration Procedure 2-7
    Equipment Required 2-8
    Span Gas Values 2-9
    INITIAL Calibration 2-12
    Standard Calibration 2-13
    OXYGEN Calibration 2-18
    XIR Calibration 2-18

Chapter 3,
Specifications 3-1

Chapter 4, Maintenance 4-1
General 4-1
Ultima XIR Cleaning Procedure 4-4
Replacing an Ultima XE or Ultima XA Sensor 4-5
Obtaining Replacement Parts 4-8

Appendix A,
Optional Features A-1
1) Internal Relays A-1
General Information A-1
Unpacking, Mounting and Wiring A-1
Ultima X Series Gas Monitor Internal Relays A-2
Relay Specifications A-2
Alarm Relays A-3
Fault Relay or Trouble A-4
Relay Connections A-5
2) Optional RESET Push-button A-7
General A-7
RESET Button Selection A-7
Optional Push-button Calibration A-8
3) Optional Horn Relay Software A-9
To Activate the Horn Relay A-9
To Reset the Horn Relay A-9

Appendix B,
Calibration Guide for Additional XIR/XI Gases .B-1

Appendix C,
General Certification Information C-1

Appendix D, HART Specific Information D-1

HART Field Device Specification D-1
Host Interface D-2
Status Information D-3
Extended Device Status D-3
Universal Commands D-5
Common-Practice Commands D-5
Burst Mode D-6
Catch Device Variable D-6
Command #129: Read Sensor Gas Type D-7
Command #130: Read Device Real Time Clock D-7
Command #131: Read Alarm Setpoints D-8
Command #132: Read Alarm Control Actions D-9
Command #133: Read Min, Max, Avg Values D-9
Command #134: Read Last Cal Date D-10
Command #135: Read Gas Table D-10
Command #136: Read Input Voltage Value D-10
Command #137: Read Auto Zero Comp Value D-11
Command #139: Read Sensor Status message D-11
Command #140: Read Swap Delay Status D-11
Command #141: Read Cal Signal Status D-12
Command #142: Read Alert Option Status D-12
Command #143: Read Sensor Temperature D-13
Command #144: Read Relay Normal State D-13
Command #173: Write RTC D-14
Command #174: Write Alarm Setpoints D-15
Command #175: Write Alarm Setpoint Control Actions D-16
Command #176: Write Average Interval D-17
Command #177: Write Upper Trim Point D-18
Command #178: Write Gas Table D-19
Command #179: Write Sensor Data Sheet Reset Control D-20
Command #180: Write Sensor Swap Delay Enable .D-21
Command #181: Write Cal Signal Enable D-22
Command #182: Write Calibration Mode D-23
Command #183: Write Calibration Abort D-24
Command #184: Write Calibration Step D-25

Command #185: Write Alarm Acknowledge D-26
Command #186: Write Protect Mode D-27
Command #187: Write Alert Option D-28
Command #188: Write Relay Normal State D-29
Performance D-32
Power-Up D-32
Reset D-32
Self-Test D-32
Busy and Delayed-Response D-33
Long Messages D-33
Non-Volatile Memory D-33
Modes D-34
Write Protection D-34
Damping D-34
Capability Checklist D-34
Default Configuration D-35
Calibration Using a HART® Communicator D-35
Sensor Zero Selection Menu D-35
Standard Zero/Span Calibration Selection Menu . . .D-37
Initial Calibration Procedures D-40
User Calibration Selection Menu D-40
Troubleshooting D-54
Span Fault D-54
Zero Fault D-57

List of Figures

Figure 1-1. General-Purpose Ultima XA Monitor 1-1
Figure 1-2. -Proof Ultima XE Monitor 1-2
Figure 1-3. Explosion-Proof Ultima XIR Monitor 1-2
Figure 1-4. General-Purpose XA Remote Sensor Module . . .1-3
Figure 1-5. Explosion-Proof XE Remote Sensor Module 1-3
Figure 1-6. Explosion-Proof XIR Remote Sensor Module . . .1-4
Figure 1-7. Ultima XE and XIR Mounting Bracket 1-7
Figure 1-8. Ultima XIR 1-8
Figure 1-9. Ultima XE Grounding Terminals 1-9
Figure 1-10. General-Purpose Two-Wire Operation 1-14
Figure 1-11. Explosion-Proof Two-Wire Operation 1-14
Figure 1-12. General-Purpose Three-Wire Operation 1-15
Figure 1-13. Explosion-Proof Three-Wire Operation 1-15

Figure 1-14. Two-Wire Printed Circuit Board
(no HART Protocol) 1-16
Figure 1-15. Two-Wire Printed Circuit Board
(with HART Protocol) 1-17
Figure 1-16. Three-Wire Printed Circuit Board
(no HART Protocol) 1-18
Figure 1-17. Three-Wire Printed Circuit Board
(with HART Protocol) 1-19
Figure 1-18. Remote Module General-Purpose
Ultima X Series Wiring 1-20
Figure 1-19. Remote Module Explosion-Proof
Ultima X Series Wiring 1-20
Figure 2-1. LCD Gas Concentration Display 2-1
Figure 2-2. Ultima Calibrator 2-5
Figure 2-3. Ultima Controller 2-5
Figure 2-4. Ultima X Optional Push-button Calibrator 2-5
Figure 2-5. Apply ZERO Gas Flag 2-14
Figure 2-6. Apply SPAN Gas Flag 2-15
Figure 2-7. Calibration End Display 2-17
Figure 4-1. "Change Sensor" Scrolls Across the Display 4-6
Figure 4-2. Sensor Assembly and Sensor Guard
for General-Purpose Model 4-7
Figure A-1. Relay Contacts A-4
Figure A-2. Relay Printed Circuit Board A-6
Figure D-1. Zero cal step screen D-41
Figure D-2. Span cal step screen D-41
Figure D-3. Select Sensor Calibration
from the Sensor Trim Menu D-42
Figure D-4. First Warning screen D-43
Figure D-5. Second Warning screen D-44
Figure D-6. Standard Calibration function select screen . . .D-45
Figure D-7. Calibration initiated screen D-46
Figure D-8. Selection Confirmation screen D-47
Figure D-9. Sensor Zero Countdown screen D-48
Figure D-10. Zero Adjustment screen D-49
Figure D-11. Span Countdown screen D-50
Figure D-12. Adjusting Span screen D-51
Figure D-13. Calibration Completion message D-52
Figure D-14. Calibration Gas Reminder screen D-53
Figure D-15. Loop Control Reminder message D-54

Figure D-16. Calibration Status screen D-55
Figure D-17. Sensor Trim Point screen D-56
Figure D-18. Additional Sensor Status screen D-57
Figure D-19. Device Status screen D-58

List of Tables

Table 1-1. Installation Outline Drawing List 1-10
Table 1-2. Cable Length and Wire Size for Units without Internal Relays 1-11
Table 1-3. Installation Outline Drawings for Ultima X Power Supplies 1-12
Table 1-4. Remote Module Wiring and Placement 1-22
Table 1-5. Remote Sensor Wiring Cable 1-22
Table 1-6. Low Temperature Wiring Cable 1-22
Table 2-1. Instrument Operation 2-2
Table 2-2. Factory-set Span Values 2-9
Table 2-3. Calibration Guide for Combustible Gas Sensor . .2-11
Table 3-1. Performance Specifications 3-1
Table 3-2. Sensor Response to Interferants 3-4
Table 4-1. Operational Display Messages 4-1
Table 4-2. Configuration Display Messages 4-2
Table 4-3. Troubleshooting Guidelines 4-2
Table 4-4. Replacement Parts 4-8
Table A-1. Power Cable Distances for the Ultima X Series Gas Monitor with Internal Relays A-2
Table A-2. Relay Specifications A-2
Table A-3. Push-button Calibration A-8
Table D-1. Device Identification D-1
Table D-2. Current Values D-2
Table D-3. Device Variables Exposed by the Ultima Monitor .D-3
Table D-4. Dynamic Variable implemented by Ultima Monitor D-3
Table D-5. Additional Device Status (Command #48) D-4
Table D-6. Supported Commands D-6
Table D-7. Device-Specific Commands D-7
Table D-8. Gas Type Descriptions D-30
Table D-9. Alarm Control Actions D-30
Table D-10. Gas Table Values D-30
Table D-11. Calibration Modes D-31
Table D-12. Sensor Status Codes D-31

Table D-13. Sampling Rates D-32
Table D-14. Command Response Times D-33
Table D-15. Capability Checklist D-34
Table D-16. Default Configuration D-35

Chapter 1, Installation

General Description

The Ultima X Series Gas Monitor is designed to sample the environment where mounted and alert you to potentially dangerous levels of your target gas, depending on your particular model. The Ultima X Series device uses various detection methods, depending on the gas of interest. Detection methods can be electrochemical, infrared, pellement or other technologies. The Ultima XE Gas Monitor is an explosion-proof device suitable for installation in hazardous locations. The Ultima XA Gas Monitor is a general-purpose version in a plastic enclosure for use in nonexplosive atmospheres only. The Ultima X Gas Monitor can be ordered with the standard 4 to 20 mA analog output or with an optional HART (Highway Addressable Remote Transducer) protocol, which is superimposed on the 4 to 20 mA signal. The unit is factory-calibrated and shipped ready for installation.

The main sensor input is provided via a five-terminal interface that provides a digital interface for 3 VDC or 5 VDC sensor modules. Many different sensor modules are available, providing sensing capability for a large variety of gases. The operating range varies with the type of cell (e.g., electrochemical, pellistor or infrared combustible, etc.).

Identifying Your Unit

The Ultima XA Gas Monitor is housed in a rugged, plastic general-purpose enclosure (FIGURE 1-1).

Figure 1-1. General-Purpose Ultima XA Monitor

The Ultima XE Gas Monitor is housed in a 316 stainless steel explosion-proof enclosure (FIGURE 1-2 shows the Ultima XE with the optional explosion-proof HART port).

Figure 1-2. Explosion-Proof Ultima XE Monitor

The Ultima XIR Gas Monitor is housed in a 316 stainless steel explosion-proof enclosure (FIGURE 1-3).

Figure 1-3. Explosion-Proof Ultima XIR Monitor

If your application requires the sensor head to be located separately from the control unit, all models are available with Remote Sensor Modules (shown in FIGURES 1-4, 1-5 and 1-6).

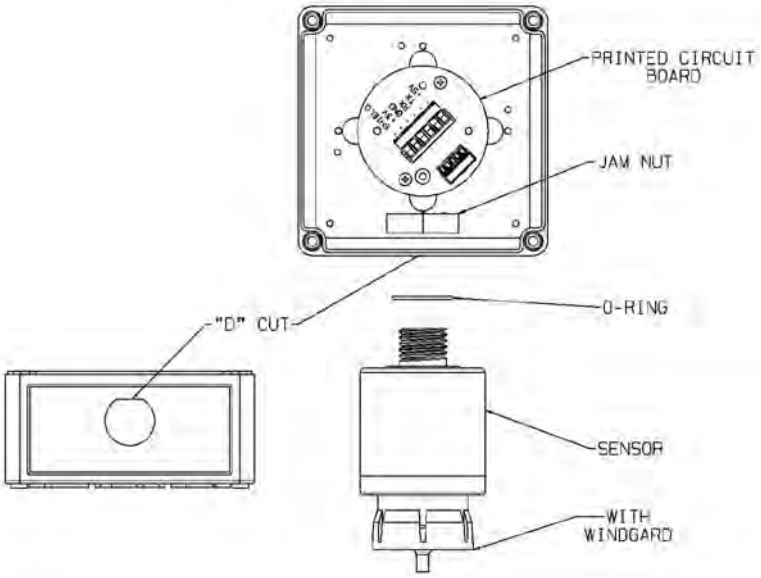

Figure 1-4. General-Purpose XA Remote Sensor Module

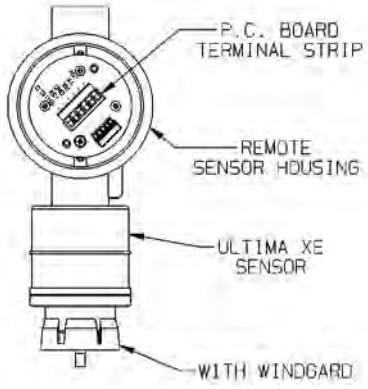

Figure 1-5. Explosion-Proof XE Remote Sensor Module

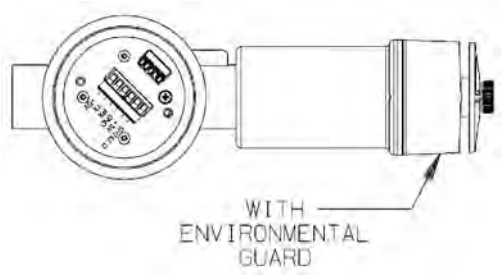

Figure 1-6. Explosion-Proof XIR Remote Sensor Module

To determine your sensor type and options, check the shipping carton. Checked items are included in the carton. The carton label identifies:

- Type of unit supplied (Gas Monitor, Gas Monitor Less Sensor, or Remote Sensor Module)
- Type of gas (combustible gas, toxic gas or oxygen)
- Range [% LEL, PPM (parts per million), or %]
- Output (2- or 3-wire, 4 to 20 mA, or 4 to 20 mA with HART)
- Any options such as internal relays and/or LEDs.
    - If your unit contains internal relays, see Appendix A.

Also check the sensor ID label located on the inside of the sensor. This can be viewed by unscrewing the lower portion of the sensor. If performing this while the unit is powered, see the following Warning. The sensor ID label identifies the detectable gas and the gas range.

⚠ WARNING

For Ultima XE sensors marked Class I, Groups A, B, C and D and not used in Class II areas, unscrew sensor cap at least three full turns (but no more than four full turns from its tightly-closed position), wait 10 seconds, and then remove cap completely. Failure to follow this warning can result in the ignition of a hazardous atmosphere.

For the Ultima XE Sensor marked Class II Groups F and G, atmosphere must be free of dust and the power removed from the unit before the sensor cap can be removed from the housing. Failure to follow this warning can result in the ignition of a hazardous atmosphere.

Your Ultima XE Series Gas Monitor may also include a separate HART Module if you ordered the following optional accessories:

1). Internal Power Supply and explosion-proof HART Port

2). External RESET Push-button and explosion-proof HART Port.

Installing Your Gas Monitor

NOTE: Reference installation outline drawings listed in TABLE 1-1.

Generally, the Ultima X Series Gas Monitors or remote sensing module should be mounted close to the area where a leak is likely to occur or where the gas is expected. Install the Ultima X Series Gas Monitors or the remote sensing module at a high level (ceiling) or low level (floor), depending on the density of the gas most likely to be found. Install the unit so that the front display of the unit is not blocked or hidden from view.

⚠ CAUTION

Mount the Ultima XE or XA Gas Monitor or remote sensing module with the sensor inlet fitting (FIGURE 1-1, 1-2, 1-4 or 1-5) pointed downward; otherwise, the inlet may become clogged with particulate matter or liquids.

Mount the Ultima XIR Gas Monitor or XIR Remote Sensing Module with the sensor inlet fitting extended horizontally from the main enclosure (FIGURE 1-3 and 1-6) to prevent the build-up of particulate or liquid matter on the monitor's optical surfaces.

Do not paint the Ultima X Series Gas Monitors. If painting is done in an area where a sensor is located, exercise CAUTION to ensure paint is not deposited on the sensor inlet fitting. Such paint deposits would interfere with the diffusion process, whereby a sample of the monitored atmosphere diffuses into the sensor. In addition, solvents in the paint may cause an alarm condition to occur.

Protect the Ultima X Series Gas Monitors from extreme vibration. Do not mount sensing head in direct sunlight as this may cause overheating of the sensor.

⚠ WARNING

Do not locate the general-purpose enclosure models in an area which may contain a flammable mixture of gas and air; otherwise, an explosion may occur. The general-purpose Ultima X Series Gas Monitors can be a source of ignition and must not be mounted in an area where a flammable mixture of combustible gas and air may become present; otherwise, an explosion may occur. If such a location must be monitored, use an explosion-proof gas monitor.

Installing the Ultima XA Gas Monitor

Remove lid and drill enclosure for power, signal and optional relay cable entry. Use one of the following methods to mount the general-purpose Ultima XA Gas Monitor/Less Sensor or the Ultima XA Gas Monitor.

- Using customer-installed wiring holes, install the Ultima XA Gas Monitor to the end of rigid conduit.
- Use mounting holes in the corners of the Ultima XA enclosure to mount directly to a wall.
- Use mounting holes in the corners of the Ultima XA enclosure to mount to the optional Mounting Kit (P/N 10047561); see FIGURE 1-7.
- The Ultima XA gas sensor is not shipped attached to the main enclosure. Ensure the sensor wiring harness is through the entry and the sensor is pointed downward.

Installing the Ultima XE Gas Monitor

- The optional Mounting Bracket Kit (P/N 10047561) can be attached to the rear holes of the Ultima XE Gas Monitor (FIGURE 1-7).
- The Ultima XE Gas Monitor main enclosure can be rotated 360° and mounted to ensure easy access to any of the four entryways. The electronics assembly inside the metal enclosure can be repositioned in any of the four self-aligning interior holes to ensure the display is properly oriented.
- The Ultima XE Gas Monitor sensor is not shipped attached to the main enclosure. Ensure the sensor wiring harness is through the entry and the sensor is pointing downward. Tighten with a strap wrench.

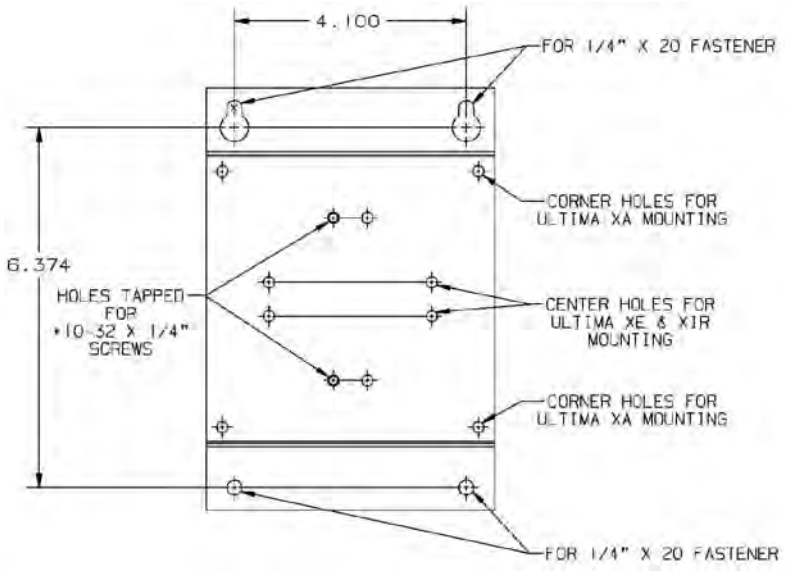

Figure 1-7. Ultima XE and XIR Mounting Bracket

Installing the Ultima XIR Gas Monitor

⚠ WARNING

The Ultima XIR Gas Monitor contains no user- or field-serviceable parts and must be returned to the factory for repair. Any attempt to open the monitor will damage the unit and void the warranty.

⚠ CAUTION

Under no circumstances should a wrench or pry-bar be applied to the two legs that support the unit's reflectors during installation or removal of the sensor (FIGURE 1-8). Applying force to the legs can permanently damage the monitor.

It is recommended that the monitor's environmental guard be installed on the unit at all times. If the monitor is to be operated without the guard, frequent checks should be made to ensure particulate or liquid matter has not collected on the windows.

- The optional Mounting Bracket (P/N 10047561) can be attached to the rear holes of the Ultima XE Gas Monitor (FIGURE 1-7).
- The Ultima XIR Gas Sensor is factory-installed on the stainless steel gas monitor. The Ultima XIR Monitor must be installed with the XIR sensor in a horizontal position (see FIGURE 1-3) to prevent the build-up of particulate or liquid matter on the monitor optical surface.
- The Ultima XIR Gas Sensor is intended for use only on metal enclosures.

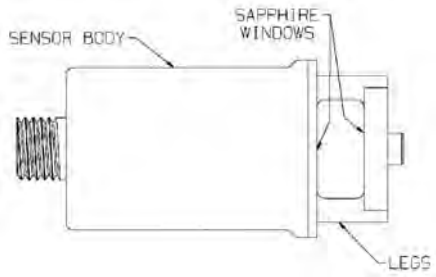

Figure 1-8. Ultima XIR

Electrical Connections for Ultima X Gas Monitors

⚠ WARNING

Before wiring the Ultima X Series Gas Monitors, disconnect power source supplying the monitor; otherwise, electrical shock or ignition of hazardous atmospheres could occur.

For Ultima XE and XIR installations, the internal grounding terminal (located on the interior bottom of the Ultima XE main enclosure) must be used for equipment grounding. The external grounding terminal is only to be used as a supplemental bonding connection where local authorities permit or require such a connection. See FIGURE 1-9 for location of grounding terminals.

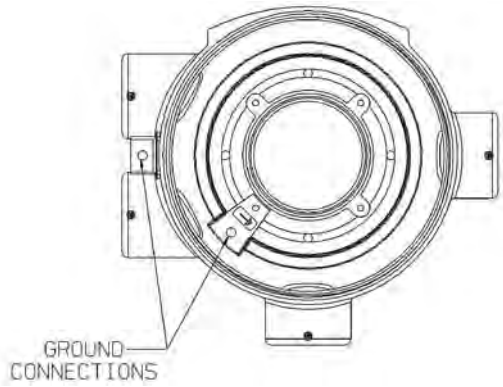

Figure 1-9. Ultima XE Grounding Terminals

NOTE: For Ultima X Series units with internal relays, see Appendix A.

This assembly is marked to identify power, ground and signal connections.

- A two-wire connection is possible for certain:
  - Toxic Gas models
  - Oxygen models
- A three-wire connection is required for all:
  - Combustible Gas models
  - Toxic and Oxygen models with internal relays.

Wiring for all Models

Install wiring in accordance with the electrical code of the country in use and UL 61010-A1 or CSA C22.2 No. 1010.1, as applicable. In these installations, twisted-pair, instrument quality cable is recommended. Shielded cable is recommended for cable runs where interferences from radio frequency interference (RFI), electromagnetic interference (EMI) or other noise sources exist (such as motors, welding equipment, heaters, etc.).

NOTE: See Installation Outline Drawings for wiring details as specified in TABLE 1-1.

Table 1-1. Installation Outline Drawing List

MODEL	TYPE	DOCUMENT NO.
Ultima XA	Gas Monitor	SK3015-1027
Ultima XE	Gas Monitor	SK3015-1025
Ultima XIR	Gas Monitor	SK3015-1026

Conduit may also be needed in areas where large amounts of electrical noise is expected.

Use caution when selecting a cable size. TABLE 1-2 expresses the maximum cable length when only using the Ultima X Series Gas Monitors. Ultima X Series options may take additional power which requires a heavier cable or a short cable run. Cable distances for units with internal relays are specified in Appendix A, TABLE A-1.

When selecting cable size, consider future needs (i.e., addition of sensors and/or options available with the Ultima X Series Gas Monitors). See Chapter 3, TABLE 3-1, "Performance Specifications" for proper input voltage.

Ensure that water and dirt are not able to enter the unit via the wire or conduit. If the unit is installed in a location known to be wet or damp, it is good practice to loop or bend the entry into the unit that prevents water incursion.

All cable shields should be terminated to earth ground at one end only.

Table 1-2. Cable Length and Wire Size for Units Without Internal Relays

GAS TYPE	SENSOR OUTPUT	DC VOLTAGE SUPPLY	WIRE SIZE (AWG)	MAXIMUM CABLE LENGTH WITHOUT HART (FEET)	(METERS)	MAXIMUM LOAD RESISTANCE (OHMS)
Oxygen or Toxic	2 Wire	12 VDC	22	4000 900(w/HART)	1219 274 (w/HART)	100 50 (w/HART)
		24 VDC	22	7,000	2134	500
Oxygen or Toxic	3 Wire	24 VDC	22	10,000	3048	500
Combustible	3 Wire	12 VDC	18	900	274	250
			16	1,400	427	250
			12	3,600	1097	250
Combustible	3 Wire	24 VDC	18	2,500	762	500
			16	4,200	1280	500
			12	10,000	3048	500
XIR	3 wire	12 VDC	18	300	91	250
			16	500	152	250
			12	900	274	250
XIR	3 wire	24 VDC	18	2,000	610	500
			16	3,500	1067	500
			12	5,000	1524	500

An external power supply is required to supply 8-30 VDC to the Ultima X Series Gas Monitor (For power requirements, see Chapter 3, "Specifications"). All connections should be made by following appropriate wire code procedures.

For proper installation of an AC power supply used with an Ultima X Series transmitter, refer to the following drawings for detailed information. Optional 12 VDC or 24 VDC internal and external power supplies can be ordered with the Ultima X Series Gas Monitors.

Table 1-3. Installation Outline Drawings for Ultima X Power Supplies

MODEL	POWER SUPPLY	POWER SUPPLY OUTPUT VOLTAGE	POWER SPECIFICATION	INSTALLATION OUTLINE DRAWING NUMBER
XA	External	12 VDC	1.25 Amps, 15 W	10000020129
	External	24 VDC	0.46 Amps, 11 W	10000020127
	Internal	12 or 24 VDC	see above	SK3015-1027
XE	External	12 VDC	1.25 Amps, 15 W	10000020130
	External	24 VDC	0.46 Amps, 11 W	10000020128
	Internal	12 or 24 VDC	see above	SK3015-1025 (XE) or SK3015-1026 (XIR)

Use of External Controllers

The Ultima X Series Gas Monitors may be connected to any device capable of accepting 4-20 mA analog signals, such as:

- Suprema Controller
- Model 9010/9020 Controller
- GasGard family controllers
- Quad Gas Controller
- Programmable Controllers
- DCS's, etc.

⚠ WARNING

When using any of the the Ultima X Series accessories (such as relays) with the 4 to 20 mA output Ultima X Series Gas Monitor, a three-wire connection must be used. Failure to use a three-wire connection could damage the electronics within the Ultima X Series Gas Monitor which can result in serious personal injury or loss of life.

Be sure to install your Ultima X Series Gas Monitor according to National Electrical and local procedural codes. Failure to do so can result in an unsafe condition.

Identify PCB Configuration

- Identify the main pc board as a two-wire or a three-wire unit:
  - **For XA Gas Monitors:**

    while looking at the main pc board, locate the identifying label on the underside of the lid:
    - A-ULTX-PCB-A-1 is a two-wire unit, 4-20 mA output
    - A-ULTX-PCB-A-2 is a two-wire unit with HART protocol on the 4-20 mA output
    - A-ULTX-PCB-A-3 is a three-wire unit, 4-20 mA output
    - A-ULTX-PCB-A-4 is a three-wire unit with HART protocol on the 4-20 mA output
  - **For XE and XIR Gas Monitors:**

    locate the identifying label on the side of the plastic shroud for the main pc board:
    - A-ULTX-PCB-E-1 is a two-wire unit, 4-20 mA output
    - A-ULTX-PCB-E-2 is a two-wire unit with HART protocol on the 4-20 mA output
    - A-ULTX-PCB-E-3 is a three-wire unit, 4-20 mA output
    - A-ULTX-PCB-E-4 is a three-wire unit with HART protocol on the 4-20 mA output.

- Two-wire 4 to 20 mA Ultima X Series Monitors operate in the current loop mode (FIGURE 1-10 for general-purpose) (FIGURE1-11 for explosion-proof).

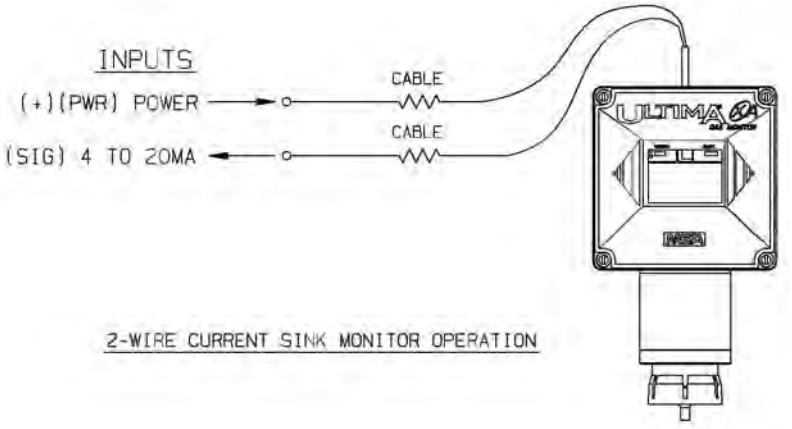

Figure 1-10. General-Purpose Two-Wire Operation

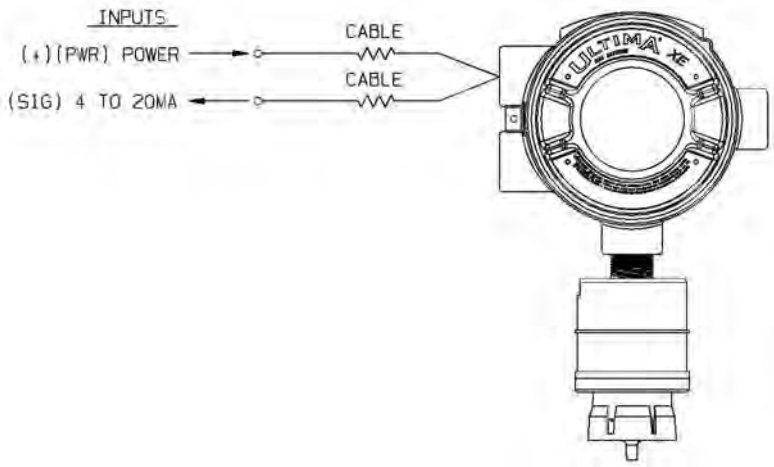

Figure 1-11. Explosion-Proof Two-Wire Operation

- Three-wire Ultima X Series Monitors operate in the current source mode (see FIGURE 1-12 for general-purpose) (FIGURE 1-13 for explosion-proof).

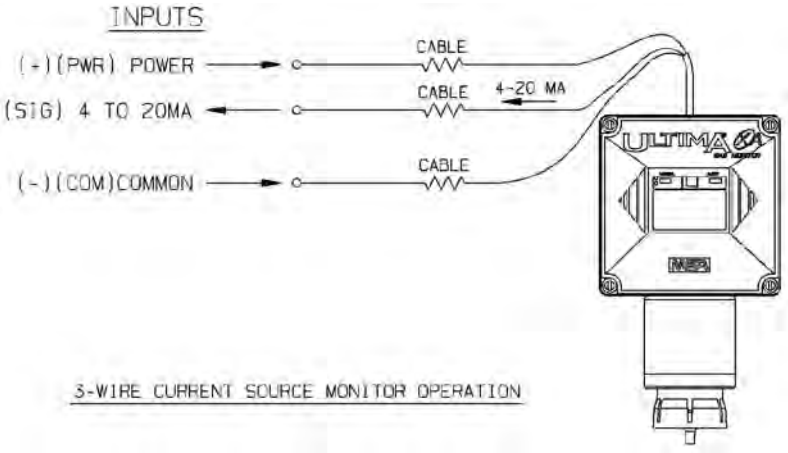

Figure 1-12. General-Purpose Three-Wire Operation

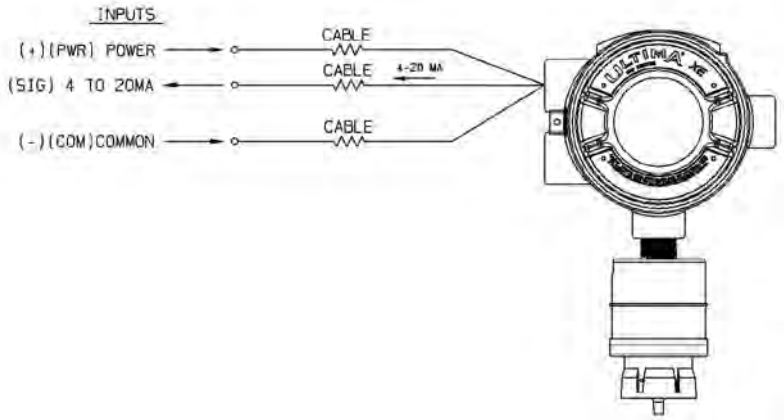

Figure 1-13. Explosion-Proof Three-Wire Operation

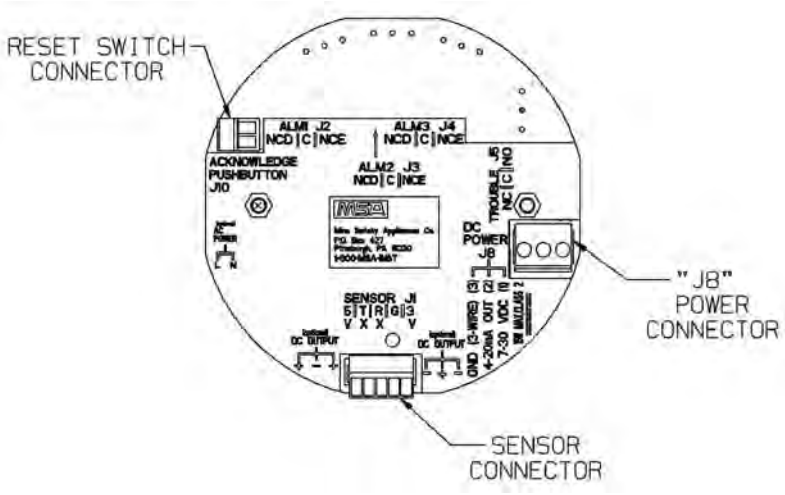

Figure 1-14. Two-Wire Printed Circuit Board (no HART Protocol)

Installation of Two-Wire, 4-20 mA Output (no HART Protocol)

1. Connect 8-30 VDC power lead to J8-1 (see FIGURE 1-14)
2. Connect J8-2 to the 4-20 mA output on the remote system.
3. Connect the sensor module to main pc board connector J-1.
4. Assemble lid on the enclosure.

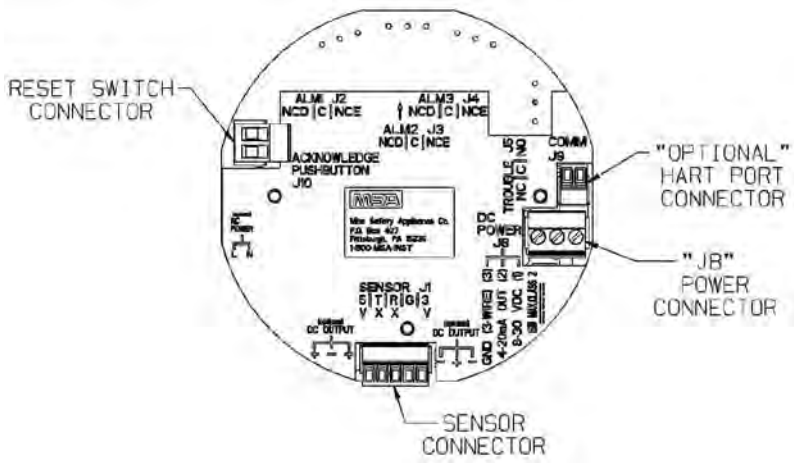

Figure 1-15. Two-Wire Printed Circuit Board (with HART Protocol)

Installation of Two-Wire, 4-20 mA Output with HART Protocol

1. Connect 12-30 VDC power lead to J8-1 (see FIGURE 1-15).

   NOTE: The HART signal is not available below 12 VDC on the two-wire pc board.

2. Connect J8-2 to the 4-20 mA input on the remote system.
3. Terminate the 4-20 mA line with 230-500 Ohms of resistance.
4. Connect sensor module to main pc board connector J-1.
5. Assemble lid on the enclosure.

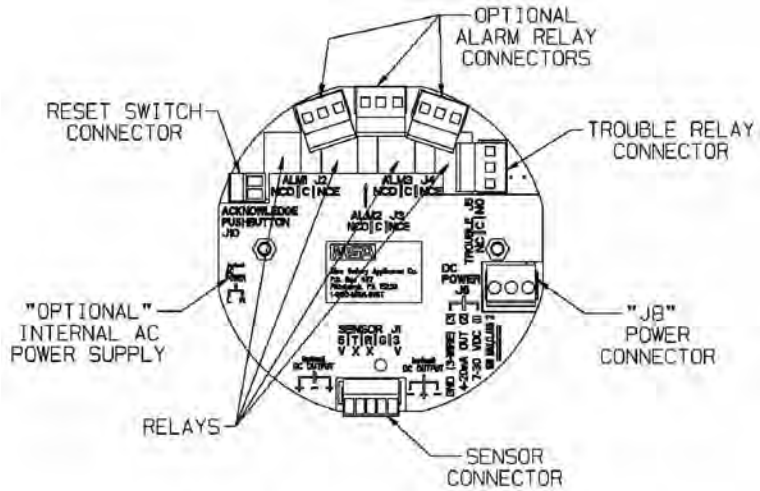

Figure 1-16. Three-Wire Printed Circuit Board (no HART Protocol)

Installation of Three-Wire, 4-20 mA Output (no HART Protocol)

1. Connect 8-30 VDC power lead to J8-1 (see FIGURE 1-16)
2. Connect J8-2 to the 4-20 mA output on the remote system.
3. For three-wire operation, connect the signal ground to J8-3.
4. Connect the sensor module to main pc board connector J-1.
5. Wire for optional relays, if applicable (see Appendix A).
6. Assemble lid on the enclosure.

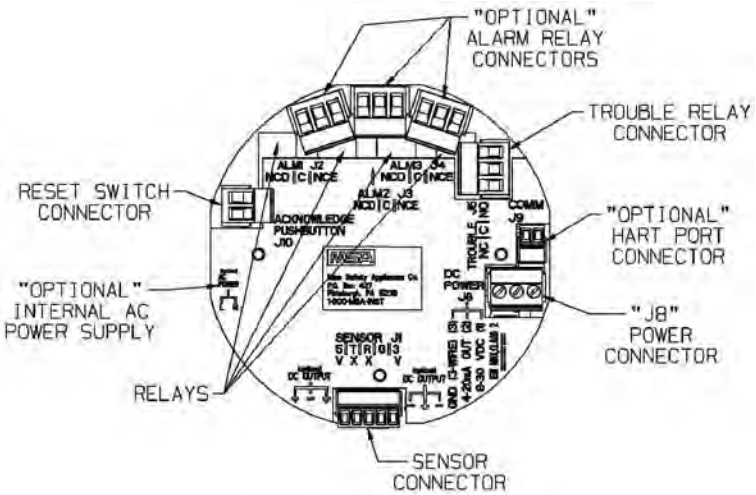

Figure 1-17. Three-Wire Printed Circuit Board (with HART Protocol)

Installation of Three-Wire, 4-20 mA Output with HART Protocol

1. Connect 8-30 VDC power lead to J8-1 (see FIGURE 1-17)
2. Connect J8-2 to the 4-20 mA input on the remote system.
3. Terminate the 4-20 mA line with 230-500 Ohms of resistance.
4. For three-wire operation, connect the signal ground to J8-3.
5. Connect the sensor module to main pc board connector J-1.
6. Wire for optional relays, if applicable (see Appendix A).
7. Assemble lid on the enclosure.

Installing the Ultima X Remote Sensor Module

The Remote Sensor Module is used with the Ultima X Gas Monitor for installations requiring remote placement of the gas sensor.

FIGURES 1-18 and 1-19 show the general-purpose and explosion-proof configurations.

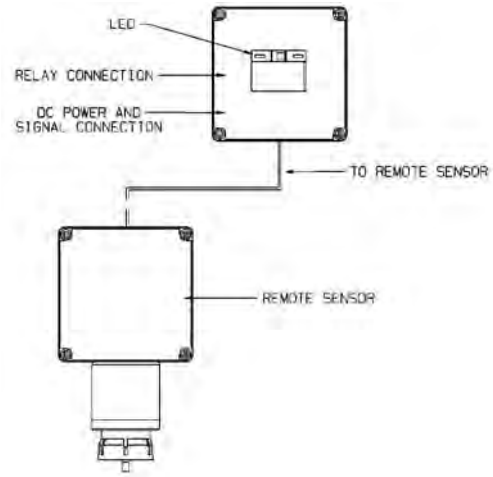

Figure 1-18. Remote Module General-Purpose Ultima X Series Wiring

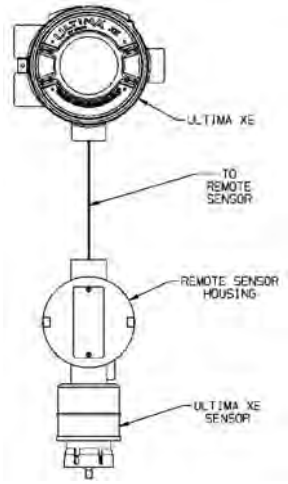

Figure 1-19. Remote Module Explosion-Proof Ultima X Series Wiring

The Remote Sensor Module should be mounted in a manner similar to the Ultima X (see Chapter 1, "Installing Your Gas Monitor") and at a maximum distance outlined in TABLE 1-6.

Permanently connect 1/4" ID tubing to the post on the windguard. Route this tubing to the Ultima X Gas Monitor, ensuring that there are no kinks, leaks or other obstructions. Secure this tubing near the monitor; it is used to deliver check gas to the sensor module during calibration.

Electrical Connections for Remote Sensors

⚠ WARNING

Before wiring the Ultima X Series Remote Sensor Module, disconnect the power source feeding the Remote Sensor Module and the Ultima X Series Gas Monitor/Less Sensor; otherwise, electrical shock or ignition of hazardous atmospheres could occur.

⚠ WARNING

When installing an Ultima X Series Remote Sensor Module with its mating Ultima X Series Gas Monitor/Less Sensor, follow National Electrical and local procedural Codes; failure to do so can result in an unsafe condition.

Five conductors are required for the Ultima XE and Ultima XA Remote Sensor Modules. Four conductors are required for the Ultima XIR Remote Sensor Module. The Ultima X Series Monitor has a five-wire terminal to accommodate up to #16 AWG conductors. For wiring details, see the applicable Installation Outline Drawing listed in TABLE 1-1.

Some installations require metal pipe or metallic conduit. In these cases, separate conductors or unshielded cable may be used.

For open wiring, shielded wire or cable should be used to minimize the possibility of noise interference and contact with other voltages. Selection of this shielded cable must comply with local requirements.

Table 1-4. Remote Module Wiring and Placement

GAS TYPE	MINIMUM WIRE SIZE	MAXIMUM DISTANCE
Toxic and Oxygen	20 AWG	100 feet (30m)
Catalytic Combustible	18 AWG 16 AWG	50 feet (15 m) 100 feet (30 m)
*IR Combustible	16 AWG 12 AWG	50 feet (15 m) 100 fee (30 m)

TABLES 1-7 and 1-8 show suggested cables for Ultima X Series installations; other cables are available which are also adequate.

Table 1-5. Remote Sensor Wiring Cable

SUPPLIER	CATALOG NUMBER	DESCRIPTION
Alpha Wire Corp	5525	5 cond., shielded, 18 AWG
	5535	5 cond., shielded, 16 AWG
	5514	4 cond., shielded, 20 AWG

Table 1-6. Low Temperature Wiring Cable

SUPPLIER	CATALOG NUMBER	DESCRIPTION
Alpha Wire Corp	45525	5 cond., shielded, 18 AWG
	45366	6 cond., shielded, 16 AWG
	45545	5 cond., shielded, 14 AWG

At the Ultima X Series Remote Sensor Location:

1. Open the Ultima X Series Remote Sensor cover by removing lid.
2. For the Ultima XA Gas Monitor, route the power and signal cable from the Gas Monitor through a customer-created opening in the enclosure and wire it to the appropriately labeled connection on the terminal block (FIGURE 1-4).

   For the Ultima XE or XIR Gas Monitor, route the cable from the Gas Monitor through a wire entry hole in the enclosure and wire it to the appropriately labeled connection on the terminal block (FIGURE 1-5).
3. Verify the sensor connector is firmly seated on the terminal board.
4. Re-install the cover of the Ultima X Series Remote Sensor.

NOTES:

Grounding

- Incoming power and signal cable shield should be earth grounded at the power source.
- Connect power and remote sensor cable shields to shield terminals on main pc board.
- Provide shield terminations inside the sensor housing as indicated on Installation Outline Drawings for Remote Sensor. See TABLE 1-1 for Installation Outline Drawing document numbers.

Cable Size

- Cables larger than #16 AWG will require a splice of smaller cable to fit the connector.

Chapter 2,
Start-up and Calibration

Initial Start-up

- The Ultima X Series Gas Monitors are factory-calibrated and ready for immediate use.
- Once power is applied to the unit, the LCD shows a test of all display words. The software version number displays; then, a 30-second (self-check) countdown for sensor stability begins.
- During the 30-second countdown, the output signal is the same as the calibration signal when enabled during a normal calibration. This is described later in this chapter under "Ultima X Series Gas Monitor Calibration Output Signal".
- For units with LEDs, the Alert red LED will be solid ON during the 30-second countdown.
- After the 30-second countdown, observe that the gas type and gas concentration (ppm, % Gas, or % LEL) alternately flash (FIGURE 2-1).
- For units with LEDs, the Normal green LED will be solid ON after the 30-second countdown.
- A complete listing of instrument operation features can be found in TABLE 2-1.

During normal operation, the Ultima X Monitor displays the gas concentration of the surrounding environment. The corresponding output signal can be transmitted to a controller or read directly from the optional HART port with an HCF-approved communicator (such as the Emerson 375 HART Communicator, or equivalent).

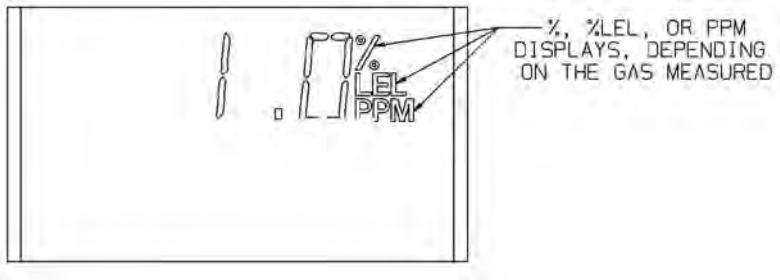

Figure 2-1. LCD Gas Concentration Display

NOTE: The catalytic combustible model of the Ultima X Series Gas Monitors is capable of detecting concentrations of certain combustible gases above 100% LEL. When exposed to these concentrations, the Ultima X Series Gas Monitors will display one of two modes:

- **+LOC % LEL -** The Ultima X Series Gas Monitor has been exposed to a high concentration of gas (above the LEL) and it is possible that the over-range condition may still exist.
- **OVER % LEL -** The Ultima X Series Gas Monitor has been exposed to a high concentration of gas (above the LEL) and the over-range condition definitely still exists.

⚠ CAUTION

In either mode, correct the condition causing the excessive gas level and vent or purge the area before attempting the following.

In the +LOC % LEL mode, the output signal will also be locked at full-scale. If this condition occurs, the Ultima X Series Gas Monitor must be unlocked by performing a "Zero Function" with the Ultima X Series Gas Monitor Calibrator or Controller. The Ultima X Series Gas Monitor will not revert to a normal condition until a successful zero operation has been performed. This is an exclusive safety feature of the Ultima X Series Gas Monitor which pre-empts the possibility of ambiguous readings when the sensor is exposed to concentration of gas above 100% LEL

In the OVER % LEL mode, the combustible gas is over the100%LEL range. It returns to normal operation when gas concentration level falls below 100%LEL.

Table 2-1. Instrument Operation

NOTES:
[1] ALERT option causes the 4-20 mA output to be set to 3.75 mA during O_2 sensor calibration (if the Cal Signal Option is also enabled). If the ALERT option is disabled and the Cal Signal enabled, the output is set to 21 mA during the O_2 sensor calibration.
[2] Swap Delay timeout is 60 seconds if enabled; 0 seconds otherwise.
[3] The Swap Delay feature enables a one-minute hold-off of the Sensor Missing Fault, allowing the user to "Swap" or change sensors without having the 4-20 mA set to a fault condition.
[4] Alarming operation are followed if the alarms are enabled.

OPERATION	LEDs GREEN	RED	4 to 20 mA	FAULT RELAY
NORMAL	ON steady	OFF	Gas value	Energized
ALARMING	OFF	Flashing	Gas value	Energized
FAULT	OFF	ON steady	3.0 mA	De-energized
POWER UP (HART Version)	OFF	ON steady	<3.75 mA	De-energized
POWER UP (Non-HART Version)	OFF	ON steady	<3.1 mA	De-energized
COUNT DOWN (All Versions)	OFF	ON steady	ALERT option[1] disabled; 21.0 mA for O_2; 3.75 mA for others ALERT option[1] enabled: 3.75 mA for all	Energized if ALERT option disabled De-energized if ALERT option enabled[3]
SENSOR MISSING/ COUNT-DOWN	OFF	ON steady	3.0 mA if Swap Delay timeout[2] expired, Swap Delay[3] disabled or FAULT Previous gas value if Swap Delay[3] enabled and Swap Delay timeout[2] not expired	De-energized if Swap Delay timeout[2] expired, Swap Delay[3] disabled or FAULT Energized if Swap Delay[3] enabled and Swap Delay timeout[2] not expired
SENSOR CAL	OFF	ON steady	3.75 mA if cal signal enabled and ALERT option[1] enabled; gas value if cal signal disabled 21.0 mA for O_2 if cal signal enabled and ALERT option[1] disabled	Energized if ALERT option disabled De-energized if ALERT option enabled[1]
CAL 4-20	OFF	ON steady	4 mA if 4 mA calibration selected 20 mA if 20 mA calibration selected	Energized if ALERT option disabled De-energized if ALERT option enabled[1]
CAL FAULT	OFF	ON steady	Gas value	De-energized two seconds every minute
UNDER-RANGE	OFF	ON steady	3.0 mA if gas value 0 or less; gas value otherwise	De-energized
OVER-RANGE/ LOC	ON steady[4]	OFF[4]	21.0 mA	Energized

Calibration Basics

While the Ultima X Series Gas Monitor is factory-calibrated, it is good practice to calibrate the unit once it is installed in its final environmental destination.

As with any type of gas monitor, the only true check of its performance is to apply gas directly to the sensor. The frequency of the calibration gas tests depends on the operating time and chemical exposures of the sensors. New sensors should be calibrated more often until the calibration records prove sensor stability. The calibration frequency can then be reduced to the schedule set by the safety officer or plant manager.

Catalytic Combustible sensors located in areas where non-combustible chemicals may leak, particularly ones known to reduce the sensitivity (see following list) should be calibrated after such exposures.

- Silanes, Silicates, Silicones and Halides (compounds containing Fluorine, Chlorine, Iodine or Bromine)
- TABLE 3-2 in Chapter 3 lists interferants for electrochemical sensors.

Before calibrating, the Ultima X Series Gas Monitor must be powered for a minimum of one hour to allow the sensor to settle into its new environment.

⚠ CAUTION

Before attempting a calibration, power the unit at least one full hour.

To ensure a fully functional sensor, perform a calibration check and adjustments at initial start-up and at regular intervals.

When it is determined that calibration adjustments are required, the Ultima X Series Gas Monitor provides a one-man, non-intrusive method of adjustment at the unit.

To calibrate the unit, one of the following accessories is necessary:

- Ultima Calibrator P/N 809997 (FIGURE 2-2)
- Ultima Controller P/N 809086(FIGURE 2-3)
- Optional Push-button Calibration (FIGURE 2-4). Instructions for use of the optional push-button are given in Appendix A.

- HART®-compatible communications interface with Device Description Language capability (DDL) or generic HART interface with Manufacturer Specific Command capability. This hand-held HART Communicator must be HART revision 7 compliant and can be obtained from a HART-authorized supplier. See Appendix D for command definitions.

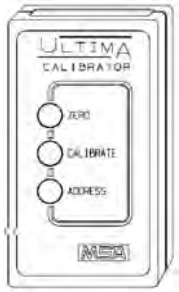

Figure 2-2. Ultima Calibrator

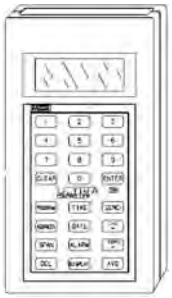

Figure 2-3. Ultima Controller

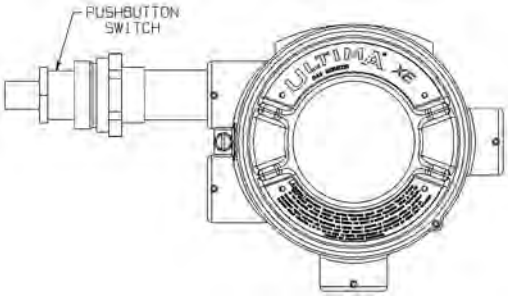

Figure 2-4. Ultima X Optional Push-button Calibrator

Ultima Calibrator

The Ultima Calibrator allows the following functions:

- Zero
- Calibration (zero and span)
- Changing address for some models.

Ultima Controller

The Ultima Controller also provides the above functions, plus access to the following features:

- Three levels of alarm and relays
- Date of last successful calibration
- Maximum gas readings over selected time periods
- Average gas readings over selected time periods
- Changing span gas value from factory-set value
- Access to real-time clock for time and date
- Changing of full scale value.

NOTE: See Ultima Controller/Calibrator manual (P/N 813379) for full functionality.

NOTE: When an Ultima X Series Gas Monitor has an active latched alarm (indicated by a flashing alarm display):

- An infrared (IR) remote device (such as the Ultima Calibrator or Controller) may be used to reset this alarm.
- The next IR command it receives from a calibration device will reset the latched alarm (if it is not beyond the alarm threshold). The intended IR command will be ignored and interpreted as an 'alarm reset.' When the latching alarm function is inactive, other valid IR commands may be used.

Calibration Output Signal

The Ultima X Series Gas Monitor is shipped with the calibration output signal **DISABLED** so the output signal will track the gas concentration value during the calibration process. In some applications, it may be desirable to disable or lock the output to a pre-determined output value to prevent activation of alarm devices. The calibration signal can be **ENABLED** using the Ultima Controller or a HART controller with DDL- or manufacturer-specific command capability. When the calibration

signal is enabled, the output signal is 3.75 milliamps for the 4 to 20 milliamp output models.

NOTE: For oxygen sensors, the calibration signal will be 21 mA. Oxygen can be set to a 3.75 mA calibration signal by turning ON the ALERT option as described in the Ultima Controller manual.

Calibration Kit

Calibration Kits are available for the Ultima X Gas Monitors. For the recommended calibration kit, see Ultima Controller/Calibrator manual (P/N 813379).

Ultima X Series Gas Monitor Calibration Procedure

Read all calibration instructions before attempting an actual calibration. Also, identify and become familiar with all of the calibration components. During the calibration, it is necessary to quickly apply the span gas to the unit. Prior connection of the calibration components will aid in the ease of unit calibration.

The only true check of any gas monitor's performance is to apply gas directly to the sensor. The calibration procedure must be performed regularly.

NOTES:

- If this is the first calibration or, if the sensor element has been changed or replaced, see Chapter 2, "Initial Calibration."
- If this is an **oxygen sensor**, see subsequent section, "Oxygen Calibration."
- If this is an **XIR sensor**, see subsequent section, "XIR Calibration."
- Apply power to the unit at least 1 hour before calibrating.
- Due to the unstable nature of Chlorine Dioxide (ClO_2), Chlorine gas is used as a calibration simulant. If using the MSA calibration system and gas cylinder (P/N 710331), the response ratio is 2:1. In other words, the 2 ppm sample of Chlorine should be set to read 1 ppm of ClO_2. The default value for the calibration gas on the ClO_2 Ultima X Series Gas Monitor is 1 ppm.
- For **Cl_2** and **ClO_2** calibration, do not mix regulators. Use only one regulator for each of these gases. They will not work properly if one regulator is used for multiple gases.

- Due to the reactivity of HCL with flow system components, the flow control regulator must only be used for HCL gas. HCL gas must be run through the flow control regulator and tubing for five minutes before attempting a calibration. After a successful calibration, flush the flow control regulator and tubing with 100% Nitrogen for five minutes. Store the flow control regulator in the desiccated bag included in Calibration Kit 54 or equivalent dry container.

Equipment Required

Three calibration kits (numbered 40, 41, and 54) are available from MSA for diffusion Ultima X Series Gas Monitors. Kit 40, 41, and 54 are housed in a convenient carrying case and contain all items necessary (less gas) for a complete and accurate calibration.

These Kits do not calibrate Ultima X Series units equipped with a flow cap.

NOTE: The calibration procedure for the sample draw Ultima XE/XA Monitor is the same as the procedure for the diffusion version, except calibration gas is applied to the calibration entry port of the inlet flow block and the cal kit for pumped units provides a flow matching regulator.

The check or calibration gases can also be carried in the case. See TABLE 2-2 for the appropriate zero and span gas cylinders for your Ultima X Series Gas Monitor.

TABLE 2-2 shows the recommended calibration kit for Ultima X Series Gas Monitors. Typically, Cal Kit 41 uses 0.25 LPM regulator and a calibration cap to contain the calibration gas. Cal Kits 40 and 54 use a 1.5 LPM regulator and no calibration cap. If Cal Kit 41 is recommended and the application is such that the calibration cap cannot be used (such as for a remote sensor application), Cal Kit 40 may be used. However, any time Cal Kit 40 is used, ambient wind conditions must be minimized to avoid a calibration with increased sensitivity.

NOTE: The Ultima XIR uses Cal Kit 40 and does require a calibration cap. This calibration cap (P/N 10041533) is shipped with the product.

⚠ WARNING

These calibration kits contain zero caps to use in place of zero calibration gas. These caps can only be used when the ambient air does not contain the gas the monitor is detecting. If there is any doubt, use zero gas when zeroing the Ultima X Monitor; otherwise, improper calibration could occur.

Span Gas Values

The Ultima X Series Gas Monitor is factory-shipped with a preset span gas value (TABLE 2-2). This span gas value can be changed via the Ultima Controller or a HART controller; otherwise, the span gas must correspond to preset concentrations. See Section 3 of the Controller/Calibrator Manual (P/N 813379) to change the span gas value. See Appendix D for the equivalent HART command

The span gas value of Ultima X Gas Monitor catalytic combustible models are pre-set to one of the broad categories shown in TABLE 2-2. Specific span gas values for all combustible models are listed under each category given in TABLE 2-3.

⚠ WARNING

Always calibrate for the least sensitive gas or vapor (higher number category) expected to be measured (TABLE 2-3); otherwise, instrument readings may be incorrect.

Table 2-2. Factory-set Span Values

GAS TYPE	RANGE	SPAN GAS PRESET VALUES	RP CYLINDER P/N	CAL KIT	WARM-UP TIME
CARBON MONOXIDE	0-100 PPM 0-500 PPM 0-1000 PPM	60 PPM 300 PPM 400 PPM	710882 10027938 10028048	40	15 minutes
SULFUR DIOXIDE	0-25 PPM 0-100 PPM	10 PPM 10 PPM	10028070 808978	40	15 minutes
HYDROGEN SULFIDE	0-10 PPM 0-50 PPM 0-100 PPM 0-500 PPM	5 PPM 40 PPM 40 PPM 250 PPM	710414 10028062 10028062 10089547	40	15 minutes
NITRIC OXIDE	0-100 PPM	50 PPM	10028074	40	15 minutes
NITROGEN DIOXIDE	0-10 PPM	5 PPM	710332 41	41	30 minutes

GAS TYPE	RANGE	SPAN GAS PRESET VALUES	RP CYLINDER P/N	CAL KIT	WARM-UP TIME
CHLORINE	0-5 PPM 0-10 PPM 0-20 PPM	2 PPM 2 PPM 10 PPM	710331 10028066	41	30 minutes 30 minutes 30 minutes
HYDROGEN CYANIDE	0-50 PPM	10 PPM	10028072	41	30 minutes
HYDROGEN FLUORIDE[7]	0-10 PPM	8 PPM	10028070	41	30 minutes
CHLORINE DIOXIDE[4]	0-3 PPM	1 PPM	710331	41	30 minutes
OXYGEN	0-10% 0-25%	5% 20.8%	493580 10028028[2]	40	15 minutes 15 minutes
NATURAL GAS[3]	0-100% LEL	25% LEL[1]	10028034	40	15 minutes
PETROLEUM VAPORS[3] (GASOLINE)	0-100% LEL	40% LEL[1]	10028034	40	15 minutes
GENERAL SOLVENTS[3]	0-100% LEL	55% LEL[1]	10028034	40	15 minutes
NON-METHANE IR	0-100% LEL	29% LEL[1]	10028034	40	- - -
METHANE IR	0-100% LEL	50% LEL[5]	10028032	40	- - -
PHOSPHINE	2.0 PPM	0.5 PPM	710533	41	24 hours
ARSINE	2.0 PPM	1.0 PPM	710533	41	24 hours
SILANE	25 PPM	5 PPM	10014897	41	4 hours
DIBORANE	50 PPM	15 PPM	10014897	41	30 minutes
FLUORINE	5.0 PPM	4.0 PPM	710331	41	30 minutes
BROMINE	5.0 PPM	2.5 PPM	710331	41	30 minutes
AMMONIA	100 PPM 0-1000 PPM	25 PPM 300 PPM	10028076 10044014	40 40	30 minutes 30 minutes
HYDROGEN	0-1000 PPM	500 PPM	10022386	40	30 minutes
ETHYLENE[6] OXIDE	0-10 PPM	4.0 PPM	10028070	40	24 hours
CARBON DIOXIDE IR	0-5000 PPM 0-2% 0-5%	2000 PPM 1.5% 2.5%	479266 807386 479265	40	- - -
HYDROGEN CHLORIDE	0-50 PPM	40 PPM	10028078	41	30 minutes

NOTES:
[1] Calibrated with Propane (.6% gas by volume)
[2] Not required for standard calibration procedure
[3] For combustible gas, it is good practice to calibrate unit with gas to be detected
[4] ClO_2 is calibrated with Cl_2 or use ClO_2 Calibrator Kit (P/N 710420)
[5] Methane IR is calibrated with 50% LEL Methane
[6] ETO is calibrated with SO_2.
[7] Hydrogen Fluoride (HF) is calibrated with Sulfur Dioxide (SO_2).
10 ppm SO_2 equals 8 ppm HF.

Table 2-3. Calibration Guide for Combustible Gas Sensor

CATEGORY 31: FOR CATALYTIC TYPE 1S NATURAL GAS

To detect the following gases, recalibrate with 0.6% propane & set span gas value accordingly

Acetaldehyde	23	Hydrogen	16
Acetylene	24	MAPP Gas	20
Butadiene, 1, 3	25	Methane	20
Carbon Monoxide	20	Methanol	20
Ethane	24	Methylene Chloride	24
Ethylene	25	Monomethyl Amine	22
Ethylene Dichloride	22	Trigonox B	22

CATEGORY 32: FOR CATALYTIC TYPE 1S PETROLEUM VAPORS

To detect the following gases, recalibrate with 0.6% propane & set span gas value accordingly

1, 1, 1-Trichloroethane	32	Ethylene Oxide	36
Acetic Acid	28	Freon 152A	28
Acetone	37	Gasoline	35
Acrolein	28	Hexane	40
Acrylonitrile	26	Isoprene	33
Allyl chloride	30	Methyl Acetate	34
Benzene	37	Methyl Chloride	32
Butane (n)	36	Methyl Propene (2)	29
Butane (iso)	32	Methyl t-Butyl Ether	35
Butanol (iso)	38	Pentane (n)	36
Butene-1	34	Pentane (iso)	36
Butene-2	37	Pentene	35
Butyl Acetate (n)	28	Propane	29
Butylene	33	Propanol (n)	36
Butyraldehyde	30	Propanol (iso)	37
Chlorobenzene	38	Propylene	33
Cyclohexane	37	Propylene Oxide	33
Dimethoxyethane	26	Tetrahydrofuran	30
Dioxane, 1, 4	39	Toluene	39
Epichlorhydrin	33	Trichloroethylene	35
Ethanol	30	Triethylamine	38
Ether, Diethyl	37	Vinyl Acetate	34
Ether, Dimethyl	30	Vinyl Chloride	32

CATEGORY 33: FOR CATALYTIC TYPE 1S GENERAL SOLVENTS

To detect the following gases, recalibrate with 0.6% propane & set span gas value accordingly

Amyl alcohol	43	JP-4	41
Butanol (n)	48	Methyl Cellosolve	49
Butyl Acrylate	46	Methyl Ethyl Ketone	52
Cellosolve	42	Methyl Isobutyl Ketone	53
Di isopropylamine	42	Methyl Methacrylate	40
Diethylamine	41	Naphtha, VM&P	53
Ethyl Acetate	43	Octane (iso)	52
Ethyl Acrylate	52	Propyl Acetate	45
Ethyl Benzene	41	Styrene	42
Heptane	42	Xylene	50
Hexene	42		

CATEGORY 38: ULTIMA XIR METHANE	
To detect the following gases, recalibrate with 2.5% methane & set span gas value accordingly	
Methane	50

CATEGORY 39: ULTIMA XIR NON-METHANE
To detect non-methane gases, recalibrate with stated % propane & set span gas value as given in Appendix B
For additional gases for the Ultima XIR, see Appendix B.

INITIAL Calibration

When the unit is powered up for the first time, or when a new sensor module is placed in the unit, an *INITIAL* Calibration is recommended. This procedure enables the unit to gather data about the sensor to make accurate decisions for the CHANGE SENSOR function and the CAL FAULT function to work properly. During normal use, *INITIAL* calibration should only be used when a standard calibration will not clear a fault condition due to use of incorrect calibration gas or another similar situation.

The *INITIAL* calibration is accomplished by:

- simultaneously pressing the ZERO and CALIBRATE buttons of the Ultima Calibrator or
- pressing and holding SPAN button on the Ultima Controller or
- using the optional push-button calibration as outlined in Appendix A, "Optional Push-button Calibration"
- using the HART Communicator as described in Appendix D.

After starting the INITIAL calibration:

- The display should show "APPLY ZERO GAS"
- The word "ICAL" on the display distinguishes an *INITIAL* Calibration from a regular calibration. If "ICAL" does not appear, abort the calibration; then, retry the above procedure.

NOTE: The zero or calibration process can be aborted at any time simply by pressing any button during the 30-second countdown on the Calibrator while aiming at the unit or by pressing and releasing the push-button if push-button calibration is available.

- The remainder of the procedure is now the same as that for a regular calibration, as described in the following procedure.

Standard Calibration

A standard calibration includes a "zero" and "span" procedure as described in the following procedures. If the user chooses to only perform a "zero" procedure, they may do so by pressing the ZERO button on the Calibrator or Controller instead of the CALIBRATE button as described as follows, or by using the optional push-button calibration as outlined in Appendix A, "Optional Push-button Calibration". Both the "zero" and the "span" functions are available on the HART Controller and are described in Appendix D.

Zeroing

1. **If Using the zero cap:**

   If the ambient air is suitable, with no traces of the gas of interest, place the appropriate Calibration Kit zero cap over the SensorGard inlet and wait two minutes; otherwise, use zero gas.

2. **If Using zero gas cylinder:**

   a. Locate the zero gas cylinder and the Calibration Kit Flow Controller.

   b. Screw the Flow Controller onto the top of the zero gas cylinder.

   c. Locate the Tube Assembly from the cal kit.

   d. Push the smaller end of the Tube Assembly over the Flow Controller gas outlet and ensure tubing completely covers the gas outlet.

   e. When using Cal Kit 40, connect the other end of the tubing over the SensorGard inlet.

      When using Cal Kit 41, locate the cal cap (with hole for tubing) and push the tubing through the hole in the bottom of the cap. Then, connect the end of the tubing over the sensor inlet and push the calibration cap over the entire sensor inlet.

   f. Turn on zero gas flow by turning knob on the flow controller.

3. Point the Calibrator or Controller at the Ultima X Series Monitor display; press the CALIBRATE button.

   NOTE: The zero or calibration process can be aborted at anytime during the 30-second countdown interval; simply press any button on the Calibrator or Controller while aiming it at the unit or by pressing and releasing the push-button if push-button calibration is available.

   NOTE: The 30-second countdown interval is omitted for oxygen units; it is electronically zeroed.

The display shows:

- A countdown from 30 to 0 seconds
- APPLY ZERO GAS (FIGURE 2-5).

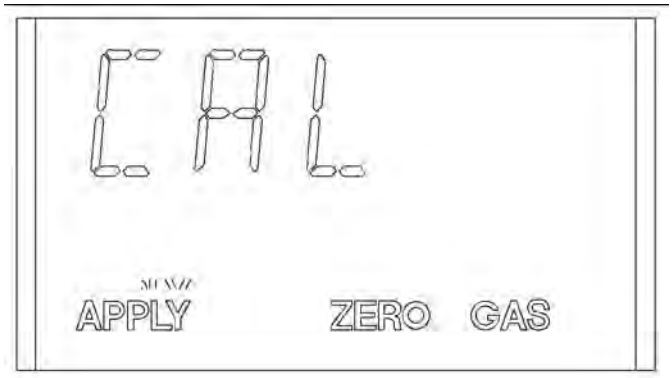

Figure 2-5. Apply ZERO Gas Flag

4. After the 30 second countdown:
   - The display alternates between "CAL" and a value. This value is the actual reading of the gas concentration the sensor is detecting.
   - Once the gas value on the display is stable, the alternating display stops. If the calibration is successful, the display will show END.

   a. If using the zero cap: remove it.

   b. If using a zero gas cylinder:

      1) Turn OFF the gas flow by turning the flow controller knob.

      2) Remove the tubing from the SensorGard.

         - If the calibration output signal is enabled during calibration, it will be held at the lockout value for an additional two minutes or until after the span routine if performing a full calibration.

   c. If CAL FAULT appears on the display, this indicates:

      - An unsuccessful attempt to zero or calibrate the Ultima X Series Monitor
      - The Ultima X Series Monitor is operating with the calibration parameters defined before the calibration was attempted.

- See Troubleshooting Guidelines found in Chapter 4.

  To extinguish the CAL FAULT, a complete, successful calibration procedure must be performed.

  The Ultima X Series Gas Monitor allows automatic zero adjustment only within a pre-defined range. It cannot make corrections outside this range, such as when an empty or wrong cylinder of gas is applied or failure to begin gas flow within the allotted 30-second countdown occurs.

- If only a ZERO was performed, the procedure is complete and the user should return the calibration equipment to the cal kit. If a CAL was performed, the gas monitor will continue to the "span" sequence as described in the following section.

Spanning

5. During a regular calibration, the Ultima X Series Gas Monitor automatically begins the span countdown after a successful zeroing of the unit. The span countdown is 30 seconds (FIGURE 2-6).

   NOTE: The span process can be aborted at any time during the countdown by simply pressing any button on the Calibrator while aiming it at the unit or by pressing and releasing the push-button if push-button calibration is available.

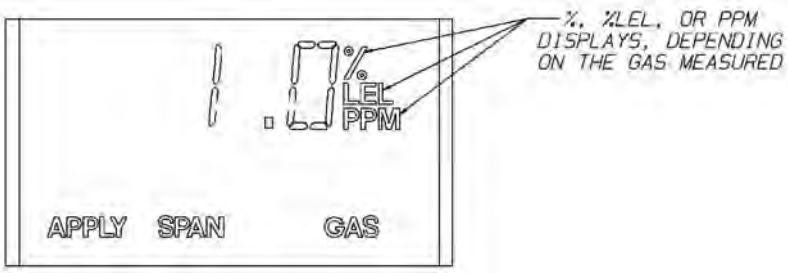

Figure 2-6. Apply SPAN Gas Flag

6. Locate the span gas cylinder and the Calibration Kit Flow Controller.
7. Screw the Flow Controller onto the top of the span gas cylinder.
8. Locate the Tube Assembly from the cal kit.
9. Push the smaller end of the Tube Assembly over the gas outlet of the Flow Controller and ensure that the tubing completely covers the gas outlet.
10. When using Cal Kit 40, connect the other end of the tubing over the SensorGard inlet.

    When using Cal Kit 41, locate the cal cap (with hole for tubing) and push the tubing through the hole in the bottom of the cap. Then, connect the end of the tubing over the sensor inlet and push the calibration cap over the entire sensor inlet.
11. Turn ON the gas flow by turning the flow controller knob.
    - It is good practice to have all calibration components previously assembled.
    - Ensure that any calibration gases are applied during the 30-second count down period.
    - If a CAL FAULT indication is on the Ultima X Series Gas Monitor display before the user is able to apply the gas, a steady state gas condition was reached, causing the unit to use a wrong reading as a span indication.
    - It is necessary to restart the calibration process to clear this condition.
12. After the 30 second countdown:
    - The display alternates between "CAL" and a value. This value is the actual reading of the gas concentration the sensor is detecting.
    - Once the gas value on the display is stable, the alternating display stops. If the calibration is successful, the display will show END for approximately two seconds. (FIGURE 2-7).
    - No user adjustments are necessary.
    - The display will show the span gas value while the span gas is flowing to the unit.
13. Turn OFF the gas flow by turning the knob on the flow controller.

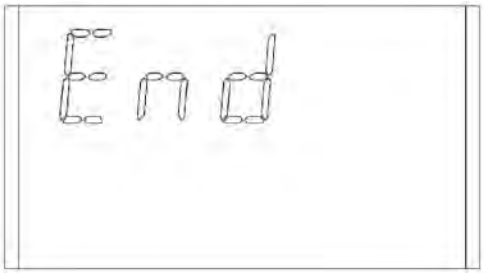

Figure 2-7. Calibration End Display

- If the calibration output signal is enabled during calibration, it will be held at the lockout value for two additional minutes after END is displayed.
- When the span gas is removed from the sensor, the sensor reading should change to show an ambient condition.
- If a CAL FAULT appears on the display, this indicates:
  - An unsuccessful attempt to calibrate the Ultima X Series Gas Monitor
  - The Ultima X Series Gas Monitor is operating with the calibration parameters defined before the calibration was attempted.

  To extinguish the CAL FAULT flag, a complete calibration procedure must be performed.

  The Ultima X Series Gas Monitor allows automatic zero and span adjustments within a pre-defined range. It cannot make corrections outside this range, such as when an empty or wrong cylinder of gas is applied or failure to begin gas flow within the allotted 30-second countdown occurs.

14. After a successful calibration, remove the tubing from the Flow Controller and remove the Flow Controller from the cylinder; return all items to their appropriate location in the Calibration Kit.

OXYGEN Calibration

NOTE: If this is the first calibration after the sensor element is replaced, perform an "Initial Calibration."

Oxygen calibration is slightly different from other gases. When the **ZERO** function is performed, the 30-second countdown is omitted because the Ultima/Ultima X Series unit performs the zero electronically. No calibration cap or zero gas is necessary.

To meet the specification stated, it is necessary to span the oxygen Ultima/Ultima X Series Gas Monitor with the Calibration Kit and an oxygen cylinder. The concentration of oxygen in air varies slightly due to changing relative humidity and pressure levels. These variations in oxygen levels are detected by the oxygen Ultima/Ultima X Series Gas Monitor. To meet the reproducibility specification, it is necessary to use a calibration gas cylinder. This ensures the same concentration of oxygen for every calibration.

25% Oxygen Ultima/Ultima X Series Gas Monitor

For the **SPAN** function, ambient air is generally adequate for the 25% oxygen Ultima/Ultima X Series Gas Monitor as the expected default span value is 20.8%. Therefore, when the display prompts "APPLY SPAN GAS" it would be adequate to simply allow the countdown to occur without applying gas.

NOTE: If the sensor is located in an area of normally low or enriched oxygen, then a 20.8% oxygen sample must be applied when the display prompts: "**APPLY SPAN GAS**".

XIR Calibration

Although a full calibration (zero and span) can be performed on the Ultima XIR Gas Monitor, a no-gas calibration is sufficient to properly calibrate the monitor. Typically, a zero adjustment is all that is required for a full calibration. Normally, any degradation of the sensor's performance is associated with slight drifts in its zero response which, in turn, will adversely affect its span performance. Restoring the sensor's zero is typically sufficient to restore its span performance.

A zero adjustment is performed by one of the following methods:

- pressing the ZERO button on the Calibrator or Controller
- using the optional push-button calibration as outlined in Appendix A, "Optional Push-button Calibration"
- using the HART Controller or DCS, as described in Appendix D.

Follow the "Zeroing" instructions given earlier in this chapter. After completing the zeroing function, perform a span check to ensure proper operation. If the span check is unsuccessful, perform a full calibration.

NOTE: For calibration of an XIR sensor operating with a Flow Cap, temporarily replace the Flow Cap with the Environmental Guard (packaged with the instrument) and perform the calibration procedure.

⚠ WARNING

The Calibration Cap must be removed from the XIR environmental guard after completing the Zeroing and/or Spanning procedure; otherwise, the sensor cannot perform properly.

Calibration Documentation

The Ultima X Series Monitor records the date of the last successful calibration. This date can then be displayed on the front-panel LCD (with the use of the Controller or via the HART Controller).

Chapter 3, Specifications

Table 3-1. Performance Specifications

GAS TYPES	Combustibles, Oxygen & Toxics		
TEMPERATURE RANGE	**TOXICS & OXYGEN**	**OPERATING RANGE**	0 to 40°C (32 to +104°F)
		***EXTENDED RANGE**	-20 to +50°C (-4 to +122°F)
		OPERATING RANGE NH_3	0 to +30°C (32 to +86°F)
		***EXTENDED RANGE NH_3, Cl_2, ClO_2**	-10 to +40°C (+14 to +104°F)
		Calibrate within operating range	
	CATALYTIC COMBUSTIBLES	**SINGLE & DUAL MODULES**	-40 to +60°C (-40 to +140°F)
	IR COMBUSTIBLES	**SINGLE & DUAL MODULES**	-40 to +60°C (-40 to +140°F)
STORAGE TEMPERATURE RANGE			-40 to +70°C (-40 to +158°F) or limits of the sensor
DRIFT	**ZERO DRIFT**	Less than 5%/year, typically	
	SPAN DRIFT	Less than 10%/year, typically	
NOISE		Less than 1% FS	

*Extended Range = The sensor may not meet all of the accuracy parameters listed.

ACCURACY GAS	LINEARITY	REPEATABILITY
CARBON MONOXIDE	±2% FS	±1% FS or 2 ppm
OXYGEN	±2% FS	±1% FS
HYDROGEN SULFIDE	±10% FS or 2 ppm	±1% FS or 2 ppm
CHLORINE	±10% FS or 2 ppm	±5% FS or 1 ppm
SULFUR DIOXIDE	±10% FS or 2 ppm	±1% FS or 2 ppm
NITRIC OXIDE	±10% FS or 2 ppm	±1% FS or 2 ppm
NITROGEN DIOXIDE	±10% FS or 2 ppm	±4% FS or 1 ppm
HYDROGEN CYANIDE	±10% FS or 2 ppm	±4% FS or 2 ppm
HYDROGEN CHLORIDE	±10% FS or 2 ppm	±10% FS or 2 ppm
CATALYTIC COMBUSTIBLE GAS	<50% LEL ±3% FS >50% LEL ±5% FS	±1% FS ±1% FS
IR COMBUSTIBLE GAS: METHANE, PROPANE	<50% LEL - ±2% >50% LEL - ±5%	±2% FS ±2% FS
CHLORINE DIOXIDE	±10% FS or 2 ppm	±5% FS or 1 ppm
ETHYLENE OXIDE	±10% FS	±5% FS
AMMONIA	±10% FS	±5% FS
HYDROGEN	±5% FS	±5% FS
PHOSPHINE	±10% FS	±10% FS
ARSINE	±10% FS	±10% FS
SILANE	±10% FS or 2 ppm	±1% FS or 2 ppm
DIBORANE	±10% FS or 2 ppm	±1% FS or 2 ppm
FLUORINE	±10% FS or 2 ppm	±5% FS or 1 ppm
HYDROGEN FLUORIDE	±10% FS	±10% FS
BROMINE	±10% FS or 2 ppm	±5% FS or 1 ppm

STEP CHANGE RESPONSE	**TIME TO REACH 20% OF SCALE-OXYGEN & TOXICS**	Less than 12 seconds (typically 6 seconds) Less than 20 seconds (ETO)
	TIME TO REACH 50% OF SCALE-OXYGEN & TOXICS	Less than 30 seconds (typically 12 seconds) Less than 45 seconds (ETO)
	TIME TO REACH 50% OF SCALE-COMBUSTIBLES	Less than 10 seconds
	TIME TO REACH 90% OF SCALE-COMBUSTIBLES	Less than 30 seconds
HUMIDITY		15 to 95% RH, non-condensing, 24 hours or less 15 to 60% RH (SO_2**) 35 to 95% RH, long term
SENSOR LIFE	**CATALYTIC COMBUSTIBLES**	3 years, typically
	OXYGEN & TOXICS	2 years, typically
	AMMONIA	***
	FULL REPLACEMENT WARRANTY	1 year from installation; 10 years for IR Sensor source (see "MSA Instrument Warranty" in this manual for complete details)
WIRING REQUIRE-MENTS	**OXYGEN & TOXICS**	2-wire or 3-wire
	COMBUSTIBLES	3-wire
	RELAYS	3-wire

**SO_2 sensor should not be used in dirty or humid environments.

***0-100 ppm NH_3 sensor is consumable at a rate of 10% for every 200 ppm/hours of exposure.
0-1000 ppm NH_3 sensor is consumable at a rate of 10% for every 1500 ppm/hours of exposure.

POWER CONSUMPTION * (TOTAL UNIT WITH RELAYS)	**OXYGEN & TOXICS**	8 VDC 12 VDC 24 VDC	250 mA max 175 mA max 100 mA max
	CATALYTIC COMBUSTIBLES	8 VDC 12 VDC 24 VDC	600 mA max 400 mA max 210 mA max
	IR COMBUSTIBLES	8 VDC 12 VDC 24 VDC	870 mA max 550 mA max 290 mA max
SIGNAL OUTPUT	**COMBUSTIBLES**	3-wire current source	
	OXYGEN & TOXICS	2-wire current sink 3-wire current source	
XA PHYSICAL	**SIZE**	9.423" H x 5.125" W x 3" D inches (239.34 mm x 130 mm x 76 mm)	
	WEIGHT	1.5 pounds (0.7 kilograms)	
XE PHYSICAL	**SIZE**	10.280" H x 6.312" W x 3.911" D inches (261.11 mm x 160.33 mm x 99.34 mm)	
	WEIGHT	10.4 pounds (4.72 kilograms)	

* The HART output signal is not available below 12 VDC on the two-wire pc board.

Table 3-2. Sensor Response to Interferants

If your readings are higher or lower than expected, it could be due to the presence of an interferant gas.

- The gas listed in column 1 is presented to the sensor.
- Column 2 indicates the concentration of that gas presented to the sensor.
- The remaining columns indicate the respective responses by the sensors to each particular gas.

For Example:
Scan column 1 until you locate "hydrogen". Column 2 shows that 500 ppm of hydrogen was presented to the sensor. Column 3 shows that a CO (filtered) sensor gave an equivalent response of 200 ppm. Column 4 shows that an H_2S sensor gave an equivalent response of 0.5 ppm, etc.

ND = No Data

INTER-FERANT	CONCEN-TRATION (PPM)	CO filtered	H_2S	Cl_2	SO_2 filtered	NO	NO_2	HCN	HCL
Acetone	1000	0	0	0	0	ND	0	ND	ND
Acetylene	12000	0	0	0	0	ND	ND	ND	ND
Ammonia	25	0	0	0	0	ND	0	0	0
Arsine	1	0	0	0	0	0	ND	ND	1
Benzene	20	0	0	0	0	ND	ND	0	ND
Bromine	2	0	0	2.5	ND	0	0	0	ND
Carbon Dioxide	5000	0	0	0	0	0	0	0	0
Carbon Disulfide	15	0	0	0	0	0	ND	0.1	0
Carbon Monoxide	100	100	0.3	0	0.2	ND	0	0	0
Chlorine	5	0	-3	5	0	0	0	-0.2	0
Diborane	20	0	0	0	0	ND	ND	ND	0
Ethylene	50	100	0.1	0	0	ND	0	-0.3	ND
Ethyl Alcohol	100	115	0	0	0	ND	ND	0	ND
Ethylene Oxide	10	ND	ND	ND	0	ND	ND	ND	ND
Ether	400	3	0	0	0	ND	0	ND	ND
Fluorine	5	0	0	2.5	0	0	ND	0	0
Freon 12	1000	0	0	0	0	0	0	0	0
Germane	1	0	0	0	0	0	ND	ND	1
Hexane	500	0	0	0	0	ND	0	0	ND
Hydrogen	500	200	0.5	0	15	ND	-10	0	0
Hydrogen Chloride	50	0	0	0	0	4	0	ND	50
Hydrogen Cyanide	10	0	0	0	0	0	0	10	0
Hydrogen Fluoride	10	0	0	0	0	ND	ND	ND	6.5
Hydrogen Sulfide	10	1	10	-0.1	0	1	-8	50	40
MEK	200	0	0	0	0	0	0	ND	ND
Mercaptan (Methyl)	5	0	4.5	-0.1	0	1	ND	6	ND
Methane	5000	0	0	0	0	0	0	0	0
Nitric Oxide	100	0	2	0	2	100	ND	-3	40
Nitrogen Dioxide	5	-1	-4	0.5	-5	1.5	5	ND	0
Phosphine	0.5	ND	0	0	ND	0	ND	ND	2
Silane	5	0	0	0	0	0	ND	ND	7
Sulfur Dioxide	10	0	0.3	0	10	0.5	ND	-0.3	0
Tichloro-ethylene	1000	0	0	0	0	0	ND	ND	ND

ND = No Data

INTER-FERANT	CONCEN-TRATION (PPM)	ClO_2	HF	PH_3	ASH_4	SiH_4	GeH_3	B_2H_6	Br_2
Acetone	1000	0	0	ND	ND	ND	ND	ND	0
Acetylene	12000	0	0.1	ND	ND	ND	ND	ND	0
Ammonia	25	0	0	ND	ND	ND	ND	ND	0
Arsine	1	0	ND	0.7	1	1	1	5	0
Benzene	20	0	ND	ND	ND	ND	ND	ND	0
Bromine	2	1	ND	ND	ND	ND	ND	ND	2
Carbon Dioxide	5000	0	0	ND	ND	ND	ND	ND	0
Carbon Disulfide	15	0	ND	0	0	0	0	0	0
Carbon Monoxide	100	0	0	0	1	0	0	0	0
Chlorine	5	2.5	5	ND	ND	ND	ND	ND	4
Diborane	20	0	ND	3.5	5	4	5	20	0
Ethylene	50	0	0	0.5	1	1	1	2	0
Ethyl Alcohol	100	0	0	ND	ND	ND	ND	ND	0
Ethylene Oxide	10	0	ND	ND	ND	ND	ND	ND	ND
Ether	400	0	0	ND	ND	ND	ND	ND	0
Fluorine	5	1	ND	ND	ND	ND	ND	ND	2
Freon 12	1000	0	0	0	0	0	0	0	0
Germane	1	0	ND	0.7	1	1	1	5	0
Hexane	500	0	0	ND	ND	ND	ND	ND	0
Hydrogen	500	0	0	0	0	0	0	0	0
Hydrogen Chloride	50	0	30	ND	ND	ND	ND	ND	0
Hydrogen Cyanide	10	0	0	ND	ND	ND	ND	ND	0
Hydrogen Fluoride	10	0	10	ND	ND	ND	ND	ND	0
Hydrogen Sulfide	10	0	3	ND	ND	ND	ND	ND	0
MEK	200	0	ND	ND	ND	ND	ND	ND	0
Mercaptan (Methyl)	5	0	ND	ND	ND	ND	ND	ND	0
Methane	5000	0	0	ND	ND	ND	ND	ND	0
Nitric Oxide	100	0	2	ND	ND	ND	ND	ND	0
Nitrogen Dioxide	5	0.2	2.5	ND	ND	ND	0.5	ND	0.4
Phosphine	0.5	0	0	0.5	1	0.7	1	3	0
Silane	5	0	ND	0.1	0.2	5	0.2	15	0
Sulfur Dioxide	10	0	8	ND	1	2	3	6	0
Tichloro-ethylene	1000	0	0	ND	ND	ND	ND	ND	0

ND = No Data

INTER-FERANT	CONCEN-TRATION (PPM)	F_2	NH_3	H_2	EtO
Acetone	1000	0	ND	ND	ND
Acetylene	12000	0	ND	ND	ND
Ammonia	25	0	25	ND	0
Arsine	1	0	ND	ND	ND
Benzene	20	0	ND	ND	ND
Bromine	2	12	ND	ND	ND
Carbon Dioxide	5000	0	0	0	ND
Carbon Disulfide	15	0	ND	ND	ND
Carbon Monoxide	100	0	0	2	ND
Chlorine	5	10	0	0	0
Diborane	20	0	ND	ND	ND
Ethylene	50	0	0	40	ND
Ethyl Alcohol	100	0	ND	ND	10
Ethylene Oxide	10	ND	ND	ND	10
Ether	400	0	ND	ND	ND
Fluorine	5	5	ND	ND	ND
Freon 12	1000	0	0	0	0
Germane	1	0	ND	ND	ND
Hexane	500	0	ND	ND	ND
Hydrogen	500	0	ND	500	ND
Hydrogen Chloride	50	0	0	0	ND
Hydrogen Cyanide	10	0	0	3	0
Hydrogen Fluoride	10	0	ND	ND	ND
Hydrogen Sulfide	10	-0.2	0.5	1	ND
MEK	200	0	0	ND	3
Mercaptan (Methyl)	5	-0.2	ND	ND	ND
Methane	5000	0	ND	ND	ND
Nitric Oxide	100	0	0	3	ND
Nitrogen Dioxide	5	1	ND	ND	0
Phosphine	0.5	0	0	0	0
Silane	5	0	ND	ND	ND
Sulfur Dioxide	10	0	0	0	ND
Tichloro-ethylene	1000	0	ND	ND	ND

Chapter 4, Maintenance

General

The Ultima X Gas Monitor is constantly performing a self-check. When a problem is found, it displays the appropriate error message (TABLE 4-3, "Troubleshooting Guidelines"). When a critical error is detected within the unit, the 4-20 mA output signal goes to a fault condition of 3.0 mA

The "Sensor Warning" indication is not an error and does not affect the output. TABLES 4-1 and 4-2 describe the messages that users may see.

Table 4-1. Operational Display Messages

MESSAGE	INDICATES
MM/DD/YY	Format for date scrolling
VER	Software version level will display next
TIME	Time will display next
DATE	Date will display next
MIN	MIN value for this interval will display next
MAX	MAX value for this interval will display next
AVG	AVG value for this interval will display next
Adr	Instrument's address will display next
End	End of calibration cycle
Err	An Error code will display next
HR	Special case indicates hours (two characters or less)
OVER	Gas value is greater than the set range

Table 4-2. Configuration Display Messages

MESSAGE	INDICATES
CAL SIG ON	Instrument will output the calibration signal during calibration
CAL SIG OFF	Instrument will output gas value during calibration
LTCH/	Latching relay operations
UNLTCH/	Non-latching relay operations
INCR/	Increasing Alarm relay operations
DECR/	Decreasing Alarm relay operations
ENER	Energized relay operations
DENER	De-energized relay operations
CAL	Normal calibration or 4-20 calibration cycle
iCAL	Initial calibration cycle
OFF	Alarm is OFF
ON	Alarm is ON
RNGE	Instrument's operational full-scale will display next
PCAL	Instrument's previous calibration date will display next
TBLE	Instrument gas table selection (if applicable)
ALERT OP ON	Instrument output will follow ALERT mode
ALERT OP OFF	Instrument output will not follow ALERT mode
SWAP DELAY ON	60-second delay after sensor missing before fault
SWAP DELAY OFF	Fault occurs at sensor missing condition

Table 4-3. Troubleshooting Guidelines (In priority order)

MESSAGE	INDICATES	ACTION
MN FLASH FAULT	Program memory on the main PCBA is invalid	Replace main pc board
MN RAM FAULT	Defective RAM memory location was found on the main PCBA	Replace main pc board
MN EEPROM FAULT	EEPROM on the main PCBA is invalid	Replace main pc board
SENSOR MISSING	Instrument has lost communica-tion with the sensor module	Connect or replace sensor
SNSR FLASH FAULT	Sensor module program memory is invalid	Replace sensor module
SNSR RAM FAULT	Sensor module has a defective RAM location	Replace sensor module
SNSR DATA FAULT	Sensor module datasheet is invalid	Send reset data sheet command from the controller; if error persists, replace sensor
INVALID SENSOR	Attached sensor module is not compatible with main instrument	Replace with correct sensor type

MN SUPPLY FAULT	Power supply on main PCBA is out of range	Check sensor wiring or replace main pc board
RELAY FAULT	Error with the internal relays has occurred	Cycle power to the unit or replace main pc board
SNSR POWER FAULT	Power at the sensor module is out of range	Correct wiring error, replace main pc board, or replace sensor module
IR SOURCE FAULT	IR source failure	Replace or consult factory
FIXED CURRENT MODE	4-20 mA is at a set level and will not change when Controller gas is applied or under fault conditions	Exit Fixed Current Mode using the HART
- SUPPLY FAULT	The negative supply sensor module is out of range	Check wiring or replace sensor module
REF SIG FAULT	IR reference detector failure	Replace or consult factory
ANA SIG FAULT	IR analytical detector failure	Replace or consult factory
LOW SIGNAL	Low IR signal	Clean optics or replace sensor module. If in cleaning mode, no action required
PARAM FAULT	An operational parameter is out of range or sensor failed internal check	Restart; replace, if necessary
CONFIG RESET	Main EEPROM memory was reset	Use Controller to reset all configurations (e.g., alarm levels, calibration signals ON or OFF, etc)
CHANGE SENSOR	Sensor is at its end of life	Replace sensor
ZERO CAL FAULT OR SPAN CAL FAULT	Instrument did not calibrate successfully	Repeat calibration; check for proper calibration gas; check for blockage in the flow system
SENSOR WARNING	Sensor approaching end of life	Prepare to replace sensor module
CHECK CAL	Calibration should be verified	Perform bump test or calibration
+LOC	Instrument is locked in over-range condition	Recalibrate or reset sensor
OVER % LEL	Sensor is exposed to a gas concentration above the LEL	The instrument will return to normal operation when the gas concentration drops below 100% LEL
und	Under-range condition - quick	Recalibrate or replace sensor
Und	Under-range condition - slow	Recalibrate or replace sensor

The highest priority message is displayed first. Lower priority messages are output only after the highest priority message is cleared. A manual selected scanning of low-priority messages is not possible.

Ultima XIR Cleaning Procedure

The presence of particulate matter, oil films, liquid water, or the residue from water drops on the two monitor windows can adversely affect its performance. The environmental guard is designed to prevent foreign solids or liquids from reaching the monitor's optical system. Additionally, heating elements are incorporated into the unit to prevent water condensation. Under severe conditions, however, some material may collect on these surfaces and it may be necessary to occasionally check and clean the windows.

1. Remove the environmental or flow cap.
2. Place an opaque object (piece of paper, end of wrench handle, etc.) between the light source window and the mirror to completely obscure the light path for two to three seconds.
   - The Ultima XIR/Ultima XI Monitor enters the Cleaning Mode for two minutes.

   NOTE: While in the Cleaning Mode, the sensor will not respond to the presence of gas.

   - The analog current output is 3.0 mA during this time.
   - The display indicates 'low signal''.
3. While both windows are made of a highly durable material that is not easily scratched, avoid excessive pressure when cleaning them. Clean, cotton-tipped applicators are the most convenient tool to remove material collected on the windows.
   - Use a dry applicator or one moistened with distilled water to wipe the window and remove dust.
   - Use an additional clean, dry applicator to remove any residual water.
   - Use an applicator moistened with isopropyl alcohol to remove heavy deposits of solids, liquids or oil films. Clean the window again with a second applicator moistened with distilled water; then, dry the window with a final applicator.
   - Avoid using excessive amounts of water or alcohol in the cleaning procedure, and inspect the window to ensure that the entire surface is clean.
     - The unit remains in the Cleaning Mode for a minimum of two minutes. If active cleaning is still in progress at the end of this period, the sensor detects the motion of this object in its light path and automatically extends the Cleaning

Mode for 15 seconds. Further 15-second Cleaning Mode extensions continue until no motion is detected.

NOTE: When the cleaning process is complete, be sure to remove all objects from the light path.

4. When exiting the Cleaning Mode, the unit returns to normal operation. If water or isopropyl alcohol was used, allow the unit to operate for 15 minutes to completely dry before replacing the environmental guard and continuing to monitor for combustible gas.
5. Replace the environmental or flow cap.
6. After cleaning the windows, it is advisable to check the sensor's response to both zero and calibration gas.

⚠ CAUTION

Do not place foreign objects in the sensor's analytical region (except per the "Ultima XIR Cleaning Procedure" as described above); otherwise, the infrared beam can be partially blocked, causing the sensor to generate false readings. All objects must be removed from the sensor's analytical region for it to function properly. Similarly, if water or isopropyl alcohol is used to clean the sensor's windows, any residue from the cleaning procedure must be completely dissipated before returning the unit to service. Checking the sensor's response to zero gas is the best way to purge residual cleaning materials from the sensor and to make sure that sensor's reading is stable before zeroing or calibrating the sensor (see Chapter 2, "Start-up and Calibration").

Replacing an Ultima XE or Ultima XA Sensor

The only routine maintenance item is the sensing element itself, which has a limited lifetime. When the Ultima X Series Gas Monitor's read-out indicates that the sensor must be changed, there is very little sensor lifetime remaining. It is good practice to obtain a replacement sensing element before the sensing element within your unit becomes inoperative. Typically, the Ultima X Series Monitor LCD display shows a maintenance message when the sensor is due for replacement (FIGURE 4-1).

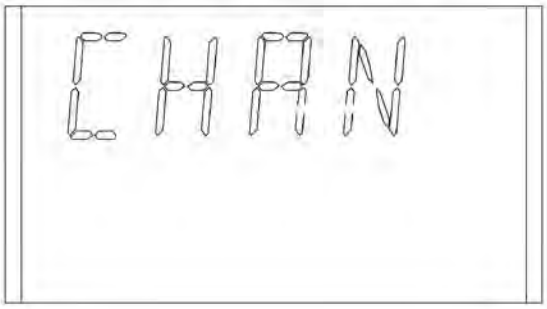

Figure 4-1. "Change Sensor" Scrolls Across the Display

⚠ WARNING

Electrochemical sensors are sealed units which contain a corrosive electrolyte. If electrolyte is leaking from the sensor, exercise CAUTION to ensure the electrolyte does not contact skin, eyes or clothing, thus avoiding burns. If contact occurs, rinse the area immediately with a large quantity of water. In case of contact with eyes, immediately flush eyes with plenty of water for at least 15 minutes. Call a physician.

⚠ CAUTION

Do not install a leaking sensor in the sensing head assembly. The leaking sensor must be disposed of in accordance with local, state and federal laws. To obtain a replacement sensor, contact MSA at the address given under "Obtaining Replacement Parts."

1. There is no need to open the main enclosure; simply unscrew the sensor assembly located on the bottom of the Ultima X Series Gas Monitor main assembly (FIGURE 4-2).

⚠ WARNING

For Ultima XE sensors marked Class I, Groups A, B, C and D and not used in Class II areas, unscrew sensor cap at least three full turns (but no more than four full turns from its tightly-closed position), wait 10 seconds, and then remove cap completely. Failure to follow this warning can result in the ignition of a hazardous atmosphere.

For the Ultima XE Sensor marked Class II Groups F and G, atmosphere must be free of dust and the power removed from the unit before the sensor cap can be removed from the housing. Failure to follow this warning can result in the ignition of a hazardous atmosphere.

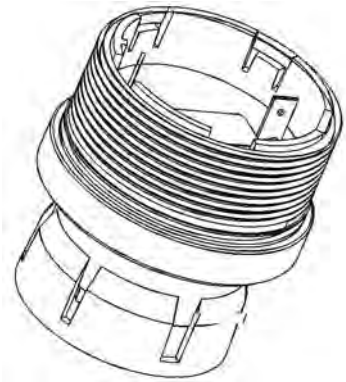

Figure 4-2. Sensor Assembly and Sensor Guard for General-Purpose Model

2. Identify the sensor assembly needed via the A-ULTX-SENS code on the interior sensor label and obtain the appropriate sensor assembly; replace sensor assembly.

   NOTE: Alarm setpoints and relay functions (energized/de-energized, latching/unlatching, and upscale/downscale) will not change when changing a sensor module from its current gas type to the same gas type (e.g., carbon monoxide to carbon monoxide). Alarm setpoints and the upscale/downscale relay function will change to the new sensor's default settings when changing a sensor module from its current gas type to a different gas type (e.g., carbon monoxide to oxygen).

3. The Ultima X Series Gas Monitor is shipped with the Sensor Swap Delay enabled. This means that the 4-20 mA output signal and the FAULT relay will hold off a fault indication for 60 seconds after the sensor missing indication is displayed on the instrument. This setting allows the operator to exchange sensor modules without a FAULT indication.

4. Refer to Chapter 2, "Calibration" to calibrate with the new sensor.

It is recommended that all other maintenance be performed at an MSA factory-authorized service center.

Obtaining Replacement Parts

See TABLE 4-4 for replacement sensor kits. To obtain a replacement sensor, address the order or inquiry to:

Mine Safety Appliances Company
MSA North America
P.O. Box 427, Pittsburgh, PA 15230-0427

or call, toll-free, **1-800-MSA-INST**. Inquiries can also be e-mailed to ***customer.service@msanet.com***.

⚠ WARNING

Use only genuine MSA replacement parts when performing any maintenance procedures provided in this manual. Failure to do so may seriously impair sensor and gas monitoring performance. Repair or alteration of the Ultima X Series Gas Monitor, beyond the scope of these maintenance instructions or by anyone other than authorized MSA service personnel, could cause the product to fail to perform as designed and persons who rely on this product for their safety could sustain serious personal injury or loss of life.

Table 4-4. Replacement Parts

GAS SELECTION	SENSOR KIT PART NO.		
	GENERAL-PURPOSE PLASTIC MODEL A	EXPLOSION-PROOF MODEL E E	GENERAL-PURPOSE STAINLESS MODEL G
Carbon Monoxide, 100 ppm	A-ULTX-SENS-11-0...	A-ULTX-SENS-11-1...	A-ULTX-SENS-11-6...
Carbon Monoxide, 500 ppm	A-ULTX-SENS-12-0...	A-ULTX-SENS-12-1...	A-ULTX-SENS-12-6...
Oxygen, 10% - compensated	A-ULTX-SENS-13-0...	A-ULTX-SENS-13-1...	A-ULTX-SENS-13-6...
Oxygen, 25% - compensated	A-ULTX-SENS-14-0...	A-ULTX-SENS-14-1...	A-ULTX-SENS-14-6...
Hydrogen Sulfide, 10 ppm	A-ULTX-SENS-15-0...	A-ULTX-SENS-15-1...	A-ULTX-SENS-15-6...
Hydrogen Sulfide, 50 ppm	A-ULTX-SENS-16-0...	A-ULTX-SENS-16-1...	A-ULTX-SENS-16-6...
Hydrogen Sulfide, 100 ppm	A-ULTX-SENS-17-0...	A-ULTX-SENS-17-1...	A-ULTX-SENS-17-6...
Chlorine, 5 ppm	A-ULTX-SENS-18-0	not available	A-ULTX-SENS-18-6...
Sulfur Dioxide, 25 ppm	A-ULTX-SENS-19-0...	A-ULTX-SENS-19-1...	A-ULTX-SENS-19-6...
Nitric Oxide, 100 ppm	A-ULTX-SENS-20-0...	A-ULTX-SENS-20-1...	A-ULTX-SENS-20-6...
Nitrogen Dioxide, 10 ppm	A-ULTX-SENS-21-0...	A-ULTX-SENS-21-1...	A-ULTX-SENS-21-6...
Hydrogen Cyanide, 50 ppm	A-ULTX-SENS-22-0...	A-ULTX-SENS-22-1...	A-ULTX-SENS-22-6...

GAS SELECTION	SENSOR KIT PART NO.		
	GENERAL-PURPOSE PLASTIC MODEL A	EXPLOSION-PROOF MODEL E	GENERAL-PURPOSE STAINLESS MODEL G
Hydrogen Chloride, 50 ppm	A-ULTX-SENS-23-0...	not available	A-ULTX-SENS-23-6...
Chlorine Dioxide, 3 ppm	A-ULTX-SENS-24-0...	not available	A-ULTX-SENS-24-6...
Combustible Gas, 100% LEL Natural Gas and H_2, 5% CH_4	A-ULTX-SENS-31-0...	A-ULTX-SENS-31-1...	A-ULTX-SENS-31-6...
Combustible Gas, 100% LEL Petroleum Vapors, 2.1% Propane	A-ULTX-SENS-32-0...	A-ULTX-SENS-32-1...	A-ULTX-SENS-32-6...
Combustible Gas, 100% LEL Solvents, 2.1% Propane	A-ULTX-SENS-33-0...	A-ULTX-SENS-33-1...	A-ULTX-SENS-33-6...
Comb Gas IR - Methane, 5% CH_4	not available	A-ULTX-SENS-38-1...	not available
Comb Gas IR - Non Methane, 2.1% Propane	not available	A-ULTX-SENS-39-1...	not available
Phosphine, 2 ppm	A-ULTX-SENS-41-0...	A-ULTX-SENS-41-1...	A-ULTX-SENS-41-6...
Arsine, 2 ppm	A-ULTX-SENS-42-0...	A-ULTX-SENS-42-1...	A-ULTX-SENS-42-6...
Silane, 25 ppm	A-ULTX-SENS-43-0...	A-ULTX-SENS-43-1...	A-ULTX-SENS-43-6...
Germane, 3 ppm	A-ULTX-SENS-44-0...	A-ULTX-SENS-44-1...	A-ULTX-SENS-44-6...
Diborane, 50 ppm	A-ULTX-SENS-45-0...	not available	A-ULTX-SENS-45-6...
Bromine, 5 ppm	A-ULTX-SENS-46-0...	not available	A-ULTX-SENS-46-6...
Fluorine, 5 ppm	A-ULTX-SENS-47-0...	not available	A-ULTX-SENS-47-6...
Ammonia, 100 ppm	A-ULTX-SENS-48-0...	not available	A-ULTX-SENS-48-6...
Hydrogen, 1000 ppm	A-ULTX-SENS-49-0...	A-ULTX-SENS-49-1...	A-ULTX-SENS-49-6...
ETO, 10 ppm	A-ULTX-SENS-50-0...	not available	A-ULTX-SENS-50-6...
Ammonia, 0-1000 PPM	A-ULTX-SENS-54-0...	not available	A-ULTX-SENS-54-6...
Oxygen-Solvent Tolerant, 0-25%	not available	A-ULTX-SENS-55-1...	not available
Carbon Monoxide, 0-1000 PPM	A-ULTX-SENS-57-0...	A-ULTX-SENS-57-1...	A-ULTX-SENS-57-6...
Chlorine, 0-20 PPM	A-ULTX-SENS-61-0...	not available	A-ULTX-SENS-61-6...
Oxygen-Solv & CO_2 Tolerant, 0-25%	not available	A-ULTX-SENS-62-1...	not available
Oxygen-Low, 0-25%	not available	A-ULTX-SENS-63-1...	not available
Oxygen-Low, Solv Tolerant, 0-25%	not available	A-ULTX-SENS-64-1...	not available

SENSOR REPLACEMENT PARTS

PART	PART NO.
XE Sensor Guard	10028904
XIR Sensor Guard	10041265
XIR Flow Cap	10042600

Appendix A, Optional Features

1) Internal Relays

General Information

The internal relays are designed to enable Ultima X Series Gas Monitors to control other equipment. There are four relays within the Ultima X Series Gas Monitor's module:

- three alarm relays
- one fault relay.

Once configured, the relays activate when the Ultima X Gas Monitor detects an alarm condition. Similarly, the fault relay de-energizes when a fault condition is detected.

The alarm relays are enabled in the non-latching, de-energized mode at the factory.

- To disable or configure the alarms, you need the Ultima Controller (P/N 809086) or a HART Communicator.
- The fault relay is normally-energized so the relay de-activates into a fail-safe condition if a fault or power outage occurs. See "Fault Relay" later in this Appendix.

⚠ CAUTION

To prevent false alarms in the following instances, alarms/relays are temporarily disabled:

1) During the first minute from power-up

2) During calibration

3) For two minutes after calibration.

4) For one minute after the sensor missing indication displays (if the Delay feature is enabled).

Unpacking, Mounting and Wiring

Unpack, mount and wire the Ultima X Series Gas Monitor according to Chapter 1, "Installation". All electrical connections to the Ultima X Series Gas Monitor can be made via the clearly marked board-mounted connections.

NOTE: To avoid electrical noise problems, do not run AC lines from relays in the same conduit or cable tray as the DC Signal lines.

See Ultima Controller and Calibrator Manual (P/N 813379) for complete relay configuration information.

Power cable wiring lengths for the Ultima X Series Gas Monitor *with* internal relays differ from models *without* internal relays (TABLE A-1).

Table A-1. Cable Length and Wire Size for Units With Internal Relays

GAS TYPE	SENSOR OUTPUT	DC VOLTAGE SUPPLY	WIRE SIZE (AWG)	MAXIMUM CABLE LENGTH WITHOUT HART (FEET)	(METERS)	MAXIMUM LOAD RESISTANCE (OHMS)
Oxygen or Toxic	3 Wire	12 VDC	16	2,500	762	250
		24 VDC	16	8,000	2,438	500
Combustible	3 Wire	12 VDC	16	900	274	250
		24 VDC	16	3,000	914	500
XIR	3 wire	12 VDC	16	400	152	250
		24 VDC	16	2,500	762	500

- In all installations, twisted instrument-quality cable is recommended.
- Shielded cable is recommended in situations where radio frequency interference (RFI), electro-magnetic interference (EMI) or other electrical noise sources exist or are anticipated.

Ultima X Series Gas Monitor Internal Relays

Relay Specifications

Table A-2. Relay Specifications

TEMPERATURE RANGE		-40 to +60°C (-40 to +140°F)
HUMIDITY		15 to 95% RH, non-condensing
RELAYS	**3 ALARMS SPDT FAULT (NORMALLY-ENERGIZED)**	(Single pole, double throw) SPDT (Single pole, double throw)
RELAY RATINGS	**At 125 or 250 VOLTS AC, NON-INDUCTIVE**	5.0 Amps or 5 Amps @ 1/10 Hp
	At 30 Volts DC, NON-INDUCTIVE	5.0 Amps or 5 Amps @ 1/10 Hp

Alarm Relays

There are three alarm relays and one fault relay in the Ultima X Series Gas Monitors. The three alarm relays:

- Activate when the Monitor detects a gas concentration level that exceeds setpoints
  - Alarms 1, 2 and 3 generally default to 10%, 20% and 30% of the full-scale reading and are set when the gas reading is above these values.
  - The Oxygen Model is a special case where:
    - Alarm 1 is set to 19% oxygen and activates below this setpoint
    - Alarm 2 is set to 18% oxygen and activates below this setpoint
    - Alarm 3 is set to 22% oxygen and activates above this setpoint.
  - These default setpoints can be changed or verified via the Ultima X Controller.
    - See Ultima/Ultima X Controller and Calibrator manual (P/N813379).
    - The Controller can also enable the latching alarm function.
- Are factory-set to a de-energized position.
  - All relay connections have a normally-open set of contacts and a normally-closed set of contacts. These contacts are labeled as NCD (normally-closed, de-energized) or NCE (normally-closed, energized).
  - The units are shipped with alarm relays factory-set to the de-energized (non-alarm) position and the trouble relay set to the energized (non-fault) position.
  - Upon activation, the relay contacts change state and remain changed for as long as:
    - The alarm condition exists within the Ultima X Series Gas Monitor or
    - The latching mode is selected (see "Note on Resetting Latched alarms with Controller or Calibrator" in Chapter 2).
  - These defaults can be changed or verified via the Ultima X Controller.

Fault Relay or Trouble

- It is a normally-energized, single-pole, double-throw (SPDT) relay.
- During normal operation, the relay contacts are normally closed (NC) and normally open (NO) as shown in FIGURE A-1.

NOTE: FIGURE A-1 depicts the version of the printed circuit board assembly without HART components. FIGURE 1-17 is the equivalent HART version.

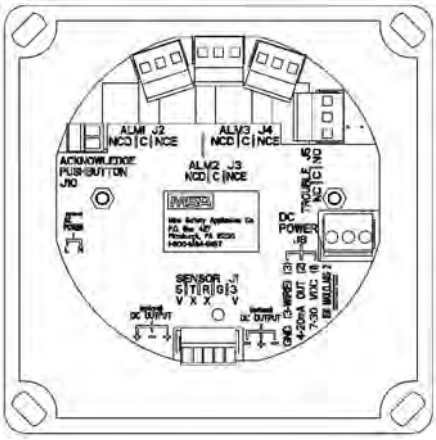

Figure A-1. Relay Contacts

- When a fault is detected or power is cut or turned OFF, these contacts change as follows:
  - normally closed contacts open
  - normally open contacts close.
- Provides an electrical path for fail-safe relay operation. In the event of any failure, including power loss, the relay will change to a fault condition.

The Fault Relay can remain STEADY ON or PULSED. These two different modes can communicate different information to any PLC or DCS connected to the fault relay:

- **Fault Relay STEADY ON indicates:**
  - Ultima X Series sensor is not connected properly or
  - Ultima X Series Gas Monitor internal fault or
  - An inoperative relay.

- **Fault Relay PULSED (once per minute) indicates:**
  - Improper calibration of the Ultima X Series Gas Monitor or
  - Ultima X Series Gas Monitor CHECK CAL or CAL FAULT displayed.

Relay Connections

All electrical connections to internal relays can be made directly on the pc board (see FIGURE A-1).

If you are connecting the relays to motors, fluorescent lighting or other inductive loads, it is necessary to suppress any sparks or inductive feedback that may occur at the relay contact. These effects may render the unit inoperative. One way to reduce these effects is to install a *Quencharc® across the load being switched. This device is available from MSA as P/N 630413.

⚠ WARNING

Before wiring the Ultima X Series Gas Monitors, disconnect power source supplying the monitor; otherwise, electrical shock or ignition of hazardous gases could occur.

- The Ultima X Series Gas Monitor must be disassembled for relay wiring. The following procedure must be performed:

1. Remove the Ultima X Series Gas Monitor cover.
2. Pull on the wiring plugs to disconnect the connectors on the exposed board.

   NOTE: Observe connector locations for later re-insertion.

3. Route customer-supplied cable into the enclosure and connect to the appropriate wiring plugs.
4. Identify each conductor of the cable to enable proper connection at the control equipment.
5. If installing a RESET push-button:
   a. Route a two-conductor cable to terminal block J10 (FIGURE A-2).

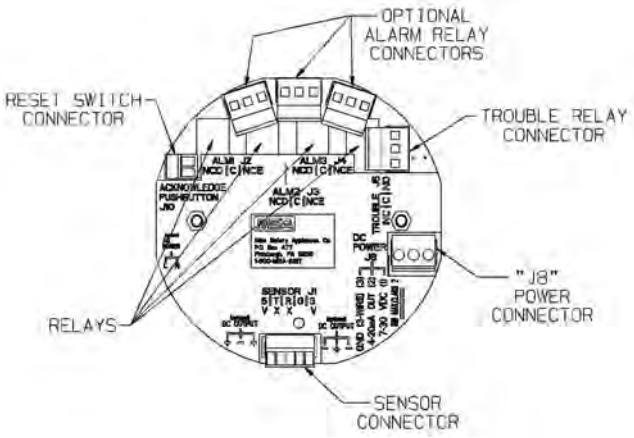

Figure A-2. Relay Printed Circuit Board

- Route this cable with DC power to avoid noise interference from relay wiring.

b. Connect the two-conductor cable to the two positions of terminal block J10.

c. Identify the cable to enable proper connection at the button.

d. Route cable to the push-button location; wire the button.

6. Re-install the wiring plugs.
   - Ensure that wiring plugs are firmly seated into their mates.
7. Pull the cable away from the unit to relieve any excess slack.
   - It is important not to have excess wire or cable within the module to avoid unwanted AC noise.
8. Re-install the cover of the Ultima X Series Gas Monitor.

2) Optional RESET Push-button

- If you are going to specify a switch to use with the Ultima X series, it should have, as a minimum, an equivalent (or better) approvals classification. The MSA provided pushbutton (P/N 10046923) is explosion-proof for Class I, Groups B, C, and D only. When relied upon for an explosion-proof capacity, do not install on equipment mounted or intended to be mounted in any other hazardous location.

  This pushbutton has been approved for use in Group A with the Ultima X Series when the protection technique is Nonincendive and the hazardous location is Division 2. Check product labels for protection technique.

  ⚠ WARNING

  When the pushbutton is used in conjunction with the Ultima XE Gas Monitor, the highest classification rating for the system is reduced to Class I, Div. 1, Groups B, C, & D. See MSA P/N 10048833 for installation instructions. Misuse can result in ignition of hazardous gases.

General

A RESET button is an optional feature to allow latching relays to be reset at the sensor location.

- This may silence any alarm horns or turn OFF any equipment connected to the relays.
- Latching relays can be configured on the Ultima X Series Gas Monitor via the Ultima Controller.
  - In a latching configuration: when the RESET button is pushed and any alarm is latched and not in its active alarm state, the alarm will reset.

  NOTE: An IR command can mimic the RESET button per Controller and Calibrator manual (P/N 813379).

  - In a non-latching configuration: the RESET button has no affect on the alarms.

RESET Button Selection

The RESET push-button can be acquired locally and wired to the Ultima X Series Gas Monitor during unit installation.

- The RESET push-button must be a normally-open type with a momentary contact when pushed.
- The electrical ratings must be at least 1 amp at 250 volts AC.
- Specific push-buttons may be sourced by manufacturers such as Appleton Electric and Crouse Hindes, Inc.

Optional Push-button Calibration

The following procedure is used to enter the calibration by using the push-button.

1. Press and hold the push-button until the ♥ heart is displayed.
2. Release the push-button.
   - At this time, any recoverable alarms will be acknowledged.
3. Press and hold the push-button within three seconds of the push-button release.
4. Release the push-button when the desired calibration is displayed. See TABLE A-3.

Table A-3. Push-button Calibration

CALIBRATION TYPE	DISPLAYED DATA	PUSH-BUTTON HOLD TIME
Zero Calibration	CAL ZERO	5 seconds
Span Calibration	CAL SPAN	10 seconds
ICAL	iCAL	20 seconds

   - Refer to Chapter 2, "Startup and Calibration" for more information on calibration.
5. The calibration can be aborted during the 30-second countdown by pressing the push-button until the ♥ is displayed.
   - When the push-button is released, the calibration will be aborted.

3) Optional Horn Relay Software

The Ultima X Series Gas Monitor is available with optional Horn Relay Software to allow an audible horn to be used with Relay 1. The following describes the use and functionality of this optional feature.

Relay 1 is considered the Horn Relay. It does not function directly with Alarm 1 as in the standard software. To configure, note that:

- Alarm 1 function is still active on the display
- Alarm 1 display has its own latching/non-latching configuration setting
- Horn Relay is configured as normally energized/de-energized via the Alarm 1 configuration setting; this is the only Alarm 1 configuration setting that uniquely controls the Horn Relay.
- Alarm/Relay 2 and Alarm/Relay 3 action remains unchanged.

NOTE: All relays, including Horn Relay hardware, have NO (normally open) and NC (normally closed) terminals.

To Activate the Horn Relay

The Horn Relay is initially active when any alarm (1, 2, or 3) condition is active. Once Horn Relay is reset, it is set again if the gas level:

- clears below or above the active setpoint and then moves back through the setpoint or
- continues to move through the next alarm set point.

To Reset the Horn Relay

The Horn Relay is reset by momentary contact closure using the pushbutton or by IR communications, regardless of whether or not the alarm has cleared.

- The Horn Relay automatically resets if all alarms are clear (such as when all alarms are unlatched and fall below or rise above their setpoints for negative acting alarms).
- If any alarm remains latched after the gas value moves out of the alarm range, the Horn Relay remains active until reset by the user.

Clearing latched alarms is done by using the optional pushbutton or the IR Controller.

Appendix B, Calibration Guide for Additional XIR/XI Gases

Compound	LEL	Curve	Cal Gas	Span Setting
Acetaldehyde	4.0	8	0.1% Propane	29%
Acetic Acid	4.0	3	0.6% Propane	12%
Acetone	2.5	8	0.1% Propane	20%
Acrolein	2.8	8	0.1% Propane	59%
Acrylic Acid	2.4	2	0.6% Propane	10%
Allyl Alcohol	2.5	1	2.5% Methane	85%
Allylamine	2.2	8	0.1% Propane	18%
Benzene	1.2	8	0.1% Propane	42%
1,3 - Butadiene	2.0	8	0.1% Propane	23%
Butane	1.9	4	0.6% Propane	29%
Butanol	1.4	6	0.6% Propane	42%
Butene	1.6	6	0.6% Propane	57%
Butyl Acetate	1.7	6	0.6% Propane	40%
Butyl Acrylate	1.5**	6	0.6% Propane	45%
Cyclohexane	1.3	1	2.5% Methane	50%
Cyclohexanone	1.1	6	0.6% Propane	74%
Cyclopentane	1.5	7	0.6% Propane	31%
1,2 - Dichloroethane	6.2	8	0.1% Propane	14%
Diethylamine	1.8	2	0.6% Propane	32%
Diethyl Ether	1.9	2	0.6% Propane	38%
Difluoro -1- Chloroethane (142-b)	6.2	8	0.1% Propane	20%
1,1 - Difluoroethane (152a)	3.7	2	0.6% Propane	52%
Diisopropyl Ether	1.4	6	0.6% Propane	34%
Dimethylamine	2.8	2	0.6% Propane	37%
Dimethyl Ether	3.4	2	0.6% Propane	32%
Dimethylethylamine (DMEA)	2.3	2	0.6% Propane	22%
Dimethylisopropylamine (DMIPA)	1.0**	6	0.6% Propane	47%
Epichlorohydrin	3.8	6	0.6% Propane	46%
Ethane	3.0	3	0.6% Propane	25%
Ethanol	3.3	6	0.6% Propane	31%
Ethyl Acetate	2.0	6	0.6% Propane	60%
Ethyl Acrylate	1.4	8	0.1% Propane	15%
Ethyl Benzene	0.8	8	0.1% Propane	15%
Ethylene	2.7	8	0.1% Propane	28%
Ethylene Oxide	3.0	6	0.6% Propane	52%
Heptane	1.1	2	0.6% Propane	35%
Hexamethyldisiloxane (HMDS)	0.5**	8	0.1% Propane	22%
Hexane	1.1	6	0.6% Propane	41%
Iso-Butane	1.8	2	0.6% Propane	60%
Iso-Butyl Alcohol	1.7	6	0.6% Propane	41%
Iso-Butylene	1.8	6	0.6% Propane	62%
Iso-Propanol	2.0	6	0.6% Propane	47%
Iso-Propyl Acetate	1.8	6	0.6% Propane	57%
Methane	5.0	1	2.5% Methane	50%

Methanol	6.0	3	0.6% Propane	23%
Methyl Acetate	3.1	5	0.6% Propane	46%
Methyl Amyl Ketone (MAK)	1.1	6	0.6% Propane	51%
Methyl Chloride	8.1	6	0.6% Propane	48%
Methylene Chloride	13.0	1	2.5% Methane	68%
Methyl Ethyl Ketone (MEK)	1.4	1	2.5% Methane	72%
Methyl Isobutyl Ketone (MIBK)	2.1	6	0.6% Propane	54%
Methyl Methacrylate	1.7	6	0.6% Propane	57%
Methyl Propyl Ketone (MPK)	1.5	6	0.6% Propane	54%
Methyl tert-butyl Ether (MTBE)	1.6	2	0.6% Propane	29%
Morpholine	1.4	6	0.6% Propane	59%
Nitro Methane	7.3	8	0.1% Propane	45%
Pentane	1.5	5	0.6% Propane	33%
Propane	2.1	2	0.6% Propane	29%
n-Propanol	2.2	2	0.6% Propane	36%
Propionaldehyde (Propanal)	2.6	6	0.6% Propane	69%
Propyl Acetate	1.7	6	0.6% Propane	41%
Propylene	2.0	6	0.6% Propane	77%
Propyleneimine	1.32**	6	0.6% Propane	72%
Propylene Oxide	2.3	2	0.6% Propane	38%
Pyridine	1.8	8	0.1% Propane	20%
Styrene	0.9	8	0.1% Propane	45%
Tetrahydrofuran (THF)	2.0	2	0.6% Propane	40%
Tetrahydropyran (THP)	1.6**	6	0.6% Propane	40%
tert - Butanol	2.4	2	0.6% Propane	27%
Toluene	1.1	8	0.1% Propane	18%
1,1,1 - Trichloroethane	7.5	8	0.1% Propane	20%
Triethylamine	1.2	6	0.6% Propane	36%
Trimethylamine	2.0	2	0.6% Propane	38%
Vinyl Acetate	2.6	8	0.1% Propane	63%
Xylenes (O-Xylene)	0.9	1	2.5% Methane	59%

All LEL values taken from NFPA (Dated 1997) except where noted.

Appendix C,
General Certification Information

Product	Agency	Country	Approval
Ultima XE Main	CSA	Canada	Explosionproof for CL. I, Div. 1, Gps A-D
	FM	USA and Canada	Explosionproof for CL. I, Div. 1, Gps A-D, T4; Nonincendive for CL. I, Div. 2, Gps A-D, T4; TYPE 4X, IP66
		IECEx scheme	Ex d IIC T4, IP66
	MET	USA and Canada	Unclassified locations
	UL	USA and Canada	Enclosure: CL. I, Div. 1, Gps A-D; CL. II, Gps F & G; CL. III
		USA and Canada	This equipment is suitable for use in CL. I, Div. 2, Gps A-D; CL. II, Div. 2, Gps F, G; CL. III Hazardous Locations or Non-Hazardous Locations Only; Type 4X
Ultima XE Main with XP Port (i.e. HART Barrier)	FM	USA and Canada	Explosionproof with Intrinsically safe Connection for CL. I, Div. 1, Gps A-D, T4; Nonincendive with Nonincendive field wiring connections for CL. I, Div. 2, Gps A-D, T4; TYPE 4X, IP66
		IECEx scheme	Ex d [ib] IIC T4, IP66
	UL	USA and Canada	This equipment is suitable for use in CL. I, Div. 2, Gps A-D; CL. II, Div. 2, Gps F, G; CL. III Hazardous Locations or Non-Hazardous Locations Only; Type 4X
Ultima XE Sensor	CSA	Canada	Explosionproof for CL. I, Div. 1, Gps A-D
	FM	USA and Canada	Explosionproof for CL. I, Div. 1, Gps A-D, T4; Nonincendive for CL. I, Div. 2, Gps A-D, T4; TYPE 4X, IP66
		IECEx scheme	Ex d IIC T4, IP66
	MET	USA and Canada	Unclassified locations
	UL	USA and Canada	Enclosure: CL. I, Div. 1, Gps A-D; CL. II, Gps F & G; CL. III
		USA and Canada	This equipment is suitable for use in CL. I, Div. 2, Gps A, B, C, D; CL. II, Div. 2, Gps F, G; CL. III Hazardous Locations or Non-Hazardous Locations Only; Type 4X
Ultima XIR Sensor	CSA	Canada	CL. I, Div. 1, Gps B-D
	FM	USA	Explosionproof for CL. I, Div. 1, Gps A-D, T5; Nonincendive for CL. I, Div. 2, Gps A-D, T5
		Canada	Explosionproof for CL. I, Div. 1, Gps B-D, T5; Nonincendive for CL. I, Div. 2, Gps A-D, T5
		IECEx scheme	Ex d IIC T5, IP66
	MET	USA and Canada	Unclassified locations
	UL	USA and Canada	Enclosure: CL. I, Div. 1, Gps B-D; CL. II, Gps E-G; CL. III
		USA and Canada	This equipment is suitable for use in CL. I, Div. 2, Gps A-D; CL. II, Div. 2, Gps F, G; CL. III Hazardous Locations or Non-Hazardous Locations Only; Type 4X

Product	Agency	Country	Approval
Hart Module	FM	USA and Canada	Explosionproof with Intrinsically Safe Connections for CL. I, Div. 1, Gps A-D. Nonincendive with Nonincendive field wiring connections for CL. I, Div. 2, Gps A-D.
		IECEx scheme	Ex d IIC T5, IP66
	UL	USA and Canada	This equipment is suitable for use in CL. I, Div. 2, Gps A-D; CL. II, Div. 2, Gps F, G; CL. III Hazardous Locations or Non-Hazardous Locations Only; Type 4X
Ultima X Power Supply	FM	USA and Canada	Explosionproof for CL. I, Div. 1, Gps A-D, T4; Nonincendive for CL. I, Div. 2, Gps A-D, T4;
		IECEx scheme	Ex d IIC T4, IP66
	UL	USA and Canada	This equipment is suitable for use in CL. I, Div. 2, Gps A-D; CL. II, Div. 2, Gps F, G; CL. III Hazardous Locations or Non-Hazardous Locations Only; Type 4X
Ultima Calibrator	CSA	Canada	Intrinsically Safe for CL. I, Div. 1, Gps A-D, T3C
	FM	USA and Canada	Intrinsically Safe for CL. I, Div. 1, Gps A-D, T3C
		IECEx scheme	Ex ia IIC T3
Ultima Controller	CSA	Canada	Intrinsically Safe for CL. I, Div. 1, Gps A-D, T3C
	FM	USA and Canada	Intrinsically Safe for CL. I, Div. 1, Gps A-D, T3C
		IECEx scheme	Ex ia IIC T3

NOTES:

1. Approvals subject to change without notice. Refer to label for current approval information.
2. FM – See Control Drawing SK3098-1057 for intrinsically safe connections.
3. FM – See Control Drawing SK3098-1108 for Nonincendive field wiring connections.
4. FM – Performance approval for Combustibles and Oxygen only.
5. FM – The Ultima X Control Unit complies with IEC 61779-1 and IEC 61779-4 when connected to a Detector Head that also has been evaluated to IEC 61779-1 and IEC 61779-4.
6. FM – The Ultima XE Sensor, Ultima XI Sensor, and Ultima XIR Sensor complies with IEC 61779-1 and IEC 61779-4 when connected to a Control Unit that also has been evaluated to IEC 61779-1 and IEC 61779-4.
7. FM - The Ultima XE Sensor and the Ultima XIR Sensor shall be connected directly to an Ultima X Series Control Unit or remote junction box.
8. Use of Teflon tape or Non-hardening thread sealant for environmental reasons is acceptable.
9. This Class A digital apparatus complies with Canadian ICES-003. Cet appareil numérique de la classe A est conforme à la norme NMB-003 du Canada
10. Check product label for specific approval information.

INSTALLATION AND OPERATING INSTRUCTIONS FOR DIVISION 2:

11. **WARNING – Explosion Hazard – Substitution of Components May Impair Suitability For CL. I, Div. 2.**
12. **WARNING – Explosion Hazard – Do Not Disconnect Equipment Unless Power Has Been Switched Off Or The Area Is Known To Be Non-Hazardous.**
13. Relay Output – 240Vac, 5 A or 30 Vdc, 5 A for Unclassified Locations.
14. Input and output wiring must be in accordance with CL. I, Div. 2 wiring methods and in accordance with the authority having jurisdiction.
15. UL – See Control Drawing SK3098-1072 for Nonincendive field wiring connections.

Appendix D,
HART Specific Information

HART Field Device Specification

The Ultima X Series Gas Monitor is available with an optional HART (Highway Addressable Remote Transducer) output communications protocol. With this option, the Ultima X Series Gas Monitor complies with HART Protocol Revision 7 and uses the 16-bit manufacturer and device codes. This document specifies all the device specific features and documents HART Protocol implementation details (e.g., the Engineering Unit Codes supported). These specifications assume the reader is somewhat familiar with HART Protocol requirements and terminology.

This specification is a technical reference for HART-capable HOST Application Developers, System Integrators and knowledgeable End Users. It also provides functional specifications (e.g., commands, enumerations and performance requirements) used during Field Device deployment, maintenance, testing, and operations. It is recommended that the 4-20 mA output be the primary gas monitoring signal. The HART signal can be the secondary method.

NOTE: The two-wire units' HART protocol does not comply fully with Immunity Standards EN61000-4-3 (2006) and EN61000-4-6 (2007).

Table D-1. Device Identification

MANUFACTURER NAME	MSA	MODEL NAME(S)	ULTIMA
Manufacture ID Code	0x6008	Device Type Code	0xE09F
HART Protocol Revision	7.0	Device Revision	1
Number of Device Variables	1	Notes:	
Physical Layers Supported	FSK, 4-20 mA		
Physical Device Category	Current Output		

Host Interface

Analog Output

The three-wire 4-20 mA current loop is connected on terminals marked 8-30 VDC(1), 4-20 mA OUT(2), and GND (3-wire)(3). The two-wire 4-20 mA current loop is connected on the 8-30 VDC(1) and 4-20 mA OUT(2) terminals. Refer to the installation outline drawings shown in Chapter 1, TABLE 1-1 for details.

This is the main output from this transmitter, representing the process gas measurement, linearized and scaled according to the configured instrument range. This output corresponds to the Primary Variable (PV). HART communications are supported on this loop. This device has a Capacitance Number (CN) of 1.

An inoperative device can be indicated by down-scale or up-scale current, depending on the sensor type. Current values are shown in TABLE D-2.

Table D-2. Current Values

	DIRECTION	VALUES (% OF RANGE)	VALUES (MA OR V)
Linear over- range	Down Up	0% +105.0% ±1.0%	4.00 mA 20.64 to 20.96 mA
Device malfunction indication	Down: less than Up: greater than		3.5 mA 20.96 mA
Maximum current			22.0 mA
Multi-drop Current draw			3.5 mA
Lift-off voltage, 3-wire PCBA			8 VDC
Lift-off voltage, 2-wire PCBA			13 VDC @ 250 Ohms

Table D-3. Device Variables Exposed by the Ultima Monitor

VARIABLE	DESCRIPTION	VARIABLE	DESCRIPTION
Gas Type	Sensor gas type description	Last Cal Date	Date sensor was last calibrated
Alarm Setpoints	Gas value at which an alarm status bit is set	Auto Zero comp	Amount of compensated below zero drift
Alarm Action	increasing or decreasing alarm type, latching or non latching	Alert option status	See next section
Alarm Status	Indication of alarm setpoint exceeded	Swap Delay status	See next section
Input Voltage	Device input voltage level		
Min/Max/Avg	Minimum, maximum and avg. value of PV over time	Sensor Temp	
Avg Interval	Time interval for min, max, avg (1,8 or 24 hr)	Sensor Status	Status returned by sensor
Gas Table	Linerization table selection	Relay EN/De-eng	Relay EN/De-eng
RTC Date	Device real time clock date	Cal Sig	Cal Signal Status
RTC Min	Device real time clock minutes		
RTC Hrs	Device real time clock hours		

Table D-4. Dynamic Variable implemented by Ultima Monitor

	MEANING	UNITS
PV	Gas Value	%, %LEL, PPM

Status Information

Device Status

Bit 4 ("More Status Available") is set when any failure is detected. Command #48 gives further details.

Extended Device Status

The Ultima Monitor can predict when certain maintenance will be required. This bit is set if a sensor fault or maintenance warning is detected. "Device Variable Alert" is set if the PV is out of limit.

Table D-5. Additional Device Status (Command #48)

Command #48 returns 5 bytes of data, with the following status information:

BYTE	BIT	MEANING	CLASS	DEVICE STATUS BITS SET
0	0	Configuration Reset	Error	4,7
	1	Main ram fault	Error	4,7
	2	Main flash fault	Error	4,7
	3	EEprom write error	Error	4,7
	4	Incompatible sensor	Error	4,7
	5	Sensor quick under range	Error	4,7
	6	Sensor UNDer range	Error	4,7
	7	Calibration fault	Error	4,7
1	0	Sensor Missing	Error	4,7
	1	Sensor Overrange	Warning	
	2	Overrange Lock	Warning	
	3	Parameter Fault	Error	4,7
	4	Sensor Warm up	Warning	
	5	Sensor Config Reset	Warning	
	6	Sensor Power Fault	Error	
	7	5V Power Fault	Error	
2	0	Zero Countdown	Info	
	1	Apply Zero Gas	Info	
	2	Span Countdown	Info	
	3	Apply Span Gas	Info	
	4	Cal Aborted	Info	
	5	Zero Fault	Info	
	6	Span Fault	Info	
	7	Cal OK	Info	

BYTE	BIT	MEANING	CLASS	DEVICE STATUS BITS SET
3	0	End of Life Warning	Warning	4,7
	1	Sensor Swap Delay	Info	
	2	Change Sensor Fault	Error	
	3	Sensor Power Fault	Error	4,7
	4	Internal Comm Fault	Error	
	5	Cal Sig Enable	Info	
	6	Alert Option Enable	Info	
	7	Relay Fault	Error	
4	0	Alarm 1 Set	Warning	
	1	Alarm 2 Set	Warning	
	2	Alarm 3 Set	Warning	
	3			
	4			
	5			
	6			
	7			

"Not used" bits are always set to 0.

Some bits used in this transmitter indicate device or sensor failure and, therefore, also set bit 7 and bit 4 of the Device Status byte.

These bits are set or cleared by the self-test executed at power up, or following a reset. They are also set (but not cleared) by any failure detected during continuous background self-testing.

Universal Commands

All Universal commands have been implemented in the Ultima Gas Monitor. The Ultima Gas Monitor returns a 7 in the Universal rev to indicate the device is using the expanded 16-bit manufacturer and device codes.

Common-Practice Commands

The following Common Practice commands have been implemented in the Ultima X device:

Table D-6. Supported Commands

COMMAND #	DESCRIPTION
35	Write Range Values
38	Reset “Configuration Changed” flag
40	Enter/Exit Fixed Current Mode (See the following **Warning**)
42	Perform Master Reset
45	Trim DAC Zero
46	Trim DAC Gain
48	Read Additional Device Status
59	Write Number of Response Preambles
71	Lock Device
72	Squawk
80	Read Device Variable Trim Point

⚠ WARNING

The gas monitor will NOT register gas concentration changes on the 4-20 mA signal line if the operator places the unit in Fixed Current Mode. Implement alternate protection measures when the unit is placed in this mode. Make sure the unit is returned to Standard Operational Mode prior to use for gas detection. Failure to follow this warning can result in serious personal injury or loss of life.

Burst Mode

This device supports burst mode.

Catch Device Variable

This Field Device does not support Catch Device Variable.

Table D-7. Device-Specific Commands

The following device-specific commands are implemented in the Ultima Monitor:

COMMAND #	DESCRIPTION
129	Read Sensor Gas Type
130	Read Device RTC
131	Read Alarm Setpoints
132	Read Alarm Control Actions
133	Read Min/Max/Average Values
134	Read Last Cal Date
135	Read Gas Table
136	Read Input Voltage
137	Read Auto Zero Comp
139	Read Sensor Status
140	Read Swap Delay Status
141	Read Cal Signal Status
142	Read Alert Option Status
143	Read Sensor Temperature
144	Read Relay Normal State
173	Write Device RTC
174	Write Alarm Setpoints
175	Write Alarm Control Actions
176	Write Average Interval
177	Write Upper Trim Point
178	Write Gas Table
179	Write Sensor Data sheet Reset
180	Write Sensor Swap Delay Enable
181	Write Cal Signal Enable
182	Write Calibration Mode
183	Write Calibration Abort
184	Write Calibration Step
185	Write Alarm Acknowledge
186	Write Protect Mode
187	Write Alert Option
188	Write Relay Normal State

Command #129: Read Sensor Gas Type

Reads the Gas Type of the sensor currently connected to the Ultima Gas Monitor.

Request Data Bytes

None.

Response Data Bytes

BYTE	FORMAT	DESCRIPTION
0-3	ASCII	Sensor gas type description (see TABLE D-8)

Command #130: Read Device Real Time Clock

Reads the Real Time clock hours and minutes from the Ultima X Gas Monitor.

Request Data Bytes

None.

Response Data Bytes

BYTE	FORMAT	DESCRIPTION
0	Unsigned	RTC Hours
1	Unsigned	RTC Minutes

Command #131: Read Alarm Setpoints

Reads the Ultima X Alarm Setpoint values.

Request Data Bytes

None.

Response Data Bytes

BYTE	FORMAT	DESCRIPTION
0-3	Float	Alarm 1 Setpoint Value
4-7	Float	Alarm 2 Setpoint Value
8-11	Float	Alarm 3 Setpoint Value

Command #132: Read Alarm Control Actions

Reads the Ultima X Alarm Control Actions.

Request Data Bytes

None.

Response Data Bytes

BYTE	FORMAT	DESCRIPTION
0	Bit Enum	Alarm 1 Control Actions (see TABLE D-9)
1	Bit Enum	Alarm 2 Control Actions (see TABLE D-9)
2	Bit Enum	Alarm 3 Control Actions (see TABLE D-9)

Command #133: Read Min, Max, Avg Values

Returns the Ultima minimum, maximum and average values recorded over an average interval. The average interval can be a value of 1 , 8, or 24 hours. For a one-hour interval, the value is updated at the top of each hour. For an eight-hour interval, the values are updated at 800, 1600 and 2400 hours.

Request Data Bytes

None.

Response Data Bytes

BYTE	FORMAT	DESCRIPTION
0-3	Float	Minimum Value
4-7	Float	Maximum Value
8-11	Float	Average Value
12	Unsigned	Average interval (1, 8, or 24)

Command #134: Read Last Cal Date

Returns the Ultima last calibration date of the currently connected sensor.

Request Data Bytes

None.

Response Data Bytes

BYTE	FORMAT	DESCRIPTION
0-2	Unsigned	Last sensor calibration date

Command #135: Read Gas Table

This command returns the Ultima sensor Gas Table currently in use. The Gas Tables are linearization reference tables used with certain sensors to provide accurate response for different gases from the same sensor.

Request Data Bytes

None.

Response Data Bytes

BYTE	FORMAT	DESCRIPTION
0	Unsigned	Gas Table Number (see TABLE D-10)

Command #136: Read Input Voltage Value

Returns the Ultima input supply voltage value. This number should be in the range of 8-30 volts DC.

Request Data Bytes

None.

Response Data Bytes

BYTE	FORMAT	DESCRIPTION
0-3	Float	Input Voltage Value

Command #137: Read Auto Zero Comp Value

Returns the Ultima Automatic Zero Compensation value. This value is accumulated by the device when the sensor reading attempts to drift below zero. This value is used to compensate the actual Zero calibration. The device will attempt to compensate up to 10 counts (display units) before setting the under-range bit.

Command #139: Read Sensor Status message

Returns the Ultima X sensor status message. This is a single byte containing hex codes. This byte is sent from the sensor module to the main processor and passed to the HART communications processor.

Request Data Bytes

BYTE	FORMAT	DESCRIPTION
None		

Response Data Bytes

BYTE	FORMAT	DESCRIPTION
0	Enum	Sensor Status message (See TABLE D-12)

Command #140: Read Swap Delay Status

This command returns the Ultima X sensor swap delay status. This is a single byte containing a 0 if disabled or 1 if enabled. If enabled, the swap delay will hold off a sensor missing error for 1 minute. This hold-off allows a sensor module to be swapped out with a calibrated sensor module without triggering a "sensor missing" alarm and dropping the 4-20 mA to the trouble level.

Request Data Bytes

BYTE	FORMAT	DESCRIPTION
None		

Response Data Bytes

BYTE	FORMAT	DESCRIPTION
0	Enum	Sensor Swap Delay Status (0 –disabled, 1 - enabled)

Command #141: Read Cal Signal Status

This command returns the Ultima X Cal Signal status. This is a single byte containing a 0 if disabled or 1 if enabled. If enabled, the output will be set to 3.75 mA during calibration (21 mA for oxygen). If disabled, the output will track the gas concentration.

Request Data Bytes

BYTE	FORMAT	DESCRIPTION
None		

Response Data Bytes

BYTE	FORMAT	DESCRIPTION
0	Enum	Sensor Cal Signal Status (0 –disabled, 1 - enabled)

Command #142: Read Alert Option Status

This command returns the Ultima X Alert Option Status status. This is a single byte containing a 0 if disabled or 1 if enabled. If enabled, the Alert Option will cause the 4-20 mA to be set to 3.75 mA during calibration of an Oxygen sensor (if the Cal Signal Option is also enabled). If the Alert Option is disabled and the Cal Signal enabled, the output will be set to 21 mA during Oxygen sensor calibration.

Request Data Bytes

BYTE	FORMAT	DESCRIPTION
None		

Response Data Bytes

BYTE	FORMAT	DESCRIPTION
0	Enum	Alert Option Status (0 - disabled, 1 - enabled)

Command #143: Read Sensor Temperature

This command returns the Ultima X Sensor Temperature. This is a single byte containing an integer value representing the temperature returned by the gas sensor. Not all gas sensors have an on-board temperature.

Request Data Bytes

BYTE	FORMAT	DESCRIPTION
None		

Response Data Bytes

BYTE	FORMAT	DESCRIPTION
0	Unsigned	Sensor temperature (°C)

Command #144: Read Relay Normal State

This command returns the Ultima X to the Normal relay state. This is a single byte containing a bit map of the three alarm relays' non alarm states. Not all gas sensors have on-board relays.

Request Data Bytes

BYTE	FORMAT	DESCRIPTION
None		

Response Data Bytes

BYTE	FORMAT	DESCRIPTION
0	Bit 0	Alarm #1 0 = normally de-energized, 1 = normally energized
0	Bit 1	Alarm #2 0 = normally de-energized, 1 = normally energized
0	Bit 2	Alarm #3 0 = normally de-energized, 1 = normally energized

Command #173: Write RTC

Writes the Ultima Real Time Clock hours and minutes values.The real time clock is used to compute the minimum, maximum and average values and to date stamp the last sensor calibration date.

Request Data Bytes

BYTE	FORMAT	DESCRIPTION
0	Unsigned	RTC hours (0-23)
1	Unsigned	RTC minutes (0-59)

Response Data Bytes

BYTE	FORMAT	DESCRIPTION
0	Unsigned	RTC hours (0-23)
1	Unsigned	RTC minutes (0-59)

Command-Specific Response Codes

CODE	CLASS	DESCRIPTION
0	Success	No Command-Specific Errors
1-2		Undefined
3	Error	Parameter too large
4		Undefined
5	Error	Too few data bytes
6		Undefined
7	Error	In write protect mode
8-15		Undefined
16	Error	Access Restricted
17-31		Undefined
32	Error	Busy
33-127		Undefined

Command #174: Write Alarm Setpoints

Writes the Ultima Alarm Setpoint values. The Ultima Gas Monitor uses alarm setpoint values to set alarm status bits in the device. The alarms can be enabled or disabled, set to increasing or decreasing and can be set to latching (see "Command 175: Write Alarm Setpoint Control Actions"). The adjustment range is greater than zero and less than full - scale.

Request Data Bytes

BYTE	FORMAT	DESCRIPTION
0	Unsigned	Alarm Number (1, 2, or 3)
1-4	Float	Alarm Setpoint Value

Response Data Bytes

BYTE	FORMAT	DESCRIPTION
0	Unsigned	Alarm Number (1, 2 or 3)
1-4	Float	Alarm Setpoint Value

Command-Specific Response Codes

CODE	CLASS	DESCRIPTION
0	Success	No Command-Specific Errors
1-2		Undefined
3	Error	Parameter too large
4	Error	Parameter too small
5	Error	Too few data bytes
6		Undefined
7	Error	In write protect mode
8-15		Undefined
16	Error	Access Restricted
17-18		Undefined
19	Error	Invalid device variable index
20-31		Undefined
32	Error	Busy
33-127		Undefined

Command #175: Write Alarm Setpoint Control Actions

Writes the Ultima X Alarm Setpoint Control Actions. The Ultima X Gas Monitor uses alarm setpoint Control Actions to enabled or disabled, set to increasing or decreasing and to set the alarm to latching or non latching.

Request Data Bytes

BYTE	FORMAT	DESCRIPTION
0	Unsigned	Alarm Number (1, 2, or 3)
1	Bit Enum	Alarm Control Action Value (see TABLE D-9)

Response Data Bytes

BYTE	FORMAT	DESCRIPTION
0	Unsigned	Alarm Number (1, 2, or 3)
1	Bit Enum	Alarm Control Action Value (see TABLE D-9)

Command-Specific Response Codes

CODE	CLASS	DESCRIPTION
0	Success	No Command-Specific Errors
1-4		Undefined
5	Error	Too few data bytes
6		Undefined
7	Error	In write protect mode
8-15		Undefined
16	Error	Access Restricted
17-18		Undefined
19	Error	Invalid device variable index
20-31		Undefined
32	Error	Busy
33-127		Undefined

Command #176: Write Average Interval

Writes the Ultima Average Interval. This interval is in hours and is used by the device to determine the collection interval for Minimum, Maximum and Average values. The Average collection interval can be for 1, 8 or 24 hours.

Request Data Bytes

BYTE	FORMAT	DESCRIPTION
0	Unsigned	Average Interval

Response Data Bytes

BYTE	FORMAT	DESCRIPTION
0	Unsigned	Average Interval

Command-Specific Response Codes

CODE	CLASS	DESCRIPTION
0	Success	No Command-Specific Errors
1		Undefined
2	Error	Invalid Selection
3-4		Undefined
5	Error	Too few data bytes
6		Undefined
7	Error	In write protect mode
8-15		Undefined
16	Error	Access Restricted
17-31		Undefined
32	Error	Busy
33-127		Undefined

Command #177: Write Upper Trim Point

Writes the Ultima X Upper Trim or Span point value. The Ultima Gas Monitor uses the Upper trim point value to perform Span calibration. When a Span calibration is performed, the device automatically sets the highest reading obtained to this Span value. The adjustment range on the Upper Trim Point is one display unit to the full-scale limit.

Request Data Bytes

BYTE	FORMAT	DESCRIPTION
0-3	Float	Upper Trim Point (Span) Value

Response Data Bytes

BYTE	FORMAT	DESCRIPTION
0-3	Float	Upper Trim Point (Span) Value

Command-Specific Response Codes

CODE	CLASS	DESCRIPTION
0	Success	No Command-Specific Errors
1-2		Undefined
3	Error	Parameter too large
4	Error	Parameter too small
5	Error	Too few data bytes
6		Undefined
7	Error	In write protect mode
8-15		Undefined
16	Error	Access Restricted
17-31		Undefined
32	Error	Busy
33-127		Undefined

Command #178: Write Gas Table

Writes the Ultima X Gas Table selection. The Ultima Gas Monitor uses the Gas Table value to select a reference table of linearization values for certain sensors.

Request Data Bytes

BYTE	FORMAT	DESCRIPTION
0	Unsigned	Gas Table selection number (see TABLE D-10)

Response Data Bytes

BYTE	FORMAT	DESCRIPTION
0	Unsigned	Gas Table selection number

Command-Specific Response Codes

CODE	CLASS	DESCRIPTION
0	Success	No Command-Specific Errors
1-2		Undefined
3	Error	Parameter too large
4	Error	Parameter too small
5	Error	Too few data bytes
6		Undefined
7	Error	In write protect mode
8-15		Undefined
16	Error	Access Restricted
17-31		Undefined
32	Error	Busy
33-127		Undefined

Command #179: Write Sensor Data Sheet Reset Control

Writes a data sheet reset command to Ultima X Gas Monitor. This command causes the Ultima Monitor to reset the current sensor data sheet to factory default settings. This command will set certain device warning status bits and require the user to re-calibrate the sensor. At current, the only valid number for this command is 1.

Request Data Bytes

BYTE	FORMAT	DESCRIPTION
0	Unsigned	Sensor reset control

Response Data Bytes

BYTE	FORMAT	DESCRIPTION
0	Unsigned	Sensor reset control

Command-Specific Response Codes

CODE	CLASS	DESCRIPTION
0	Success	No Command-Specific Errors
1-2		Undefined
3	Error	Parameter too large
4	Error	Parameter too small
5	Error	Too few data bytes
6		Undefined
7	Error	In write protect mode
8-15		Undefined
16	Error	Access Restricted
17-31		Undefined
32	Error	Busy
33-127		Undefined

Command #180: Write Sensor Swap Delay Enable

This command writes command number to the Ultima X Gas Monitor to enable or disable the two-minute swap delay feature. This device feature enables a two-minute hold-off of the sensor missing fault, allowing the user to “Swap” or change sensor modules without having the 4-20 mA set to the fault condition. The configuration change bit will be set, and the configuration change counter will be incremented.

Request Data Bytes

BYTE	FORMAT	DESCRIPTION
0	Enum	Swap Delay 1 = Enable 0 = Disable

Response Data Bytes

BYTE	FORMAT	DESCRIPTION
0	Enum	Swap Delay 1 = Enable 0 = Disable

Command-Specific Response Codes

CODE	CLASS	DESCRIPTION
0	Success	No Command-Specific Errors
1-2		Undefined
3	Error	Parameter too large
4		Undefined
5	Error	Too few data bytes
6		Undefined
7	Error	In write protect mode
8-15		Undefined
16	Error	Access Restricted
17-31		Undefined
32	Error	Busy
33-127		Undefined

Command #181: Write Cal Signal Enable

This command writes command number to the Ultima X Gas Monitor to enable or disable the Cal signal output. Without the Cal Signal enabled, the 4-20 mA output will follow the gas reading during calibration. With the Cal Signal enabled, the 4-20 mA output will be set to 3.75 ma during calibration and be held there for one minute after calibration has ended to allow the sensor to re-stabilize. Status group 3 indicates the current setting of this mode.

Request Data Bytes

BYTE	FORMAT	DESCRIPTION
0	Enum	Cal Signal 1 = Enable 0 = Disable

Response Data Bytes

BYTE	FORMAT	DESCRIPTION
0	Enum	Cal Signal 1 = Enable 0 = Disable

Command-Specific Response Codes

CODE	CLASS	DESCRIPTION
0	Success	No Command-Specific Errors
1-2		Undefined
3	Error	Parameter too large
4		Undefined
5	Error	Too few data bytes
6		Undefined
7	Error	In write protect mode
8-15		Undefined
16	Error	Access Restricted
17-31		Undefined
32	Error	Busy
33-127		Undefined

Command #182: Write Calibration Mode

This command writes a calibration mode number to the Ultima Gas Monitor. The mode commands initiate a calibration sequence in the device. Device status byte 2 can be monitored to determine the progress of the calibration.

Request Data Bytes

BYTE	FORMAT	DESCRIPTION
0	Enum	Calibration Mode Number (see TABLE D-11)

Response Data Bytes

BYTE	FORMAT	DESCRIPTION
0	Enum	Calibration Mode Number (see TABLE D-11)

Command-Specific Response Codes

CODE	CLASS	DESCRIPTION
0	Success	No Command-Specific Errors
1-2		Undefined
3	Error	Parameter too large
4		Undefined
5	Error	Too few data bytes
6		Undefined
7	Error	In write protect mode
8-15		Undefined
16	Error	Access Restricted
17-31		Undefined
32	Error	Busy
33-127		Undefined

Command #183: Write Calibration Abort

This command writes a calibration Abort command to the Ultima Gas Monitor. The calibration abort command instructs the device to suspend the calibration sequence initiated by the calibration mode command. Valid number for this command is 1.

Request Data Bytes

BYTE	FORMAT	DESCRIPTION
0	Unsigned	Calibration Abort Command number

Response Data Bytes

BYTE	FORMAT	DESCRIPTION
0	Float	Calibration Abort Command number

Command-Specific Response Codes

CODE	CLASS	DESCRIPTION
0	Success	No Command-Specific Errors
1-2		Undefined
3	Error	Parameter too large
4	Error	Parameter too small
5	Error	Too few data bytes
6		Undefined
7	Error	In write protect mode
8-15		Undefined
16	Error	Access Restricted
17-31		Undefined
32	Error	Busy
33-127		Undefined

Command #184: Write Calibration Step

This command writes a calibration Step Command to the Ultima Gas Monitor. The Step command instructs the device to advance to the next step during a manual calibration sequence. Device status byte 2 can be monitored to determine the progress of the calibration. Valid number for this command is 1.

Request Data Bytes

BYTE	FORMAT	DESCRIPTION
0	Unsigned	Calibration Step Number

Response Data Bytes

BYTE	FORMAT	DESCRIPTION
0	Float	Calibration Step Number

Command-Specific Response Codes

CODE	CLASS	DESCRIPTION
0	Success	No Command-Specific Errors
1-2		Undefined
3	Error	Parameter too large
4	Error	Parameter too small
5	Error	Too few data bytes
6		Undefined
7	Error	In write protect mode
8-15		Undefined
16	Error	Access Restricted
17-31		Undefined
32	Error	Busy
33-127		Undefined

Command #185: Write Alarm Acknowledge

This command writes an Alarm Acknowledge command to the Ultima X Gas Monitor. The alarm acknowledge command instructs the device to clear any latched alarms in the device, provided the setpoint level for the alarm has receded. Valid command number is on 1.

Request Data Bytes

BYTE	FORMAT	DESCRIPTION
0	Unsigned	Alarm Acknowledge command number

Response Data Bytes

BYTE	FORMAT	DESCRIPTION
0	Float	Alarm Acknowledge command number

Command-Specific Response Codes

CODE	CLASS	DESCRIPTION
0	Success	No Command-Specific Errors
1-2		Undefined
3	Error	Parameter too large
4	Error	Parameter too small
5	Error	Too few data bytes
6-15		Undefined
16	Error	Access Restricted
17-31		Undefined
32	Error	Busy
33-127		Undefined

Command #186: Write Protect Mode

This command sends a single, unsigned byte to the device. Sending a one puts the device in write protect mode. In write protect mode, all writes and commands are ignored except a command to disable the write protect. Only reads to the device can be made. Sending a disable, releases the device from write protect mode. During write protect mode, all local (Pushbutton) controls are locked out as well.

Request Data Bytes

BYTE	FORMAT	DESCRIPTION
0	Enum	Write protect Mode (0 = disable, 1 = Enable)

Response Data Bytes

BYTE	FORMAT	DESCRIPTION
0	Enum	Write protect Mode (0 = disable, 1 = Enable)

Command-Specific Response Codes

CODE	CLASS	DESCRIPTION
0	Success	No Command-Specific Errors
2	Error	Invalid selection
3-4		Undefined
5	Error	Too few data bytes
6		Undefined
7	Error	In write protect mode
8-15		Undefined
16	Error	Access Restricted
17-31		Undefined
32	Error	Busy
33-127		Undefined

Command #187: Write Alert Option

This command disables or enables the Alert Option on the Ultima X unit. This is a single byte containing a 0 if disabled or 1 if enabled. If enabled, the Alert Option will cause the 4-20 mA to be set to 3.75 mA during calibration of an Oxygen sensor (if the Cal Signal Option is also enabled). If the Alert Option is disabled and the Cal Signal enabled, the output will be set to 21 mA during Oxygen sensor calibration.

Alert Options

	ON	OFF
Calibration	Alert relay de-energized	Alert relay energized
Power on RESET (Countdown)	Alert relay de-energized	Alert relay energized
4 - 20 CAL mA (Oxygen)	3.75 mA	21 mA
4 -20 POR mA (Oxygen)	3.75 mA	21 mA

Request Data Bytes

BYTE	FORMAT	DESCRIPTION
0	Enum	Alert Option Mode (0 - disabled, 1 - enabled)

Response Data Bytes

BYTE	FORMAT	DESCRIPTION
0	Enum	Alert Option Mode (0 - disabled, 1 - enabled)

Command-Specific Response Codes

CODE	CLASS	DESCRIPTION
0	Success	No Command-Specific Errors
2		Undefined
3	Error	Parameter too large
4		Undefined
5	Error	Too few data bytes
6		Undefined
7	Error	In write protect mode
8-15		Undefined
16	Error	Access Restricted
17-31		Undefined
32	Error	Busy
33-127		Undefined

Command #188: Write Relay Normal State

This command sets the Ultima X Normal relay state. This is a single byte containing a bit map of the three alarm relays' non alarm states. Not all gas sensors have on-board relays.

Request Data Bytes

BYTE	FORMAT	DESCRIPTION
0	Bit 0	Alarm #1 0 = normally de-energized, 1 = normally energized
0	Bit 1	Alarm #2 0 = normally de-energized, 1 = normally energized
0	Bit 2	Alarm #3 0 = normally de-energized, 1 = normally energized

Response Data Bytes

BYTE	FORMAT	DESCRIPTION
0	Bit 0	Alarm #1 0 = normally de-energized, 1 = normally energized
0	Bit 1	Alarm #2 0 = normally de-energized, 1 = normally energized
0	Bit 2	Alarm #3 0 = normally de-energized, 1 = normally energized

Command-Specific Response Codes

CODE	CLASS	DESCRIPTION
0	Success	No Command-Specific Errors
1-4		Undefined
5	Error	Too few data bytes
6		Undefined
7	Error	In write protect mode
8-15		Undefined
16	Error	Access Restricted
17-31		Undefined
32	Error	Busy
33-127		Undefined

Table D-8. Gas Type Descriptions

GAS TYPE	DESCRIPTION	GAS TYPE	DESCRIPTION
CO	Carbon Monoxide		
O_2	Oxygen		
COMB	Combustible-pellistor		
XiIR	Infrared Combustible		
H_2S	Hydrogen Sulfide		
Cl	Chlorine		
Cl_2	Chlorine Dioxide		
NH_3	Ammonia		

Table D-9. Alarm Control Actions

Bit0	Alarm Enable	1 = enabled, 0 = disabled
Bit1	Alarm Direction	1 = increasing, 0 = decreasing
Bit2	Alarm Latch Status	1 = latching , 0 = non-latching
Bit3-7	Unused	

Table D-10. Gas Table Values

TABLE	DESCRIPTION
1	Methane
2	Propane
3	Ethane
4	n-Butane
5	n-Pentane
6	n-Hexane
7	Cyclopentane
8	Ethylene
21	Acetylene
47	5000 PPM CO_2
48	5% CO_2
49	2% CO_2
50	Custom
250	Unused

Table D-11. Calibration Modes

MODE #	DESCRIPTION
0	Initiate Zero Sensor sequence
1	Initiate Standard calibration sequence
2	Initiate Initial calibration sequence
3	Initiate Manual (stepped) calibration sequence

Table D-12. Sensor Status Codes

CODE	DESCRIPTION
0x01	Flash Fault
0x05	Ram Fault
0x07	Pellement Fault
0x0A	Data Sheet Fault
0x1E	Power Fault
0x1F	IR Factory Mode
0x20	IR Lamp Fault
0x28	EEPROM R/W Fault
0x2D	EEPROM Checksum Fault
0x2F	Sensor Missing Fault
0x3A	Negative Power Supply Fault
0x3B	IR Reference Fault
0x3C	Temperature Fault
0x3D	IR Analyte Fault
0x3E	IR Low Signal Fault
0x3F	IR Parameter Fault
0X40	Calibration Fault
0x41	Zero Mode
0x42	Span Mode
0x7C	Sleep Mode
0x7D	Warm Up Mode
0x7E	Power On Reset Mode
0x7F	Sensor OK

Performance

Typical sampling rates are shown in the following table.

Table D-13. Sampling Rates

Gas Samples	4 per second
PV digital value calculation	5 per second
Analog output update	5 per second

Power-Up

On power-up, the transmitter goes through a self-test procedure (see Chapter 2, "Initial Start-up"), and a sensor warm up and initialization period which takes approximately 30 seconds. During this period, the device will not respond to HART commands, and the analog output is set at 3.75 mA.

When the self-test is satisfactorily completed, and the sensor initialized, the PV value is set, and the analog output moves to a value representing the measurement. The rate of this calculation is limited by an internal filter damping time. Only after the PV and SV are correctly set, will the device respond to HART commands.

If the self-test fails, all live measurement data (PV, current and percent of range) are set to "Not A Number", and the analog output is set to the configured malfunction-indicating current. The device will attempt to respond to HART commands.

Fixed-current mode is cancelled by power loss.

Reset

Command 42 ("Device Reset") causes the device to reset its microprocessor. The resulting restart is identical to the normal power-up sequence. (See Chapter 2, "Initial Start-up".)

Self-Test

The self-test procedure is executed at power-up or following Command 42 ("Device Reset"). Some self-test procedures are continuously run in a background mode. The self-test includes:

- Microprocessor
- RAM

- Program ROM
- Configuration storage EEPROM
- Sensor communications
- Data sheet integrity
- Internal communications.

This self-test takes about 10 seconds. During self-test, following power-up or reset, the analog output is set to 3.75 mA and the device does not respond to HART commands.

During self-test run in background mode, the analog output updates continuously and the device responds normally to HART commands.

Continuous self-testing is part of the normal device operation. The same checks are made, but over a longer period between measurement function cycles.

Table D-14. Command Response Times

Minimum	20 ms
Typical	50 ms
Maximum	100 ms *

* During self-test following a power up reset or reset command, the device may take up to 10 sec to respond.

Busy and Delayed-Response

The transmitter may respond with "busy" status if a further command is received while self-test or certain command functions are underway.

Delayed-response is not used.

Long Messages

The largest data field used is in the response to Command 21: 34 bytes including the two status bytes.

Non-Volatile Memory

EEPROM is used to hold the device’s configuration parameters. Both the main board and sensor module contain EEPROM devices. New data is written to this memory on execution of certain write commands, during calibration operations and during normal operation.

Modes

Fixed current mode is implemented, using Command 40. This mode is cleared by power loss or reset.

Write Protection

Write-protection is provided by command 186. When in the Write Protect mode, all read commands are available, no "write" or "command" commands are accepted.

Damping

Damping is internally-fixed, affecting only the PV and the loop current signal. There is no user-settable damping control.

Capability Checklist

Table D-15. Capability Checklist

Manufacturer, model and revision	MSA , Ultima, rev. 2
Device type	Transmitter
HART revision	7
Device Description available	Yes
Number and type of sensors	1
Number and type of actuators	0
Number and type of host side signals	1: 4 - 20mA analog
Number of Device Variables	13
Number of Dynamic Variables	1
Mappable Dynamic Variables?	No
Number of common-practice commands	11
Number of device-specific commands	31
Bits of additional device status	32
Alternative operating modes?	No
Burst mode?	Yes
Write-protection?	Yes

Default Configuration

Table D-16. Default Configuration

PARAMETER	DEFAULT VALUE
Lower Range Value	0
Upper Range Value	Sensor dependent
PV Units	Sensor dependent
Sensor type	various
Number of wires	3
Damping time constant	N/A
Fault-indication jumper	Sensor dependent
Write-protect mode	write enabled
Number of response preambles	5
Alarms	Enabled

Calibration Using a HART® Communicator

Sensor Zero Selection Menu

Select Sensor Calibration from the "Sensor Trim" Menu

Sensor calibration or “trim” functions are available from several locations in the menu structure. See FIGURE D-8 for a view of this selection menu.

First warning screen

Once the sensor calibration feature is selected, a warning message displays to indicate that the 4-20 mA output should be disabled from any automatic control loop to prevent false action during calibration. The user must acknowledge this screen to continue. See FIGURE D-9 for a view of this warning screen. Optionally, the user may abort the process at this screen.

Second warning screen

After acknowledgement of the control loop message, a second warning message displays, informing the user that sensor calibration will be changed. The user can abort the procedure at this time or acknowledge the screen to proceed. See FIGURE D-10 for a view of this screen.

Zero Sensor function select screen

Upon acknowledgement of the calibration change warning screen, a calibration function selection screen appears. To zero the sensor, select

the “Sensor Zero” function and acknowledge the screen. See FIGURE D-11 for a view of this screen.

Calibration initiated screen

Once a calibration selection function is selected, the command is sent to the device. A status messages is then returned to indicate the progress. The first status message should indicate that the calibration sequence has started. This screen also shows the sensor value, units and type information. No action is required as it is only a five-second information screen and advances automatically. The user may abort the process at this time. See FIGURE D-12 for a view of this screen.

Selection confirmation screen

After the initiating screen displays for five seconds, a second information screen displays. This screen displays for five seconds and provides the user confirmation of the current calibration selection. No action is required at this screen, but the user may press the ABORT button to stop the process. See FIGURE D-13 for a view of this screen.

Sensor Zero countdown screen

Once the information screens are displayed, the device should start sending back a status byte to indicate calibration progress. The first status message should be the 30-second device countdown message. This message prompts user to start applying Zero gas if necessary. This screen also displays the current gas reading from the sensor.(This screen is skipped for the Oxygen sensor as it uses an electronic Zero). This message displays during the 30-second countdown and the user can abort the process at any time. See FIGURE D-14 for a view of this screen message.

Zero Adjustment screen

After the 30-second countdown screen (or the selection confirmation screen for an Oxygen sensor), the device should send back a status message indicating that the device is attempting to adjust the internal calibration. The user is instructed to apply Zero gas (or room air) at this time. The device waits for a stable reading to occur and then saves the zero calibration data automatically. The user can abort the process at any time by selecting the ABORT button. See FIGURE D-15 for a view of this screen.

Calibration completion message

Following a successful zero calibration, an information screen displays, indicating the calibration process has completed. This is a five-second, timed message and requires no user input. See FIGURE D-18 for a sample view of this information screen.

Calibration gas reminder screen

Once the device has performed a successful Zero function and stored the calibration information, it returns a calibration OK message. This causes a series of calibration closure messages to appear. The first closure message is a reminder to disconnect any calibration gases from the device. See FIGURE D-19 for a sample view of this message screen. The user can abort this screen, but the only affect at this time would be that the last information screen will not display.

Loop control reminder message

The final information screen following a calibration procedure is a reminder to return the loop to automatic control. See FIGURE D-20 for a sample of this screen.

Standard Calibration Procedures
Standard Zero/Span Calibration Selection Menu

Select Sensor Calibration from the Sensor Trim Menu

Sensor calibration or “trim” functions are available from several locations in the menu structure. See FIGURE D-6 for a view of this selection menu.

First warning screen

Once the sensor calibration feature is selected, a warning message displays to indicate that the 4-20 mA output should be disabled from any automatic control loop to prevent false action during calibration. The user must acknowledge this screen to continue. See section FIGURE D-7 for a view of this warning screen. Optionally, the user may abort the process at this screen.

Second warning screen

After acknowledgement of the control loop message, a second warning message displays indicating that sensor calibration is changed. The user can abort the procedure at this time or acknowledge the screen to proceed. See FIGURE D-8 for a view of this screen.

Standard Calibration function select screen

Upon acknowledgement of the calibration change warning screen, the user is presented with a calibration function selection screen. To perform a standard Zero/Span of the sensor, select the “Zero/Span” function and acknowledge the screen. See FIGURE D-9 for a view of this screen.

Calibration initiated screen

Once a calibration selection function is selected, the command is sent to the device. A status message is then returned to indicate the progress. The first status message should indicate that the calibration sequence has started. This screen also shows the sensor value, units and type information. No action is required for this screen as it is only a five-second information screen and will advance automatically. The user may abort the process at this time. See FIGURE D-10 for a view of this screen. The red and green LEDs on the main board blink momentarily to indicate the device has begun the procedure.

Selection Confirmation Screen

After the initiating screen displays for five seconds, a second information screen displays. This screen also displays for five seconds and provides confirmation of the current calibration selection. No action is required at this screen, but the user may press the ABORT button to stop the process. See FIGURE D-11 for a view of this screen.

Sensor Zero Countdown screen

Once the information screens are displayed, the device should start sending back a status byte to indicate the progress of the calibration. The first status message should be the 30-second device countdown message prompting the user to start applying Zero gas if necessary. This screen also displays the current gas reading from the sensor. (This screen is skipped for the Oxygen sensor, as it uses an electronic Zero). This message displays during the 30-second countdown; the user can abort the process at any time. See FIGURE D-12 for a view of this screen message. The red LED is OFF and the green LED is blinking on the main circuit board to indicate the start of the Zero procedure.

Zero Adjustment screen

After the 30-second countdown screen (or the selection confirmation screen for an Oxygen sensor), the device should send back a status message indicating that the device is attempting to adjust the internal calibration. The user is prompted to apply Zero gas (or room air) at this time. The device waits for a stable reading to occur and then saves the zero calibration data automatically. The user can abort the process at any time by selecting the ABORT button. See FIGURE D-13 for a view of this screen.

Sensor Span countdown screen

After successful completion of the sensor Zero procedure, the device automatically steps to the Span routine and displays an information screen indicating the Span procedure has started. This is a 30-second

countdown wait for gas connection and transport. The user is prompted to start applying the Span calibration gas at this time. (For a 0-25% Oxygen sensor, the sensor can be spanned using room air.) See FIGURE D-14 for a sample view of this screen. The red LED is ON solid and the green LED is blinking on the main board to indicate the start of the Span procedure.

Adjusting Span screen

After the 30-second Span initialization, a Span adjustment screen displays and continually updates with the gas (PV) reading, units and type information. Once the device detects a stable reading, the data is stored automatically and the user is notified of the completion status. See FIGURE D-15 for a sample view of the Span adjustment screen. The user can abort the procedure at any time and the prior calibration data is restored.

Calibration completion message

Upon successful completion of the SPAN procedure, an information screen displays. See FIGURE D-16 for a sample completion screen. This is a five-second information screen; no user action is required.

Calibration gas reminder screen

Following the Calibration completion screen, another information screen is presented to inform the user to disconnect any calibration gas from the device. This is a five-second timed message; no user acknowledgement is required. See FIGURE D-17 for a view of this information screen.

Loop control reminder message

The final calibration screen is an information screen prompting the user to reconnect the sensor output to any automatic control process that was disconnected at the start of the procedure. The user is required to acknowledge this screen. See FIGURE D-18 for a sample view of this screen.

Initial Calibration Procedures

Initial Calibration Selection Menu

Initial calibration is selected in a manner similar to the standard Zero/Span calibration procedure and the steps are similar (except the function selection should be “Initial Cal”). Initial calibration should be run when a new sensor is connected to the unit or when a standard Zero/Span procedure will not clear a fault condition (such as when the wrong Span gas is used). The Initial Calibration function allows the device to make accurate decisions for the CHANGE SENSOR and CAL FAULT functions.

Initial Calibration function select screen

Upon acknowledgement of the calibration change warning screen (see "Second warning screen" earlier in this chapter), a calibration function selection screen appears. To perform an Initial Calibration of the sensor, select the “Initial Cal” function and acknowledge the screen. See FIGURE D-4 for a view of this screen. Refer back to "Standard Calibration Procedures" for the complete calibration procedure.

User (Stepped) Calibration Procedures

User Calibration Selection Menu

User calibration is selected in a manner similar to the standard Zero/Span calibration procedure; the steps are similar, except the function selection should be “User Cal”. Normal calibrations are performed and stepped automatically by the device while prompting the user to apply the required calibration gas.

This is a timed function and, if the calibration gas is not applied in time or the reading does not stabilize within the given timeout period (windy conditions, duct mount, high sensitivity sensor modules, extended gas sample lines, etc.), it will timeout and send a “Cal Fault” status. User calibration allows the user to manually step through the Zero and Span calibrations and decide when the reading has reached optimum stability.

User Calibration step screens

User calibration is similar to the standard procedures provided earlier under "Standard Calibration Procedures", except that the automatic adjustment screens described in "Zero Adjustment screen" and "Adjusting Span screen" sections are replaced with a Step/Refresh screen allowing the user to review the readings and decide when to advance the procedure (see FIGURES D-1 and D-2).

Zero cal step screen

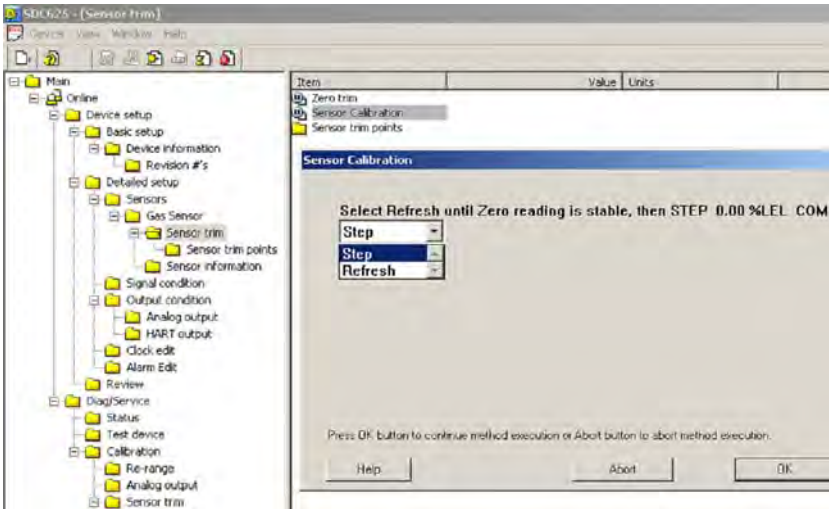

Figure D-1. Zero cal step screen

Span cal step screen

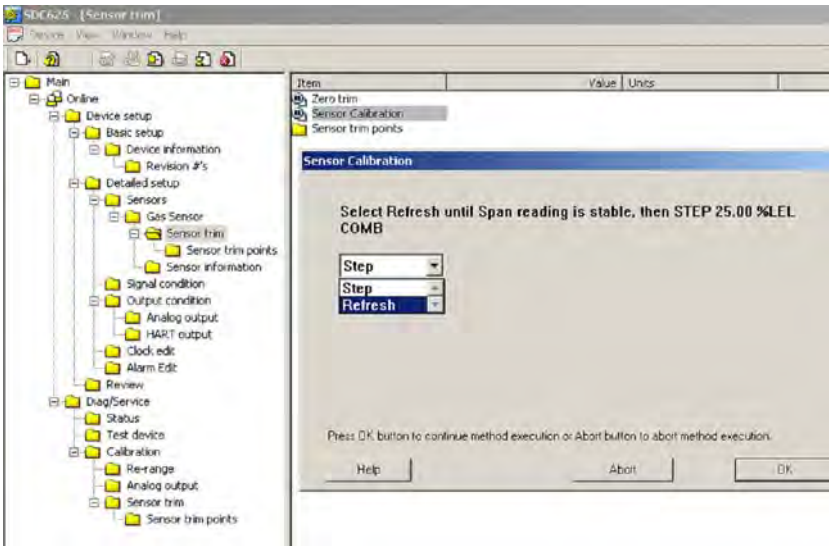

Figure D-2. Span cal step screen

Sample Calibration Display Screens

HART DDL-based calibration display screens

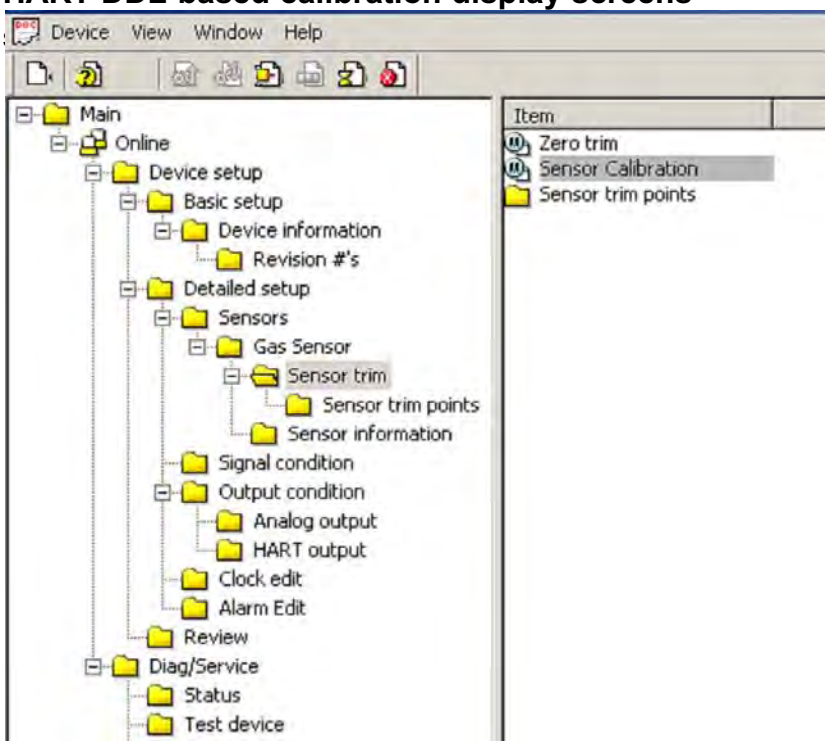

Figure D-3. Select Sensor Calibration from the Sensor Trim Menu

First warning screen

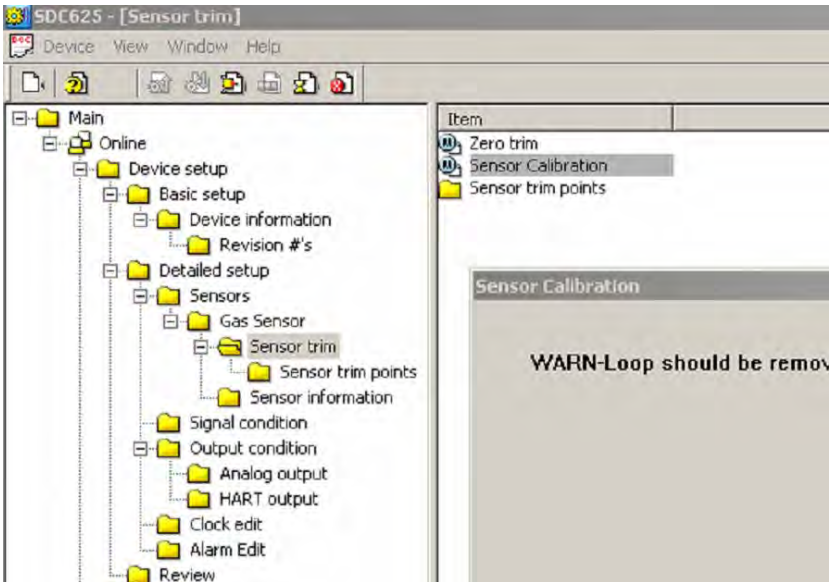

Figure D-4. First Warning screen

Second warning screen

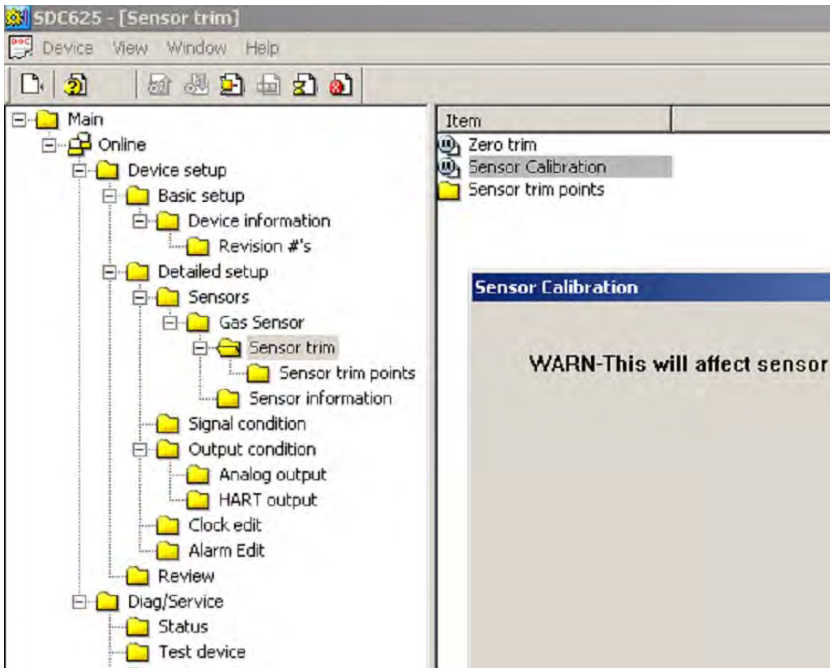

Figure D-5. Second Warning screen

Standard Calibration function select screen

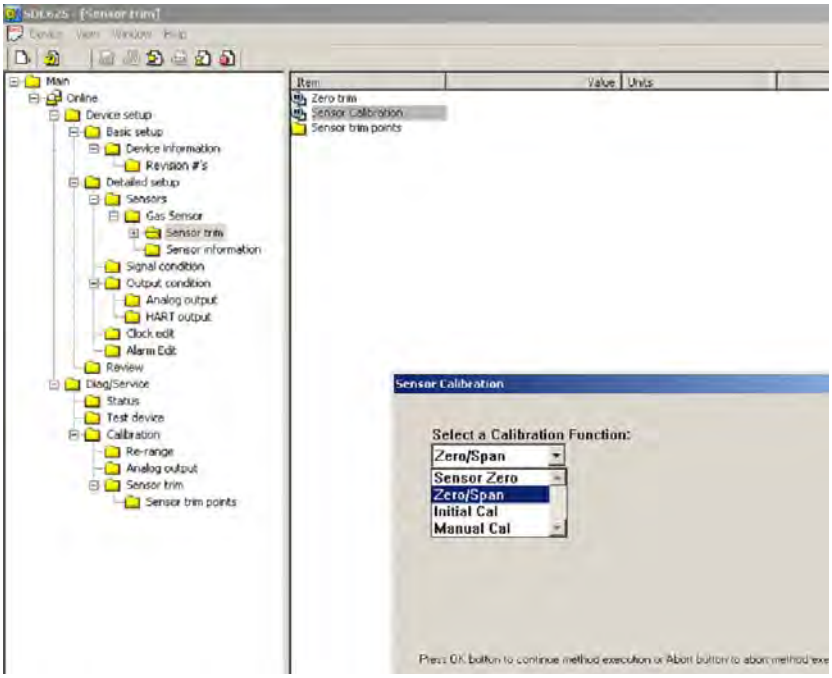

Figure D-6. Standard Calibration function select screen

Calibration initiated screen

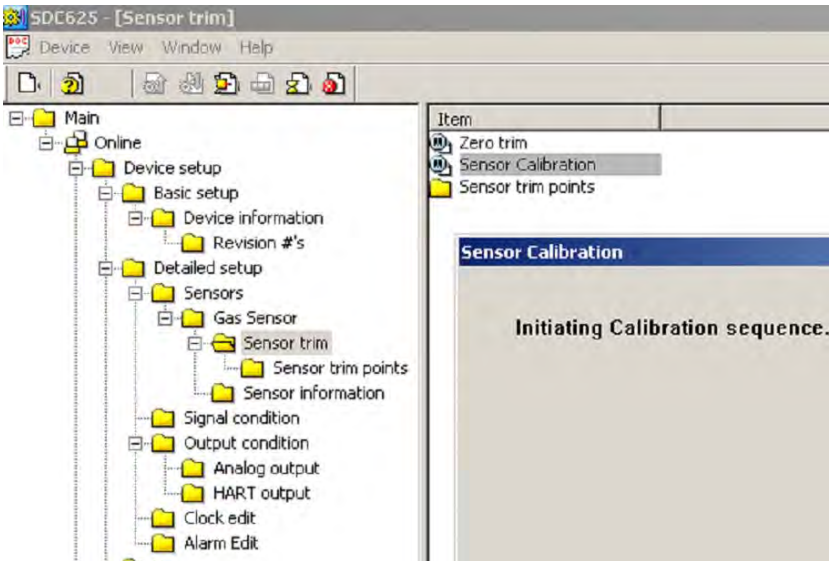

Figure D-7. Calibration initiated screen

Selection Confirmation Screen

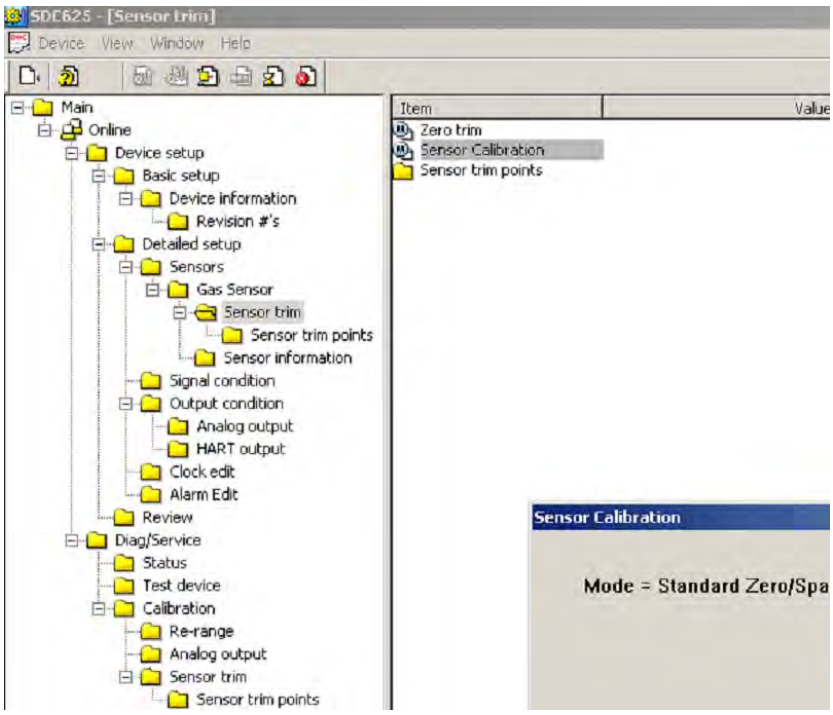

Figure D-8. Selection Confirmation screen

Sensor Zero Countdown screen

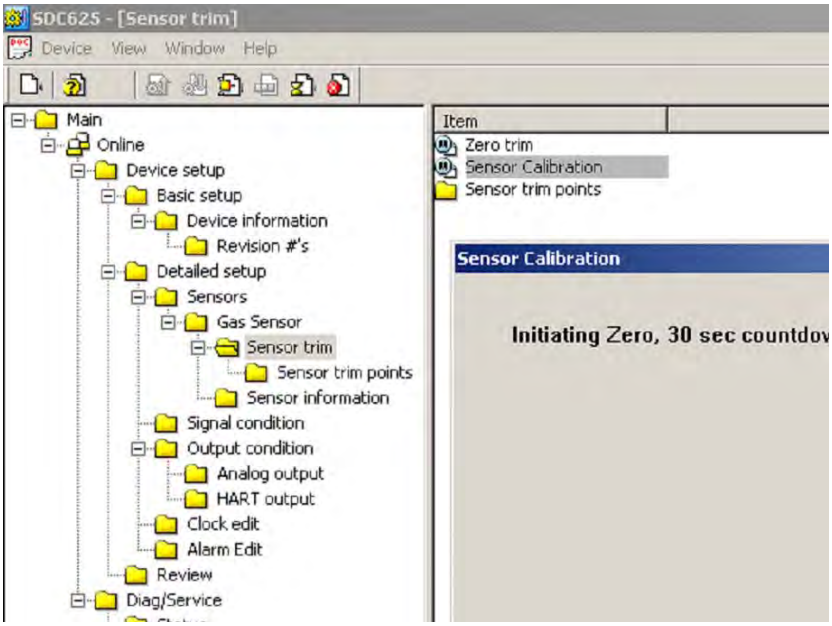

Figure D-9. Sensor Zero Countdown screen

Zero Adjustment screen

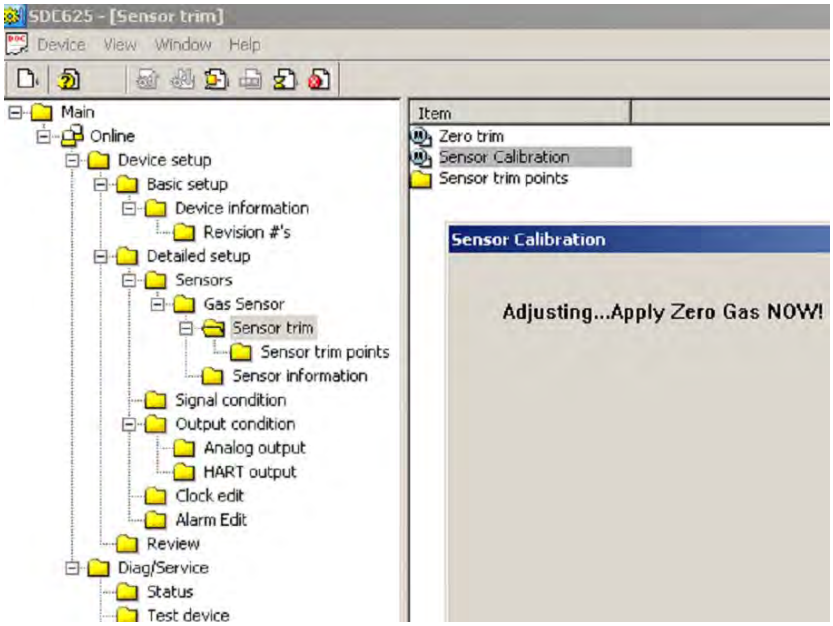

Figure D-10. Zero Adjustment screen

Span countdown screen

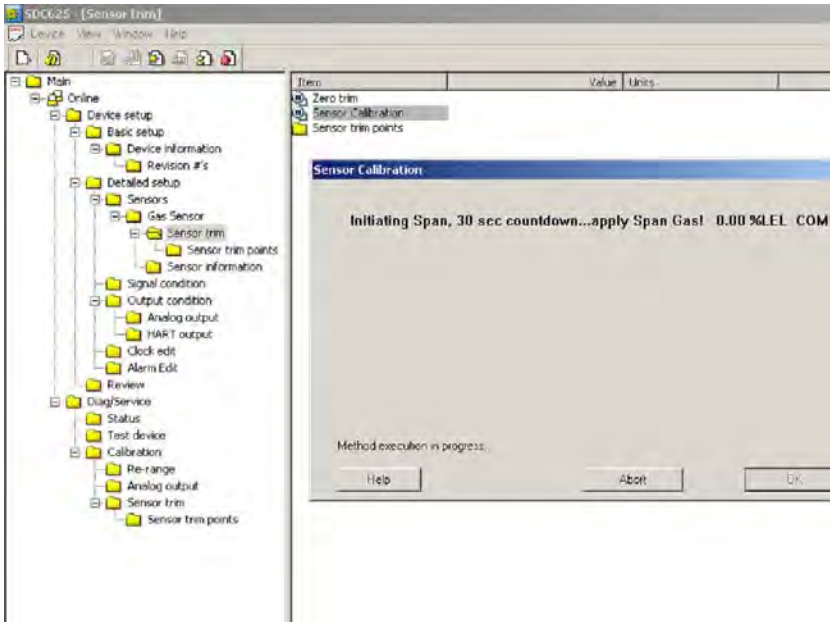

Figure D-11. Span Countdown screen

Adjusting Span screen

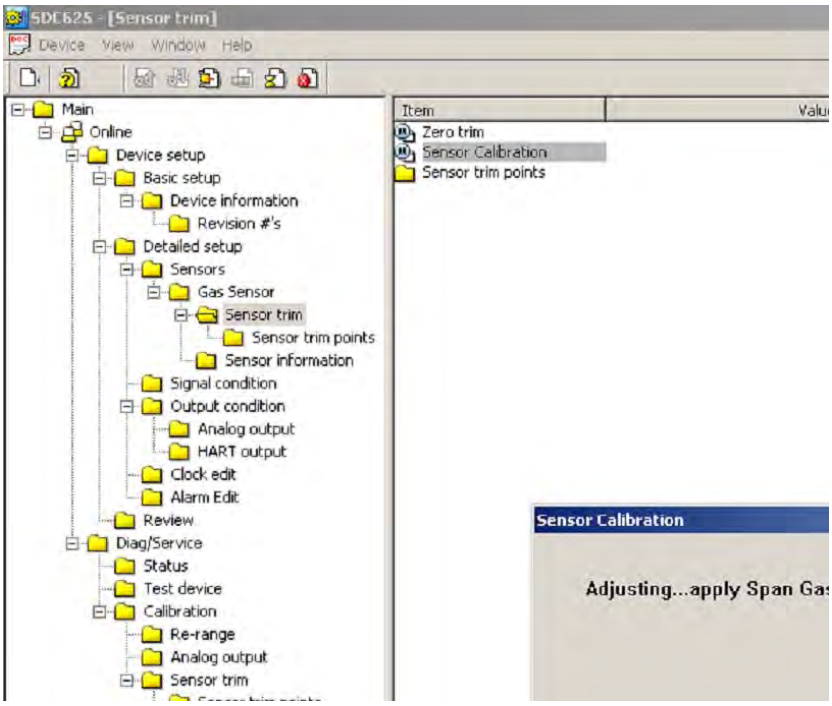

Figure D-12. Adjusting Span screen

Calibration completion message

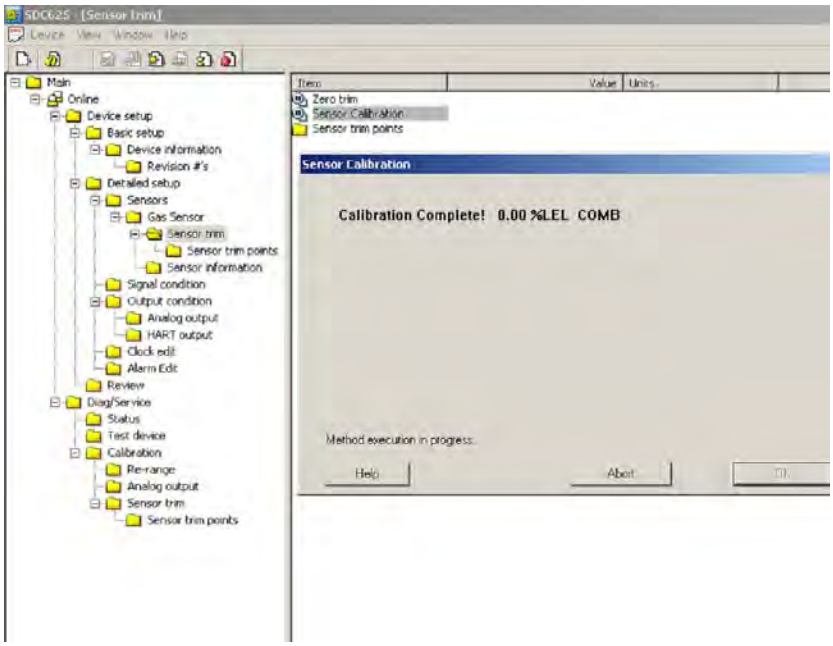

Figure D-13. Calibration Completion message

Calibration gas reminder screen

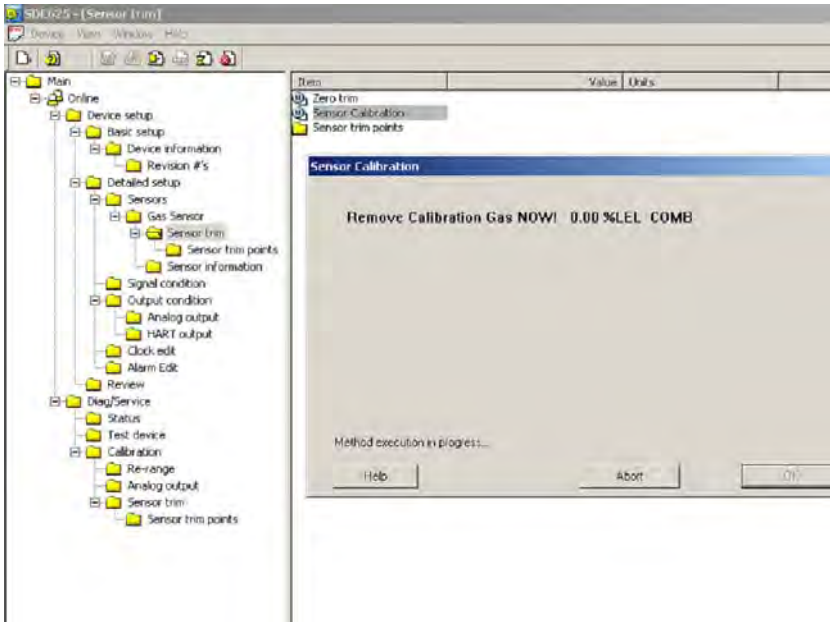

Figure D-14. Calibration Gas Reminder screen

Loop control reminder message

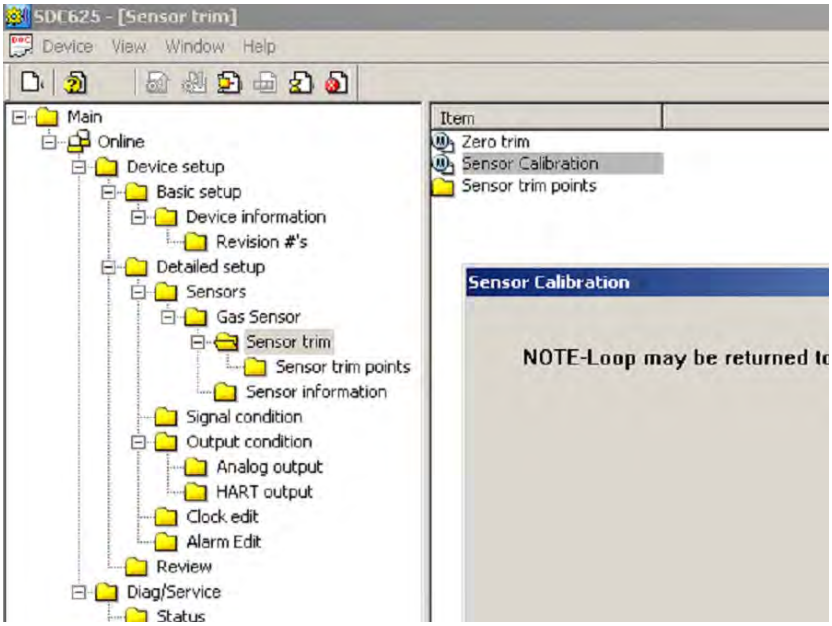

Figure D-15. Loop Control Reminder message

Troubleshooting

Fault indications

Span Fault

This fault can occur if the sensor is in cal mode and the required SPAN gas is not applied to the sensor at the indicated time or within the timeout period. The 4-20 mA returns the measured gas value based upon the last successful calibration parameters. This fault sets several status flags in the digital output to indicate that an error has occurred. The current calibration status can be observed by right-clicking on status group 2 to expand it as shown in FIGURE D-16.

Other possible cause for a Span Fault could be the use of an incorrect Span gas or improperly set PV Upper Trim point (Span) setting. The Trim (calibration) point information can be viewed from the sensor trim points menu as shown in FIGURE D-17.

Span faults can also be caused by a bad sensor, sensor at end-of-life, or a sensor that is too far out of calibration for the Standard Zero/ Span procedure to make the adjustment. An attempt to Initial Cal the sensor may be able to correct the calibration; otherwise, the sensor must be replaced. Additional sensor status can be obtained by right-clicking on status group 3 to expand it as shown in FIGURE D-18.

Calibration status screen

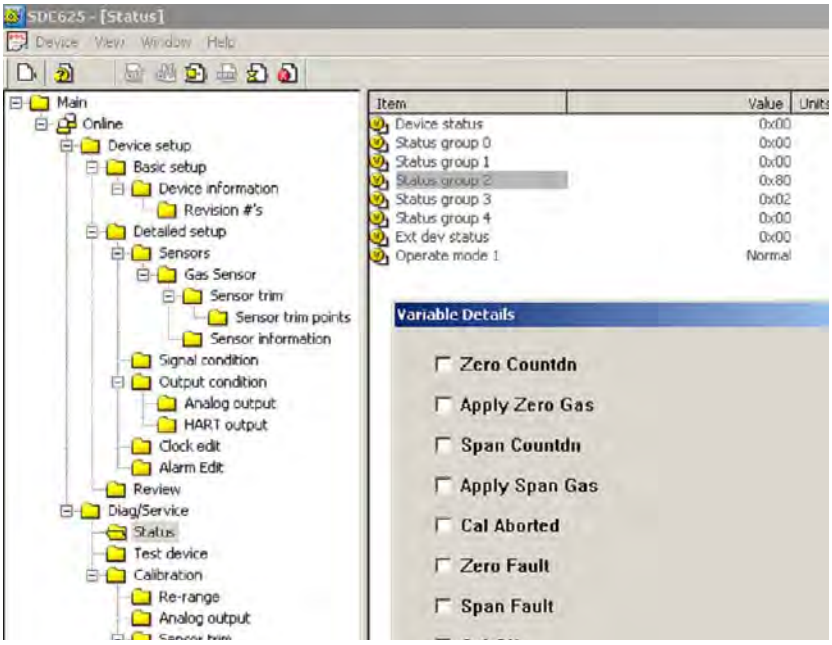

Figure D-16. Calibration Status screen

Sensor trim point screen

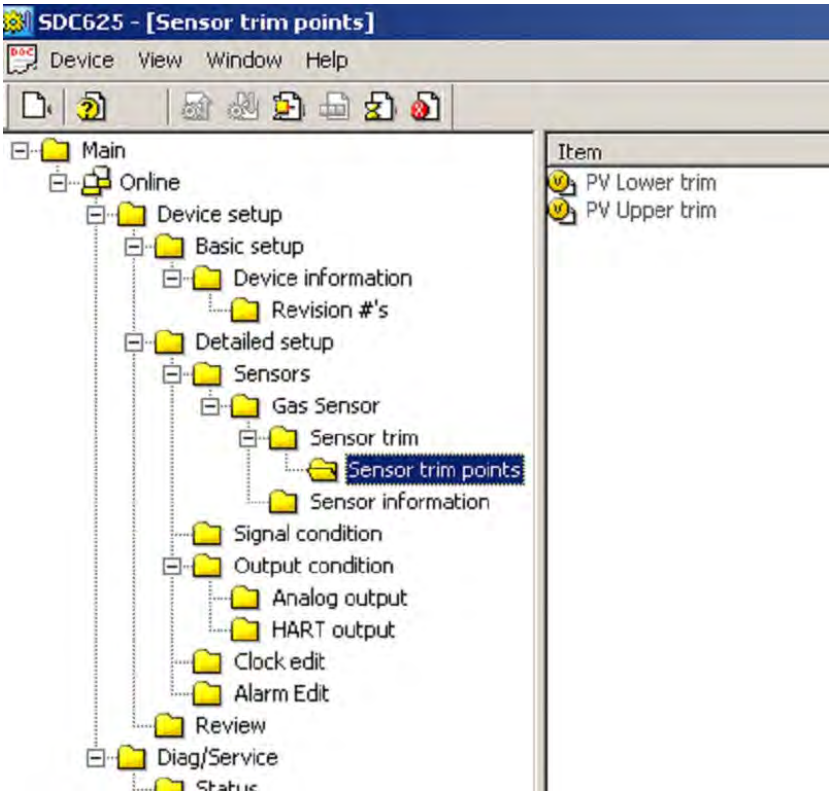

Figure D-17. Sensor Trim Point screen

Additional Sensor status screen

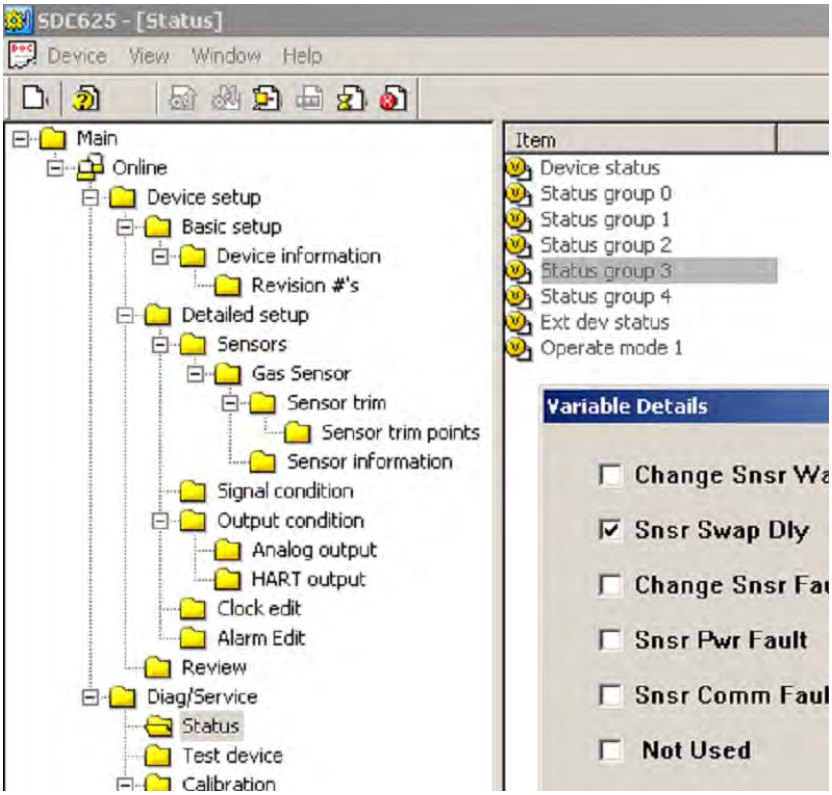

Figure D-18. Additional Sensor Status screen

Zero Fault

The Zero Fault can be caused by a faulty sensor, calibration out of the Standard Zero/Span calibration range, sensor in change, sensor fault or attempting to zero the sensor with Span gas applied. The application of Zero gas should be checked and the sensor status (as defined in FIGURES D-16 and D-18) verified if this fault occurs.

Calibration Aborted

User calibration abort or sensor calibration faults can cause a calibration process to abort. Status group 2 as shown in FIGURE D-16 can be viewed to determine if the abort was caused by a cal fault. Status group 2 can be expanded by right-clicking the selection as shown in FIGURE D-19 to provide additional information (also see FIGURE D-16).

Device status screen

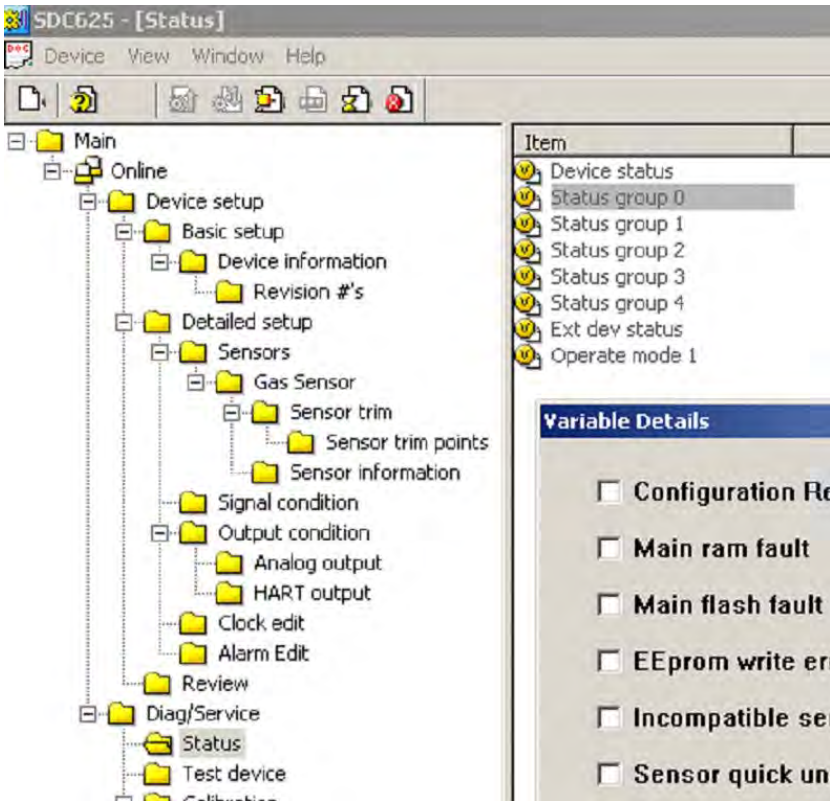

Figure D-19. Device Status screen

MODELS 224XST, 225XST, AND 225XST-I

INSTALLATION AND SERVICE INSTRUCTIONS FOR FEDERAL MODELS 224XST, 225XST, AND 225XST-I FOR USE IN HAZARDOUS LOCATIONS

Address all communications and shipments to:

FEDERAL SIGNAL CORPORATION
Electrical Products Division
Service Department
2645 Federal Signal Drive
University Park, IL 60466-3195

INSTALLATION AND SERVICE INSTRUCTIONS FOR FEDERAL MODEL 224XST, 225XST AND 225XST-I FOR USE IN HAZARDOUS LOCATIONS

⚠ SAFETY MESSAGE TO INSTALLERS, USERS AND MAINTENANCE PERSONNEL

It is important to follow all instructions shipped with this product. This device is to be installed by a trained electrician who is thoroughly familiar with the National Electrical Code and/or Canadian Electrical Code and will follow the NEC and/or CEC Guidelines as well as local codes.

This device should be considered a part of the warning system and not the entire warning system.

The selection of the mounting location for the device, its controls and the routing of the wiring are to be accomplished under the direction of the facilities engineer and the safety engineer. In addition, listed below are some other important safety instructions and precautions you should follow:

- Read and understand all instructions before installing or operating this equipment.
- Never alter the unit in any manner. Safety may be compromised if additional openings or other alterations are made to the unit.
- Do not connect this light to the system when power is on.
- After installation, ensure that the setscrew and threaded joints are properly tightened.
- Keep unit tightly closed when in operation.
- After testing is complete; provide a copy of this instruction sheet to all operating personnel.
- Establish a procedure to routinely check the light installation for integrity and proper operation.

Failure to follow all safety precautions and instructions may result in property damage, serious injury, or death to you or others.

I. GENERAL.

The Model 224XST, 225XST and 225XST-I Strobe Lights are Visual Signaling Devices intended for hazardous locations. The units are UL Listed Visual Signal Appliances for Hazardous Locations for indoor/outdoor use. Underwriters Laboratories has investigated the Models 224XST, 225XST and 225XST-I to ensure that they comply with the TYPE 4X (watertight and corrosion resistant) and IP66 (dust-tight and protection against heavy seas) enclosure requirements.

The Models 224XST and 225XST-I are available in 24VDC. The Model 225XST is available in 12-24VDC, 120 VAC at 50/60 Hz and 230-240VAC at 50/60 Hz. The Model 224XST is also available in 120VAC at 50/60 Hz and 230-240VAC at 50/60 Hz.

II. INSTALLATION.

A. *Unpacking*.

After unpacking the unit, examine it for damage that may have occurred in transit. If the equipment has been damaged, do not attempt to install or operate the

unit. File a claim immediately with the carrier, stating the extent of damage. Carefully check all envelopes, shipping labels and tags before removing or destroying them.

B. *Mounting*.

NOTE

To comply with the Type 4X and IP66 enclosure requirements, the strobe light must be mounted in the DOME UP position.

The Model 224XST, 225XST and 225XST-I should be installed per the NFPA 70 & 72, STATE and LOCAL CODES and should only be performed with the approval of the authority having jurisdiction.

Pipe Mounting.

The Model 224XST, 225XST and 225XST-I can be mounted on 1/2-inch or 20 mm pipe. The conduit run from the device to the splice box shall not be longer than 10 inches. If metric threads are provided, the enclosure bottom will be identified with a "M20" marking. Mounting hardware and installation details are left to the installer.

NOTE

To prevent the connection from loosening, tighten the fixture to a MINIMUM torque of 5 ft.-lbs. (6.8 N m) after threading in onto the pipe.

C. *Electrical Connections.*

⚠WARNING

To avoid electrical shock hazards, do not connect wires when power is applied.

For four wire models, when installed, all four wires must be terminated. Failure to terminate both sets of wires (Black/red, or Black/White) will result in a shock or fire hazard.

1. AC Models.

NOTE

The 120 or 230-240 Vac Strobe units are designed to operate on both 50 and 60 Hz electrical power. Special modifications are NOT required for the two different AC line frequencies.

The 224XST AC units are provided with five leads; two black, two white, and one green/yellow. To achieve electrical supervision connect one black to the phase side of the incoming power source and the other black lead to the phase side of the outgoing power. Then connect one white lead to the common (neutral) side of the incoming power source and the other white lead to the common (neutral) side of the outgoing power. Connect the green/yellow lead to earth ground.

The 225XST AC units are provided with three leads; one black, one white, and one green/yellow. Connect the black lead to the phase side of the AC power source. Connect the white lead to the common (neutral) side of the AC power source. Connect the green/yellow lead to earth ground.

2. DC Models.

⚠CAUTION

The DC units are polarity sensitive, and MAY BE DAMAGED by incorrect electrical hookup. When connecting the DC strobe unit to the voltage supply lines, POLARITY MUST BE OBSERVED. In addition, damage will result if the voltage rating of the model is exceeded.

The Model 224XST DC units are provided with five leads; two red, two black and one green/yellow. To achieve electrical supervision, connect one red (+) lead to the positive side of the incoming power source and the other red (+) lead to the outgoing power source. Then connect one black (-) lead to the negative side of the incoming power source and the other black (-) lead to the negative side of the outgoing power source. If required local building codes, connect the earth ground to the grounding screw located in the mounting hood.

The Model 225XST and 225XST-I, DC units are provided with three leads; one red, one black and one green/yellow. Connect one red (+) lead to the positive side (+) power source terminal and the black (-) lead to the outgoing power source. Then connect one black (-) lead to the negative (-) power source terminal. If required local building codes, connect the earth ground to the grounding screw located in the mounting hood.

III. MAINTENANCE.

⚠WARNING

To prevent receiving an electrical shock, disconnect the fixture from the supply circuit before opening. High voltages are present inside the light assembly. Wait at least 5 minutes after disconnecting power before servicing this unit.

⚠ SAFETY MESSAGE TO MAINTENANCE PERSONNEL

Listed below are some important safety instructions and precautions you should follow:

- Read and understand all instructions before operating this system.
- Any maintenance to the light system must be done with the power turned off.
- Any maintenance to the light system must be performed by a trained electrician in accordance with all applicable national and local codes in the country of use.
- Never alter the unit in any manner. Safety of the unit may be compromised if additional openings or other alterations are made.
- The nameplate should not be obscured, it contains cautionary and/or other information of importance to maintenance personnel. Ensure the nameplate remains readable if the housing's exterior is painted.
- If dome is damaged in any way, it MUST be replaced.
- After performing any maintenance, test the light system to ensure that it is operating properly.

Failure to follow all safety precautions and instructions may result in property damage, serious injury, or death to you or others.

A. *Flash Tube Replacement.*

As strobe lights are used, the flash tubes begin to darken, causing the light output to decrease. This darkening is characteristic of flash tubes. The darkening will begin near the base of the tube and progress upward. In addition, as flash tubes age, they may have a tendency to misfire (not fire periodically).

After extended operation, occasionally check for flash tube degradation. Should the flash tube misfire, have a noticeable decrease in light output, glow continuously or darken to a point beyond that shown in Figure 1 — it should be replaced.

⚠WARNING

High voltages are present inside the light assembly. Wait at least 5 minutes after shutting off the power before servicing this unit.

To change the flash tube, proceed as follows:

1. Disconnect power.

2. Loosen the setscrew, located on the bottom of dome.

3. Grasp the top of the dome and push down while turning the dome counterclockwise approximately 3/4-inch (19 mm).

4. Gently lift dome away. Ensure that the gasket between the dome and base is not lost.

5. Loosen the retaining ring fastening screws approximately 1/2 turn. The retaining ring can then be turned counterclockwise approximately 1/2-inch (13mm) allowing the retaining ring to be lifted free of the unit. The interior lens can now be removed from the unit.

6. Grasp the flash tube by its base and pull it out of the socket, using a gentle “rocking” motion. Install new flash tube, ensuring that the flash tube is fully seated in the socket.

7. Reinstall interior lens.

8. Before replacing the dome, ensure that the gasket is properly seated and shows no signs of cracking or other deterioration. Replace the gasket if it is damaged or shows signs of deterioration.

9. Place the dome over the base, aligning the recesses inside the dome lip with the four pins on the base. Push down on the dome and turn clockwise until it locks in place [approximately 3/4-inch (19mm)].

10. Replace the screw into the bottom of the dome.

11. Test the light for proper operation.

B. *Circuit Board Replacement.*

⚠WARNING

High voltages are present inside the light assembly. Wait at least 5 minutes after shutting off the power before servicing unit.

1. Disconnect power.

2. Remove the setscrew located at the bottom of the dome.

3. Grasp the top of the dome and push down while turning the dome counterclockwise approximately 3/4-inch (19mm).

4. Gently lift dome away. Ensure that the gasket between the dome and base is not lost.

5. Loosen the retaining ring fastening screws approximately 1/2 turn. The retaining ring can then be turned counterclockwise approximately 1/2-inch (13mm), allowing the retaining ring to be lifted free of the unit. The interior lens can now be removed from the unit.

6. Remove and retain the screws and heat sink clip (DC model only) which secure the power supply circuit board to its mounting plate. Remove the power connector(s) from the P.C. board. Since some strobes are polarity sensitive, connect matching colored wires together.

7. Secure the new circuit board to the mounting plate with the previously removed screws. For DC circuit board, reattach heat sink clip.

8. Install flash tube as described in Section III. A (Flash Tube Replacement). Ensure that the flash tube is fully seated in the socket.

9. Reinstall interior lens.

10. Before replacing the dome, ensure that the gasket is properly seated and shows no signs of cracking or other deterioration. Replace the gasket if it is damaged or shows signs of deterioration.

11. Place the dome over the base, aligning the recesses inside the dome lip with the four pins on the base. Push down on the dome and turn clockwise until it locks in place [approximately 3/4-inch (19mm)].

12. Replace the screw into the bottom of the dome.

13. Test the light for proper operation.

C. *Cleaning Enclosure.*

NOTE

The circuit must be turned OFF and fixture globe MUST be allowed to cool to ambient room temperature before cleaning.

The fixture should be cleaned periodically to maintain maximum light output. Only mild, non-abrasive cleaning agents should be used. The dome should be regularly inspected for scratches and chips, and if damaged, must be replaced.

D. *Service.*

Federal Signal will service your equipment and provide technical assistance with any problems that cannot be handled locally by Federal Signal's Distributor or Manufacturer Representative.

Any unit returned to Federal Signal for service, inspection, or repair must be accompanied by a Return Material Authorization number with a brief explanation of the service being requested and/or the nature of the malfunction. This R.M.A. can be obtained from the local Federal Signal Distributor or Manufacturer's Representative.

Address all communications and shipments to:

Federal Signal Corporation
Electrical Products Division
Service Department
2645 Federal Signal Drive
University Park, IL 60466-3195

E. *Replacement Parts.*

Description	Part Number
Exterior Dome, Clear, 120VAC, 240VAC 12-24VDC, 225XST; 24VDC, 224XST; 24VDC, 225XST-I	K8444219C-04
Interior- Lens, Clear	K8550C095A
Interior- Lens, Red	K8550C095A-03
Interior- Lens, Blue	K8550C095A-01
Interior- Lens, Amber	K8550C095A-02
Interior- Lens, Green	K8550C095A-04
Interior- Lens, Magenta	K8550C095A-07
Flash Tube/Trigger Coil Assy.	K8107177A
Circuit Board Assy., 12-24 VDC & 24 VDC	K2001202C-01
Circuit Board Assy., 120 VAC	K2001905A
Circuit Board Assy., 230-240 VAC	K2001905A-01
In-Rush PCB Assy. (24VDC ONLY)	K2001918A
Gasket	K8444286B

1

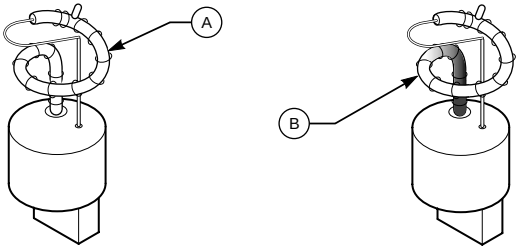

290A4166

English

A. New flash tube.

B. Used flash tube tends to discolor in areas shown, and should be replaced.

2561693E
REV. E Printed 5/06
Printed in U.S.A.

ITEM 7

MODEL 350WB

INSTALLATION INSTRUCTIONS FOR VIBRATONE HORN MODEL 350WB

MODELO 350WB

INSTRUCCIONES DE INSTALACION PARA LA BOCINA VIBRATONE MODELO 350WB

MODELE 350WB

INSTRUCTIONS D'INSTALLATION POUR LE KLAXON VIBRATONE, MODELE 350WB

Address all communications and shipments to:
Dirija todos la correspondencia y envíos a:
Adressez toutes les communiations et expéditions à:

FEDERAL SIGNAL CORPORATION

Gross Automation (877) 268-3700 · www.federalsignalsales.com · sales@grossautomation.com

INSTALLATION INSTRUCTIONS FOR VIBRATONE HORN MODEL 350WB

SAFETY MESSAGE TO INSTALLERS

NOTE

INSTALLATION, MAINTENANCE AND DISPOSAL OF THIS PRODUCT MUST BE CARRIED OUT IN ACCORDANCE WITH NATIONAL CODES AND STANDARDS.

It is important to follow all instructions shipped with this product. This device is to be installed by a trained electrician who is thoroughly familiar with and will follow all applicable national and local codes in the country of use.

The selection of the mounting location for the device, its controls and the routing of the wiring is to be accomplished under the direction of the Facilities Engineer and the Safety Engineer. In addition, listed below are some other important safety instructions and precautions you should follow:

- Read and understand all instructions before installing or operating this equipment.
- Do not connect this unit to the system when power is on.
- Optimum sound distribution will be severely reduced if any objects are in front of the speaker. You should ensure that the front of the speaker is clear of any obstructions.
- All effective warning horns produce loud sounds which may cause, in certain situations, permanent hearing loss. The device should be installed far enough away from potential listeners to limit their exposure while still maintaining its effectiveness. National Noise Standards, such as The OSHA Code of Federal Regulations 1910.95 in the United States, provide guidelines which may be used regarding permissible noise exposure levels.
- After installation, ensure that all mounting screws have been tightened.
- Establish a procedure to routinely check the sound system for proper activation and operation.
- Provide a copy of these instructions to the Safety Engineer, operator(s) and maintenance personnel.
- File these instructions in a safe place and refer to them when maintaining and/or reinstalling the device.

Failure to follow all safety precautions and instructions may result in property damage, serious injury, or death to you or others.

A. Introduction.

In all installations, it is recommended that the electrical wiring to the installation site be completed before the horn is mounted. Installations are subject to national and local electrical and fire codes and standards.

B. Installation.

WARNING

Do not connect wires when power is on.

The 350WB is gasketed and has two 3/4-14 NPT and one 1/2-14 NPT tapped openings to accommodate supply connections.

1. Use the rear enclosure of the 350WB as a template and mark the location of the mounting ears on the mounting surface. Secure the 350WB to the mounting surface with user-supplied fasteners suitable for the mounting surface.

Gross Automation (877) 268-3700 · www.federalsignalsales.com · sales@grossautomation.com

2. See figure 1. Remove and retain the four screws which secure the horn to the rear enclosure. Remove the horn from the rear enclosure.
3. Attach the supply wires to the terminal block as shown in figures 2 and 3. The terminal block is capable of accepting both solid and stranded wire within the range of 10 AWG (5.27 mm sq.) to 20 AWG (0.52 mm sq.). When using stranded wire, ensure that the strands of the wire are twisted together prior to inserting them into the terminal block.
4. Reassemble the horn to the rear enclosure using the previously removed screws.
5. For Model 350WB-120VAK only:

   a. Volume adjustment set screw is already installed in horn.

   b. For additional information, see instruction sheet 8435A536.

SAFETY MESSAGE TO MAINTENANCE PERSONNEL

- Read and understand all instructions before performing any maintenance to this unit.
- To reduce the risk of electrical shock or ignition of hazardous atmospheres, do not perform maintenance/service on this device when circuits are energized.
- Optimum sound distribution will be reduced if the speaker becomes clogged with a foreign substance. Periodic checks should be performed to ensure foreign substances are not packed into the speaker.
- Any maintenance to the warning system must be performed by a trained electrician in accordance with all applicable national and local codes and standards in the country of use.
- Never alter the unit in any manner. Safety in hazardous locations may be endangered if additional openings or alterations are made in units specifically designed for use in these locations.
- The nameplate, which may contain cautionary or other information of importance to maintenance personnel, should not be obscured if the exterior of housings are painted.

Failure to follow all safety precautions and instructions may result in property damage, serious injury, or death to you or others.

C. Audibility and Electrical Ratings..

VOLTAGE	CURRENT (AMPS)	Hz	dB*	dB**
120	0.18/0.22	50/60	100	94
230-240	0.09	50/60	100	94

* MEASURED ON-AXIS AT TEN FEET/3 METERS IN AN ANECHOIC CHAMBER.

Gross Automation (877) 268-3700 · www.federalsignalsales.com · sales@grossautomation.com

1

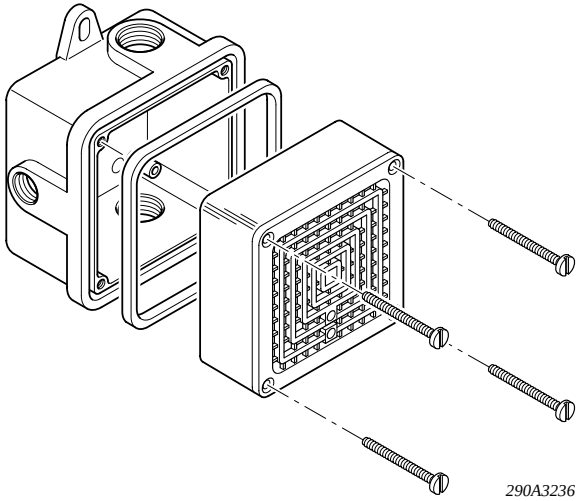

2

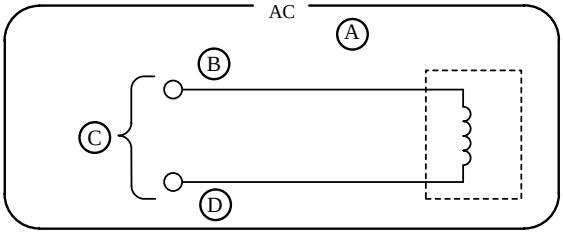

290A3235B

English

A. Standard AC horn wiring
B. L, phase
C. AC input power
D. N, neutral

Español

A. Cableado estandar CA la bocina
B. L, fase
C. Potencia de entrada CA
D. N, neutral

Français

A. Cablage standard du klaxon en courant alternatif
B. L, phase
C. Alimentation en courant alternatif
D. N, neutre

Gross Automation (877) 268-3700 · www.federalsignalsales.com · sales@grossautomation.com

3

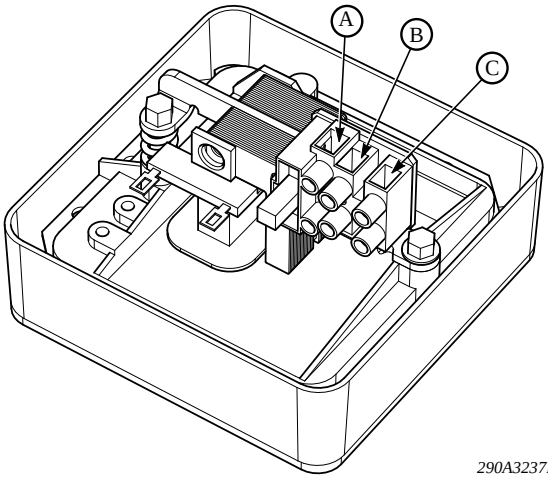

290A3237B

English	**Español**	**Français**
A. Phase, L	A. Fase, L	A. Phase, L
B. Ground	B. Tierra	B. Terre
C, Neutral, N	C. Neutral, N	C. Neutre, N

4

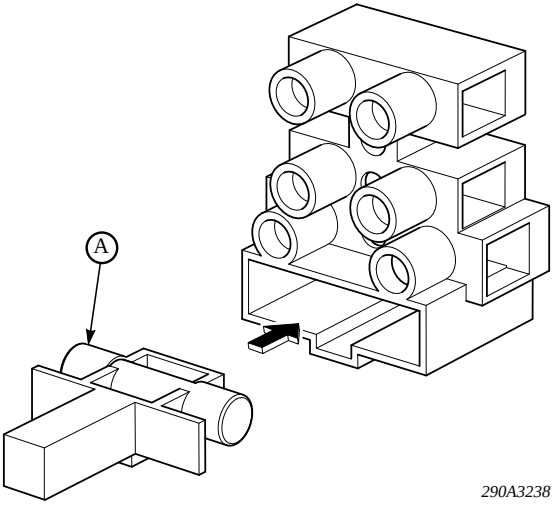

290A3238

English	**Español**	**Français**
A. 1 AMP 5 x 20mm fuse	A. Fusible 1 AMP 5 x 20mm	Fusible 5 x 20mm, 1A

Gross Automation (877) 268-3700 · www.federalsignalsales.com · sales@grossautomation.com

2561369F
REV. F Printed 1/05
Printed in U.S.A.

NOTE: AGENCY CONTROLLED DOCUMENT NO MODIFICATIONS PERMITTED WITHOUT THE APPROVAL OF FEDERAL SIGNAL AGENCY ENGINEERING

Gross Automation (877) 268-3700 · www.federalsignalsales.com · sales@grossautomation.com

ITEM 7

MODELS 350 and 450

350 AND 450 WEATHERPROOF PANEL MOUNTING

MODEL TR

MODELOS 350 y 450

MONTAJE DE PANELES A PRUEBA DE INTEMPERIE 350 Y 450

MODELO TR

MODELES 350 et 450

MONTAGE DE PANNEAU 350 ET 450 RESISTANT AUX INTEMPERIES

MODELE TR

Address all communications and shipments to:
Dirija todos la correspondencia y envíos a:
Adressez toutes les communiations et expéditions à:

FEDERAL SIGNAL CORPORATION

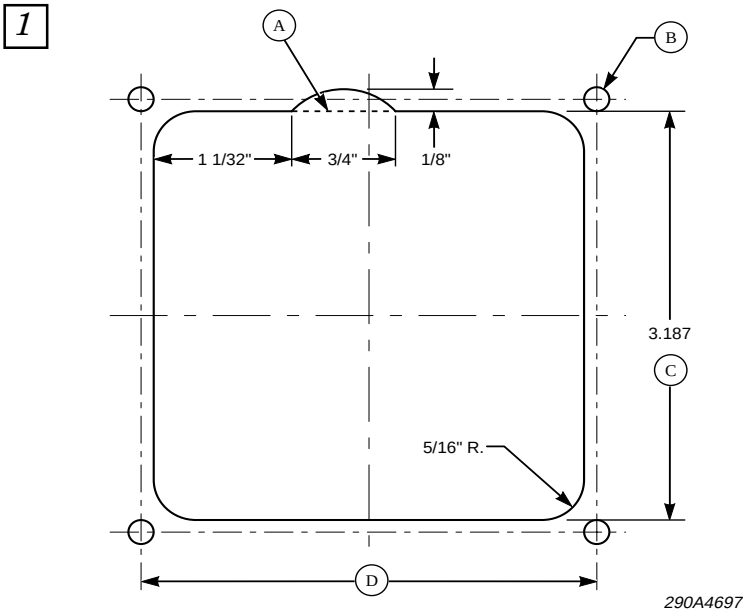

English
A. Model 350 only, additional clearance required for surface mounting.
B. 0.187 diam. holes (4)
C. Square opening
D. 3.375 square for hole centers

Español
A. Modelo 350 solamente: se requiere más espacio para el montaje en superficie
B. Agujeros (4) de 0,187 diám.
C. Abertura cuadrada de 3,187
D. Cuadrado de 3,375 para centros de agujeros

Français
A. Modele 350 uniquement: jeu supplementaire necessaire pour montage en surface
B. Trous de diam 0,187 (4)
C. Ouverture carree
D. Carre 3 3/5 pour les axes des trous

Gross Automation (877) 268-3700 · www.federalsignalsales.com · sales@grossautomation.com

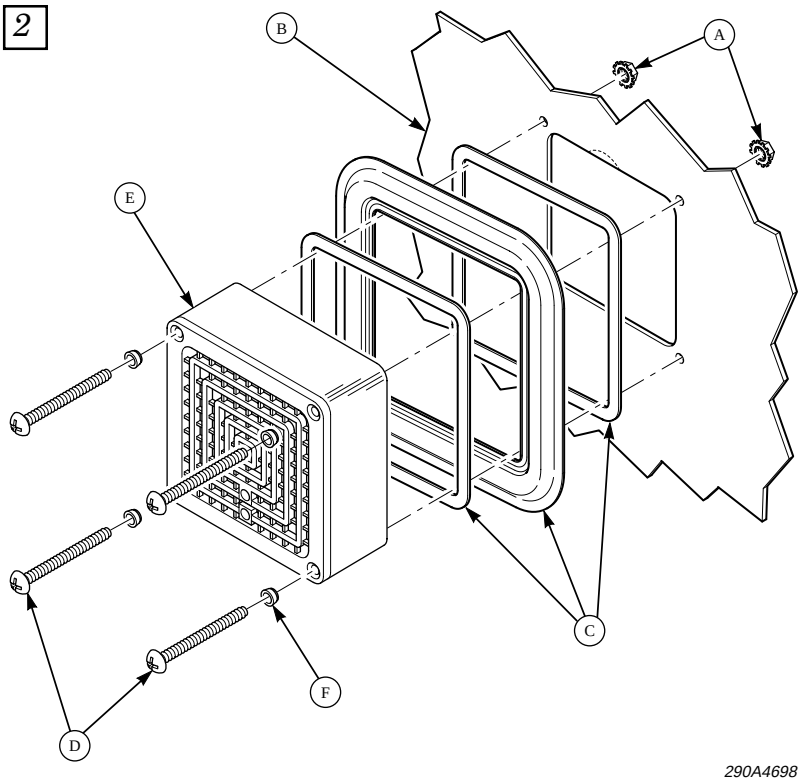

290A4698

English
A. 8-32 keps nut (4)
B. Mounting Surface
C. Trim Ring
D. #8-32 x 1 5/8" screw (4)
E. 350 Grille
F. Nylon Screw Collars

Español
A. Tuercas Keps 8-32 (4)
B. Superficie de montaje
C. Anillo de acabado
D. Tornillos #8-32 x 1 5/8" (4)
E. Rejilla 350
F. Abrazaderas de nailon

Français
A. Ecrou d'arrêt 8-32 (4)
B. Surface de montage
C. Anneau enjoliveur
D. Vis #8-32 x 1 5/8" (4)
E. Grille 350
F. Colliers filetés en nylon

2561906A
REV. A Printed 4/03
Printed in U.S.A.

Gross Automation (877) 268-3700 · www.federalsignalsales.com · sales@grossautomation.com

ITEM 7

FEDERAL SIGNAL CORPORATION
Electrical Products Division

8435A536E
Rev. E Printed 6/04
Printed in U.S.A.

EXTERNAL VOLUME ADJUSTMENT FOR THE MODEL 350 VIBRATORY HORN (NOT FOR USE WITH THE 450 VIBRATORY HORN)

Vibratory horns are shipped with the volume set for maximum sound output. However, the sound level can be reduced to any desired level with the 3/32" hex socket set screw provided. If the horn is a Model 350, install the screw at the location shown in the figure.

Before installing the set screw, thread hex washer head thread forming screw into the appropriate hole on the front of the horn. Remove the thread forming screw, and thread the set screw into the threaded hole. Use a 3/32 hex key wrench to rotate the set screw clockwise until the desired sound level is reached.

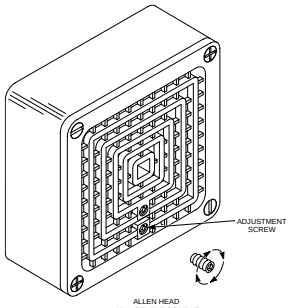

ALLEN HEAD
ADJUSTMENT SCREWS
(FOR SOFTER SOUND LEVEL, TURN CLOCKWISE) *290A1080B*

Product Data Sheet

RXM2AB3F7

ITEM 303

Plug-In Relay , Plug-In Socket (DIN rail or Flange with adapter), DPDT

List Price	$6.80 USD
Availability	**Stock Item: This item is normally stocked in our distribution facility.**

Technical Characteristics

Contact Arrangement	DPDT
Contact Rating (NEMA)	B300
Relay Type	Miniature
Description (Individual)	Ice Cube Relays / DPDT, 12 Amp Rating
Electrical Connection	Flat/Spade (Faston Type)
Mounting Style	Plug-In Socket (DIN rail or Flange with adapter)
Contact Configuration	2 NO/2 NC
Contact Materials	Silver Alloy (AgNi)
Coil Voltage	120 VAC
Coil Resistance	4430 Ohms
Average Consumption	1.2 VA
Drop-out Voltage Threshold	0.15 Uc
Rated Operational Current (IEC)	12A (NO) - 6A (NC)
Rated Operational Current (UL)	12A
Switching Capacity (Minimum)	10mA@17V
Horsepower Rating	0.5HP@120VAC
Switching Capacity (Maximum)	3000 VA
Conventional Thermal Current	12A
Maximum Switching Voltage	250V
Rated Insulation Voltage	300V (UL & CSA) - 250V (IEC)
Nominal Load (Resistive)	12A@250VAC - 12A@28VDC
Mechanical Durability	10 million operating cycles
Certifications	UL Listed - CSA Certified - CE Marked - RoHS Compliant
Operating Time (Response Time)	(NO) AC: 20ms DC: 20ms (NC) AC: 20ms DC: 20ms
Electrical Durability (Resistive Load)	0.1 million operating cycles
Type	RXM
Lockable Test Button	No
LED Indicator	Yes
Dielectric Strength - Between Coil and Contact	1550 VAC
Specifications	Sold in lots of 10
Ambient Air Temperature (Operation)	-40 to 131°F (-40 to 55°C)
Maximum Operating Rate (Under Load)	1200 operating cycles/hour

Generated: 07/09/2010 11:34:10

© 2010 Schneider Electric. All rights reserved.

Dielectric Strength - Between Poles	1550 VAC
Shock Resistance	15g (opening) 15g (closing)
Dielectric Strength - Between Contacts	1500 VAC
Degree of Protection	IP 40 conforming to IEC/EN 60529
Maximum Operating Rate (No Load)	18000 operating cycles/hour
Ambient Air Temperature (Storage)	-40 to 185°F (-40 to 85°C)
Weight	0.082 lbs (0.037kg)
Rated Impulse Withstand Voltage	3.6 kV

Shipping and Ordering

Category	21127 -
Discount Schedule	CP1
GTIN	00785901876656
Package Quantity	10
Weight	0.08 lbs.
Availability Code	Stock Item: This item is normally stocked in our distribution facility.
Returnability	Y
Country of Origin	CN

As standards, specifications, and designs change from time to time, please ask for confirmation of the information given in this document.

© 2010 Schneider Electric. All rights reserved.

RXZE2S108M

ITEM 304

RELAY SOCKET 300V 12A RUZ +OPTIONS

List Price	$5.90 USD
Availability	**Stock Item: This item is normally stocked in our distribution facility.**

Technical Characteristics

Shipping and Ordering

Category	21128 -
Discount Schedule	CP1
GTIN	00785901437871
Package Quantity	10
Weight	0.1 lbs.
Availability Code	Stock Item: This item is normally stocked in our distribution facility.
Returnability	Y
Country of Origin	CN

As standards, specifications, and designs change from time to time, please ask for confirmation of the information given in this document.

Generated: 07/09/2010 11:37:15

© 2010 Schneider Electric. All rights reserved.

PHOENIX CONTACT GmbH & Co. KG
D-32823 Blomberg, Germany
Fax +49-(0)5235-341200, Phone +49-(0)5235-300
www.phoenixcontact.com

ITEM 305

MNR 9014977-04 / 10.2012

(DE) Einbauanweisung für den Elektroinstallateur
(EN) Installation notes for electrical personnel
(FR) Instructions d'installation pour l'électricien
(ES) Instrucciónes de montaje para el instalador eléctrico

MINI-PS-100-240AC/24DC/4 Art.-Nr.: 2938837

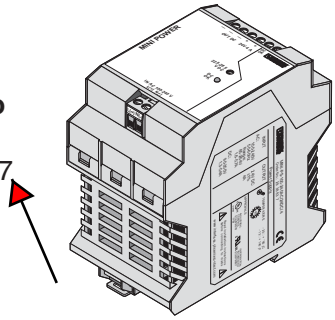

ENGLISH

Safety and warning notes

In order to guarantee safe operation of the device and to be able to make use of all the functions, please read these instructions thoroughly! Further technical information can be found in the associated data sheet under www.interface.phoenixcontact.com.

The device may only be **installed and put into operation** by qualified personnel.
The corresponding national regulations (e.g. VDE, DIN) must be observed.

Before putting the device into operation, ensure that

- the mains connection has been carried out by a competent person and protection against electric shock is guaranteed!
- the device can be disconnected outside the power supply unit in accordance with the regulations as in EN 60950 (e.g. through primary side line protection)!
- all feed lines are sufficiently protected and dimensioned!
- all output lines are dimensioned according to the maximum output current of the device or separately protected!
- sufficient convection is guaranteed!

MINI POWER power supplies are devices for installation as built-in equipment. After installation, the termination area must be covered to ensure sufficient protection against accidental contact with live parts. This requirement is met by installing the device in the control cabinet or in a distributor box.

ENGLISH

Technical Data

Order No.	
Input Data ①	
Nominal input voltage (wide-range input)	
Input voltage range	
Frequency	
Current consumption (at nominal values)	approx.
Inrush current limitation/ I^2t (+25 °C)	typ.
Mains buttering at nominal load (typ.)	
Turn-on time after applying the mains voltage	
Transient surge voltage protection	varistor
Input fuse, internal (device protection)	
Recommended backup fuse	power circuit breaker characteristic
Output Data ②	
Nominal output voltage U_N / tolerance	
Setting range of the output voltage	
Output current with convection cooling:	
• POWER BOOST I_{BOOST}	-25 to +40 °C
• Nominal output current I_N	-25 to +60 °C
Derating	from +60 °C
Current limitation at short-circuits	
Startup of unlimited capacitive loads	
Max. power dissipation	idling/nominal load approx.
Efficiency	(at 230V AC and nominal values)
Residual ripple/ peak switching (20 MHz)	(at nominal values)
Can be connected in parallel for redundancy and increased capacity	
Surge voltage protection against internal surge voltages	
Resistance to reverse feed	
Signal Output Data	
DC OK ③ active: (U_{out} > 21.5 V DC ≙ High signal)	
LED ⑤ (U_{out} > 21.5 V DC ≙ LED lit permanently)	
Approval Package	
Electrical equipment of machines	(surge voltage category III)
Electrical safety (of information technology equipment)	
Industrial regulating devices	
Electrical equipment for potentially explosive areas	
Electronic equipment for use in electric power inst.	
Protective low voltage	
Safe isolation	
Protection against shock currents, basic requirements for protective separation in electrical equipment	
Limitation of mains harmonic currents	according to
General Data	
Isolation voltage input / output	type test routine test
Degree of protection	
Class of protection	(in closed control cabinet)
MTBF	in acc. with IEC 61709 (SN 29500)
Type of housing	polyamide PA, colour green
Dimensions (W / H / D)	
Weight	approx.
Climatic Data	
Ambient temperature	operation storage
Humidity	at +25 °C, no condensation
Vibration	in acc. with IEC 60068-2-6
Shock (in all directions)	in acc. with IEC 60068-2-27
Contamination class	in acc. with EN 50178
Climatic class	in acc. with EN 60721

[1)] UL approval for ambient temperature up to +60 °C (+140 °F)

CE In conformance with EMC guideline 2004/108/EC and low voltage directive 2006/95/EC

A) This equipment is suitable for use in Class I, Division 2, Groups A, B, C, D or non-hazardous locations only.

B) WARNING - Explosion Hazard - Substitution of components may impair suitability for class I, Division 2.

C) WARNING - Explosion Hazard - Do not disconnect equipment unless power has been switched off or the area is known to be non-hazardous.

ENGLISH

Primary Switched-Mode Power Supply Unit
MINI-PS-100-240AC/24DC/4

Order No.: 2938837

1. View of the device, equipment connections and operating elements (Fig. 1):

① AC input: Input voltage 85-264 V AC, frequency 45-65 Hz

② DC output: Output voltage 24 V DC (preset), can be adjusted from 22.5 to 28.5 V DC via potentiometer ④

③ Active DC OK switching output

④ Potentiometer 22.5 - 28.5 V DC

⑤ DC OK control lamp, green

⑥ Universal snap-on foot for EN mounting rails

2. Installation (Fig. 2)

Caution: Never carry out work on live parts! Danger of fatal injury!

The power supply unit can be snapped onto 35 mm mounting rails in acc. with EN 60715. Installation should be made horizontally (input terminal blocks below).

In order to guarantee sufficient convection, a minimum distance to other modules of 5 cm above and below the device has to be observed.

3. Connection / Connecting Cable:

The device is equipped with COMBICON plug connectors.
This enables a fast connection of devices and a visible isolation of the electric connection if necessary.

Only plug in or unplug connectors in a power off state!
In order to comply with the UL certification, use copper cables that are designed for operating temperatures of 75°C.

Please use a screwdriver with a suitable blade width for wiring. You can connect the following cable cross sections:

Table 1:	Solid [mm²]	Stranded [mm²]	AWG	Torque [Nm]	Torque [lb in]	Stripping length L [mm]
① Input:	0.2-2.5	0.2-2.5	24-14	0.5-0.6	4.4-5.3	7
② Output:	0.2-2.5	0.2-2.5	24-14	0.5-0.6	4.4-5.3	7
③ Signal:	0.2-2.5	0.2-2.5	24-14	0.5-0.6	4.4-5.3	7

To achieve a reliable and shockproof connection, strip the connecting ends according to table 1 (Fig. 3)!

4. Input (①, Fig. 1, Fig.5)

The 100-240 V AC connection is made using the L and N screw connections.

The device can be connected to single-phase AC systems or to two of the phase conductors of three-phase systems (TN, TT or IT systems in acc. with VDE 0100 Part 300/IEC 364-3) with nominal voltages of 100-240 V AC.

For device protection, there is an **internal fuse.** Additional device protection is not necessary.
Recommended backup fuses are power circuit-breakers 6 A, 10 A or 10 A, characteristic B (or identical function).
In DC applications, a suitable backup fuse must be wired in!

For two-phase operation on two of the phase conductors of a three-phase systems, an isolating facility for all poles must be provided.

If the internal fuse is triggered, there is a device malfunction. In this case, the device must be inspected in the factory.

5. Output (②, Fig. 1)

NEC Class 2 power supply when installed with a 4.2 A maximum, UL listed fuse or circuit breaker in the output of the power supply. This procedure must be followed to meet NEC Class 2 requirements.

The 24 V DC connection is made using the "+" and "–" screw connections. At the time of delivery, the output voltage is 24 V DC. The output voltage can be set from 22.5 to 28.5 V DC on the potentiometer ④.
The active DC OK switching output (③, Fig. 6) is connected via screw connections "DC OK" and "–".

The device is electronically protected against short-circuit and idling. In the event of a malfunction, the output voltage is limited to 35 V DC.

5.1. Signaling (Fig. 6)

For function monitoring, there is the active DC OK switching output and the DC OK LED.

	Status 1	**Status 2**
Green LED "DC OK" ⑤	lights up	off
Active DC OK switching output ③	U = +24 V (in reference to "–")	U = 0 V (in reference to "–")
Meaning	Normal operation of the power supply. U_{OUT} > 21.5 V	$U_{OUT} \leq$ 21,5 V DC • Secondary consumer short-circuit or overload • No mains voltage or device faulty

5.2. Output characteristic curve (Fig. 7)

The device functions following the U-I characteristic curve. Under load, the operating point follows this curve. In the event of a short circuit or overload, the output current is limited to I_{BOOST}. The secondary voltage is reduced until the short circuit on the secondary side has been remedied.

5.3. Thermal behaviour (Fig.8)

In the case of ambient temperatures above +60°C, the output capacity has to be reduced by 2.5% per Kelvin increase in temperature.
From +70°C or a thermal overload, the device reduces the output power for its own protection, and returns to normal operation when it has cooled down.

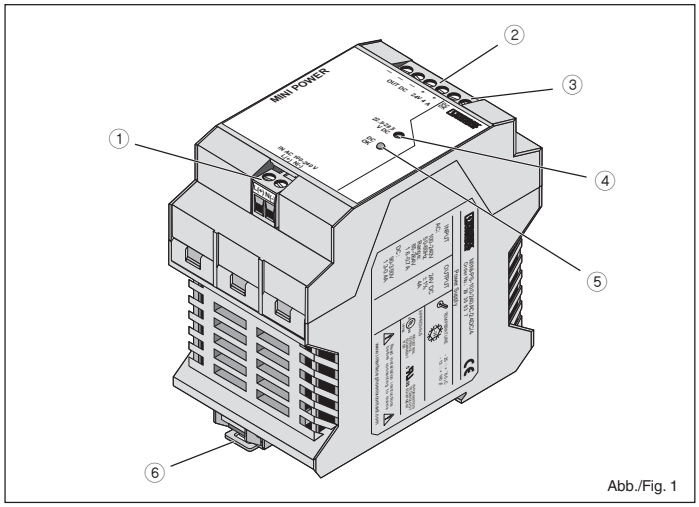

Abb./Fig. 1

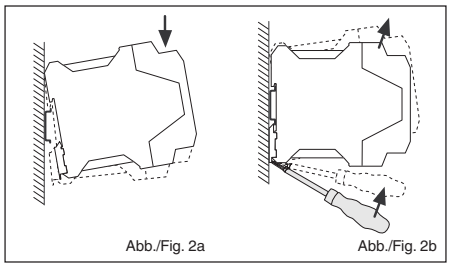
Abb./Fig. 2a Abb./Fig. 2b

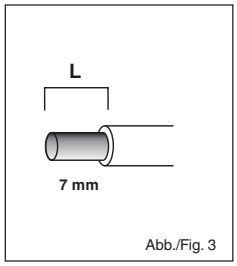

Abb./Fig. 3

Blockschaltbild / Block Diagram / Diagramme schématique / Esquema de conjunto

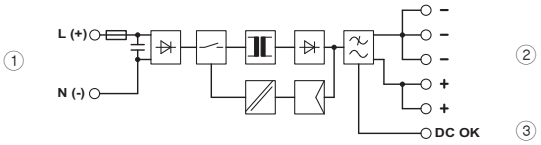

Abb./Fig. 4

Netzformen / Network Types / Types de réseaux / Formas de red (100-240 V AC)

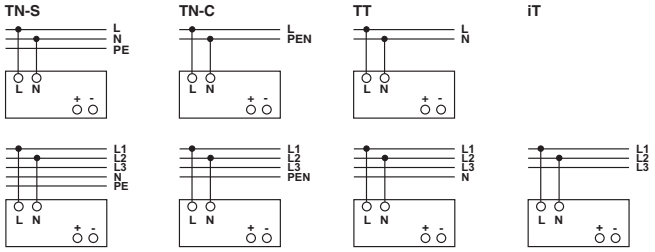

Abb./Fig. 5

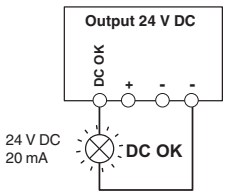

Abb./Fig. 6

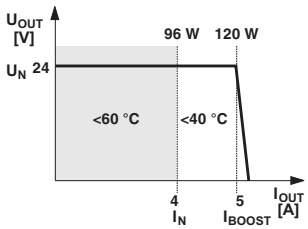

Abb./Fig. 7

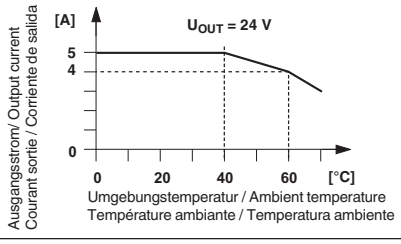

Abb./Fig. 8

Extract from the online catalog

UT 4

Order No.: 3044102

http://eshop.phoenixcontact.de/phoenix/treeViewClick.do?UID=3044102

Feed-through modular terminal block, Type of connection: Screw connection, Screw connection, Cross section: 0.14 mm² - 6 mm², AWG 26 - 10, Width: 6.2 mm, Color: gray, Mounting type: NS 35/7,5, NS 35/15

Commercial data	
GTIN (EAN)	4017918960391
sales group	A800
Pack	50 pcs.
Customs tariff	85369010
Weight/Piece	0.009516 KG
Catalog page information	Page 27 (CL-2009)

Product notes

WEEE/RoHS-compliant since: 01/01/2003

http://www.download.phoenixcontact.com Please note that the data given here has been taken from the online catalog. For comprehensive information and data, please refer to the user documentation. The General Terms and Conditions of Use apply to Internet downloads.

UT 4-PE

Order No.: 3044128

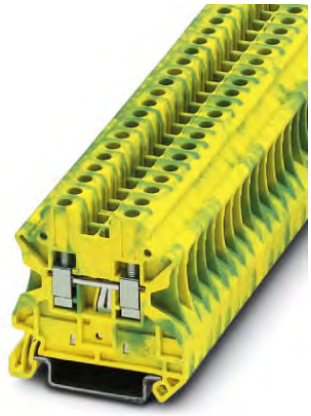

http://eshop.phoenixcontact.de/phoenix/treeViewClick.do?UID=3044128

Universal ground terminal block, Type of connection: Screw connection, Screw connection, Cross section: 0.14 mm² - 6 mm², AWG 26 - 10, Width: 6.2 mm, Color: green-yellow, Mounting type: NS 35/7,5, NS 35/15

Commercial data	
GTIN (EAN)	4017918960407
sales group	A803
Pack	50 pcs.
Customs tariff	85369010
Weight/Piece	0.013379 KG
Catalog page information	Page 33 (CL-2009)

Product notes

WEEE/RoHS-compliant since: 01/01/2003

http://www.download.phoenixcontact.com Please note that the data given here has been taken from the online catalog. For comprehensive information and data, please refer to the user documentation. The General Terms and Conditions of Use apply to Internet downloads.

Address

PHOENIX CONTACT Deutschland GmbH
Flachsmarktstr. 8
32825 Blomberg,Germany
Phone +49 5235 3 12000
Fax +49 5235 3 41200
http://www.phoenixcontact.de

© 2010 Phoenix Contact
Technical modifications reserved;

Extract from the online catalog

D-UT 2,5/10

Order No.: 3047028

http://eshop.phoenixcontact.de/phoenix/treeViewClick.do?UID=3047028

End cover, Length: 47.7 mm, Width: 2.2 mm, Height: 48.4 mm, Color: gray

Commercial data	
GTIN (EAN)	4017918960346
sales group	A892
Pack	50 pcs.
Customs tariff	85389099
Weight/Piece	0.002493 KG
Catalog page information	Page 26 (CL-2009)

Product notes

WEEE/RoHS-compliant since: 01/01/2003

http://www.download.phoenixcontact.com Please note that the data given here has been taken from the online catalog. For comprehensive information and data, please refer to the user documentation. The General Terms and Conditions of Use apply to Internet downloads.

Address

PHOENIX CONTACT Deutschland GmbH
Flachsmarktstr. 8
32825 Blomberg,Germany
Phone +49 5235 3 12000
Fax +49 5235 3 41200
http://www.phoenixcontact.de

© 2010 Phoenix Contact
Technical modifications reserved;

Extract from the online catalog

E/NS 35 N

Order No.: 0800886

http://eshop.phoenixcontact.de/phoenix/treeViewClick.do?UID=0800886

End bracket, width: 9.5 mm, color: gray

Commercial data	
GTIN (EAN)	4017918129309
sales group	B220
Pack	50 pcs.
Customs tariff	39269097
Weight/Piece	0.015 KG
Catalog page information	Page 318 (NTK-2010)

Product notes

WEEE/RoHS-compliant since: 02/01/2005

http://www.download.phoenixcontact.com Please note that the data given here has been taken from the online catalog. For comprehensive information and data, please refer to the user documentation. The General Terms and Conditions of Use apply to Internet downloads.

Address

PHOENIX CONTACT Deutschland GmbH
Flachsmarktstr. 8
32825 Blomberg,Germany
Phone +49 5235 3 12000
Fax +49 5235 3 41200
http://www.phoenixcontact.de

© 2010 Phoenix Contact
Technical modifications reserved;

Extract from the online catalog

FBS 20-6

Order No.: 3030365

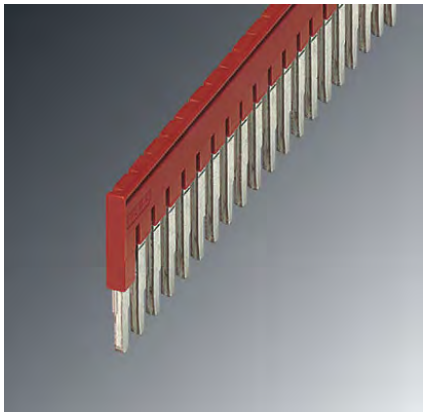

http://eshop.phoenixcontact.de/phoenix/treeViewClick.do?UID=3030365

Plug-in bridge, Number of positions: 20, Color: red

Commercial data	
GTIN (EAN)	4017918188597
sales group	A690
Pack	10 pcs.
Customs tariff	85389099
Weight/Piece	0.02015 KG
Catalog page information	Page 8 (NTK-2010)

Product notes

WEEE/RoHS-compliant since: 01/01/2003

http://www.download.phoenixcontact.com
Please note that the data given here has been taken from the online catalog. For comprehensive information and data, please refer to the user documentation. The General Terms and Conditions of Use apply to Internet downloads.

Address

PHOENIX CONTACT Deutschland GmbH
Flachsmarktstr. 8
32825 Blomberg,Germany
Phone +49 5235 3 12000
Fax +49 5235 3 41200
http://www.phoenixcontact.de

© 2010 Phoenix Contact
Technical modifications reserved;

217 Series, 5 x 20 mm, Fast-acting Fuse

Agency Approvals

Agency	Agency File Number	Ampere Range
	Cartridge Certificates: NBK120802-E10480 A&C Leaded Certificates: NBK120802-E10480 B&D	1A – 5A 6.3A – 15A 1A – 5A 6.3A – 15A
	Certificates: 2002010207007600 2002010207007599	32mA – 800mA 1A – 6.3A
	Certificates: SU05001-3004 SU05001-2005 SU05001-2006 SU05001-2007	32mA – 40mA 50mA – 315mA 400mA – 6.3A 8A & 10A
	E10480 JDYX2	32mA – 6.3A
	File: 029862 Acc. Class: LR1422-30	
	License: KM41462	400mA – 6.3A
	File: 948103, 915516, 304518 & 304555	32mA – 6.3A
	License: 40014645	32mA – 6.3A, 8A*, 10A*
	License: 40016647	15A*
		32mA – 15A

*Approval for cartridge versions only

Description

5x20mm fast-acting glass body cartridge fuse designed to IEC specification.

Features

- Designed to International (IEC) Standards for use globally
- Meets the IEC 60127-2, Sheet 2 specification for fast-acting fuses
- Available in cartridge and axial lead form
- RoHS compliant and lead-free

Applications

Used as supplementary protection in appliance or utilization equipment to provide individual protection for components or internal circuits.

Electrical Characteristics for Series

% of Ampere Rating	Ampere Rating	Opening Time
150%	32mA–100mA	60 minutes, Minimum
	125mA-6.3A	60 minutes, Minimum
	8A-15A	30 minutes, Minimum
210%	32mA-100mA	30 minutes, Maximum
	125mA-6.3A	30 minutes, Maximum
	8A-15A	30 minutes, Maximum
275%	32mA-100mA	0.01 sec., Min.; .5 sec. Max.
	125mA-6.3A	0.05 sec., Min.; 2 sec. Max.
	8A-15A	0.05 sec., Min.; 2 sec. Max.
400%	32mA-100mA	.003 sec., Min.; 0.1 sec.. Max.
	125mA-6.3A	.01 sec., Min.; 0.3 sec. Max.
	8A-15A	.01 sec., Min.; 0.4 sec. Max.
1000%	32mA-100mA	.02 second, Maximum
	125mA-6.3A	.02 second, Maximum
	8A-15A	.04 second, Maximum

© 2009 Littelfuse, Inc.
Specifications are subject to change without notice.
Please refer to www.littelfuse.com/series/217.html for current information.

Electrical Characteristic Specifications by Item

Amp Code	Amp Rating (A)	Voltage Rating (V)	Interrupting Rating	Nominal Cold Resistance (Ohms)	Nominal Melting I^2t (A^2 sec)	Nominal Voltage Drop at Rated Current (mV)	Nominal Power Dissipation At Rated Current (W)	Agency Approvals								
.032	0.032	250		262.2000	0.00006	10000	1.6	x	x		x	x	x	x	x	
.040	0.04	250		183.1500	0.00008	8000	1.6	x	x		x	x	x	x	x	
.050	0.05	250		15.2000	0.00019	7000	1.6	x	x		x	x	x	x	x	
.063	0.063	250		10.4500	0.00056	5000	1.6	x	x		x	x	x	x	x	
.080	0.08	250		7.8900	0.00083	4000	1.6	x	x		x	x	x	x	x	
.100	0.1	250		5.6965	0.00450	3500	1.6	x	x		x	x	x	x	x	
.125	0.125	250		3.8200	0.00478	2000	1.6	x	x		x	x	x	x	x	
.160	0.16	250		2.5250	0.01000	2000	1.6	x	x		x	x	x	x	x	
.200	0.2	250		1.7000	0.02000	1700	1.6	x	x		x	x	x	x	x	
.250	0.25	250		1.2325	0.04000	1400	1.6	x	x		x	x	x	x	x	
.315	0.315	250	35A@250Vac	0.8800	0.11000	1300	1.6	x	x		x	x	x	x	x	
.400	0.4	250		0.2770	0.12500	1200	1.6	x	x		x	x	x	x	x	x
.500	0.5	250		0.2065	0.21500	1000	1.6	x	x		x	x	x	x	x	x
.630	0.63	250		0.1900	0.41000	650	1.6	x	x		x	x	x	x	x	x
.800	0.8	250		0.1203	0.85000	240	1.6	x	x		x	x	x	x	x	x
001.	1	250		0.0964	1.04500	200	1.6	x	x	x	x	x	x	x	x	x
1.25	1.25	250		0.0701	2.23000	200	1.6	x	x	x	x	x	x	x	x	x
01.6	1.6	250		0.0528	4.61500	190	1.6	x	x	x	x	x	x	x	x	x
002.	2	250		0.0416	5.73000	170	1.6	x	x	x	x	x	x	x	x	x
02.5	2.5	250		0.0334	9.46000	170	1.6	x	x	x	x	x	x	x	x	x
3.15	3.15	250		0.0224	17.72000	150	2.5	x	x	x	x	x	x	x	x	x
004.	4	250	40A@250Vac	0.0165	29.16500	130	2.5	x	x	x	x	x	x	x	x	x
005.	5	250	50A@250Vac	0.0137	42.79500	130	2.5	x	x	x	x	x	x	x	x	x
06.3	6.3	250	63A@250Vac	0.0095	62.46500	130	2.5	x	x	x	x	x	x	x	x	x
008.	8	250	80A@250Vac	0.0068	198.16000	130	4	x		x				x	x*	
010.	10	250	100A@250Vac	0.0063	217.63500	130	4	x		x				x	x*	
015.	15	250	150A@250Vac	0.0040	607.13500	130	4			x				x	x*	

* Approval for cartidge versions only.

Temperature Rerating Curve

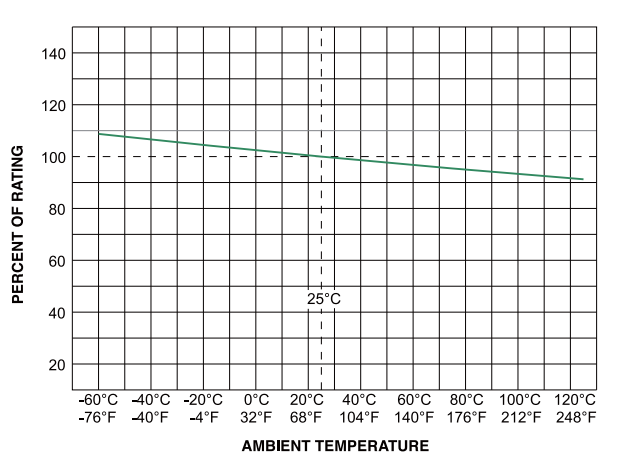

Average Time Current Curves

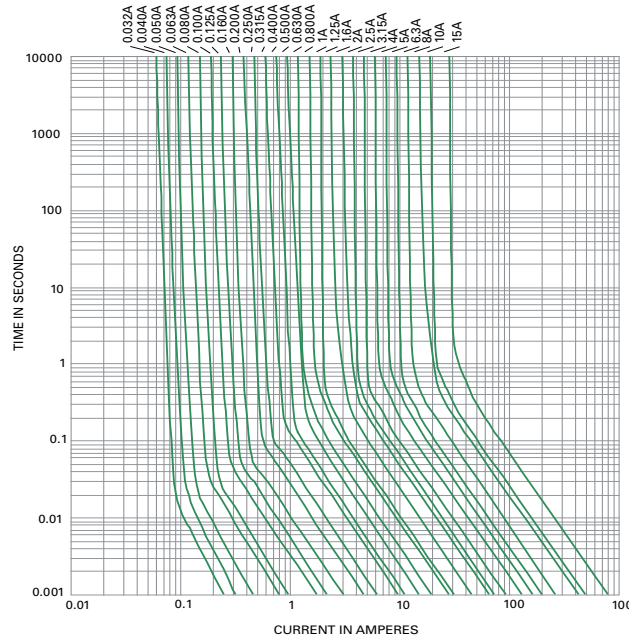

© 2009 Littelfuse, Inc.
Specifications are subject to change without notice.
Please refer to www.littelfuse.com/series/217.html for current information.

Soldering Parameters - Wave Soldering

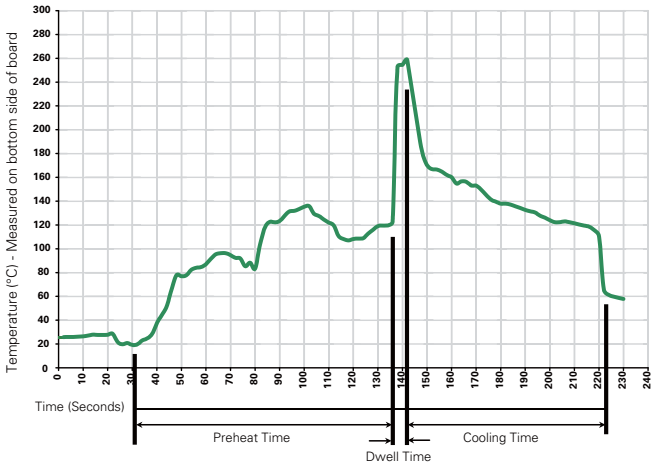

Recommended Process Parameters:

Wave Parameter	Lead-Free Recommendation
Preheat: (Depends on Flux Activation Temperature)	(Typical Industry Recommendation)
Temperature Minimum:	100° C
Temperature Maximum:	150° C
Preheat Time:	60-180 seconds
Solder Pot Temperature:	260° C Maximum
Solder Dwell Time:	2-5 seconds

Recommended Hand-Solder Parameters:

Solder Iron Temperature: 350° C +/- 5°C
Heating Time: 5 seconds max.

Note: These devices are not recommended for IR or Convection Reflow process.

Product Characteristics

Material	Body: Glass Cap: Nickel–plated brass Leads: Tin–plated Copper
Terminal Strength	MIL-STD-202G, Method 211A, Test Condition A
Solderability	Reference IEC 60127 Second Edition 2003-01 Annex A
Product Marking	Cap1: Brand logo, current and voltage ratings Cap2: Agency approval marks
Packaging	Available in Bulk (M=1000 pcs/pkg) or on Tape/Reel (MRET1=1000 pcs/reel)

Operating Temperature	–55°C to +125°C
Thermal Shock	MIL-STD-202G, Method 107G, Test Condition B: (5 cycles –65°C to +125°C)
Vibration	MIL-STD-202G, Method 201A
Humidity	MIL-STD-202G, Method 103B, Test Condition A. high RH (95%) and elevated temperature (40°C) for 240 hours.
Salt Spray	MIL-STD-202G, Method 101D, Test Condition B

© 2009 Littelfuse, Inc.
Specifications are subject to change without notice.
Please refer to www.littelfuse.com/series/217.html for current information.

Dimensions

0217 000P

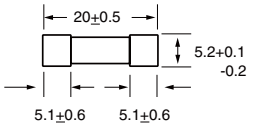

0217.032 **XEP**
to
0217.315 **XEP**

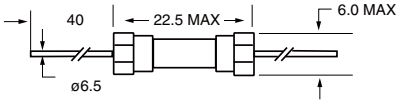

0217.400 **XEP**
to
0217015 **XEP**

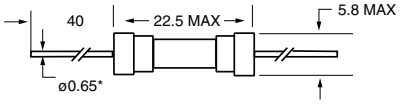

All dimensions in mm

Notes:
* Ratings above 6.3A have 0.8 mm dia lead

Part Numbering System

0217 xxxx M X E P

Series

Amp Code
Refer to Amp Code column of Electrical Characteristics Table

Quantity Code
M = 1000

Packaging Code
X = Filler

Option Codes
Blank = Cartridge Type Fuse
E = Axial Leaded Fuse

Lead-free

Packaging

Packaging Option	Packaging Specification	Quantity	Quantity & Packaging Code	Taping Width
Bulk	N/A	1000	MX	N/A
Bulk	N/A	1000	MXE	N/A
Reel and Tape	EIA 296-E	1000	MRET1	T1=52mm (2.062”)

© 2009 Littelfuse, Inc.
Specifications are subject to change without notice.
Please refer to www.littelfuse.com/series/217.html for current information.

1492 Terminal Blocks
1492 Bornes
1492 Reihenklemmen
1492 Morsetti
1492 Tablillas terminales
(Cat 1492-WFB4,1492-WFB424,1492-WFB4250)

USE COPPER WIRE ONLY
UTILISER SEULEMENT DU FIL DE CUIVRE
NUR KUPFERDRAHT VERWENDEN
SOLO USARE FILO DE RAME
SOLO USAR ALAMBRE DE COBRE

ATTENTION: To prevent electrical shock, disconnect from power source before installing or servicing.
ATTENTION:Avant le montage et la mise en service, couper l'alimentation secteur pour éviter toute décharges.
ACHTUNG: Vor Installations– oder Servicearbeiten Stromversorgung unterbrechen, um Electroshocks zu vermeiden.
ATTENZIONE: Per prevenire infortuni, togliere tensione prima dell'installazione o manutenzione.
ATENCION: Desconéctese de la corriente eléctrica, antes de la instalación o del servicio, a fin de impedir sacudidas

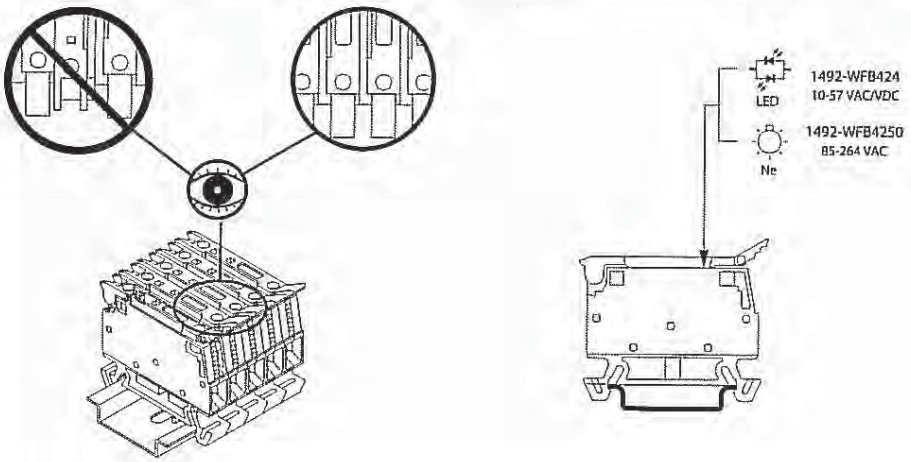

HANDLE REMOVAL
RETRAIT DE LA POIGNEE
ENTFERNEN DES GRIFFS
RIMOZIONE DELLA MANIGLIA
EXTRACCION DE MANIJA

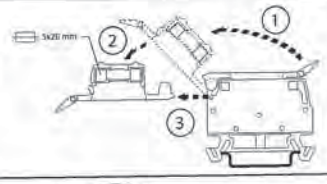

MULTI-POLE INSTALLATION
INSTALLATION MULTI-POLAIRE
MEHRPOLIGE INSTALLATION
INSTALLAZIONE MULTIPOLARE
INSTALACION MULTIPOLAR

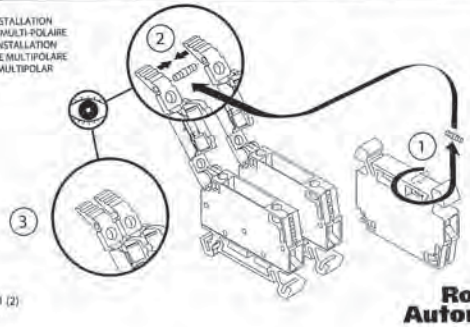

41063-171-01 (2)
4298870000

Rockwell Automation

ITEM 509

ProCurve Networking
HP Innovation

Installation and
Getting Started Guide

ProCurve Series 3400cl Switches

www.procurve.com

invent

ProCurve Series 3400cl Switch

Installation and Getting Started Guide

© Copyright 2004, 2006 Hewlett-Packard Development Company, L.P. The information contained herein is subject to change without notice.

This document contains proprietary information, which is protected by copyright. No part of this document may be photocopied, reproduced, or translated into another language without prior written consent of Hewlett-Packard.

Publication Number

5991-4702
March 2006

Applicable Products

ProCurve Switch 3400cl-24G (J4905A)
ProCurve Switch 3400cl-48G (J4906A)
ProCurve 600 Redundant and External Power Supply (J8168A)
ProCurve 10-GbE X2-SC SR Optic (J8436A)
ProCurve 10-GbE X2-SC LR Optic (J8437A)
ProCurve 10-GbE X2-SC ER Optic (J8438A)
ProCurve 10-GbE CX4 Media Converter (J8439A)
ProCurve 10-GbE X2-CX4 Transceiver (J8440A)
ProCurve 10-Gig Copper Module (J8434A)
ProCurve 10-Gig Media Flex Module (J8435A)

Trademark Credits

Windows NT®, Windows®, and MS Windows® are US registered trademarks of Microsoft Corporation. Adobe® and Acrobat® are trademarks of Adobe Systems Incorporated. Java™ is a US trademark of Sun Microsystems, Inc.

Disclaimer

HEWLETT-PACKARD COMPANY MAKES NO WARRANTY OF ANY KIND WITH REGARD TO THIS MATERIAL, INCLUDING, BUT NOT LIMITED TO, THE IMPLIED WARRANTIES OF MERCHANTABILITY AND FITNESS FOR A PARTICULAR PURPOSE. Hewlett-Packard shall not be liable for errors contained herein or for incidental or consequential damages in connection with the furnishing, performance, or use of this material.

The only warranties for HP products and services are set forth in the express warranty statements accompanying such products and services. Nothing herein should be construed as constituting an additional warranty. HP shall not be liable for technical or editorial errors or omissions contained herein.

Hewlett-Packard assumes no responsibility for the use or reliability of its software on equipment that is not furnished by Hewlett-Packard.

Warranty

See the Customer Support/Warranty booklet included with the product.

A copy of the specific warranty terms applicable to your Hewlett-Packard products and replacement parts can be obtained from your HP Sales and Service Office or authorized dealer.

Safety

Before installing and operating these products, please read the “Installation Precautions” in chapter 2, “Installing the Switch”, and the safety statements in appendix C, “Safety and EMC Regulatory Statements”.

Hewlett-Packard Company
8000 Foothills Boulevard, m/s 5552
Roseville, California 95747-5552
http://www.procurve.com

Contents

1 Introducing the Switch

Front of the Switch 1-3
- Network Ports 1-4
- LEDs 1-5
- LED Mode Select Button and Indicator LEDs 1-7
- Reset Button 1-8
- Clear Button 1-8
- Expansion Module LEDs 1-9

Back of the Switch 1-10
- Console Port 1-10
- Power Connector 1-10

Switch Features 1-11

2 Installing the Switch

Included Parts 2-1

Installation Procedures 2-3
- Summary 2-3
- Installation Precautions: 2-4
- 1. Prepare the Installation Site 2-5
- 2. (Optional) Install or Remove a cl Module 2-7
- 3. (Optional) Install or Remove a Transceiver 2-8
- 4. (Optional) Install or Remove mini-GBICs 2-9
- 5. Verify the Switch Passes Self Test 2-11
  - LED Behavior: 2-12
- 6. Mount the Switch 2-13
  - Rack or Cabinet Mounting 2-13
  - Rack Mounting the Switch 3400cl-48G 2-14
  - Rack Mounting the Switch 3400cl-24G 2-16
  - Horizontal Surface Mounting 2-19

7. Connect the Switch to a Power Source 2-19
8. Connect the Network Cables 2-20
Using the RJ-45 Connectors 2-20
Connecting Cables to mini-GBICs 2-20
9. (Optional) Connect a Redundant Power Supply to the Switch 2-21
10. (Optional) Connect a Console to the Switch 2-24
Terminal Configuration 2-24
Direct Console Access 2-25
Sample Network Topologies 2-26
As a Desktop Switch 2-26
As a Segment Switch 2-27
Connecting to a Backbone Switch 2-29
Stacking the Switch 2-30
The Switch in a Redundant Topology 2-31

3 Getting Started With Switch Configuration

Recommended Minimal Configuration 3-1
Using the Console Setup Screen 3-2
Where to Go From Here 3-4
To Recover from a Lost Manager Password: 3-4
Using the IP Address for Remote Switch Management 3-5
Starting a Telnet Session 3-5
Starting a Web Browser Session 3-5

4 Troubleshooting

Basic Troubleshooting Tips 4-1
Diagnosing with the LEDs 4-4
Proactive Networking 4-8
Hardware Diagnostic Tests 4-9
Testing the Switch by Resetting It 4-9
Checking the Switch LEDs 4-9
Checking Console Messages 4-9
Testing Twisted-Pair Cabling 4-10
Testing Switch-to-Device Network Communications 4-10
Testing End-to-End Network Communications 4-10

Restoring the Factory Default Configuration 4-11
Downloading New Switch Software 4-12
HP Customer Support Services 4-13
Before Calling Support 4-13

A Specifications

Physical A-1
Electrical A-1
Environmental A-1
Acoustic A-2
Connectors A-2
Safety A-2
Lasers A-2

B Switch Ports and Network Cables

Switch Ports B-1
Twisted-Pair Cables B-1
Note on 1000Base-T Cable Requirements B-1
Mode Conditioning Patch Cord for Gigabit-LX B-3
Installing the Patch Cord B-4
Recommended Patch Cords B-4
Twisted-Pair Cable/Connector Pin-Outs B-5
Auto-MDIX Feature: B-5
Using Fixed Configurations B-5
Other Wiring Rules: B-5
Straight-Through Twisted-Pair Cable for
10 Mbps or 100 Mbps Network Connections B-7
Cable Diagram B-7
Pin Assignments B-7
Crossover Twisted-Pair Cable for
10 Mbps or 100 Mbps Network Connection B-8
Cable Diagram B-8
Pin Assignments B-8
Straight-Through Twisted-Pair Cable for
1000 Mbps Network Connections B-9
Cable Diagram B-9
Pin Assignments B-9

C Safety and EMC Regulatory Statements

Safety Information C-1
Informations concernant la sécurité C-2
Hinweise zur Sicherheit C-3
Considerazioni sulla sicurezza C-4
Consideraciones sobre seguridad C-5
Safety Information (Japan) C-6
Safety Information (China) C-7
EMC Regulatory Statements C-8
U.S.A. C-8
Canada C-8
Australia/New Zealand C-8
Japan C-8
Korea C-9
Taiwan C-9
European Community C-10

D Recycle Statements

Waste Electrical and Electronic Equipment (WEEE) Statements D-1

Index

Introducing the Switch

The ProCurve Switches 3400cl are multiport switches that can be used to build high-performance switched workgroup networks. These switches are store-and-forward devices offering low latency for high-speed networking.

ProCurve Switch 3400cl-24G (J4905A)

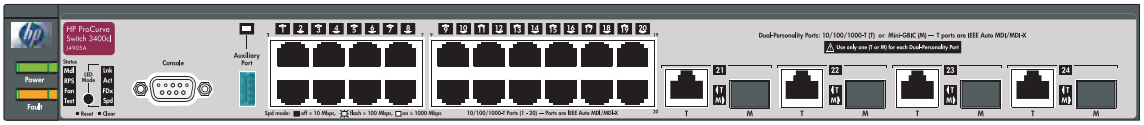

ProCurve Switch 3400cl-48G (J4906A)

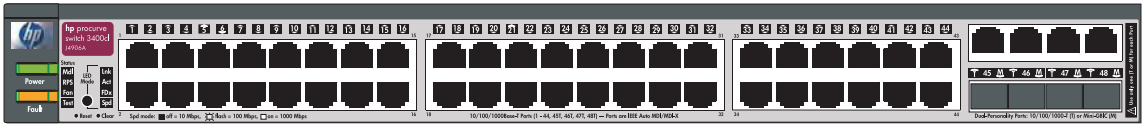

Throughout this manual, this switch will be abbreviated as the Switch 3400cl-24G or Switch 3400cl-48G and collectively as the Series 3400cl Switch devices.

The Switch 3400cl-24G and Switch 3400cl-48G have respectively, 24 or 48, auto-sensing 10/100/1000Base-T RJ-45 ports, four dual-personality ports—either auto-sensing 10/100/1000Base-T RJ-45 or mini-GBIC, and one slot is provided in the back of the device to support a two port 10 Gigabit per second Ethernet (10-GbE) module to provide box connectivity to other switch boxes, to a 10 Gigabit per second concentrator or to any Ethernet compatible uplink.

The Series 3400cl Switch devices can be connected to a ProCurve RPS/EPS (J8168A) and receive full redundant power from that unit. If the internal power supply in the switch fails, the RPS/EPS unit will immediately provide all the power necessary to keep the switch running.

These switches are designed to be used primarily as a high-density wiring closet or desktop switch. These switches can directly connect computers, printers, and servers to provide dedicated bandwidth to those devices, and can build a switched network infrastructure by connecting the switch to hubs, other switches, or routers. In addition, the Series 3400cl Switch devices offer full network management capabilities.

This chapter describes the Series 3400cl Switch devices, including:

- Front and back of the switches
- Switch features

Front of the Switch

ProCurve Switch 3400cl-24G

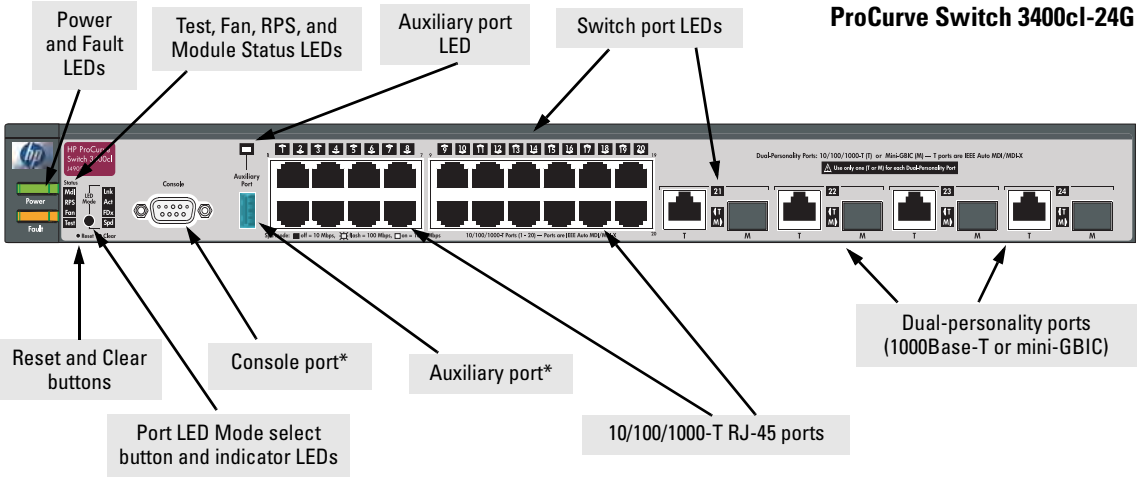

*On the 3400cl-48G switch, the console and Auxiliary ports are located on the back of the unit.

ProCurve Switch 3400cl-48G

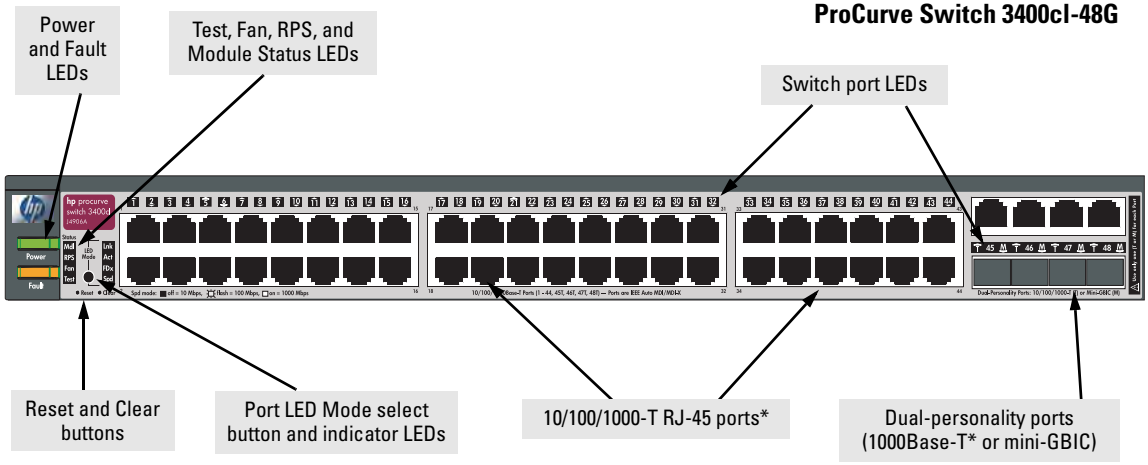

* 10/100/1000Base-T ports have the IEEE Auto MDI/MDI-X feature.

Network Ports

- 24 or 48 auto-sensing 10/100/1000Base-T ports.
  All these ports have the “HP Auto MDIX” feature, which means you can use either straight-through or crossover twisted-pair cables to connect any network devices to the switch.
- Four dual-personality ports. Use either the 10/100/1000Base-T RJ-45 connector, or install a supported ProCurve mini-GBIC for fiber-optic connections.
  The RJ-45 connectors support the IEEE Auto MDI/MDI-X feature, which means you can use either straight-through or crossover twisted-pair cables to connect any network device to the switch.

  Dual-Personality Port Operation. By default, the RJ-45 connectors are enabled. If a mini-GBIC is installed in a slot, it is enabled and the associated RJ-45 connector is disabled and cannot be used. If the mini-GBIC is removed, the associated RJ-45 port is automatically re-enabled.
- One, 10 gigabit expansion slot. These switches provide a single slot in the back of the device that can accept a 2 x 10 gigabit transceiver module. The module provides two 10 gigabit ports. The module may provide either copper or fiber optic media that conforms to the gigabit Ethernet standard as well as dual 10 gigabit copper or uplink ports.

LEDs

Table 1-1. Switch LEDs

Switch LEDs	State	Meaning
Power (green)	On Off	The switch is receiving power. The switch is NOT receiving power.
Fault (orange)	Off	The normal state; indicates there are no fault conditions on the switch.
	Blinking*	A fault has occurred on the switch, one of the switch ports, module in the rear of the switch, or the fan. The Status LED for the component with the fault will blink simultaneously.
	On	On briefly after the switch is powered on or reset, at the beginning of switch self test. If this LED is on for a prolonged time, the switch has encountered a fatal hardware failure, or has failed its self test. See chapter 4, "Troubleshooting" for more information.
Test (green)	Off	The normal operational state; the switch is not undergoing self test.
	On	The switch self test and initialization are in progress after the switch has been power cycled or reset. The switch is not operational until this LED goes off. The Self Test LED also comes on briefly when you "hot swap" a mini-GBIC into the switch; the mini-GBIC is self tested when it is hot swapped.
	Blinking*	A component of the switch has failed its self test. The status LED for that component, for example an RJ-45 port, and the switch Fault LED will blink simultaneously.
Port LEDs (green – over-laid with the port number)	Displays port link information, network activity information, whether the port is configured for full-duplex operation, or the speed of the connection depending on the Port LED View selected. See "Port LED View Select Button and Indicator LEDs" on the next page for more information. If a fault has occurred on the port, the port LED will blink with the Fault LED.	
LED Mode View (4 green LEDs)	Link	Indicates the port LEDs are displaying link information: • if the port LED is on, the port is enabled and receiving a link indication from the connected device. • if the port LED is off, the port has no active network cable connected, or is not receiving link beat or sufficient light. Otherwise, the port may have been disabled through the switch console, the web browser interface, or ProCurve Manager. • if the port LED is blinking* simultaneously with the Fault LED, the corresponding port has failed its self test.
	Act	Indicates the port LEDs are displaying network activity information.
	FDx	Indicates port LEDs are lit for ports in Full Duplex Mode. Off indicates ½duplex.
	Spd	Indicates the port LEDs are displaying the connection speed at which each port is operating: • if the port LED is off, the port is operating at 10 Mbps. • if the port LED is flashing**, the port is operating at 100 Mbps. • if the port LED is on continuously, the port is operating at 1000 Mbps. **** The flashing behavior is an on/off cycle once every 0.5 seconds, approximately.**

Switch LEDs	State	Meaning
Mdl (Module Status, green)	On Blinking Off	Expansion module is plugged into expansion slot and operating correctly Expansion module is plugged into expansion slot but has experienced a fault Expansion module is not plugged into expansion slot
RPS Status (green)	On Blinking Off	Normal operation. RPS is connected and operating correctly. RPS could be powering the unit - see table below. RPS is connected but has experienced a fault. RPS is not connected or is not powered.
Fan Status (green)	On Blinking*	Normal operation, all fans are ok. One of the unit's fans has failed. The switch Fault LED will be blinking simultaneously.
T/M (green – ports 21 - 24 or 45-48)	On	For the dual-personality ports, indicates the enabled port: • if the "T" is on, the 10/100/1000Base-T RJ-45 port is enabled. • if the "M" is on, the mini-GBIC port is enabled.
Auxiliary (green)	On Off	Port is in use Port is not in use
*** The blinking behavior is an on/off cycle once every 1.6 seconds, approximately.**		

Table 1-2. RPS LED Behavior

RPS modes	This table describes the behavior of the RPS LED associated with the 600 RPS/EPS operation. (Power, RPS/EPS, Fault)		
Power LED	**RPS LED**	**Fault LED**	**Description**
On	Off	Off	Normal operation. The 600 RPS/EPS is not connected or not powered.
On	On	Off	Normal operation. The 600 RPS/EPS is available.
On	On/Off	Blinking	Unit has experienced a fault and another LED will be blinking to determine fault.
On	On	Blinking	The 600 RPS/EPS is running the switch in failover mode. No AC power to the unit, or the internal power supply has failed.
Off	Off	Off	Unit is un-powered by AC input line and the external 600 RPS/EPS
On	Blinking	Blinking	The 600 RPS/EPS unit has experienced a fault.
On	Blinking	Off	The 600 RPS/EPS unit is unavailable to power the Switch in event of an internal power supply failure. The 600 RPS/EPS is designed to provide power to one of its connected switch devices at a time. The Power Status LED on the 600 RPS/EPS unit will also be blinking for this device.

LED Mode Select Button and Indicator LEDs

To optimize the amount of information displayed for each of the switch ports without overwhelming you with LEDs, the Series 3400cl Switch devices use a single LED for each port. The operation of this LED is controlled by the LED Mode select button, and the current setting is indicated by the LED Mode indicator LEDs near the button. Press the button to step from one view mode to the next.

ProCurve Switch 3400cl-24G

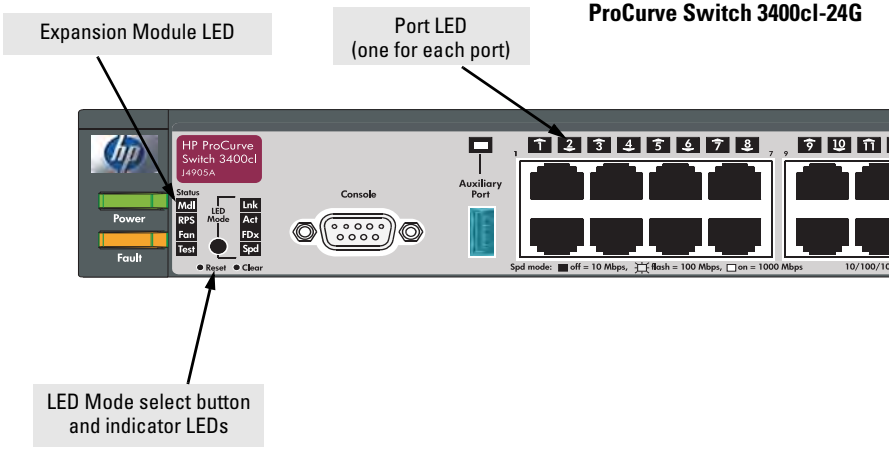

ProCurve Switch 3400cl-48G

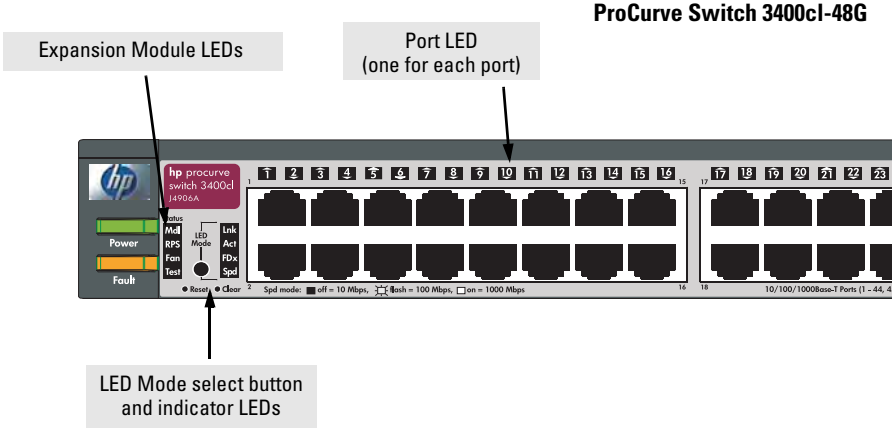

- If the Link (Lnk) indicator LED is lit, each port LED displays link information for the associated port.
  If the port LED is in Link mode and it is blinking, the port has failed its self test. The Fault and Self Test LEDs will be blinking simultaneously.
- If the Activity (Act) indicator LED is lit, each port LED displays activity information for the associated port—it flickers as network traffic is received and transmitted through the port.
- If the Full Duplex (FDx) indicator LED is lit, the port LEDs light for those ports that are operating in full duplex.
- If the Speed (Spd) indicator LED is lit, the port LEDs behave as follows to indicate the connection speed for the port:
  - Off = 10 Mbps
  - Flashing = 100 Mbps (the flashing behavior is a repeated on/off cycle once every 0.5 sec.)
  - On = 1000 Mbps

Reset Button

This button is used to reset the switch while it is powered on. This action clears any temporary error conditions that may have occurred and executes the switch self test.

Clear Button

This button is used for these purposes:

- **Deleting Passwords** - When pressed by itself for at least one second, the button deletes any switch console access passwords that you may have configured. Use this feature if you have misplaced the password and need console access.

  This button is provided for your convenience, but its presence means that if you are concerned with the security of the switch configuration and operation, you should make sure the switch is installed in a secure location, such as a locked wiring closet.
- **Restoring Factory Default Configuration** - When pressed with the Reset button in a specific pattern, any configuration changes you may have made through the switch console, the web browser interface, and SNMP management are removed, and the factory default configuration is restored to the switch. For the specific method to restore the factory default configuration, see "Restoring the Factory Default Configuration" on page 11, in chapter 4, "Troubleshooting" of this manual.

Expansion Module LEDs

"Expansion Module" LEDs refer to the LEDs specific to the expansion module. These LEDs are located on the physical expansion module bulkhead. These LEDs are only viewable in the rear of the Switch 3400cl-48G product on the Expansion Slot Module itself.

Table 1-3. Expansion Module LEDs

Name	Color	Mode	Description
Expansion Module LEDs per module			
Module (Mdl) Power (ports A & B)	Green	On	Expansion module is plugged into expansion slot and operating correctly
		Off	Expansion module's power has been turned OFF, and the card can be removed from the box if necessary.
Module (Mdl) Fault (ports A & B)	Orange	On	Expansion module is plugged into expansion slot but has experienced a fault
Expansion Module LEDs per port			
Link	Green	On	Indicates that the port LEDs are displaying link information: • if the port LED is on, the port is enabled and receiving a link indication from the connected device.
		Off	• if the port LED is off, the port has no active network cable connected, or is not receiving link beat or sufficient light. Otherwise, the port may have been disabled through the switch console, the web browser interface, or ProCurve Manager.
		Blinking	• if the port LED is blinking* simultaneously with the Fault LED, the corresponding port has failed its self test.
Act	Green	On	Indicates the port LEDs are displaying network activity information.
*** The blinking behavior is an on/off cycle once every 1.6 seconds, approximately.**			

Expansion module LEDs for port A and B operate in modes for Link and Activity. FDx and Spd modes have no meaning for the 10-GbE ports on the expansion module.

Caution

It is recommended the power to the switch be removed before inserting or extracting the Expansion Module.

Back of the Switch

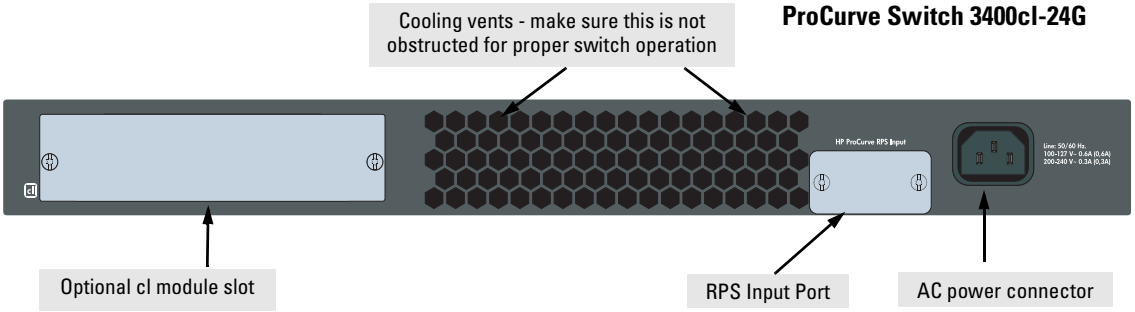

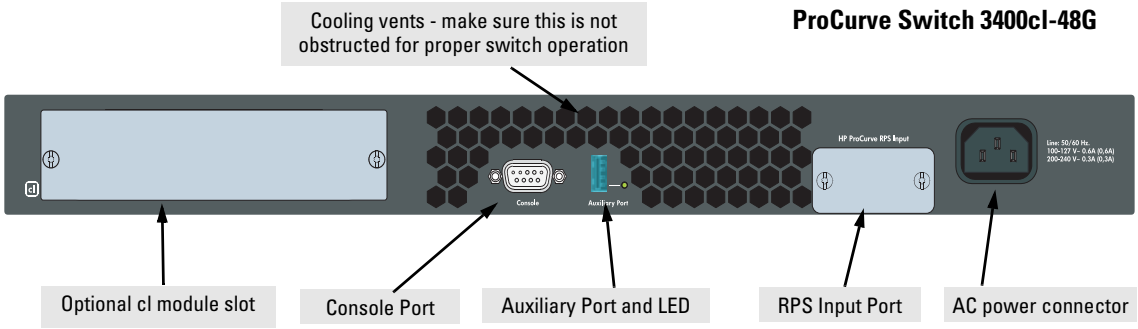

Console Port

This port is used to connect a console to the switch by using the serial cable supplied with the switch. This connection is described under “Connect a Console to the Switch” in chapter 2, “Installing the Switch.” The console can be a PC or workstation running a VT-100 terminal emulator, or a VT-100 terminal. The console port is located on the front of the 3400cl-24G and on the back of the 3400cl-48G.

Power Connector

The Series 3400cl Switch devices do not have a power switch; they are powered on when connected to an active AC power source. These switches automatically adjust to any voltage between 100--127 and 200--240 volts and either 50 or 60 Hz. There are no voltage range settings required.

Switch Features

The features of the Series 3400cl Switch devices include:

- 24 or 48 auto-sensing 10/1001000Base-T RJ-45 ports with HP Auto-MDIX.
- four dual-personality ports—either the auto sensing 10/100/1000Base-T RJ-45 or the mini-GBIC can be used for each port.
- one slot (optional cl module slot) is provided in the back of the device to support a series of transceivers to provide box connectivity to other switch boxes, to a 10 Gig concentrator or to any Ethernet compatible uplink.
- one auxiliary port is provided.
- The Series 3400cl Switch devices can be connected to a ProCurve RPS/EPS (J8168A) and receive full redundant power from that unit. If the internal power supply in the switch fails, the RPS/EPS unit will immediately provide all the power necessary to keep the switch running.
- plug-and-play networking—all ports are enabled—just connect the network cables to active network devices and your switched network is operational.
- IEEE 802.3ab Auto MDI/MDI-X on all 10/100/1000-T twisted-pair ports, meaning that **all connections can be made using straight-through twisted-pair cables**. Cross-over cables are not required, although they will also work. The pin operation of each port is automatically adjusted for the attached device: if the switch detects that another switch or hub is connected to the port, it configures the port as MDI; if the switch detects that an end-node device is connected to the port, it configures the port as MDI-X.
- automatic learning of the network addresses in each switch's 8000-address forwarding table, (with configurable address aging value).
- automatically negotiated full-duplex operation for the 10/100/1000-T RJ-45 ports when connected to other auto-negotiating devices—the mini-GBIC ports always operate at full duplex.
- easy management of the switch through several available interfaces:
  - **console interface**—a full featured, easy to use, VT-100 terminal interface that is especially good for out-of-band switch management or for Telnet access to the switch.
  - **web browser interface**—an easy to use built-in graphical interface that can be accessed from common web browsers.
  - **ProCurve Manager**—an SNMP-based, graphical network management tool that you can use to manage your entire network. This product is included with your new switch.

- support for the Spanning Tree Protocol to eliminate network loops
- support for up to 30 IEEE 802.1Q-compliant VLANs so you can divide the attached end nodes into logical groupings that fit your business needs.
- support for many advanced features to enhance network performance—for a description, see the *Management and Configuration Guide*, which is on the Documentation CD-ROM that is included with your switch.
- download of new switch software for product enhancements or bug fixes.

Installing the Switch

The ProCurve Series 3400cl Switch devices come with an accessory kit that includes the brackets for mounting the switch in a standard 19-inch telco rack, in an equipment cabinet, and with rubber feet that can be attached so the switch can be securely located on a horizontal surface. The brackets are designed to allow mounting the switch in a variety of locations and orientations. This chapter shows how to install the switch.

Included Parts

The Series 3400cl Switch devices have the following components shipped with them:

- *ProCurve Series 3400cl Switch Installation and Getting Started Guide*, this manual
- *ProCurve Product Documentation CD ROM* (contains PDF file copies of the documentation for the Series 3400cl Switch devices, including the *Management and Configuration Guide*, and for most other ProCurve switches)
- *ProCurve Manager* - CD ROM and booklet
- *Read Me First*
- Customer Support/Warranty booklet
- Console cable
- Accessory kits

(5064-2085) for Switch 3400cl-24G	**(5069-5705) for Switch 3400cl-48G**
two mounting brackets	two mounting brackets*
four 8-mm M4 screws to attach the mounting brackets to the switch	eight 8-mm M4 screws to attach the mounting brackets to the switch
four 5/8-inch number 12-24 screws to attach the switch to a rack	four 5/8-inch number 12-24 screws to attach the switch to a rack
four rubber feet	four rubber feet

* These mounting brackets differ from the 5064-2085 mounting brackets by being longer to support the increased depth of the 3400cl-48G product (compared to the 3400cl-24G).

- Power cord, one of the following:

Australia/New Zealand	8120-6803
China	8120-8377
Continental Europe	8120-6802
Denmark	8120-6806
Japan	8120-6804
Switzerland	8120-6807
United Kingdom/Hong Kong/Singapore	8120-8709
United States/Canada/Mexico	8120-6805

Japan Power Cord Warning

製品には、同梱された電源コードをお使い下さい。
同梱された電源コードは、他の製品では使用出来ません。

Please use the power cord supplied with your product. This power cord is not to be used with other products.

Installation Procedures

Summary

1. **Prepare the installation site (page 2-5).** Ensure the physical environment is properly prepared, including having the correct network cabling ready to connect to the switch and having an appropriate location for the switch. See page 2-4 for some installation precautions.
2. **Install a cl module (optional—page 2-7).**
3. **Install a transceiver (optional—(page 2-8).** If you have installed a media flex cl module, you can now install one or two transceivers.
4. **Install mini-GBICs (optional—page 2-9).** The switch has four slots for installing mini-GBICs. Depending on where you will mount the switch, it may be easier to install the mini-GBICs first. Mini-GBICs can be installed or removed while the switch is powered on.
5. **Verify the switch passes self test (page 2-11).** Plug the switch into a power source and observe that the LEDs on the switch's front panel indicate correct switch operation. When self test is complete, unplug the switch.
6. **Mount the switch (page 2-13).** The Switch can be mounted in a 19-inch telco rack, in an equipment cabinet, or on a horizontal surface.
7. **Connect power to the switch (page 2-19).** Once the switch is mounted, plug it into the nearby main power source.
8. **Connect the network cables (page 2-20).** Using the appropriate network cables, connect the network devices to the switch ports.
9. **Connect a Redundant Power Supply (RPS), (optional—page 2-21).** You may wish to use the RPS option with your Switch. Connect the RPS using the cables supplied with the RPS, to the back of the switch.
10. **Connect a console to the switch (optional—page 2-24).** You may wish to modify the switch's configuration, for example, to configure an IP address so it can be managed using a web browser, from an SNMP network management station, or through a Telnet session. Configuration changes can be made easily by using the included console cable to connect a PC to the switch's console port.

At this point, the switch is fully installed. See the rest of this chapter if you need more detailed information on any of these installation steps.

Installation Precautions:

Follow these precautions when installing the Series 3400cl Switch devices.

WARNING

- **The rack or cabinet should be adequately secured to prevent it from becoming unstable and/or falling over.**

  Devices installed in a rack or cabinet should be mounted as low as possible, with the heaviest devices at the bottom and progressively lighter devices installed above.
- **For safe operation, do not install the switch with the back face of the switch (with the fan vents) facing either downward or upward.**
- **Left side vents cannot be placed downward. (That is, the left side of the unit while facing the front.)**

Cautions

- Ensure the power source circuits are properly grounded, then use the power cord supplied with the switch to connect it to the power source.
- If your installation requires a different power cord than the one supplied with the switch, be sure to use a power cord displaying the mark of the safety agency that defines the regulations for power cords in your country. The mark is your assurance that the power cord can be used safely with the switch.
- When installing the switch, the AC outlet should be near the switch and should be easily accessible in case the switch must be powered off.
- Ensure the switch does not overload the power circuits, wiring, and over-current protection. To determine the possibility of overloading the supply circuits, add together the ampere ratings of all devices installed on the same circuit as the switch and compare the total with the rating limit for the circuit. The maximum ampere ratings are usually printed on the devices near the AC power connectors.
- Do not install the switch in an environment where the operating ambient temperature might exceed 55°C (131°F)[1] .
- Ensure the air flow around the sides and back of the switch is not restricted.

[1] If you are installing either of the Series 3400cl Switch devices using one of the fiber transceivers, the operating ambient temperature should not exceed 40°C (104°F). See transceiver specifications in the *ProCurve Switch cl Modules Installation Guide*.

1. Prepare the Installation Site

- **Cabling Infrastructure** - Ensure the cabling infrastructure meets the necessary network specifications. See the following table for cable types and lengths, and see Appendix B "Switch Ports and Network Cables" for more information:

Table 2-1. Summary of Cable Types to Use With the Switch

Port Type	Cable Type	Length Limits
	Twisted-Pair Cables	
10/100/1000Base-T	**For either 10, 100 Mbps, or 1000 Mbps operation:** Category 5 or better, 100-ohm UTP or shielded twisted-pair (STP) balanced cable. For 1000 Mbps (gigabit) operation, Category 5e cabling or better is recommended.	100 meters **Note:** The Series 3400cl Switch devices are compatible with the IEEE 802.3ab standard including the "Auto MDI/MDI-X" feature, which allows use of either straight-through or crossover twisted-pair cables for connecting to any network devices including end nodes, such as computers, or to other switches, hubs, and routers. **Note:** For 1000 Mbps operation, all four wire pairs are used for data transmission.

Port Type	Cable Type	Length Limits
	Fiber Optic Cables	
Gigabit-SX (on Gigabit-SX-LC mini-GBIC)	Multimode fiber-optic cables designed for Gigabit Ethernet: 62.5/125 µm or 50/125 µm (core/cladding) diameter, 850 nm, low metal content, graded-index cables, fitted with LC connectors. The cables must comply with the ITU-T G.651 and ISO/IEC 793-2 Type A1b or A1a standards.	• 62.5 µm cable: – 160 MHz*km = 220 meters – 200 MHz*km = 275 meters • 50 µm cable: – 400 MHz*km = 500 meters – 500 MHz*km = 550 meters
Gigabit-LX (on Gigabit-LX-LC mini-GBIC)	Single-mode fiber-optic cables designed for Gigabit Ethernet: 9/125 µm (core/cladding) diameter, 1310 nm, low metal content cables, fitted with LC connectors. The cables must comply with the ITU-T G.652 and ISO/IEC 793-2 Type B1 standards. The multimode cables specified for the Gigabit-SX mini-GBIC may also be used, but a mode-conditioning patch cord may be needed — see "Mode Conditioning Patch Cord for Gigabit-LX" on page B-3 for more information.	• single-mode cable = 5 kilometers • multimode cable = 550 meters
Gigabit-LH (on Gigabit-LH-LC mini-GBIC)	Single-mode fiber-optic cables designed for Gigabit Ethernet and fitted with LC connectors.	• single-mode cable = 70 kilometers

- **Installation Location** - Before installing the switch, plan its location and orientation relative to other devices and equipment:
  - In the front of the switch, leave at least 7.6 cm (3 inches) of space for the twisted-pair and fiber-optic cabling.
  - In the back of the switch, leave at least 3.8 cm (1 1/2 inches) of space for the power cord.
  - On the sides of the switch, leave at least 7.6 cm (3 inches) for cooling, except if the switch is installed in an open EIA/TIA rack.

2. (Optional) Install or Remove a cl Module

Note

Hot swapping modules is not supported. If a module is installed or removed with the switch powered on, a reset will occur. Only insert or remove a module during scheduled downtime with the switch powered off.

1. Remove the cover plate

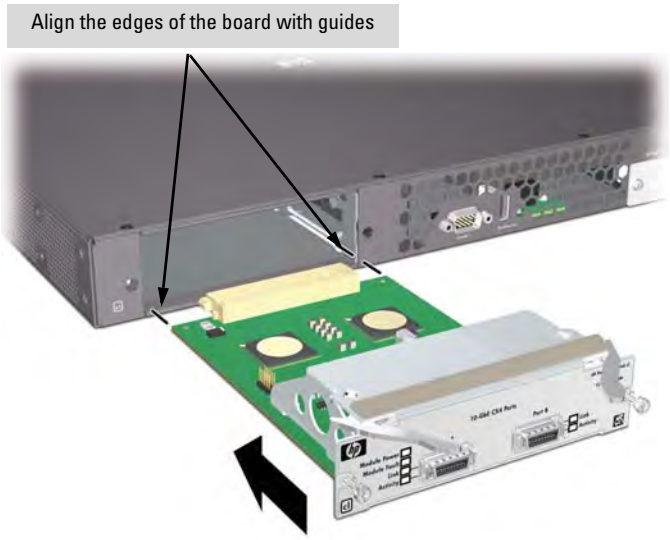

2. Insert the module aligning with the guides in the slot.
3. Once the contacts have engaged, use the extractor handles to seat the module completely.
4. Tighten the captive screws.

Refer to the *cl Module Installation Guide* for more details.

If you have installed a media flex module, you can now install a transceiver. See the following step.

3. (Optional) Install or Remove a Transceiver

Note

Hot swapping transceivers is supported. You can install or remove a transceiver with the switch powered on, a reset will not occur.

WARNING

The ProCurve X2 fiber optic transceivers are Class 1 or Class 1M laser devices. Avoid direct eye exposure to the beam coming from the transmit port.

a. Slide the transceiver in until it stops.

b. Push firmly until the gasket seats against the bulkhead.

Note

When switch power is on, the Link and Activity LEDs will come on for approximately two seconds and then go off. This is confirmation the transceiver is completely seated.

c. If your transceiver has a bail, move the bail up, if not your transceiver is now completely installed.

Refer to the *ProCurve Switch cl Modules Installation Guide* for more details.

To remove the transceiver:
If your transceiver has a bail, lower the bail until it is approximately horizontal, and then using the bail, pull the transceiver from the slot. If your transceiver does not have a bail, pull the transceiver straight out.

4. (Optional) Install or Remove mini-GBICs

You can install or remove a mini-GBIC from a mini-GBIC slot without having to power off the switch. Use only **ProCurve mini-GBICs**.

Notes

- The mini-GBIC slots are shared with the four 10/100/1000Base-T RJ-45 ports. If a mini-GBIC is installed in a slot, the associated RJ-45 port is disabled and cannot be used.
- The mini-GBIC ports operate only at full duplex. Half duplex operation is not supported.
- Ensure the network cable is NOT connected when you install or remove a mini-GBIC.

When this manual was printed, the supported mini-GBICs include the following:

- ProCurve Gigabit-SX-LC mini-GBIC (J4858B)
- ProCurve Gigabit-LX-LC mini-GBIC (J4859B)
- ProCurve Gigabit-LH-LC mini-GBIC (J4860B)

Caution

Use only supported genuine ProCurve mini-GBICs with your switch. Non-ProCurve mini-GBICs are not supported, and their use may result in product malfunction. Should you require additional ProCurve mini-GBICs, contact your ProCurve Networking Sales and Service Office or authorized dealer.

Installing the mini-GBICs:

Hold the mini-GBIC by its sides and gently insert it into either of the slots on the switch until the mini-GBIC clicks into place.

WARNING

The ProCurve mini-GBICs are Class 1 laser devices. Avoid direct eye exposure to the beam coming from the transmit port.

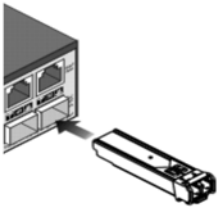

Removing the mini-GBICs:

Note

You should disconnect the network cable from the mini-GBIC before removing it from the switch.

Depending on when you purchased your ProCurve mini-GBIC, it may have either of three different release mechanisms: a plastic tab on the bottom of the mini-GBIC, a plastic collar around the mini-GBIC, or a wire bail.

To remove the mini-GBICs that have the plastic tab or plastic collar, push the tab or collar toward the switch until you see the mini-GBIC release from the switch (you can see it move outward slightly), and then pull it from the slot.

To remove the mini-GBICs that have the wire bail, lower the bail until it is approximately horizontal, and then using the bail, pull the mini-GBIC from the slot.

5. Verify the Switch Passes Self Test

Before mounting the switch in its network location, you should first verify it is working properly by plugging it into a power source and verifying it passes self test.

1. Connect the power cord supplied with the switch to the power connector on the back of the switch, and then into a properly grounded electrical outlet.

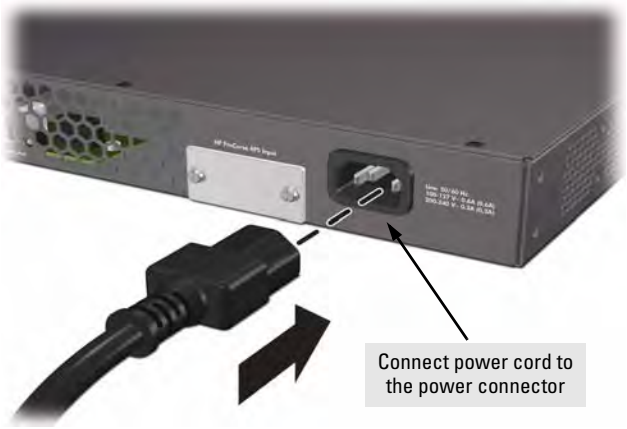

Note

The Series 3400cl Switch devices do not have a power switch. They are powered on when the power cord is connected to the switch and to a power source. For safety, the power outlet should be located near the switch installation.

The switch automatically adjusts to any voltage between 100-240 volts and either 50 or 60 Hz. No voltage range settings are required.

If your installation requires a different power cord than the one supplied with the switch, be sure to use a power cord displaying the mark of the safety agency that defines the regulations for power cords in your country. The mark is your assurance that the power cord can be used safely with the switch.

2. Check the LEDs on the switch as described below.

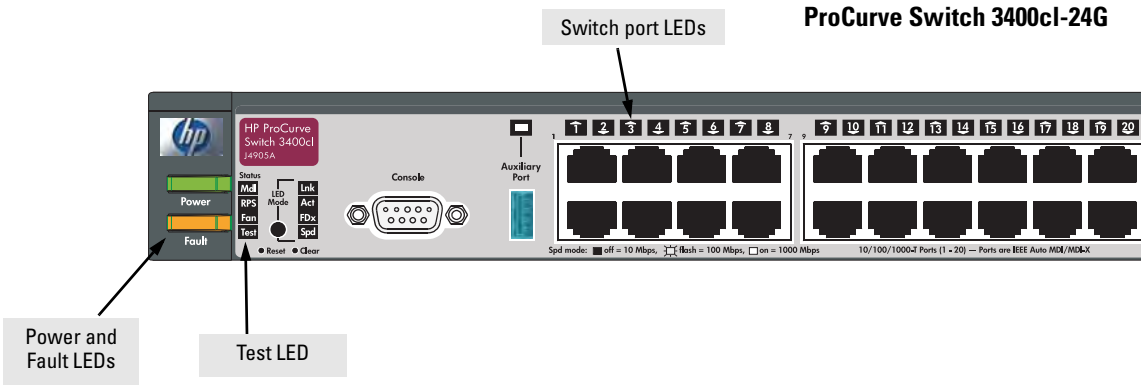

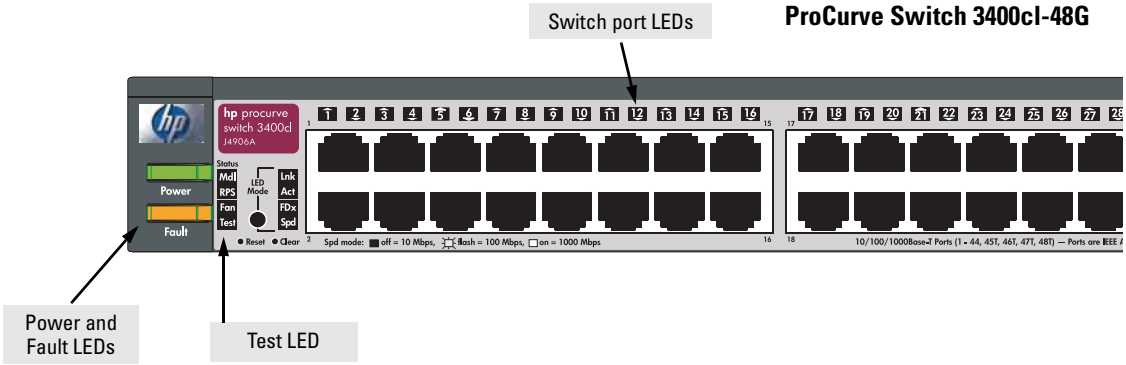

When the switch is powered on, it performs its diagnostic self test. Self test takes approximately 50 seconds to complete.

LED Behavior:

During the self test:

- Initially, all the status, LED Mode and port LEDs are on for most of the duration of the test.
- Most of the LEDs go off and then may come on again during phases of the self test. For the duration of the self test, the Test LED stays on.

When the self test completes successfully:

- The **Power** and **Fan Status** LEDs remain on.
- The **Fault** and **Test LED**s go off.
- The port LEDs on the front of the switch go into their normal operational mode:
  - If the ports are connected to active network devices, the LEDs behave according to the LED Mode selected. In the default view mode (Link), the LEDs should be on.
  - If the ports are not connected to active network devices, the LEDs will stay off.

If the LED display is different than what is described above, especially if the **Fault** and **Test LED**s stay on for more than 60 seconds or they start blinking, the self test has not completed correctly. Refer to chapter 4, "Troubleshooting" for diagnostic help.

6. Mount the Switch

After the switch passes self test, you are ready to mount the switch in a stable location. The Series 3400cl Switch devices can be mounted in these ways:

- in a rack or cabinet
- on a horizontal surface

Rack or Cabinet Mounting

The Series 3400cl Switch devices are designed to be mounted in any EIA-standard 19-inch telco rack or communication equipment cabinet.

WARNING

For safe operation, please read the mounting precautions on page 2-4, before mounting a switch.

Equipment Cabinet Note

The 12-24 screws supplied with the switch are the correct threading for standard EIA/TIA open 19-inch racks. If you are installing the switch in an equipment cabinet such as a server cabinet, use the clips and screws that came with the cabinet in place of the 12-24 screws that are supplied with the switch.

Complete step 1, and plan which four holes you will be using in the cabinet and install all four clips. Then proceed to step 2.

Rack Mounting the Switch 3400cl-48G

1. Use a #1 Phillips (cross-head) screwdriver and attach the mounting brackets to the switch with the included 8-mm M4 screws.

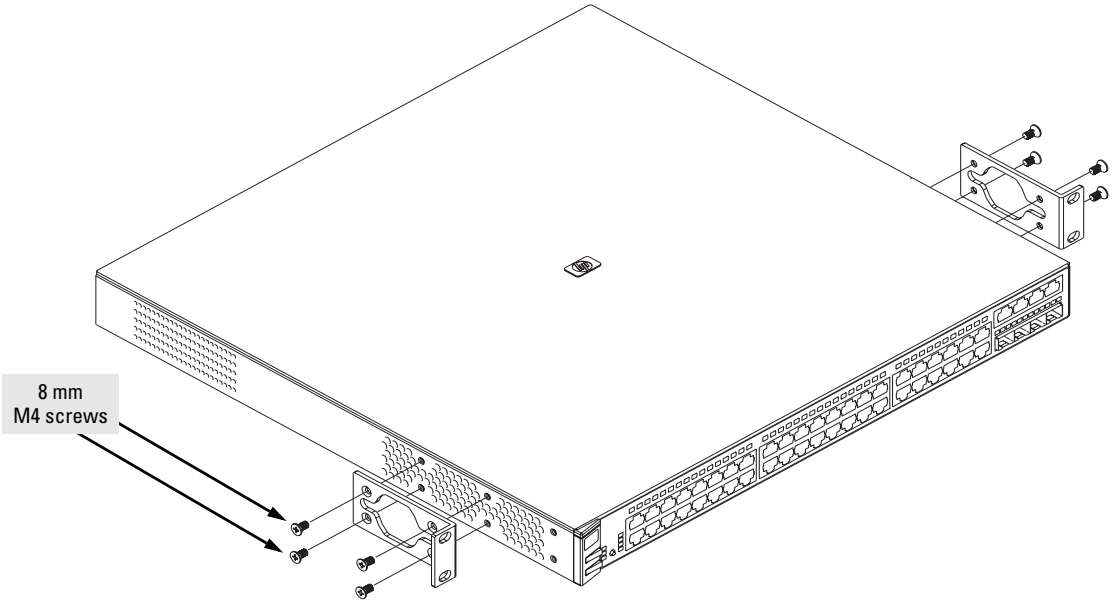

Note

The mounting brackets have multiple mounting holes and can be rotated allowing for a wide variety of mounting options. These include mounting the switch so its front face is flush with the face of the rack, or mounting it in a more balanced position as shown in the illustration.

2. Hold the switch with attached brackets up to the rack and move it vertically until rack holes line up with the bracket holes, then insert and tighten the four number 12-24 screws holding the brackets to the rack.

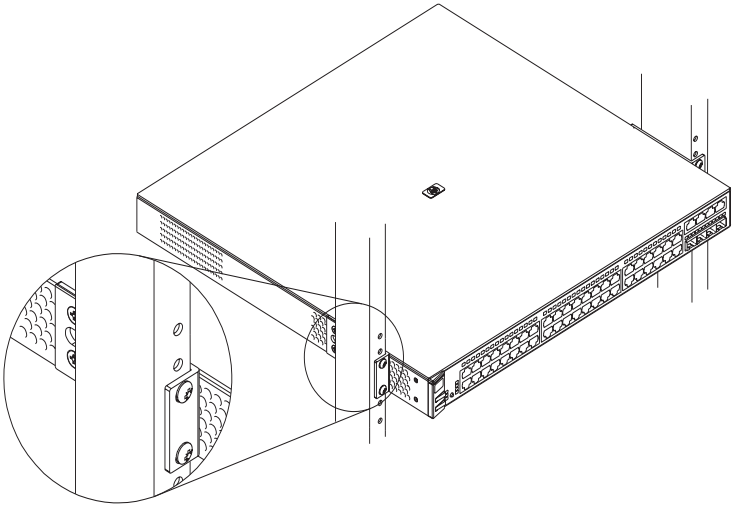

Rack Mounting the Switch 3400cl-24G

1. Use a #1 Phillips (cross-head) screwdriver and attach the mounting brackets to the switch with the included 8-mm M4 screws.

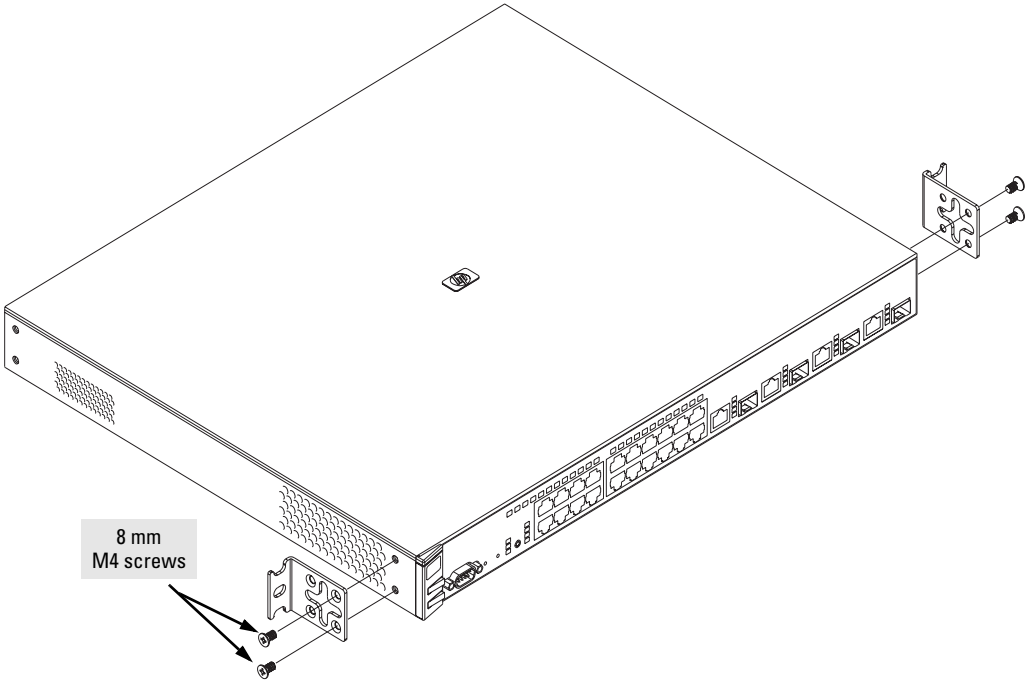

Note

The mounting brackets have multiple mounting holes and can be rotated allowing for a wide variety of mounting options. These include mounting the switch so its front face is flush with the face of the rack, or mounting it in a more balanced position as shown in the illustration.

Steps 2, 3, and 4 on the following pages describe a convenient method of mounting the switch in a rack by placing it on two screws that you first install in the rack. You may, instead, just hold the switch with attached brackets up to the rack and move it vertically until rack holes line up with the bracket holes and notches, then insert and tighten the four screws holding the brackets to the rack.

2. Partially install a screw (5/8-inch number 12-24) into the top hole of a pair of holes that are 0.5 inches apart in each rack/cabinet upright as shown in the illustration below. Ensure that the screws are at the same level in each upright.

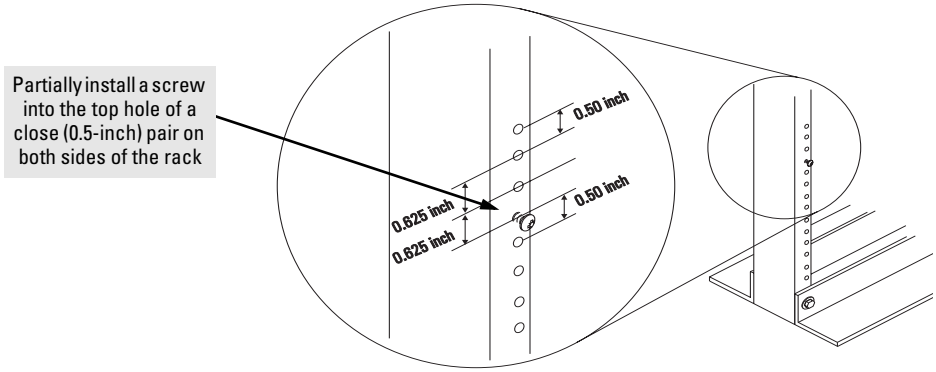

3. Place the switch in the rack and lower it so the notches in the bottom of the bracket slide onto the screws, then tighten these screws.

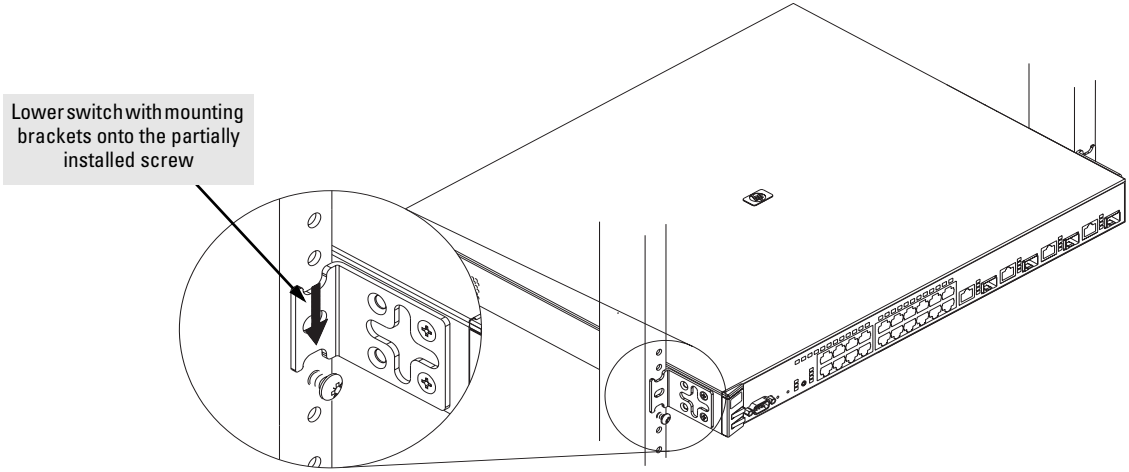

4. Install the other number 12-24 screw into the upper hole in each bracket. Tighten these screws.

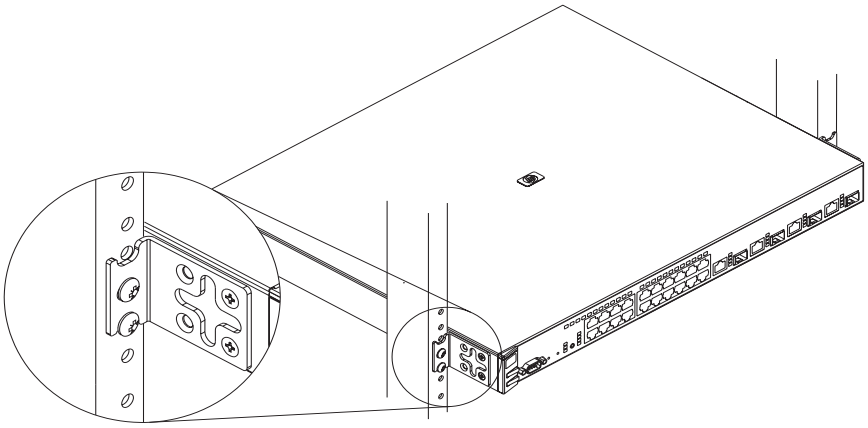

Horizontal Surface Mounting

Place the switch on a table or other horizontal surface. The switch comes with rubber feet in the accessory kit that can be used to help keep the switch from sliding on the surface.

Attach the rubber feet to the four corners on the bottom of the switch within the embossed angled lines. Use a sturdy surface in an uncluttered area. You may want to secure the networking cables and switch power cord to the table leg or other part of the surface structure to help prevent tripping over the cords.

Caution

Make sure the air flow is not restricted around the sides and back of the switch.

7. Connect the Switch to a Power Source

1. Plug the included power cord into the switch's power connector and into a nearby AC power source.
2. Re-check the LEDs during self test. See "LED Behavior" on page 2-12

8. Connect the Network Cables

Connect the network cables, described under "Cabling Infrastructure" (page 2-5), from the network devices or your patch panels to the fixed RJ-45 ports on the switch or to any mini-GBICs you have installed in the switch.

Using the RJ-45 Connectors

To connect:
Push the RJ-45 plug into the RJ-45 jack until the tab on the plug clicks into place. When power is on for the switch and for the connected device, the Link LED for the port should light to confirm a powered-on device (for example, an end node) is at the other end of the cable.

If the Link LED does *not* go on when the network cable is connected to the port, see *"Diagnosing with the LEDs" on page 4-4*, in chapter 4, "Trouble-shooting".

To disconnect:
Press the small tab on the plug and pull the plug out of the jack.

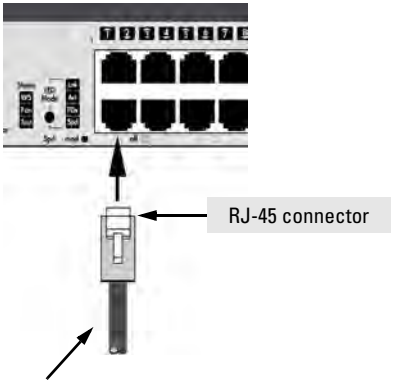

Unshielded twisted-pair cable:

- Category 3, 4, or 5 for 10 Mbps ports
- Category 5 or better for 100 Mbps ports
- Category 5E or better for 1000 Mbps ports

Maximum distance: 100 meters

Connecting Cables to mini-GBICs

Note

Each of the four mini-GBIC slots is shared with the associated 10/100/1000Base-T RJ-45 port. If a mini-GBIC is installed in a slot, the associated RJ-45 port is disabled.

If you have any mini-GBICs installed in the switch, the type of network connections you will need to use depends on the type of mini-GBICs you have installed. See the table on page 2-6, and appendix B, *"Switch Ports"*, for the mini-GBIC cabling information.

For mini-GBICs ports, and in general for all the switch ports, when a network cable from an active network device is connected to the port, the port LED for that port should go on. If the port LED does *not* go on when the network cable is connected to the port, see *"Diagnosing with the LEDs" on page 4-4* in chapter 4, "Troubleshooting".

9. (Optional) Connect a Redundant Power Supply to the Switch

The “ProCurve 600 Redundant and External Power Supply (hereafter referred to as the RPS/EPS)” (J8168A) is an accessory product for the Series 3400cl Switch devices and specific other ProCurve switches. The RPS/EPS provides redundant power to any one of up to six switch products, to back up the power supply in the switch in case of loss of AC power, or a fault condition. The RPS/EPS is an unmanaged power supply that only provides information by way of LEDs or through the port interfaces to attached devices.

Operating Characteristics

The RPS/EPS has six connectors, each of which can provide redundant +12V power to a connected switch, but only one connector can provide this power at a given time. If a switch with no AC power is connected to an operating RPS/EPS, it will NOT immediately power up this new switch. Power can only be provided to a switch if it is first powered on and operating correctly. Then when the power to the switch fails, power will be provided from the RPS/EPS, if it is available, that is, if the RPS/EPS is not already providing power to a higher priority switch. If two or more devices fail, priority goes to the device plugged into the lower numbered port on the RPS/EPS unit. Consequently the most important switch must be plugged into port one on the RPS/EPS. In this state, the “Connected” LED should be ON, and the “Power Status” LED should be BLINKING. (Refer to the documentation that came with your RPS/EPS.)

Connect the RPS/EPS to the switch using one of the 6 supplied RPS cables.

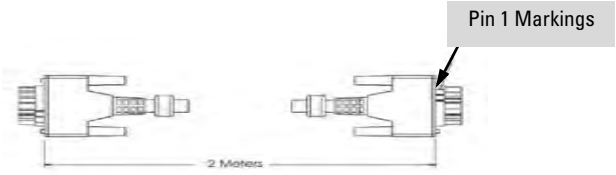

LEDs

The RPS LEDs are located on the back of the RPS/EPS. These LEDs are duplicated on the front of the device. The following graphic shows an example of the back of the RPS/EPS. There are two green LEDs for each RPS port:

- Device Connected
- Power Status

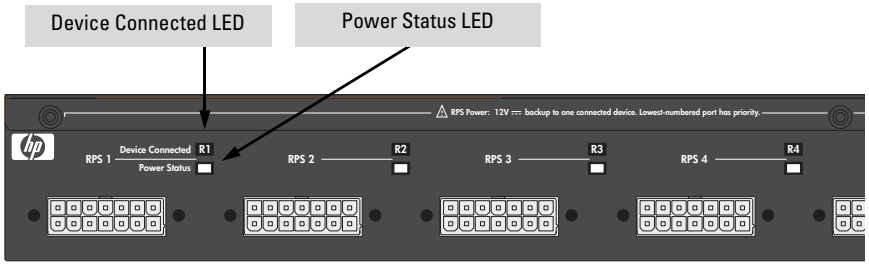

The following states provide status of an RPS/EPS port.

Fault	Device Connected	Power Status	Message
Off	Off	Off	Nothing Connected
On or Off	Off	On	Not a valid state - should never happen
Off	On	Off	Switch is connected, RPS is available but not required
Off	On	On	RPS is powering the connected device
Blinking	Off	Blinking	RPS port is in fault mode
Off	On	Blinking	Switch is requesting power, RPS can not provide it
Blinking	On	Off	Switch is unplugged, but RPS is powering switch

The following picture demonstrates and example of connectivity between an RPS/EPS device and a Switch device.

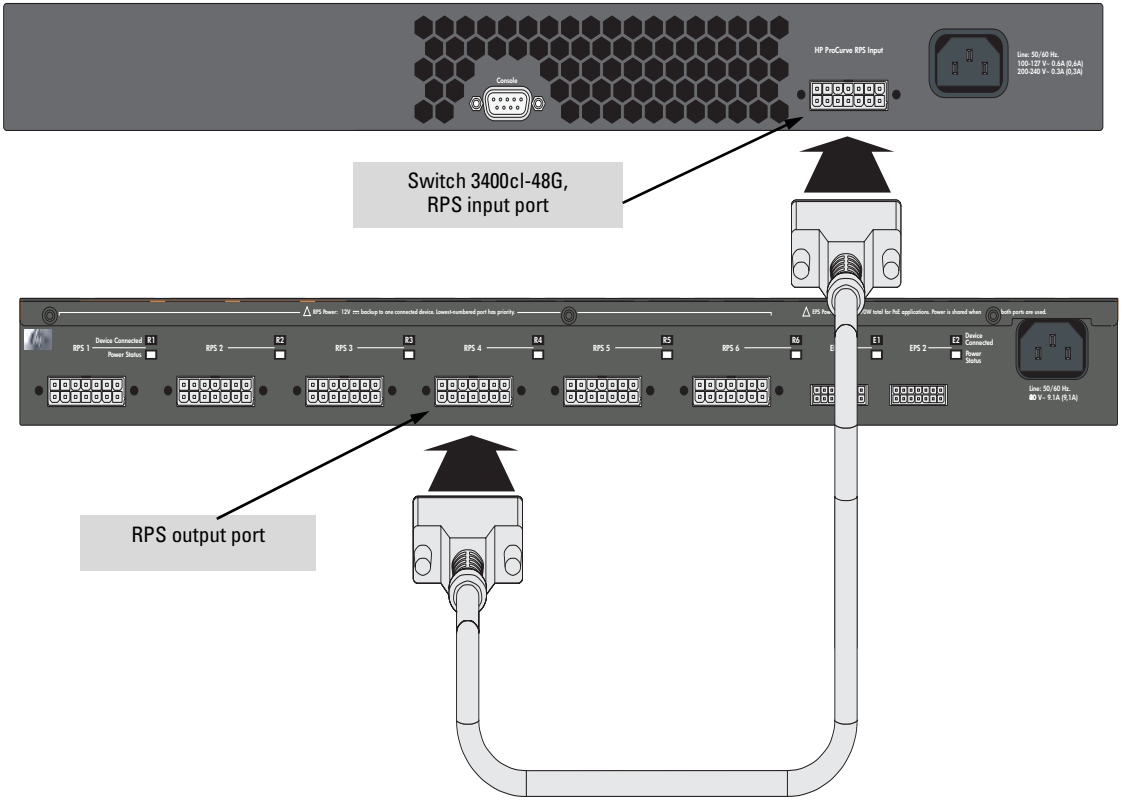

RPS/EPS Operation

The RPS/EPS monitors the power signal from the switch by detecting that the RPS/EPS is connected to a switch with an RPS/EPS cable. When the power from the switch is no longer detected, the RPS/EPS will turn on and provide power to the switch within 1ms.

The RPS/EPS supports hot plugging of the RPS/EPS cable without causing a reboot of the switch or causing the power supply in either the RPS/EPS or switch to shut down temporarily or permanently. For more information refer to the documentation that came with the RPS/EPS.

10. (Optional) Connect a Console to the Switch

The switch has a full-featured, easy to use console interface for performing switch management tasks including the following:

- Monitor switch and port status and observe network activity statistics
- Modify the switch's configuration to optimize switch performance, enhance network traffic control, and improve network security
- Read the event log and access diagnostic tools to help in troubleshooting
- Download new software to the switch
- Add passwords to control access to the switch from the console, web browser interface, and network management stations

The console can be accessed through these methods:

- **Out-of-band:** The switch comes with a serial cable for connecting a PC or VT-100 terminal, to be used as a console, directly to the switch.
- **In-Band:** Access the console using Telnet from a PC or UNIX station on the network, and a VT-100 terminal emulator. This method requires that you first configure the switch with an IP address and subnet mask by using either out-of-band console access or through DHCP/Bootp. For more information on IP addressing and on starting a Telnet session, see chapter 3, *"Getting Started With Switch Configuration"*, and the *Management and Configuration Guide*, which is on the Documentation CD-ROM that came with your switch.

The Switch can simultaneously support one out-of-band console session through the Console Port and one in-band Telnet console session.

Terminal Configuration

To connect a console to the switch, configure the PC terminal emulator as a DEC VT-100 (ANSI) terminal or use a VT-100 terminal, and configure either one to operate with these settings:

- any baud rate from 1200 to 115200 (the switch senses the speed)
- 8 data bits, 1 stop bit, no parity, and flow control set to Xon/Xoff
- For the Windows Terminal program, also disable (uncheck) the "Use Function, Arrow, and Ctrl Keys for Windows" option
- For the Hilgraeve HyperTerminal program, select the "Terminal keys" option for the "Function, arrow, and ctrl keys act as" parameter.

If you want to operate the console using a different configuration, make sure you change the settings on both the terminal and on the switch so they are compatible. Change the switch settings first, save your changes, then change the terminal settings, then reboot the switch and reestablish the console session.

Direct Console Access

To connect a console to the switch, follow these steps:

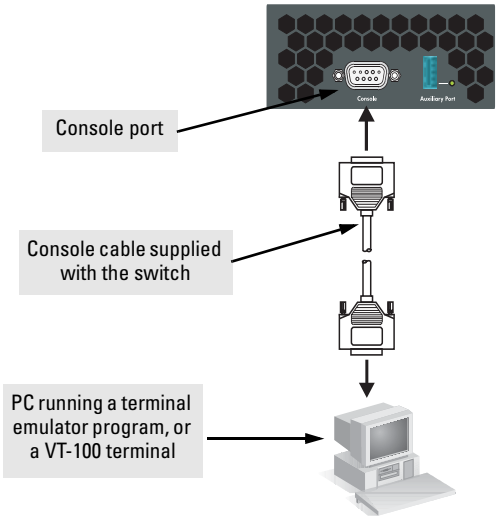

This picture demonstrates the Switch 3400cl-48G. Remember the console port on the Switch 3400cl-24G is in front.

1. Connect the PC or terminal to the switch's Console Port using the console cable included with the Switch. (If your PC or terminal has a 25-pin serial connector, first attach a 9-pin to 25-pin straight-through adapter at one end of the console cable.)
2. Turn on the terminal or PC's power and, if using a PC, start the PC terminal program.
3. Press **[Enter]** two or three times and you will see the copyright page and the message "Press any key to continue". Press a key, and you will then see the switch console command (CLI) prompt, for example:

   ProCurve Switch 3400cl-48G#

If you want to continue with console management of the switch at this time, see chapter 3, *"Getting Started With Switch Configuration"* for some basic configuration steps. For more detailed information, refer to the *Management and Configuration Guide*, which is on the Documentation CD-ROM that came with the switch.

Sample Network Topologies

This section shows a few sample network topologies in which the Switch is implemented. For more topology information, see the ProCurve network products Web site,*http://www.procurve.com*.

As a Desktop Switch

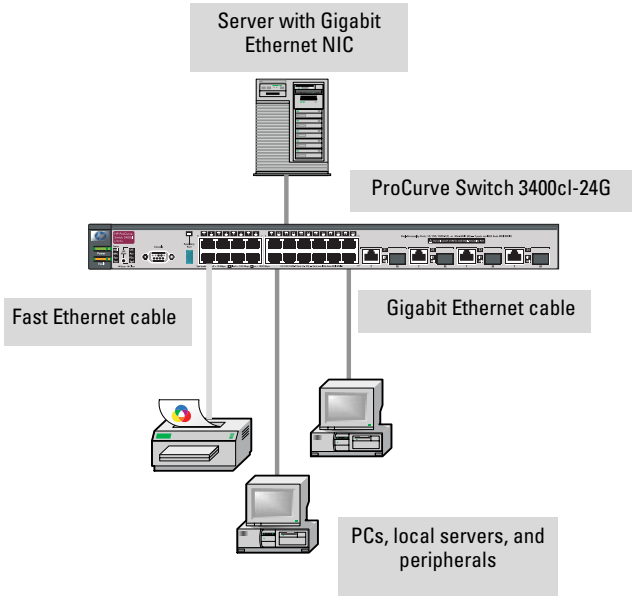

The Switch is designed to be used primarily as a desktop switch to which end nodes, printers and other peripherals, and servers are directly connected, as shown in the above illustration. Notice that the end node devices are connected to the switch by straight-through or crossover twisted-pair cables. Either cable type can be used because of the “IEEE Auto MDI/MDI-X” features on the Switch.

As a Segment Switch

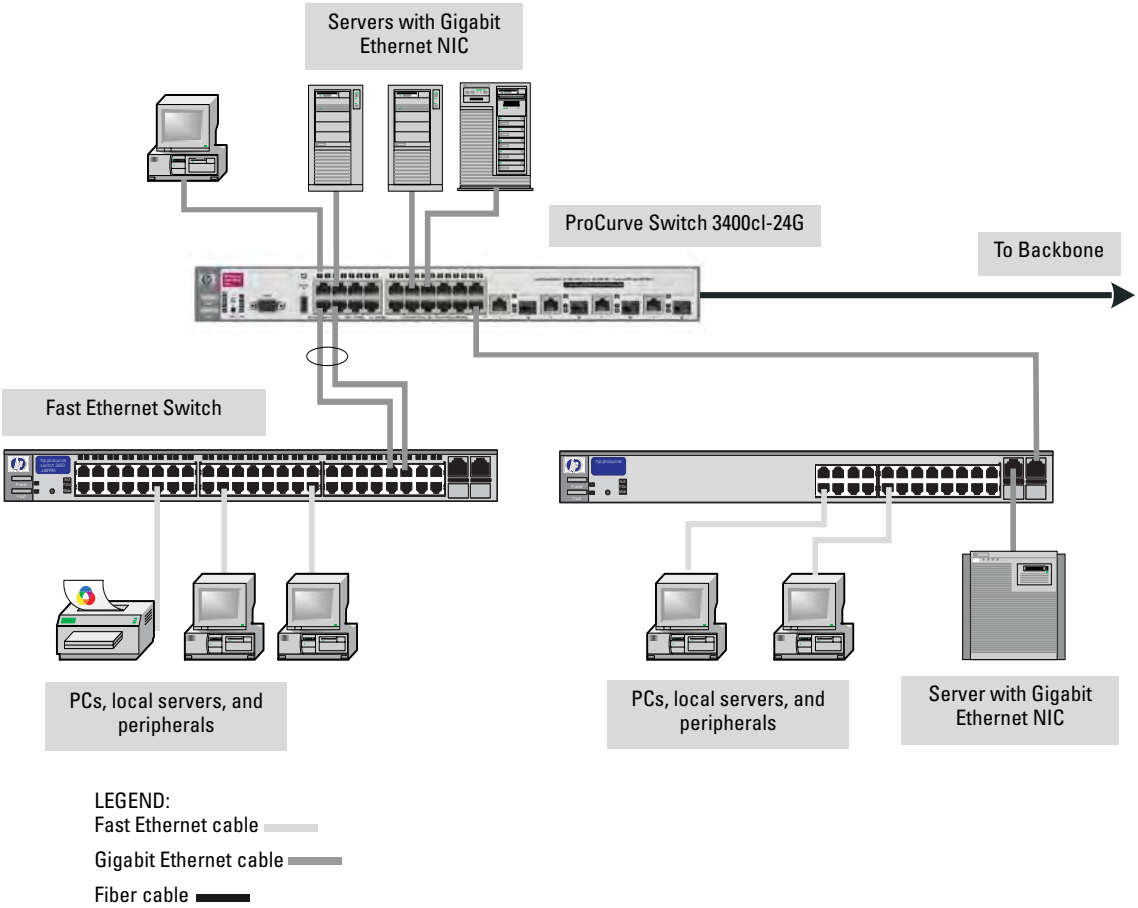

The Switch also works well as a segment switch. That is, with its high performance, it can be used for interconnecting network segments—simply connect the network hubs that form those segments to the switch, or you can also connect other switches.

In the illustration above, two "Fast" Ethernet hubs with PCs, printers, and local servers attached, are both connected to a Switch. The devices attached to the two hubs can now communicate with each other through the switch. They can also all communicate with the server that is connected to a 1000Base-T port on the switch.

Because the Switch has the “IEEE Auto MDI/MDI-X” features, the connections between the switch and the hubs, and between the switch and end nodes or servers can be through category 5 straight-through or crossover twisted-pair cable. Category 3 or 4 cable can also be used if the connection is 10 Mbps only. In all cases, the device ports must be configured to auto negotiate the link characteristics for this feature to work.

The switch, in turn, can be connected to a network backbone through fiber-optic cabling connected to a Gigabit-SX, -LX, or -LH mini-GBIC installed in the switch. Now, all the devices on these network segments can access other network resources that are connected elsewhere on the network backbone.

Connecting to a Backbone Switch

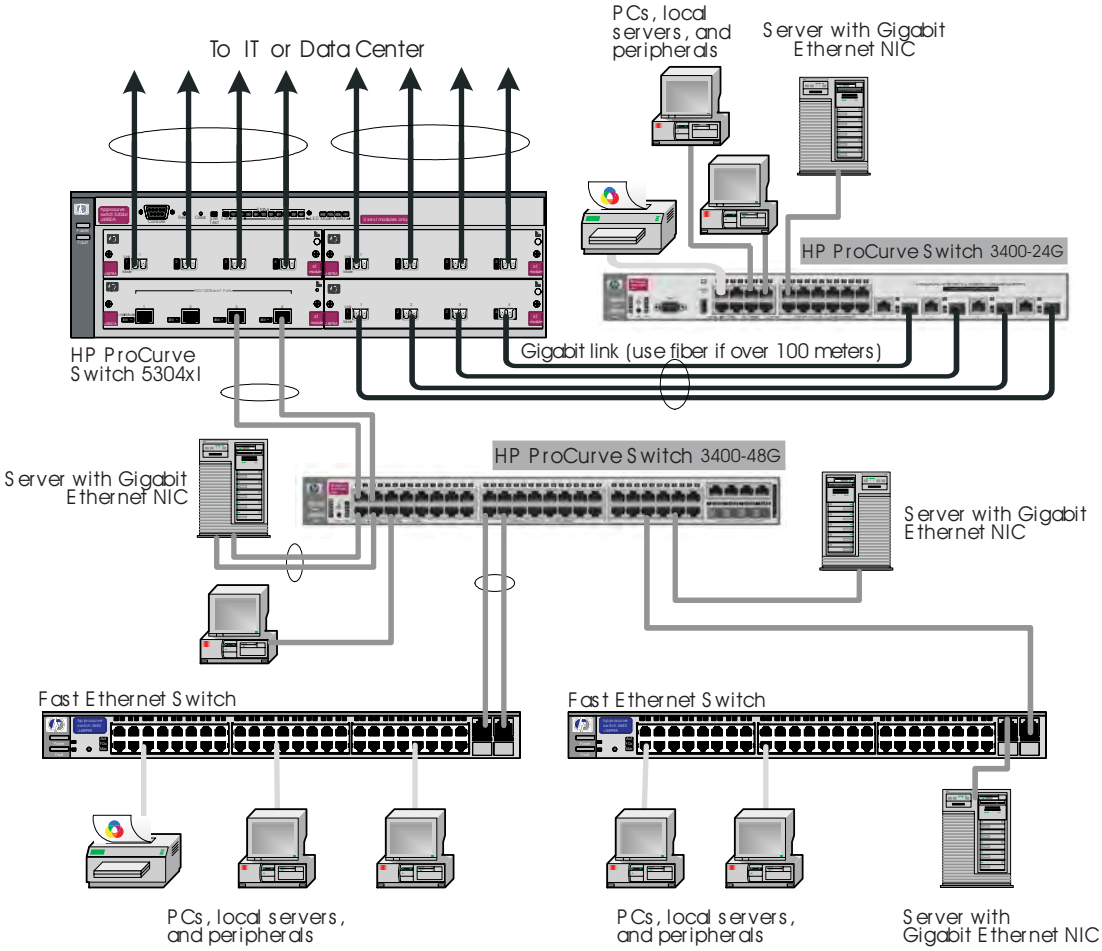

LEGEND:
Fast Ethernet cable
Gigabit Ethernet cable
Fiber cable

The simpler desktop and segment networks shown in the previous two examples can easily be combined and expanded. For example, you could use an ProCurve Switch 5304xl to interconnect each of your smaller switched workgroups to form a larger switched network. All the devices in this network can communicate with each other. With a Gigabit-SX Module, for example, in the Switch 5304xl, the entire switched topology could be connected to a campus backbone, as shown in the illustration above.

Note

In the Backbone Switch illustration, the 1000 Mbps fiber-optic connection between the Switch 3400cl-24G and the Switch 5304xl is by way of a Gigabit-SX mini-GBIC installed in the Switch 3400cl-24G and connected to a Gigabit-SX Module in the Switch 5304xl.

Stacking the Switch

The Series 3400cl Switch devices can be connected together, through standard network connections, and managed through a single IP address. Up to 16 switches can be connected together in such a "virtual stack".

You identify the switch as the "Commander" and give that switch an IP address. Up to 15 other switches in the network can then easily be configured as Members of the stack and managed through the Commander's IP address. The management includes Telnet access and web browser interface access to the Commander and to each Member switch through the Commander.

For more information on stacking Switches, please see the *Management and Configuration Guide*, which is on the Documentation CD-ROM that came with the switch.

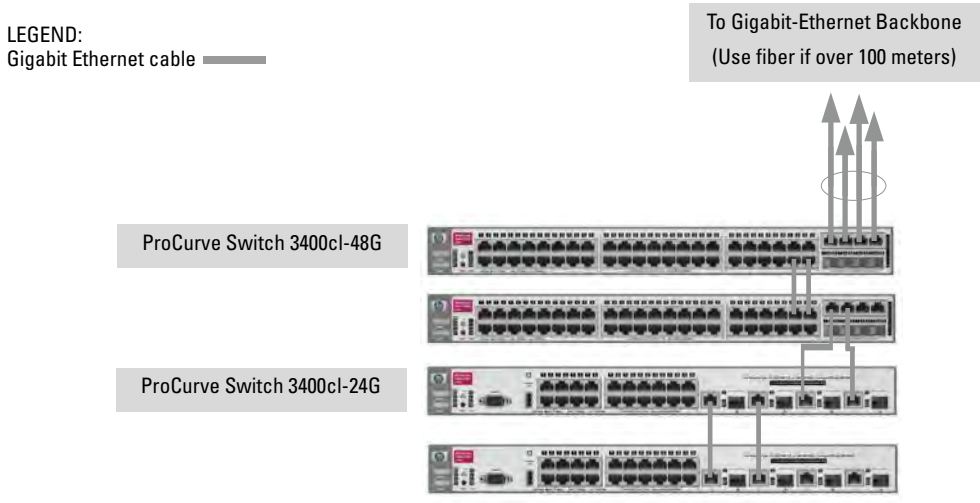

The Switch in a Redundant Topology

The redundant topology increases the availability of a single switch by protecting against single points of failure with the use of redundant switches and power supplies (RPS).

All hardware and paths are redundant. If any hardware failure occurs, I/O communication can still be completed through another path.

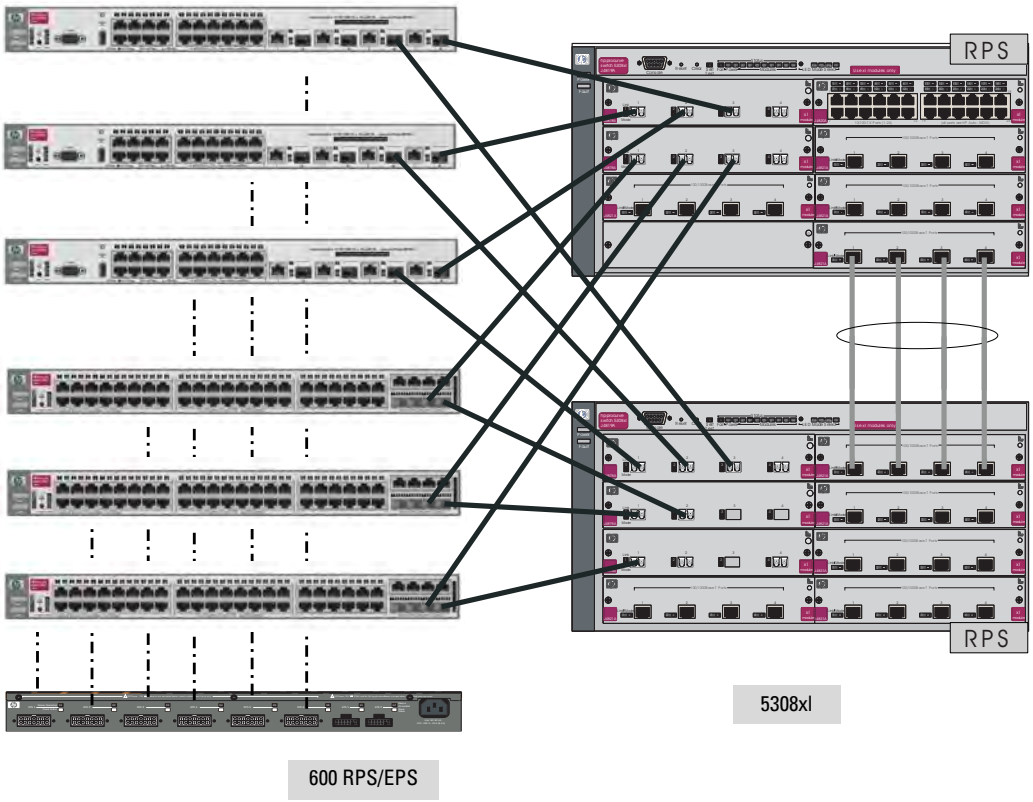

LEGEND:
Fast Ethernet cable
Gigabit Ethernet cable
RPS Power

— This page is intentionally unused. —

Getting Started With Switch Configuration

This chapter is a guide for using the console Switch Setup screen to quickly assign an IP (Internet Protocol) address and subnet mask to the switch, set a Manager password, and, optionally, configure other basic features.

For more information on using the switch console and the other switch management interfaces: the web browser interface and the SNMP management tool, ProCurve Manager, see the *Management and Configuration Guide*, which is on the Documentation CD-ROM that came with your switch.

Recommended Minimal Configuration

In the factory default configuration, the switch has no IP (Internet Protocol) address and subnet mask, and no passwords. In this state, it can be managed only through a direct console connection. To manage the switch through in-band (networked) access, you should configure the switch with an IP address and subnet mask compatible with your network. Also, you should configure a Manager password to control access privileges from the console and web browser interface. Other parameters in the Switch Setup screen can be left at their default settings or you can configure them with values you enter.

Many other features can be configured through the switch's console interface, to optimize the switch's performance, to enhance your control of the network traffic, and to improve network security. Once an IP address has been configured on the switch, these features can be accessed more conveniently through a remote Telnet session, through the switch's web browser interface, and from an SNMP network management station running a network management program, such as ProCurve Manager. For a listing of switch features available with and without an IP address, refer to "How IP Addressing Affects Switch Operation" in the *Management and Configuration Guide*, which is on the Documentation CD-ROM that came with your switch.

For more information on IP addressing, refer to "IP Configuration" in the *Management and Configuration Guide*.

Note

By default, the switch is configured to acquire an IP address configuration from a DHCP or Bootp server. To use DHCP/Bootp instead of the manual method described in this chapter, see “DHCP/Bootp Operation” in the *Management and Configuration Guide*, which is on the Documentation CD-ROM that came with your switch.

Using the Console Setup Screen

The quickest and easiest way to minimally configure the switch for management and password protection in your network is to use a direct console connection to the switch, start a console session, and access the Switch Setup screen.

1. Using the method described in the preceding section, connect a terminal device to the switch and display the switch console command (CLI) prompt (the default display).

   The CLI prompt appears displaying the switch model number:

   ProCurve Switch 3400cl-24G#

2. At the prompt, enter the **setup** command to display the Switch Setup screen. The following illustration shows the Setup screen with the default settings.

```
  ProCurve Switch 3400-24G                                    1-Jan- 2006    2:59:24
=========================- CONSOLE - MANAGER MODE -============================
                                 Switch Setup

  System Name :      Procurve Switch 3400-24G
  System Contact :
  Manager Password :                      Confirm Password :
  Logon Default : CLI                     Time Zone [0] : 0
  Community Name : public                 Spanning Tree Enabled [No] : No

  Default Gateway :
  Time Sync Method [None] : TIMEP
  TimeP Mode [Disabled] : Disabled

  IP Config [DHCP/Bootp] : DHCP/Bootp
  IP Address  :
  Subnet Mask :


 Actions->   Cancel     Edit     Save     Help

Enter System Name - up to 25 characters.
Use arrow keys to change field selection, <Space> to toggle field choices,
and <Enter> to go to Actions.
```

3. Use the **[Tab]** key to select the **Manager Password** field and enter a manager password of up to 16 characters.

4. **[Tab]** to the **IP Config (DHCP/Bootp)** field and use the Space bar to select the **Manual** option.
5. **[Tab]** to the **IP Address** field and enter the IP address that is compatible with your network.
6. **[Tab]** to the **Subnet Mask** field and enter the subnet mask used for your network.
7. Press [**Enter**], then **[S]** (for **Save**).

Here is some information on the fields in the Setup screen. For more information on these fields, see the *Management and Configuration Guide*, which is on the Documentation CD-ROM that came with your switch:

Parameter	Default	
System Name	blank	Optional; up to 25 characters, including spaces
System Contact	blank	Optional; up to 48 characters, including spaces
Manager Password	blank	Recommended; up to 16 characters (no blank spaces)
Logon Default	CLI	The default setting selects the command line interface for console access. The alternative is the menu interface.
Time Zone	0 (none)	Optional; 1440 to -1440. The number of minutes your location is to the West (-) or East (+) of GMT.
Community Name	public	Default setting recommended.
Spanning Tree Enabled	No	Default setting recommended unless STP is already running on your network or the switch will be used in complex network topologies.
Default Gateway	blank	Optional; Enter the IP address of the next-hop gateway node if network traffic needs to be able to reach off-subnet destinations.
Time Sync Method	None	Optional; The protocol the switch uses to acquire a time signal. The options are SNTP and TimeP.
TimeP Mode	Disabled	Optional; The method the switch uses to acquire the TimeP server address.
IP Config (DHCP/Bootp)	DHCP/Bootp	Set to Manual unless a DHCP/Bootp server is used on your network to configure IP addressing.
IP Address	xxx.xxx.xxx.xxx	Recommended; If you set IP Config to Manual, then enter an IP address compatible with your network.
Note: The IP address and subnet mask assigned for the switch must be compatible with the IP addressing used in your network. For more information on IP addressing, see the *Management and Configuration Guide,* which is on the Documentation CD-ROM that came with your switch.		
Subnet Mask	xxx.xxx.xxx.xxx	Recommended; If you entered an IP address, then enter a subnet mask compatible with your network.

Where to Go From Here

The above procedure configures your switch with a Manager password, IP address, and subnet mask. As a result, with the proper network connections, you can now manage the switch from a PC equipped with Telnet, a web browser interface, or from an SNMP-based network management station using a tool such as ProCurve Manager.

Some basic information on managing your switch is included in the next section. For more information on the console, web browser, and SNMP management interfaces and all the features that can be configured on the Switch 3400, please see the *Management and Configuration Guide*, which is on the Documentation CD-ROM that came with your switch.

To Recover from a Lost Manager Password: If you cannot start a console session at the manager level because of a lost Manager password, you can clear all passwords and user names by getting physical access to the switch and pressing and holding the Clear button for a full second.

Using the IP Address for Remote Switch Management

With your Switch 3400, you can use the switch's IP address to manage the switch from any PC that is on the same subnet as the switch. You can use either a Telnet session or a standard web browser to manage the switch.

Starting a Telnet Session

To access the switch through a Telnet session, follow these steps:

1. Make sure the switch is configured with an IP address and that the switch is reachable from the PC that is running the Telnet session (for example, by using a Ping command to the switch's IP address).
2. Start the Telnet program on a PC that is on the same subnet as the switch and connect to the switch's IP address.
3. You will see the copyright page and the message "Press any key to continue". Press a key, and you will then see the switch console command (CLI) prompt, for example:

   ProCurve Switch 3400-24G#

   Enter **help** or **?** to see a list of commands that can be executed at the prompt. Entering any command followed by **help** provides more detailed context help information about the command. Entering any command followed by **?** displays a list of options that are available at that point in the command entry.

Starting a Web Browser Session

Your Switch 3400 can be managed through a graphical interface that you can access from any PC or workstation on the network by running your web browser and typing in the switch's IP address as the URL. No additional software installation is required to make this interface available; it is included in the switch's onboard software.

The operating systems, web browsers, and Java support required to manage the switch through the browser interface are listed in the following table:

Operating System	Internet Explorer	Java Version
Windows 2000 SP4	5.5 SP2, 6.0 SP1	1.3.1_12 and 1.4.2_05
Windows XP SP1a	6.0 SP1	1.3.1_12 and 1.4.2_05
Windows Server 2003	6.0 SP1	1.3.1_12 and 1.4.2_05

The following illustration shows a typical web browser interface screen.

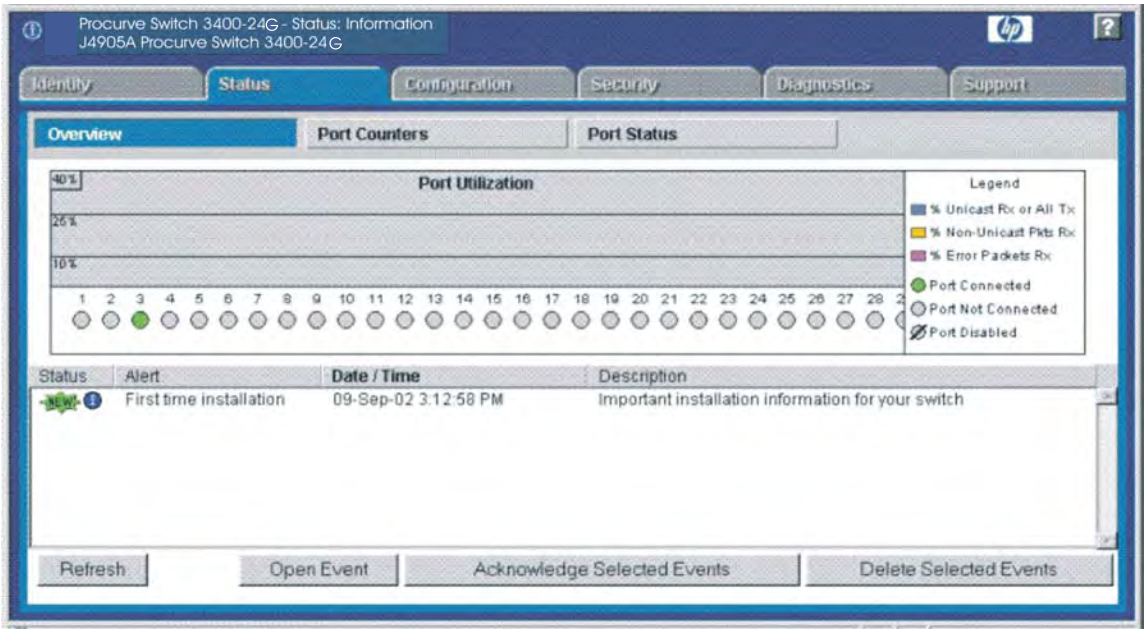

For more information on using the web browser interface, please see the *Management and Configuration Guide*, which is on the Documentation CD-ROM that came with your switch.

An extensive help system is also available for the web browser interface. To access the help system though, the subnet on which the switch is installed must have access to the internet, or ProCurve Manager needs to be installed on a network management station that is on the subnet.

Troubleshooting

This chapter describes how to troubleshoot your switch. This document describes troubleshooting mostly from a hardware perspective. You can perform more in-depth troubleshooting on the switch using the software tools available with the switch, including the full-featured console interface, the built-in web browser interface, and ProCurve Manager, the SNMP-based network management tool. For more information, see the chapter "Troubleshooting" in the *Management and Configuration Guide*, which is on the Documentation CD-ROM that came with your switch.

This chapter describes the following:

- basic troubleshooting tips (page 4-1)
- diagnosing with the LEDs (page 4-4)
- Proactive Networking tools (page 4-8)
- hardware diagnostic tests (page 4-9)
- restoring the factory default configuration (page 4-11)
- downloading new software to the Switch 3400 (page 4-12)
- HP Customer Support Services (page 4-13)

Basic Troubleshooting Tips

Most problems are caused by the following situations. Check for these items first when starting your troubleshooting:

- **Connecting to devices that have a fixed full-duplex configuration.** The RJ-45 ports are configured as "Auto". That is, when connecting to attached devices, the switch will operate in one of two ways to determine the link speed and the communication mode (half duplex or full duplex):
  - If the connected device is also configured to Auto, the switch will automatically negotiate both link speed and communication mode.
  - If the connected device has a fixed configuration, for example 100 Mbps, at half or full duplex, the switch will automatically sense the link speed, but will default to a communication mode of *half* duplex.

Because the switch behaves in this way *(in compliance with the IEEE 802.3 standard)*, if a device connected to the switch has a fixed configuration at *full* duplex, the device will not connect correctly to the switch. The result will be high error rates and very inefficient communications between the switch and the device.

Make sure that all devices connected to the switch are configured to auto negotiate, or are configured to connect at half duplex (all hubs are configured this way, for example).

- **Faulty or loose cables.** Look for loose or obviously faulty connections. If they appear to be OK, make sure the connections are snug. If that does not correct the problem, try a different cable.
- **Non-standard cables.** Non-standard and miswired cables may cause network collisions and other network problems, and can seriously impair network performance. Use a new correctly-wired cable or compare your cable to the cable in appendix B, "Cables and Connectors" for pinouts and correct cable wiring. A category 5 cable tester is a recommended tool for every 100Base-TX and 1000Base-T network installation.
- **Improper Network Topologies.** It is important to make sure you have a valid network topology. Common topology faults include excessive cable length and excessive repeater delays between end nodes. If you have network problems after recent changes to the network, change back to the previous topology. If you no longer experience the problems, the new topology is probably at fault. Sample topologies are shown at the end of chapter 2 in this book, and some topology configuration guidelines can be found online at the ProCurve Web site, *http://www.procurve.com*.

  In addition, you should make sure that your network topology contains ***no data path loops***. Between any two end nodes, there should be only one active cabling path at any time. Data path loops will cause broadcast storms that will severely impact your network performance.

  For your switch, if you wish to build redundant paths between important nodes in your network to provide some fault tolerance, you should enable **Spanning Tree Protocol** support on the switch. This ensures only one of the redundant paths is active at any time, thus avoiding data path loops. Spanning Tree can be enabled through the switch console, the web browser interface, or ProCurve Manager.

  The Series 3400cl Switch devices also support **Trunking**, which allows multiple network cables to be used for a single network connection without causing a data path loop. For more information on Spanning Tree and Trunking, see the *Management and Configuration Guide*, which is on the Documentation CD-ROM that came with your switch.

- **Check the port configuration.** A port on your switch may not be operating as you expect because it has been put into a "blocking" state by Spanning Tree, GVRP (automatic VLANs), or LACP (automatic trunking). (Note that the normal operation of the Spanning Tree, GVRP, and LACP features may put the port in a blocking state.) Or, the port just may have been configured as disabled through software.

  Use the switch console to determine the port's configuration and verify that there is not an improper or undesired configuration of any of the switch features that may be affecting the port. For more information, see the *Management and Configuration Guide*, which is on the Documentation CD-ROM that came with your switch.

For more information on possible network problems and their solutions, refer to the technical note "Troubleshooting LAN Performance and Intermittent Connectivity Problems", which can be found on the ProCurve Web site, *http://www.procurve.com*, in the Information Library section.

Diagnosing with the LEDs

Table 4-1 shows LED patterns on the switch and the switch modules that indicate problem conditions.

1. Check in the table for the LED pattern you see on your switch.
2. Refer to the corresponding diagnostic tip on the next few pages.

Table 4-1. LED Error Indicators

LED Pattern Indicating Problems							Diagnostic Tips
Power	**Fault**	**Module (Mdl) Status/ Fault****	**RPS Status**	**Test**	**Fan Status**	**Port LED** (in Link view mode)	
Off with power cord plugged in	*	*	*	*	*	*	❶
On	Prolonged On	*	*	Prolonged On	*	*	❷
On	Blinking†	*	*	Blinking†	*	*	❸
On	Blinking†	*	*	Off	Blinking†	*	❹
On	Blinking†	See tip 5	*	Blinking†	*	Blinking†	❺
On	Off	*	*	Off	*	Off with cable connected	❻
On	Off	*	*	Off	*	On, but the port is not communicating	❼
On	Blinking†	*	On	*	*	*	❽
On	Blinking†	F[1] Blinking† B[2] Blinking†	*	Blinking†	*	*	❾

*** This LED is not important for the diagnosis.**
† The blinking behavior is an on/off cycle once every 1.6 seconds, approximately.
**** The Module Fault LED is located on the module in the rear of the switch.**
[1] F - Front
[2] B - Back

Diagnostic Tips:

Tip	Problem	Solution
❶	The switch is not plugged into an active AC power source, or the switch's power supply may have failed.	1. Verify the power cord is plugged into an active power source and to the switch. Make sure these connections are snug. 2. Try power cycling the switch by unplugging and plugging the power cord back in. 3. If the Power LED is still not on, verify that the AC power source works by plugging another device into the outlet. Or try plugging the switch into a different outlet or try a different power cord. If the power source and power cord are OK and this condition persists, the switch power supply may have failed. Call your HP-authorized LAN dealer, or use the electronic support services from HP to get assistance. See the Customer Support/Warranty booklet for more information.
❷	A switch hardware failure has occurred. All the LEDs will stay on indefinitely.	Try power cycling the switch. If the fault indication reoccurs, the switch may have failed. Call your HP-authorized LAN dealer, or use the electronic support services from HP to get assistance. See the Customer Support/Warranty booklet for more information.
❸	The switch has experienced a software failure during self test.	1. Try resetting the switch by pressing the Reset button on the front of the switch, or by power cycling the switch. 2. If the fault indication reoccurs, attach a console to the switch (as indicated in chapter 2) and configure it to operate at 9600 baud. Then, reset the switch. Messages should appear on the console screen and in the console log identifying the error condition. You can view the console log at that point by selecting it from the console Main Menu. If necessary to resolve the problem, contact your HP-authorized LAN dealer, or use the electronic support services from HP to get assistance. See the Customer Support/ Warranty booklet for more information.
❹	One or both of the switch cooling fans may have failed.	Try disconnecting power from the switch and wait a few moments. Then reconnect the power to the switch and check the LEDs again. If the error indication reoccurs, one or both of the fans has failed. The switch has two fans and may continue to operate under this condition if the ambient temperature does not exceed normal room temperature, but for best operation, the switch should be replaced. Contact your HP-authorized LAN dealer, or use the electronic support services from HP to get assistance. See the Customer Support/Warranty booklet for more information.
❺	The network port for which the LED is blinking has experienced a self test or initialization failure. If the Mdl Status LED is blinking, the affected port is on the cl Module.	Try power cycling the switch. If the fault indication reoccurs, the switch port may have failed. Call your HP-authorized LAN dealer, or use the electronic support services from HP to get assistance. See the Customer Support/Warranty booklet for more information. If the port is a pluggable, verify it is one of the pluggables supported by the switch. Unsupported pluggables will be identified with this fault condition. The supported mini-GBICs are listed in Chapter 2, "Installing the Switch" on page 2-1, supported transceivers are listed in the *ProCurve Switch cl Modules Installation Guide*. The mini-GBICs are also tested when they are "hot-swapped"—installed or changed while the switch is powered on. To verify the port has failed, try removing and reinstalling the mini-GBIC without having to power off the switch. If the port fault indication reoccurs, you will have to replace the mini-GBIC.

continued on the next page

Tip	Problem	Solution
❻	The network connection is not working properly.	Try the following procedures: • For the indicated port, verify both ends of the cabling, at the switch and the connected device, are connected properly. • Verify the connected device and switch are both powered *on* and operating correctly. • Verify you have used the correct cable type for the connection: – For twisted-pair connections to the fixed 10/100 or 10/100/1000 ports, if the port is configured to "Auto" (auto negotiate), either straight-through or crossover cables can be used because of the switch's "HP Auto-MDIX" feature and the Auto MDI/MDI-X feature of the 10/100/1000-T port. ***Note:*** *If the switch port configuration is changed to one of the* ***fixed configuration*** *options (for example, 100 Mbps/Full Duplex), then the port operates as* ***MDI-X only*** *and you must use the correct type of cable for the connection. In general, for connecting an end node (MDI port) to the switch, use straight-through cable; for connecting to MDI-X ports on hubs, other switches, and routers, use crossover cable.* – For fiber-optic connections, verify the transmit port on the switch is connected to the receive port on the connected device, and the switch receive port is connected to the transmit port on the connected device. • For the dual-personality 10/100/1000-T ports, be sure a mini-GBIC is not installed in the associated slot. • For 1000Base-T connections, verify that the network cabling complies with the IEEE 802.3ab standard. the cable should be installed according to the ANSI/TIA/EIA-568-A-5 specifications. Cable testing should comply with the stated limitations for Attenuation, Near-End Crosstalk, Far-End Crosstalk, Equal-Level Far-End Crosstalk (ELFEXT), Multiple Disturber ELFEXT, and Return Loss. The cable verification process must include all patch cables from any end devices, including the switch, to any patch panels in the cabling path. • Verify the port has not been disabled through a switch configuration change. You can use the console interface, or, if you have configured an IP address on the switch, use the web browser interface, or ProCurve Manager network management software to determine the state of the port and re-enable the port if necessary. • Verify the switch port configuration matches the configuration of the attached device. For example, if the switch port is configured as "Auto", the port on the attached device also MUST be configured as "Auto". Depending on the port type, twisted-pair or fiber-optic, if the configurations don't match, the results could be a very unreliable connection, or no link at all. • If the other procedures don't resolve the problem, try using a different port or a different cable.

Tip	Problem	Solution
❼	The port may be improperly configured, or the port may be in a "blocking" state by the normal operation of the Spanning Tree, LACP, or IGMP features.	Use the switch console to see if the port is part of a dynamic trunk (through the LACP feature) or to see if Spanning Tree is enabled on the switch, and to see if the port may have been put into a "blocking" state by those features. The **show lacp** command displays the port status for the LACP feature; the **show spanning-tree** command displays the port status for Spanning Tree. Also check the Port Status screen using the **show interfaces** command to see if the port has been configured as "disabled". Other switch features that may affect the port operation include VLANs and IGMP. Use the switch console to see how the port is configured for these features. For software troubleshooting tips, see the chapter "Troubleshooting" in the *Management and Configuration Guide*, which is on the Documentation CD-ROM that came with your switch. Make sure also, the device at the other end of the connection is indicating a good link to the switch. If it is not, the problem may be with the cabling between the devices or the connectors on the cable.
❽	An RPS is connected but the switch has experienced a fault.	Refer to the 600/610 External Power Supplies documentation.
❾	Expansion cl module is plugged in but has experienced a fault.	Check the rear of the switch. Check the module LEDs for indications. This will only occur during an initialization self test.

Proactive Networking

The ProCurve Series 3400cl Switch devices have built-in management capabilities that proactively help you manage your network including:

- finding and helping you fix the most common network error conditions (for example, faulty network cabling, and non-standard network topologies)
- informing you of the problem with clear, easy-to-understand messages
- recommending network configuration changes to enhance the performance of your network

The following interfaces provide tests, indicators, and an event log that can be used to monitor the switch and its network connections and to help you take advantage of these proactive networking features:

- ProCurve Manager - an SNMP-based network management tool that is included with your switch.
- A graphical web browser interface that you can use to manage your switch from a PC running a supported web browser, for example Microsoft Internet Explorer, and Netscape Communicator.
- A full-featured easy-to-use console interface that you can access by connecting a standard terminal or PC running a terminal emulator to the switch's console port. The cable to make that connection is provided with your switch. The console interface is also accessible through a Telnet connection.

For more information on using these software tools to diagnose and manage your switch, see the "Troubleshooting" chapter in the *Management and Configuration Guide*, which is on the Documentation CD-ROM that came with your switch.

Hardware Diagnostic Tests

Testing the Switch by Resetting It

If you believe the switch is not operating correctly, you can reset the switch to test its circuitry and operating code. To reset a switch, either:

- unplug and plug in the power cord (power cycling)
- press the Reset button on the front of the switch

Power cycling the switch and pressing the Reset button both cause the switch to perform its power-on self test, which almost always will resolve any temporary operational problems. These reset processes also cause any network traffic counters to be reset to zero, and cause the System Up Time timer to reset to zero.

Checking the Switch LEDs

The self test passes if the Fault and Self Test LEDs on the front of the switch go off after approximately 50 seconds. If these LEDs stay on longer than 60 seconds or begin blinking, there may be a problem with the switch.

See “Diagnosing With the LEDs” on page 4-4 for information on interpreting the LED patterns and LED behaviors in chapter one.

Checking Console Messages

Useful diagnostic messages may be displayed on the console screen when the switch is reset. As described in chapter 2 under step 7, “Connect a Console to the Switch”, connect a PC running a VT-100 terminal emulator program or a standard VT-100 terminal to the switch’s Console Port and configure it to run at 9600 baud, and with the other terminal communication settings shown on page 2-24. Then, when you reset the switch, note the messages that are displayed. Additionally, you can check the switch event log, which can be accessed from the console using the **show log** command, or from the console Main Menu.

Testing Twisted-Pair Cabling

Network cables that fail to provide a link or provide an unreliable link between the switch and the connected network device may not be compatible with the IEEE 802.3 Type 10Base-T, 100Base-TX, or 1000Base-T standards. The twisted-pair cables attached to the Switch 3400 must be compatible with the appropriate standards. To verify your cable is compatible with these standards, use a qualified cable test device.

Testing Switch-to-Device Network Communications

You can perform the following communication tests to verify the network is operating correctly between the switch and any connected device that can respond correctly to the communication test.

- Link Test -- a physical layer test that sends IEEE 802.2 test packets to any device identified by its MAC address.
- Ping Test -- a network layer test used on IP networks that sends test packets to any device identified by its IP address.

These tests can be performed through the switch console interface from a terminal connected to the switch or through a Telnet connection, or from the switch's web browser interface. For more information, see the *Management and Configuration Guide*, which is on the Documentation CD-ROM that came with your switch.

These tests can also be performed from an SNMP network management station running a program that can manage the switch, for example, ProCurve Manager.

Testing End-to-End Network Communications

Both the switch and the cabling can be tested by running an end-to-end communications test -- a test that sends known data from one network device to another through the switch. For example, if you have two PCs on the network that have LAN adapters between which you can run a link-level test or Ping test through the switch, you can use this test to verify that the entire communication path between the two PCs is functioning correctly. See your LAN adapter documentation for more information on running a link test or Ping test.

Restoring the Factory Default Configuration

As part of your troubleshooting process on the switch, it may become necessary to return the switch configuration to the factory default settings. This process momentarily interrupts the switch operation, clears any passwords, clears the console event log, resets the network counters to zero, performs a complete self test, and reboots the switch into its factory default configuration including deleting the IP address, if one is configured.

Note

This process removes all switch configuration changes you have made from the factory default settings. This includes, for example, configuration of VLANs, Spanning Tree, trunks, and stacking. Returning the configuration of these features to their factory default settings (usually disabling them) may result in network connectivity issues.

If the switch has a valid configuration, and you are restoring the factory default settings for a reason other than configuration problems, you should save the switch configuration prior to performing the factory default reset. Then, after the reset and resolution of the original problem, you can restore the saved configuration to the switch. For both the save and restore processes, you can use the console **copy** command. For more information on this command, see the *Management and Configuration Guide*, which is on the Documentation CD-ROM that came with your switch.

You can restore the factory default configuration either on the switch itself, or through the switch console.

To execute the factory default reset on the switch, perform these steps:

1. Using pointed objects, simultaneously press both the Reset and Clear buttons on the front of the switch.
2. Continue to press the Clear button while releasing the Reset button.
3. When the Self Test LED begins to blink, release the Clear button.

   The switch will then complete its self test and begin operating with its configuration restored to the factory default settings.

To restore the factory default configuration using the console, execute the **erase startup-config** command from the console command prompt.

Downloading New Switch Software

When product enhancements occur for the switch, new software can be downloaded to the switch through several methods, for product enhancements and new features. For more information, see the *Management and Configuration Guide*, which is on the Documentation CD-ROM that came with your switch.

The new switch software would be available on the ProCurve Web site, *http://www.procurve.com*.

ProCurve Customer Support Services

If you are still having trouble with your switch, ProCurve offers support 24 hours a day, seven days a week through the use of a number of automated electronic services. See the Customer Support/Warranty booklet that came with your switch for information on how to use these services to get technical support. The ProCurve Web site, *http://www.procurve.com* also provides up-to-date support information.

Additionally, your ProCurve authorized network reseller can provide you with assistance, both with services that they offer and with services offered by ProCurve.

Before Calling Support

Before calling your networking dealer or ProCurve Support, to make the support process most efficient, you first should have retrieved the following information:

Information Item	Information Location
• product identification, including mini-GBICs	the front of the switch, ProCurve Switch 3400 (J4905A or J4906A, respectively), and on labels on the mini-GBICs
• details about the switch's status including the software (OS) version, a copy of the switch configuration, a copy of the switch Event Log, and a copy of the switch status and counters information	switch console: **show tech** command
• copy of your network topology map, including network addresses assigned to the relevant devices	your network records

— This page is intentionally unused. —

Specifications

Physical

	3400cl-24G (J4905A)	3400cl-48G (J4906A)
Width:	44.3 cm (17.42 in)	44.3 cm (17.42 in)
Depth:	36.7 cm (14.4 in)	43.0 cm (16.9 in)
Height:	4.4 cm (1.7 in)	4.4 cm (1.7 in)
Weight:	4.62 kg (10.20 lbs)	4.88 kg (10.75 lbs)

Electrical

The switch automatically adjusts to any voltage between 100-127 and 200-240 volts and either 50 or 60 Hz.

	3400cl-24G (J4905A)	3400cl-48G (J4906A)
AC voltage:	100-127/200-240 volts	100-127/200-240 volts
Maximum current:	2.0A/1.0A	3.0A/1.5A
Frequency range:	50/60 Hz	50/60 Hz

Environmental

	Operating	Non-Operating
Temperature:	0°C to 55°C (32°F to 131°F)	-40°C to 70°C (-40°F to 158°F)
Relative humidity: (non-condensing)	15% to 95% at 40°C (104°F)	15% to 90% at 65°C (149°F)
Maximum altitude:	4.6 km (15,000 ft)	4.6 km (15,000 ft)

Acoustic

Geraeuschemission LwA=48 dB am fiktiven Arbeitsplatz nach DIN 45635 T.19

Noise Emission LwA=48 dB at virtual workspace according to DIN 45635 T.19

Connectors

- The 10/100/1000 Mbps RJ-45 twisted-pair ports are compatible with the following standards:
  - IEEE 802.3ab 1000Base-T
  - IEEE 802.3u 100Base-TX
  - IEEE 802.3 10Base-T
- The 1000 Mbps LC fiber-optic ports on the Gigabit-SX and Gigabit-LX mini-GBIC transceivers are compatible with the IEEE 802.3z Gigabit-SX and Gigabit-LX standards.

Safety

Complies with:

- EN60950 / IEC 950
- CSA 22.2 No. 950
- UL 1950

Lasers

The Gigabit-SX LC mini-GBIC, and the Gigabit-LX LC mini-GBIC, both of which can be installed in the Switch 3400, are Class 1 Laser Products.

Laser Klasse 1
These mini-GBICs comply with IEC 825-2: 1993.

Switch Ports and Network Cables

This appendix includes switch connector information and network cable information for cables that should be used with the Switch 3400, including minimum pin-out information and specifications for twisted-pair cables.

Note

Incorrectly wired cabling is the most common cause of problems for LAN communications. HP recommends that you work with a qualified LAN cable installer for assistance with your cabling requirements.

Switch Ports

The fixed RJ-45 10/100Base-TX and 10/100/1000Base-T ports on the switch accept 100-ohm unshielded and shielded twisted-pair cable with RJ-45 connectors as described on the next page.

Twisted-Pair Cables

10 Mbps Operation	Category 3, 4, or 5 100-ohm unshielded twisted-pair (UTP) or shielded twisted-pair (STP) cable, complying with IEEE 802.3 Type 10Base-T specifications, fitted with RJ-45 connectors
100 Mbps Operation	Category 5 100-ohm UTP or STP cable, complying with IEEE 802.3u 100Base-TX specifications, fitted with RJ-45 connectors
1000 Mbps Operation	Category 5 100-ohm 4-pair UTP or STP cable, complying with IEEE 802.3ab 1000Base-T specifications, fitted with RJ-45 connectors—Category 5E or better is recommended *(please see "Note on 1000Base-T Cable Requirements", below)*

Note on 1000Base-T Cable Requirements. The Category 5 networking cables that work for 100Base-TX connections should also work for 1000Base-T, as long as all four-pairs are connected. But, for the most robust connections you should use cabling that complies with the Category 5e specifications, as described in Addendum 5 to the TIA-568-A standard (ANSI/TIA/EIA-568-A-5).

Because of the increased speed provided by 1000Base-T (Gigabit-T), network cable quality is more important than for either 10Base-T or 100Base-TX. Cabling plants being used to carry 1000Base-T networking must comply with the IEEE 802.3ab standards. In particular, the cabling must pass tests for Attenuation, Near-End Crosstalk (NEXT), and Far-End Crosstalk (FEXT). Additionally, unlike the cables for 100Base-TX, the 1000Base-T cables must pass tests for Equal-Level Far-End Crosstalk (ELFEXT) and Return Loss.

When testing your cabling, be sure to include the patch cables that connect the switch and other end devices to the patch panels on your site. The patch cables are frequently overlooked when testing cable and they must also comply with the cabling standards.

Fiber-Optic

1000Base-SX	62.5/125 µm or 50/125 µm (core/cladding) diameter, graded-index, multimode fiber-optic cables, complying with the ITU-T G.651 and ISO/IEC 793-2 Type A1b or A1a respectively, fitted with LC connectors.
1000Base-LX	single mode fiber-optic cables, complying with the ITU-T G.652 and ISO/IEC 793-2 Type B1 standards, fitted with LC connectors OR 62.5/125 µm or 50/125 µm (core/cladding) diameter, graded-index, multimode fiber-optic cables, complying with the ITU-T G.651 and ISO/IEC 793-2 Type A1b or A1a respectively, fitted with LC connectors **Note:** Multimode fiber-optic cabling may be used for a 1000Base-LX application, but a **mode conditioning patch cord** may be needed. See "Mode Conditioning Patch Cord for Gigabit-LX" on page B-3 for more information.
1000Base-LH	single mode fiber-optic cables, complying with the ITU-T G.652 and ISO/IEC 793-2 Type B1 standards, fitted with LC connectors

Mode Conditioning Patch Cord for Gigabit-LX

The following information applies to installations in which multimode fiber-optic cables are connected to a Gigabit-LX port.

Note

Mode Conditioning Patch Cord cables only apply to one Gigabit operation. Mode Conditioning Patch Cord cables are not supported for 10 Gigabit operation.

Unlike Gigabit-SX, which connects to only multimode fiber-optic cabling, Gigabit-LX can use either single-mode or multimode cable. Multimode cable has a design characteristic called “Differential Mode Delay”, which requires that the transmission signals be “conditioned” to compensate for the cable design and thus prevent resulting transmission errors. Since Gigabit-SX is designed to operate only with multimode cable, Gigabit-SX mini-GBICs can provide that transmission conditioning internally.

Gigabit-LX mini-GBICs, since they are designed to operate with both single-mode and multimode cable, do not provide the transmission conditioning internally. Thus, under certain circumstances, depending on the cable used and the lengths of the cable runs, an external **Mode Conditioning Patch Cord** may need to be installed between the Gigabit-LX transmitting device and the multimode network cable to provide the transmission conditioning.

If you experience a high number of transmission errors on the Gigabit-LX ports, usually CRC or FCS errors, you may need to install one of these patch cords between the Gigabit-LX port in your switch and your multimode fiber-optic network cabling, and between the Gigabit-LX transmission device and the network cabling at the other end of the multimode fiber-optic cable run. A patch cord must be installed at both ends.

The patch cord consists of a short length of single-mode fiber cable coupled to graded-index multimode fiber cable on the transmit side, and only multimode cable on the receive side. The section of single-mode fiber is connected in such a way that it minimizes the effects of the differential mode delay in the multimode cable.

Note

If you are using good quality graded-index multimode fiber cable that adheres to the standards listed on page 2-5, there should not be a need to use mode conditioning patch cords. This is especially true if the fiber runs in your network are relatively short. If you are using *single-mode* fiber-optic cabling, there is no need to use mode conditioning patch cords. Connect the single-mode network cable directly to the Gigabit-LX mini-GBIC.

Installing the Patch Cord

As shown in the illustration below, connect the patch cord to the Gigabit-LX mini-GBIC with the section of single-mode fiber plugged in to the Tx (transmit) port. Then, connect the other end of the patch cord to your network cabling patch panel, or directly to the network multimode fiber.

If you connect the patch cord directly to the network cabling, you may need to install a **female-to-female adapter** to allow the cables to be connected together.

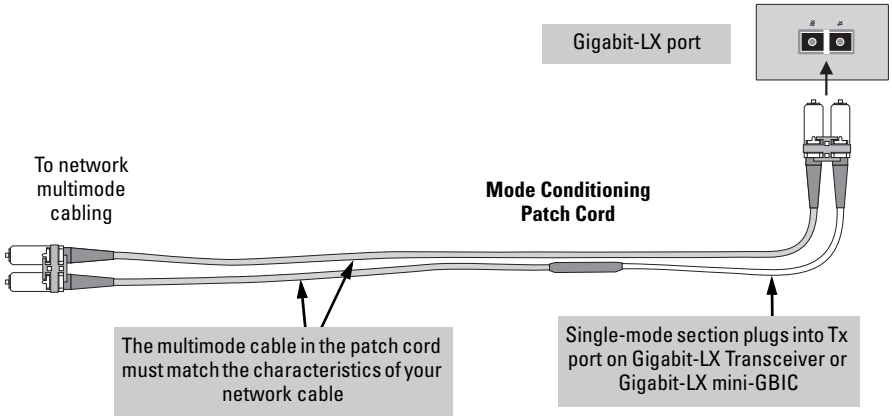

Make sure you purchase a patch cord that has LC connectors on the end that connects to the Gigabit-LX mini-GBIC, and has multimode fibers that match the characteristics of the multimode fiber in your network.

Recommended Patch Cords

Hewlett-Packard maintains a list of recommended Mode Conditioning Patch Cords that have been tested and verified to operate correctly with the ProCurve Gigabit-LX Transceiver and ProCurve Gigabit-LX LC mini-GBIC.

The list is on the ProCurve Web site, *http://www.procurve.com*, in the Technical Support section.

Twisted-Pair Cable/Connector Pin-Outs

Auto-MDIX Feature: The 10/100/1000-T ports support the IEEE 802.3ab standard, which includes the "Auto MDI/MDI-X" feature. In the default configuration, "Auto", the ports on the Switch 3400 all automatically detect the type of port on the connected device and operate as either an MDI or MDI-X port, whichever is appropriate. So for any connection, a straight-through twisted-pair cable can be used -- *you no longer have to use crossover cables*, although crossover cables can also be used for any of the connections.

If you connect a Switch 3400 twisted-pair port to another switch or hub, which typically have MDI-X ports, the Switch 3400 port automatically operates as an MDI port. If you connect it to an end node, such as a server or PC, which typically have MDI ports, the Switch 3400 port operates as an MDI-X port. In all cases, you can use standard straight-through cables or crossover cables.

If you happen to use a correctly wired crossover cable, though, the switch will still be able to automatically detect the MDI/MDI-X operation and link correctly to the connected device.

Note

Using Fixed Configurations. If the port configuration is changed to any of the fixed configurations though, for example 100 Mbps/full duplex, the port operates as MDI-X only and the correct cable type must be used: for connections to MDI ports, such as end nodes, use a straight-through cable; for connections to MDI-X ports, such as on hubs and other switches, use a crossover cable.

Other Wiring Rules:

- All twisted-pair wires used for 10 Mbps, and 100 Mbps operation must be twisted through the entire length of the cable. The wiring sequence must conform to EIA/TIA 568-B (not USOC). See "Twisted-Pair Cable Pin Assignments" later in this appendix for a listing of the signals used on each pin.
- For 1000Base-T connections, all four pairs of wires in the cable must be available for data transmission. See *"Note on 1000Base-T Cable Requirements" on page B-1* for more information on 1000Base-T cabling.
- For 10 Mbps connections to the ports, you can use Category 3, 4, or 5 unshielded twisted-pair cable, as supported by the IEEE 802.3 Type 10Base-T standard.

- For 100 Mbps connections to the ports, use 100-ohm Category 5 UTP or STP cable only, as supported by the IEEE 802.3u Type 100Base-TX standard.
- For 1000 Mbps connections, 100-ohm Category 5e or better cabling is recommended.

Straight-Through Twisted-Pair Cable for 10 Mbps or 100 Mbps Network Connections

Because of the HP Auto-MDIX operation of the 10/100 ports on the switch, for all network connections, to PCs, servers or other end nodes, or to hubs or other switches, you can use straight-through cables.

If any of these ports are given a fixed configuration, for example 100 Mbps/ Full Duplex, the ports operate as MDI-X ports, and straight-through cables must be then used for connections to PC NICs and other MDI ports.

Cable Diagram

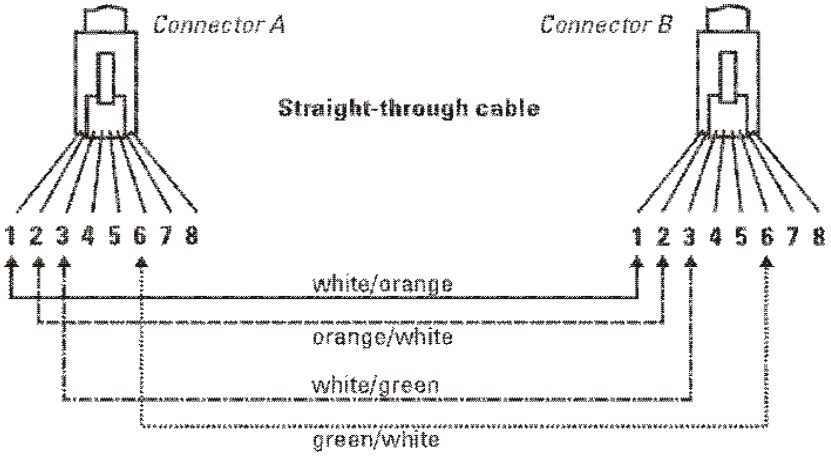

Note

Pins 1 and 2 on connector "A" *must* be wired as a twisted pair to pins 1 and 2 on connector "B".
Pins 3 and 6 on connector "A" *must* be wired as a twisted pair to pins 3 and 6 on connector "B".
Pins 4, 5, 7, and 8 are not used in this application, although they may be wired in the cable.

Pin Assignments

Switch End (MDI-X)		Computer, Transceiver, or Other End	
Signal	**Pins**	**Pins**	**Signal**
receive +	1 ←	1	transmit +
receive -	2 ←	2	transmit -
transmit +	3 →	3	receive +
transmit -	6 →	6	receive -

Crossover Twisted-Pair Cable for 10 Mbps or 100 Mbps Network Connection

The HP Auto-MDIX operation of the 10/100 ports on the switch also allows you to use crossover cables for all network connections, to PCs, servers or other end nodes, or to hubs or other switches.

If any of these ports are given a fixed configuration, for example 100 Mbps/ Full Duplex, the ports operate as MDI-X ports, and crossover cables *must* be then used for connections to hubs or switches or other MDI-X network devices.

Cable Diagram

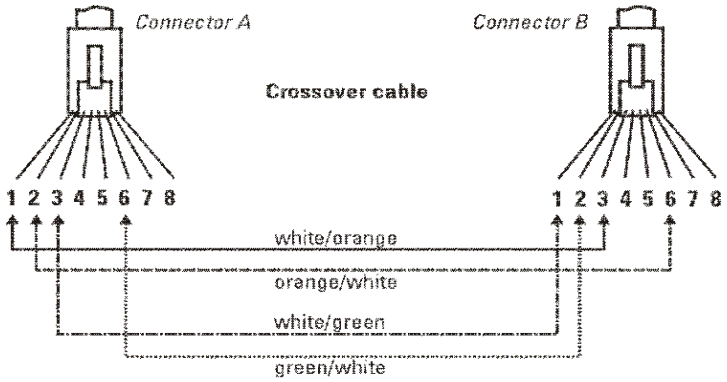

Note

Pins 1 and 2 on connector “A” *must* be wired as a twisted pair to pins 3 and 6 on connector “B”.
Pins 3 and 6 on connector “A” *must* be wired as a twisted pair to pins 1 and 2 on connector “B”.
Pins 4, 5, 7, and 8 are not used in this application, although they may be wired in the cable.

Pin Assignments

Switch End (MDI-X)		Hub or Switch Port, or Other MDI-X Port End	
Signal	**Pins**	**Pins**	**Signal**
receive +	1	6	transmit -
receive -	2	3	transmit +
transmit +	3	2	receive -
transmit -	6	1	receive +

Straight-Through Twisted-Pair Cable for 1000 Mbps Network Connections

1000Base-T connections require that all four pairs or wires be connected.

Cable Diagram

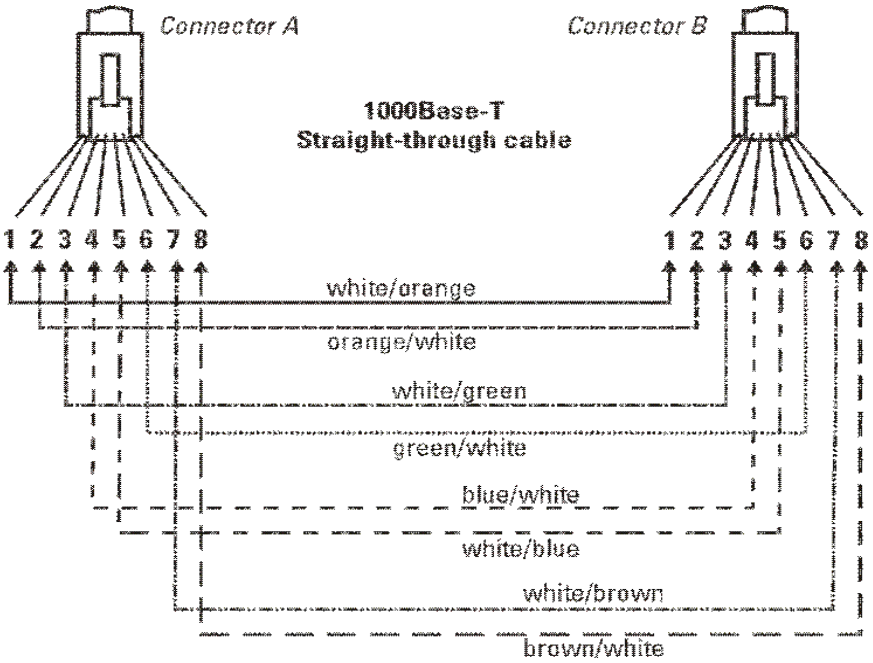

Note

Pins 1 and 2 on connector "A" *must* be wired as a twisted pair to pins 1 and 2 on connector "B".
Pins 3 and 6 on connector "A" *must* be wired as a twisted pair to pins 3 and 6 on connector "B".
Pins 4 and 5 on connector "A" *must* be wired as a twisted pair to pins 4 and 5 on connector "B".
Pins 7 and 8 on connector "A" *must* be wired as a twisted pair to pins 7 and 8 on connector "B".

Pin Assignments

For 1000Base-T operation, all four pairs of wires are used for both transmit and receive.

— This page is intentionally unused. —

Safety and EMC Regulatory Statements

Safety Information

!	Documentation reference symbol. If the product is marked with this symbol, refer to the product documentation to get more information about the product.
WARNING	A **WARNING** in the manual denotes a hazard that can cause injury or death.
Caution	A Caution in the manual denotes a hazard that can damage equipment.
	Do not proceed beyond a **WARNING** or Caution notice until you have understood the hazardous conditions and have taken appropriate steps.

Grounding
These are safety class I products and have protective earthing terminals. There must be an uninterruptible safety earth ground from the main power source to the product's input wiring terminals, power cord, or supplied power cord set. Whenever it is likely that the protection has been impaired, disconnect the power cord until the ground has been restored.

For LAN cable grounding:

- If your LAN covers an area served by more than one power distribution system, be sure their safety grounds are securely interconnected.
- LAN cables may occasionally be subject to hazardous transient voltages (such as lightning or disturbances in the electrical utilities power grid). Handle exposed metal components of the network with caution.

Servicing
There are no user-serviceable parts inside these products. Any servicing, adjustment, maintenance, or repair must be performed only by service-trained personnel.

These products do not have a power switch; they are powered on when the power cord is plugged in.

Informations concernant la sécurité

Symbole de référence à la documentation. Si le produit est marqué de ce symbole, reportez-vous à la documentation du produit afin d'obtenir des informations plus détaillées.

WARNING Dans la documentation, un **WARNING** indique un danger susceptible d'entraîner des dommages corporels ou la mort.

Caution Un texte de mise en garde intitulé Caution indique un danger susceptible de causer des dommages à l'équipement.

Ne continuez pas au-delà d'une rubrique **WARNING** ou Caution avant d'avoir bien compris les conditions présentant un danger et pris les mesures appropriées.

Cet appareil est un produit de classe I et possède une borne de mise à la terre. La source d'alimentation principale doit être munie d'une prise de terre de sécurité installée aux bornes du câblage d'entrée, sur le cordon d'alimentation ou le cordon de raccordement fourni avec le produit. Lorsque cette protection semble avoir été endommagée, débrancher le cordon d'alimentation jusqu'à ce que la mise à la terre ait été réparée.

Mise à la terre du câble de réseau local:

- si votre réseau local s'étend sur une zone desservie par plus d'un système de distribution de puissance, assurez-vous que les prises de terre de sécurité soient convenablement interconnectées.
- Les câbles de réseaux locaux peuvent occasionnellement être soumis à des surtensions transitoires dangereuses (telles que la foudre ou des perturbations dans le réseau d'alimentation public). Manipulez les composants métalliques du réseau avec précautions.

Aucune pièce contenue à l'intérieur de ce produit ne peut être réparée par l'utilisateur. Tout dépannage, réglage, entretien ou réparation devra être confié exclusivement à un personnel qualifié.

Cet appareil ne comporte pas de commutateur principal ; la mise sous tension est effectuée par branchement du cordon d'alimentation.

Hinweise zur Sicherheit

!	Symbol für Dokumentationsverweis. Wenn das Produkt mit diesem Symbol markiert ist, schlagen Sie bitte in der Produktdokumentation nach, um mehr Informationen über das Produkt zu erhalten.
WARNING	Eine **WARNING** in der Dokumentation symbolisiert eine Gefahr, die Verletzungen oder sogar Todesfälle verursachen kann.
Caution	Caution in der Dokumentation symbolisiert eine Gefahr, die dis Gerät beschädigen kann.
	Fahren Sie nach dem Hinweis **WARNING** oder Caution erst fort, nachdem Sie den Gefahrenzustand verstanden und die entsprechenden Maßnahmen ergriffen haben.

Dies ist ein Gerät der Sicherheitsklasse I und verfügt über einen schützenden Erdungsterminal. Der Betrieb des Geräts erfordert eine ununterbrochene Sicherheitserdung von der Hauptstromquelle zu den Geräteingabeterminals, den Netzkabeln oder dem mit Strom belieferten Netzkabelsatz voraus. Sobald Grund zur Annahme besteht, daß der Schutz beeinträchtigt worden ist, das Netzkabel aus der Wandsteckdose herausziehen, bis die Erdung wiederhergestellt ist.

Für LAN-Kabelerdung:

- Wenn Ihr LAN ein Gebiet umfaßt, das von mehr als einem Stromverteilungssystem beliefert wird, müssen Sie sich vergewissern, daß die Sicherheitserdungen fest untereinander verbunden sind.
- LAN-Kabel können gelegentlich gefährlichen Übergangsspannungen ausgesetzt werden (beispielsweise durch Blitz oder Störungen in dem Starkstromnetz des Elektrizitätswerks). Bei der Handhabung exponierter Metallbestandteile des Netzwerkes Vorsicht walten lassen.

Dieses Gerät enthält innen keine durch den Benutzer zu wartenden Teile. Wartungs-, Anpassungs-, Instandhaltungs- oder Reparaturarbeiten dürfen nur von geschultem Bedienungspersonal durchgeführt werden.

Dieses Gerät hat keinen Netzschalter; es wird beim Anschließen des Netzkabels eingeschaltet.

Considerazioni sulla sicurezza

⚠	Simbolo di riferimento alla documentazione. Se il prodotto è contrassegnato da questo simbolo, fare riferimento alla documentazione sul prodotto per ulteriori informazioni su di esso.
WARNING	La dicitura **WARNING**denota un pericolo che può causare lesioni o morte.
Caution	La dicituraCaution denota un pericolo che può danneggiare le attrezzature.
	Non procedere oltre un avviso di **WARNING** o di Cautionprima di aver compreso le condizioni di rischio e aver provveduto alle misure del caso.

Questo prodotto è omologato nella classe di sicurezza I ed ha un terminale protettivo di collegamento a terra. Dev'essere installato un collegamento a terra di sicurezza, non interrompibile che vada dalla fonte d'alimentazione principale ai terminali d'entrata, al cavo d'alimentazione oppure al set cavo d'alimentazione fornito con il prodotto. Ogniqualvolta vi sia probabilità di danneggiamento della protezione, disinserite il cavo d'alimentazione fino a quando il collegaento a terra non sia stato ripristinato.

Per la messa a terra dei cavi LAN:

- se la vostra LAN copre un'area servita da più di un sistema di distribuzione elettrica, accertatevi che i collegamenti a terra di sicurezza siano ben collegati fra loro;
- i cavi LAN possono occasionalmente andare soggetti a pericolose tensioni transitorie (ad esempio, provocate da lampi o disturbi nella griglia d'alimentazione della società elettrica); siate cauti nel toccare parti esposte in metallo della rete.

Nessun componente di questo prodotto può essere riparato dall'utente. Qualsiasi lavoro di riparazione, messa a punto, manutenzione o assistenza va effettuato esclusivamente da personale specializzato.

Questo apparato non possiede un commutatore principale; si mette scotto tensione all'inserirsi il cavo d'alimentazione.

Consideraciones sobre seguridad

Símbolo de referencia a la documentación. Si el producto va marcado con este símbolo, consultar la documentación del producto a fin de obtener mayor información sobre el producto.

WARNING Una **WARNING** en la documentación señala un riesgo que podría resultar en lesiones o la muerte.

Caution Una Caution en la documentación señala un riesgo que podría resultar en averías al equipo.

No proseguir después de un símbolo de **WARNING** o Caution hasta no haber entendido las condiciones peligrosas y haber tomado las medidas apropiadas.

Este aparato se enmarca dentro de la clase I de seguridad y se encuentra protegido por una borna de puesta a tierra. Es preciso que exista una puesta a tierra continua desde la toma de alimentación eléctrica hasta las bornas de los cables de entrada del aparato, el cable de alimentación o el juego de cable de alimentación suministrado. Si existe la probabilidad de que la protección a tierra haya sufrido desperfectos, desenchufar el cable de alimentación hasta haberse subsanado el problema.

Puesta a tierra del cable de la red local (LAN):

- Si la LAN abarca un área cuyo suministro eléctrico proviene de más de una red de distribución de electricidad, cerciorarse de que las puestas a tierra estén conectadas entre sí de modo seguro.
- Es posible que los cables de la LAN se vean sometidos de vez en cuando a voltajes momentáneos que entrañen peligro (rayos o alteraciones en la red de energía eléctrica). Manejar con precaución los componentes de metal de la LAN que estén al descubierto.

Este aparato no contiene pieza alguna susceptible de reparación por parte del usuario. Todas las reparaciones, ajustes o servicio de mantenimiento debe realizarlos solamente el técnico.

Este producto no tiene interruptor de potencia; se activa cuando se enchufa el cable de alimentación.

Safety Information (Japan)

安全性の考慮

安全記号

⚠ マニュアル参照記号。製品にこの記号がついている場合はマニュアルを参照し、注意事項等をご確認ください。

WARNING　マニュアル中の「WARNING」は人身事故の原因となる危険を示します。

CAUTION　マニュアル中の「CAUTION」は装置破損の原因となる危険を示します。

「WARNING」や「CAUTION」の項は飛ばさないで必ずお読みください。危険性に関する記載事項をよく読み、正しい手順に従った上で次の事項に進んでください。

これは安全性クラスIの製品で保護用接地端子を備えています。主電源から製品の入力配線端子、電源コード、または添付の電源コード・セットまでの間、切れ目のない安全接地が存在することが必要です。もしこの保護回路が損なわれたことが推測されるときは、接地が修復されるまで電源コードを外しておいてください。

LAN ケーブルの接地に関して:

- もし貴社の LAN が複数の配電システムにより電力を受けている領域をカバーしている場合には、それらのシステムの安全接地が確実に相互に結合されていることを確認してください。
- LAN ケーブルは時として危険な過度電圧（例えば雷や、配電設備の電力網での障害）にさらされることがあります。露出した金属部分の取扱いには十分な注意をはらってください。

本製品の内部にはユーザーが修理できる部品はありません。サービス、調整、保守および修理はサービス訓練を受けた専門家におまかせください。

本製品には電源スイッチがありません。電源コードを接続したとき電源入となります。

Japan Power Cord Warning

製品には、同梱された電源コードをお使い下さい。
同梱された電源コードは、他の製品では使用出来ません。

Safety Information (China)

HP 网络产品使用安全手册

使用须知

欢迎使用惠普网络产品，为了您及仪器的安全，请您务必注意如下事项:

1. 仪器要和地线相接，要使用有正确接地插头的电源线，使用中国国家规定的220V电源。
2. 避免高温和尘土多的地方，否则易引起仪器内部部件的损坏。
3. 避免接近高温，避免接近直接热源，如直射太阳光、暖气等其它发热体。
4. 不要有异物或液体落入机内，以免部件短路。
5. 不要将磁体放置于仪器附近。

警告

为防止火灾或触电事故，请不要将该机放置于淋雨或潮湿处。

安 装

安装辅助管理模块，请参看安装指南。

保修及技术支持

如果您按照以上步骤操作时遇到了困难，或想了解其它产品性能，请按以下方式与我们联络。

如是硬件故障:

1. 与售出单位或当地维修机构联系。
2. 中国惠普有限公司维修中心地址:
   北京市海淀区知春路49号希格玛大厦
   联系电话: 010-62623888 转 6101
   邮政编码: 100080

如是软件问题:

1. 惠普用户响应中心热线电话: 010-65645959
2. 传真自动回复系统: 010-65645735

EMC Regulatory Statements

U.S.A.

FCC Class A

This equipment has been tested and found to comply with the limits for a Class A digital device, pursuant to Part 15 of the FCC Rules. These limits are designed to provide reasonable protection against interference when the equipment is operated in a commercial environment. This equipment generates, uses, and can radiate radio frequency energy and, if not installed and used in accordance with the instruction manual, may cause interference to radio communications. Operation of this equipment in a residential area may cause interference in which case the user will be required to correct the interference at his own expense.

Canada

This product complies with Class A Canadian EMC requirements.

Australia/New Zealand

This product complies with Australia/New Zealand EMC Class A requirements.

Japan

VCCI Class A

この装置は、情報処理装置等電波障害自主規制協議会（ＶＣＣＩ）の基準に基づくクラスＡ情報技術装置です。この装置を家庭環境で使用すると電波妨害を引き起こすことがあります。この場合には使用者が適切な対策を講ずるよう要求されることがあります。

Korea

사용자 안내문 : A 급기기

이기기는 업무용으로 전자파 적합등록을 받은 기기이오니, 판매자 또는 사용자는 이점을 주의하시기 바라며, 만약 잘못 구입하셨을 때에는 구입한 곳에서 비업무용으로 교환하시기 바랍니다.

Taiwan

警告使用者：這是甲類的資訊產品，在居住的環境中使用時，可能會造成射頻干擾，在這種情況下，使用者會被要求採取某些適當的對策。

European Community

DECLARATION OF CONFORMITY

according to ISO/IEC Guide 22 and EN 45014

Manufacturer's Name: Hewlett-Packard Company

Manufacturer's Address: 8000 Foothills Blvd.
Roseville, CA 95747-5502
U.S.A.

declares, that the product

Product Name: HP ProCurve Switch 3400cl-24G
HP ProCurve Switch 3400cl-48G

Product Number(s): J4905A, J4906A

Regulatory Model: RSVLC-0404, RSVLC-0405

Product Options/Accessories: J8434A, J8435A, J8436A, J8437A, J8439A, J8440A
J8436A, J8439A

conforms to the following Product Specifications:

Safety: EN 60950:2000 / IEC 60950:1999

EMC: EN 55022:1998 + A1:2000 + A2:2002/ CISPR 22:1997 + A1:2000 + A2:2002 Class A
EN 55024:1998 + A1:2001 / CISPR 24:1997 + A1:2001 + A2:2002
EN 61000-3-2:2000 / IEC 61000-3-2:2000 + A1:2001
EN 61000-3-3:1995 +A1:2001 / IEC 61000-3-3:2002

Supplementary Information:

The product herewith complies with the requirements of the Low Voltage Directive 73/23/EEC and the EMC Directive 89/336/EEC and carries the CE marking accordingly.

This product is assigned a Regulatory Model Number which stays with the regulatory aspects of the design. The Regulatory Model Number is the main product identifier in the regulatory documentation and test reports. This number should not be confused with the product marketing name or product numbers.

Roseville, 5 January 2005

Mike Avery, Regulatory Engineering Mgr

European Contact: Your local Hewlett-Packard Sales and Service Office or Hewlett-Packard GmbH, Department HQ-TRE, Herrenberger Straße 140, D-71034 Böblingen (FAX: + 49-7031-14-3143)

Recycle Statements

Waste Electrical and Electronic Equipment (WEEE) Statements

Disposal of Waste Equipment by Users in Private Household in the European Union

This symbol on the product or on its packaging indicates that this product must not be disposed of with your other household waste. Instead, it is your responsibility to dispose of your waste equipment by handing it over to a designated collection point for the recycling of waste electrical and electronic equipment. The separate collection and recycling of your waste equipment at the time of disposal will help to conserve natural resources and ensure that it is recycled in a manner that protects human health and the environment. For more information about where you can drop off your waste equipment for recycling, please contact your local city office, your household waste disposal service or the shop where you purchased the product.

Likvidace zařízení soukromými domácími uživateli v Evropské unii

Tento symbol na produktu nebo balení označuje výrobek, který nesmí být vyhozen spolu s ostatním domácím odpadem. Povinností uživatele je předat takto označený odpad na předem určené sběrné místo pro recyklaci elektrických a elektronických zařízení. Okamžité třídění a recyklace odpadu pomůže uchovat přírodní prostředí a zajistí takový způsob recyklace, který ochrání zdraví a životní prostředí člověka. Další informace o možnostech odevzdání odpadu k recyklaci získáte na příslušném obecním nebo městském úřadě, od firmy zabývající se sběrem a svozem odpadu nebo v obchodě, kde jste produkt zakoupili.

Bortskaffelse af affald fra husstande i den Europæiske Union

Hvis produktet eller dets emballage er forsynet med dette symbol, angiver det, at produktet ikke må bortskaffes med andet almindeligt husholdningsaffald. I stedet er det dit ansvar at bortskaffe kasseret udstyr ved at aflevere det på den kommunale genbrugsstation, der forestår genvinding af kasseret elektrisk og elektronisk udstyr. Den centrale modtagelse og genvinding af kasseret udstyr i forbindelse med bortskaffelsen bidrager til bevarelse af naturlige ressourcer og sikrer, at udstyret genvindes på en måde, der beskytter både mennesker og miljø. Yderligere oplysninger om, hvor du kan aflevere kasseret udstyr til genvinding, kan du få hos kommunen, den lokale genbrugsstation eller i den butik, hvor du købte produktet.

Seadmete jäätmete kõrvaldamine eramajapidamistes Euroopa Liidus

See tootel või selle pakendil olev sümbol näitab, et kõnealust toodet ei tohi koos teiste majapidamisjäätmetega kõrvaldada. Teie kohus on oma seadmete jäätmed kõrvaldada, viies need elektri- ja elektroonikaseadmete jäätmete ringlussevõtmiseks selleks ettenähtud kogumispunkti. Seadmete jäätmete eraldi kogumine ja ringlussevõtmine kõrvaldamise ajal aitab kaitsta loodusvarasid ning tagada, et ringlussevõtmine toimub viisil, mis kaitseb inimeste tervist ning keskkonda. Lisateabe saamiseks selle kohta, kuhu oma seadmete jäätmed ringlussevõtmiseks viia, võtke palun ühendust oma kohaliku linnakantselei, majapidamisjäätmete kõrvaldamise teenistuse või kauplusega, kust Te toote ostsite.

Laitteiden hävittäminen kotitalouksissa Euroopan unionin alueella

Jos tuotteessa tai sen pakkauksessa on tämä merkki, tuotetta ei saa hävittää kotitalousjätteiden mukana. Tällöin hävitettävä laite on toimitettava sähkölaitteiden ja elektronisten laitteiden kierrätyspisteeseen. Hävitettävien laitteiden erillinen käsittely ja kierrätys auttavat säästämään luonnonvaroja ja varmistamaan, että laite kierrätetään tavalla, joka estää terveyshaitat ja suojelee luontoa. Lisätietoja paikoista, joihin hävitettävät laitteet voi toimittaa kierrätettäväksi, saa ottamalla yhteyttä jätehuoltoon tai liikkeeseen, josta tuote on ostettu.

Élimination des appareils mis au rebut par les ménages dans l'Union européenne

Le symbole apposé sur ce produit ou sur son emballage indique que ce produit ne doit pas être jeté avec les déchets ménagers ordinaires. Il est de votre responsabilité de mettre au rebut vos appareils en les déposant dans les centres de collecte publique désignés pour le recyclage des équipements électriques et électroniques. La collecte et le recyclage de vos appareils mis au rebut indépendamment du reste des déchets contribue à la préservation des ressources naturelles et garantit que ces appareils seront recyclés dans le respect de la santé humaine et de l'environnement. Pour obtenir plus d'informations sur les centres de collecte et de recyclage des appareils mis au rebut, veuillez contacter les autorités locales de votre région, les services de collecte des ordures ménagères ou le magasin dans lequel vous avez acheté ce produit.

Entsorgung von Altgeräten aus privaten Haushalten in der EU

Das Symbol auf dem Produkt oder seiner Verpackung weist darauf hin, dass das Produkt nicht über den normalen Hausmüll entsorgt werden darf. Benutzer sind verpflichtet, die Altgeräte an einer Rücknahmestelle für Elektro- und Elektronik-Altgeräte abzugeben. Die getrennte Sammlung und ordnungsgemäße Entsorgung Ihrer Altgeräte trägt zur Erhaltung der natürlichen Ressourcen bei und garantiert eine Wiederverwertung, die die Gesundheit des Menschen und die Umwelt schützt. Informationen dazu, wo Sie Rücknahmestellen für Ihre Altgeräte finden, erhalten Sie bei Ihrer Stadtverwaltung, den örtlichen Müllentsorgungsbetrieben oder im Geschäft, in dem Sie das Gerät erworben haben

Απόρριψη άχρηστου εξοπλισμού από χρήστες σε ιδιωτικά νοικοκυριά στην Ευρωπαϊκή Ένωση

Το σύμβολο αυτό στο προϊόν ή τη συσκευασία του υποδεικνύει ότι το συγκεκριμένο προϊόν δεν πρέπει να διατίθεται μαζί με τα άλλα οικιακά σας απορρίμματα. Αντίθετα, είναι δική σας ευθύνη να απορρίψετε τον άχρηστο εξοπλισμό σας παραδίδοντάς τον σε καθορισμένο σημείο συλλογής για την ανακύκλωση άχρηστου ηλεκτρικού και ηλεκτρονικού εξοπλισμού. Η ξεχωριστή συλλογή και ανακύκλωση του άχρηστου εξοπλισμού σας κατά την απόρριψη θα συμβάλει στη διατήρηση των φυσικών πόρων και θα διασφαλίσει ότι η ανακύκλωση γίνεται με τρόπο που προστατεύει την ανθρώπινη υγεία και το περιβάλλον. Για περισσότερες πληροφορίες σχετικά με το πού μπορείτε να παραδώσετε τον άχρηστο εξοπλισμό σας για ανακύκλωση, επικοινωνήστε με το αρμόδιο τοπικό γραφείο, την τοπική υπηρεσία διάθεσης οικιακών απορριμμάτων ή το κατάστημα όπου αγοράσατε το προϊόν.

Készülékek magánháztartásban történő selejtezése az Európai Unió területén

A készüléken, illetve a készülék csomagolásán látható azonos szimbólum annak jelzésére szolgál, hogy a készülék a selejtezés során az egyéb háztartási hulladéktól eltérő módon kezelendő. A vásárló a hulladékká vált készüléket köteles a kijelölt gyűjtőhelyre szállítani az elektromos és elektronikai készülékek újrahasznosítása céljából. A hulladékká vált készülékek selejtezéskori begyűjtése és újrahasznosítása hozzájárul a természeti erőforrások megőrzéséhez, valamint biztosítja a selejtezett termékek környezetre és emberi egészségre nézve biztonságos feldolgozását. A begyűjtés pontos helyéről bővebb tájékoztatást a lakhelye szerint illetékes önkormányzattól, az illetékes szemeteltakarító vállalattól, illetve a terméket elárusító helyen kaphat.

Smaltimento delle apparecchiature da parte di privati nel territorio dell'Unione Europea

Questo simbolo presente sul prodotto o sulla sua confezione indica che il prodotto non può essere smaltito insieme ai rifiuti domestici. È responsabilità dell'utente smaltire le apparecchiature consegnandole presso un punto di raccolta designato al riciclo e allo smaltimento di apparecchiature elettriche ed elettroniche. La raccolta differenziata e il corretto riciclo delle apparecchiature da smaltire permette di proteggere la salute degli individui e l'ecosistema. Per ulteriori informazioni relative ai punti di raccolta delle apparecchiature, contattare l'ente locale per lo smaltimento dei rifiuti, oppure il negozio presso il quale è stato acquistato il prodotto.

Nolietotu iekārtu iznīcināšanas noteikumi lietotājiem Eiropas Savienības privātajās mājsaimniecībās

Šāds simbols uz izstrādājuma vai uz tā iesaiņojuma norāda, ka šo izstrādājumu nedrīkst izmest kopā ar citiem sadzīves atkritumiem. Jūs atbildat par to, lai nolietotās iekārtas tiktu nodotas speciāli iekārtotos punktos, kas paredzēti izmantoto elektrisko un elektronisko iekārtu savākšanai otrreizējai pārstrādei. Atsevišķa nolietoto iekārtu savākšana un otrreizējā pārstrāde palīdzēs saglabāt dabas resursus un garantēs, ka šīs iekārtas tiks otrreizēji pārstrādātas tādā veidā, lai pasargātu vidi un cilvēku veselību. Lai uzzinātu, kur nolietotās iekārtas var izmest otrreizējai pārstrādei, jāvēršas savas dzīves vietas pašvaldībā, sadzīves atkritumu savākšanas dienestā vai veikalā, kurā izstrādājums tika nopirkts.

Vartotojų iš privačių namų ūkių įrangos atliekų šalinimas Europos Sąjungoje

Šis simbolis ant gaminio arba jo pakuotės rodo, kad šio gaminio šalinti kartu su kitomis namų ūkio atliekomis negalima. Šalintinas įrangos atliekas privalote pristatyti į specialią surinkimo vietą elektros ir elektroninės įrangos atliekoms perdirbti. Atskirai surenkamos ir perdirbamos šalintinos įrangos atliekos padės saugoti gamtinius išteklius ir užtikrinti, kad jos bus perdirbtos tokiu būdu, kuris nekenkia žmonių sveikatai ir aplinkai. Jeigu norite sužinoti daugiau apie tai, kur galima pristatyti perdirbtinas įrangos atliekas, kreipkitės į savo seniūniją, namų ūkio atliekų šalinimo tarnybą arba parduotuvę, kurioje įsigijote gaminį.

Verwijdering van afgedankte apparatuur door privé-gebruikers in de Europese Unie

Dit symbool op het product of de verpakking geeft aan dat dit product niet mag worden gedeponeerd bij het normale huishoudelijke afval. U bent zelf verantwoordelijk voor het inleveren van uw afgedankte apparatuur bij een inzamelingspunt voor het recyclen van oude elektrische en elektronische apparatuur. Door uw oude apparatuur apart aan te bieden en te recyclen, kunnen natuurlijke bronnen worden behouden en kan het materiaal worden hergebruikt op een manier waarmee de volksgezondheid en het milieu worden beschermd. Neem contact op met uw gemeente, het afvalinzamelingsbedrijf of de winkel waar u het product hebt gekocht voor meer informatie over inzamelingspunten waar u oude apparatuur kunt aanbieden voor recycling.

Pozbywanie się zużytego sprzętu przez użytkowników w prywatnych gospodarstwach domowych w Unii Europejskiej

Ten symbol na produkcie lub jego opakowaniu oznacza, że produktu nie wolno wyrzucać do zwykłych pojemników na śmieci. Obowiązkiem użytkownika jest przekazanie zużytego sprzętu do wyznaczonego punktu zbiórki w celu recyklingu odpadów powstałych ze sprzętu elektrycznego i elektronicznego. Osobna zbiórka oraz recykling zużytego sprzętu pomogą w ochronie zasobów naturalnych i zapewnią ponowne wprowadzenie go do obiegu w sposób chroniący zdrowie człowieka i środowisko. Aby uzyskać więcej informacji o tym, gdzie można przekazać zużyty sprzęt do recyklingu, należy się skontaktować z urzędem miasta, zakładem gospodarki odpadami lub sklepem, w którym zakupiono produkt.

Descarte de Lixo Elétrico na Comunidade Européia

Este símbolo encontrado no produto ou na embalagem indica que o produto não deve ser descartado no lixo doméstico comum. É responsabilidade do cliente descartar o material usado (lixo elétrico), encaminhando-o para um ponto de coleta para reciclagem. A coleta e a reciclagem seletivas desse tipo de lixo ajudarão a conservar as reservas naturais; sendo assim, a reciclagem será feita de uma forma segura, protegendo o ambiente e a saúde das pessoas. Para obter mais informações sobre locais que reciclam esse tipo de material, entre em contato com o escritório da HP em sua cidade, com o serviço de coleta de lixo ou com a loja em que o produto foi adquirido.

Likvidácia vyradených zariadení v domácnostiach v Európskej únii

Symbol na výrobku alebo jeho balení označuje, že daný výrobok sa nesmie likvidovať s domovým odpadom. Povinnosťou spotrebiteľa je odovzdať vyradené zariadenie v zbernom mieste, ktoré je určené na recykláciu vyradených elektrických a elektronických zariadení. Separovaný zber a recyklácia vyradených zariadení prispieva k ochrane prírodných zdrojov a zabezpečuje, že recyklácia sa vykonáva spôsobom chrániacim ľudské zdravie a životné prostredie. Informácie o zberných miestach na recykláciu vyradených zariadení vám poskytne miestne zastupiteľstvo, spoločnosť zabezpečujúca odvoz domového odpadu alebo obchod, v ktorom ste si výrobok zakúpili.

Odstranjevanje odslužene opreme uporabnikov v zasebnih gospodinjstvih v Evropski uniji

Ta znak na izdelku ali njegovi embalaži pomeni, da izdelka ne smete odvreči med gospodinjske odpadke. Nasprotno, odsluženo opremo morate predati na zbirališče, pooblaščeno za recikliranje odslužene električne in elektronske opreme. Ločeno zbiranje in recikliranje odslužene opreme prispeva k ohranjanju naravnih virov in zagotavlja recikliranje te opreme na zdravju in okolju neškodljiv način. Za podrobnejše informacije o tem, kam lahko odpeljete odsluženo opremo na recikliranje, se obrnite na pristojni organ, komunalno službo ali trgovino, kjer ste izdelek kupili.

Eliminación de residuos de equipos eléctricos y electrónicos por parte de usuarios particulares en la Unión Europea

Este símbolo en el producto o en su envase indica que no debe eliminarse junto con los desperdicios generales de la casa. Es responsabilidad del usuario eliminar los residuos de este tipo depositándolos en un "punto limpio" para el reciclado de residuos eléctricos y electrónicos. La recogida y el reciclado selectivos de los residuos de aparatos eléctricos en el momento de su eliminación contribuirá a conservar los recursos naturales y a garantizar el reciclado de estos residuos de forma que se proteja el medio ambiente y la salud. Para obtener más información sobre los puntos de recogida de residuos eléctricos y electrónicos para reciclado, póngase en contacto con su ayuntamiento, con el servicio de eliminación de residuos domésticos o con el establecimiento en el que adquirió el producto.

Bortskaffande av avfallsprodukter från användare i privathushåll inom Europeiska Unionen

Om den här symbolen visas på produkten eller förpackningen betyder det att produkten inte får slängas på samma ställe som hushållssopor. I stället är det ditt ansvar att bortskaffa avfallet genom att överlämna det till ett uppsamlingsställe avsett för återvinning av avfall från elektriska och elektroniska produkter. Separat insamling och återvinning av avfallet hjälper till att spara på våra naturresurser och gör att avfallet återvinns på ett sätt som skyddar människors hälsa och miljön. Kontakta ditt lokala kommunkontor, din närmsta återvinningsstation för hushållsavfall eller affären där du köpte produkten för att få mer information om var du kan lämna ditt avfall för återvinning.

Index

Numerics

10/100Base-TX ports
    location on switch … 1-3
1000Base-LH
    connections, length limitations … 2-6
    ports, cables used with … 2-6, B-2
1000Base-LX
    connections, length limitations … 2-6
    ports, cables used with … 2-6, B-2
1000Base-SX
    connections, length limitations … 2-6
    ports, cables used with … 2-6, B-2
1000Base-T
    connections, length limitations … 2-5
    ports, cables used with … 2-5

A

AC power connector
    location on back of switch … 1-10
Act LED … 1-5, 1-8–1-9
auto MDI/MDI-X operation … B-7, B-9
    HP Auto-MDIX feature … B-5

B

back of switch
    description … 1-10
    power connector … 1-10
backbone switch
    topology with … 2-29
basic switch configuration
    IP address … 3-3
    manager password … 3-2
    subnet mask … 3-3
    Switch Setup screen … 3-2
basic troubleshooting tips … 4-1
blinking LEDs
    error indications … 4-4
Bootp
    automatic switch configuration … 3-2
    for in-band access … 2-24
buttons
    Clear button … 1-8
    Port LED View select button … 1-7
    Reset button … 1-8

C

cabinet
    mounting the switch in … 2-13
cables
    1000Base-LH
        connections … 2-6
        fiber-optic cable specifications … B-2
    1000Base-LX
        connections … 2-6
        fiber-optic cable specifications … B-2
    1000Base-SX
        connections … 2-6
        fiber-optic cable specifications … B-2
    1000Base-T connections … 2-5
    connecting cables to switch ports … 2-20
    effects of non-standard cables … 4-2
    fiber-optic, specifications … B-2
    infrastructure requirements … 2-5
    length limitations … 2-5
    required types … 2-5
    serial, for direct console connection … 2-25
cables, twisted pair
    category 3, 4, 5 … B-5
    cross-over cable pin-out … B-8
    MDI-X to MDI connections … B-7, B-9
    MDI-X to MDI-X connections … B-8
    pin-outs … B-7, B-9
    straight-through cable pin-out … B-7, B-9
    switch-to-computer connection … B-7, B-9
    switch-to-switch or hub connection … B-8
cables, twisted-pair
    HP Auto-MDIX feature … B-5
    wiring rules … B-5
cables, twisted-pair connector pin-outs … B-5
cabling infrastructure … 2-5
cl module
    install or remove … 2-7

Clear button
deleting passwords … 1-8
description … 1-8
location on switch … 1-3, 1-8
restoring factory default configuration … 1-8, 4-11
to delete password protection … 3-4
CLI prompt, console
displaying … 2-25
configuration
checking when troubleshooting … 4-3
DHCP/Bootp … 3-2
full duplex only for mini-GBICs … 2-9
IP address … 3-3
IP address, manually … 3-2
manager password … 3-2
restoring factory defaults … 1-8, 4-11
subnet mask … 3-3
Switch Setup screen … 3-2
connecting the switch to a power source … 2-19
connecting the switch to an RPS/EPS … 2-23
connector specifications … A-2
console
checking messages during troubleshooting … 4-9
displaying the CLI prompt … 2-25
features … 2-24
how to connect in-band … 2-24
how to connect out-of-band … 2-24
serial cable connection … 2-25
Switch Setup screen … 3-2
Telnet access … 3-5
terminal configuration … 2-24
console port
location on switch … 1-3
cross-over cable
pin-out … B-8

D

deleting passwords … 1-8
description
back of switch … 1-10
front of switch … 1-3
LEDs … 1-5
switch … 1-1
desktop switch
sample topology … 2-26
DHCP
automatic switch configuration … 3-2
for in-band access … 2-24
diagnostic tests … 4-9
checking the console messages … 4-9
checking the LEDs … 4-9
end-to-end connectivity … 4-10
testing the switch only … 4-9
testing twisted-pair cabling … 4-10
downloading new switch software … 4-12
dual-personality ports
LEDs … 1-6
location on switch … 1-4
operation description … 1-4

E

electrical specifications, switch … A-1
EMC regulatory statements … C-8
environmental specifications, switch … A-1

F

factory default configuration, restoring … 1-8, 4-11
Fan Status LED … 1-6
Fault LED … 1-5
behavior during self test … 2-13
behaviors … 1-5
blinking definition … 1-6, 1-9
location on switch … 1-3
showing error conditions … 4-4
FDx LED … 1-5, 1-8
features
console … 2-24
switch … 1-11
fiber-optic cables … B-2
1000Base-LH … B-2
1000Base-LX … B-2
1000Base-SX … B-2
front of switch … 1-3
10/100Base-TX ports … 1-3
Clear button … 1-8
description … 1-3
dual-personality ports … 1-4
LEDs … 1-5
network ports … 1-4
Port LED View select button and LEDs … 1-7
Reset button … 1-8

full-duplex fixed configuration
effects on network connections … 4-1
full-duplex operation of mini-GBICs … 2-9

H

horizontal surface
mounting switch on … 2-19
HP Auto-MDIX
feature description … B-5

I

in-band … 3-1
in-band console access
types of … 2-24
included parts … 2-1
installation
cl module … 2-7
connecting the switch to a power source … 2-19
horizontal surface mounting … 2-19
location considerations … 2-6
network cable requirements … 2-5
precautions … 2-4
rack or cabinet mounting … 2-13
site preparation … 2-5
summary of steps … 2-3
transceiver … 2-8
IP address
configuring … 3-3

L

LEDs
Act … 1-5, 1-8–1-9
behavior during self test … 2-12
blinking definition … 1-6, 1-9
checking during troubleshooting … 4-9
descriptions of … 1-5
dual-personality ports … 1-6
EPS/RPS … 2-22
error indications … 4-4
Fan Status … 1-6
Fault … 1-5
behavior during self test … 2-13
showing error conditions … 4-4
FDx … 1-5, 1-8
Link … 1-5, 1-9
location on switch … 1-3
on switch … 1-5
port
description … 1-5
Port LED View select indicators … 1-5
Port View
selecting the display … 1-7
Power … 1-5
behavior during self test … 2-13
Self Test … 1-5
behavior during self test … 2-12
T and M … 1-6
length limitations
1000Base-LH connections … 2-6
1000Base-LX connections … 2-6
1000Base-SX connections … 2-6
1000Base-T connections … 2-5
Link LEDs … 1-5, 1-9
link test … 4-10
location for the switch, considerations … 2-6

M

MDI-X to MDI network cable … B-7, B-9
MDI-X to MDI-X network cable … B-8
mini-GBICs
full-duplex operation … 2-9
slot, location on switch … 1-3
mounting the switch
in a rack or cabinet … 2-13
precautions … 2-4
on a horizontal surface … 2-19

N

network cables
1000Base-LH connections … 2-6
1000Base-LX connections … 2-6
1000Base-SX connections … 2-6
1000Base-T connections … 2-5
fiber-optic, specifications … B-2
HP Auto-MDIX feature … B-5
required types … 2-5
twisted-pair connector pin-outs … B-5
twisted-pair, wiring rules … B-5

network devices
connecting to the switch … 2-20
network ports
connecting to … 2-20
location on switch … 1-4
standards compliance … A-2
types of … 1-4, 2-5
non-standard network cables, effects … 4-2

O

out-of-band console access … 3-5

P

parts, included with the switch … 2-1
password
configuring … 3-2
passwords
deleting with the Clear button … 3-4
if you lose the password … 3-4
passwords, deleting … 1-8
physical specifications, switch … A-1
Ping test … 4-10
pin-outs
twisted-pair cables … B-5
port configuration
checking when troubleshooting … 4-3
Port LED View
indicator LEDs … 1-7
select button … 1-7
selecting the display … 1-7
port LEDs
description … 1-5
Link … 1-5, 1-9
normal operation … 2-13
T and M … 1-6
ports
10/100Base-TX, location on switch … 1-3
connecting to … 2-20
console … 2-24
HP Auto-MDIX feature … B-5
network connections … 2-20
power connector … 1-10
Power LED … 1-5
behavior during self test … 2-13
behaviors … 1-5
location on switch … 1-3
power source
connecting the switch to … 2-19
precautions
mounting the switch … 2-4
power requirements … 2-4
preparing the installation site … 2-5
Proactive Network tools
diagnostics with … 4-8

R

rack
mounting precautions … 2-4
mounting the switch in … 2-13
recycle statements … D-1
Redundant Power Supply … 2-21
regulatory statements … C-8
Reset button
description … 1-8
location on switch … 1-3, 1-8
restoring factory default configuration … 4-11
resetting the switch
factory default reset … 4-11
location of Reset button … 1-8
troubleshooting procedure … 4-9
RPS/EPS … 2-21
cables … 2-21
connecting to a switch … 2-23
operation … 2-23

S

safety and regulatory statements … C-1
safety specifications … A-2
segment switch
sample topology … 2-27
selecting the Port LED View display … 1-7
self test
Fault LED behavior … 2-13
LED behavior during … 2-12
Power LED behavior … 2-13
Self Test LED … 1-5
behavior during factory default reset … 4-11
serial cable
for direct console connection … 2-25
slots for mini-GBICs
location on switch … 1-3

specifications
connectors … A-2
electrical … A-1
environmental … A-1
physical … A-1
safety … A-2
straight-through cable
pin-out … B-7, B-9
subnet mask
configuring … 3-3
summary
of cables used with the switch … 2-5
of switch installation … 2-3
switch
connecting to a power source … 2-19
description … 1-1
downloading new software … 4-12
electrical specifications … A-1
environmental specifications … A-1
features … 1-11
front panel description … 1-3
included parts … 2-1
LED descriptions … 1-5
mounting in a rack or cabinet … 2-13
mounting on horizontal surface … 2-19
physical specifications … A-1
switch operation
verifying after installation … 2-11
Switch Setup screen … 3-2
configuring a subnet mask … 3-3
configuring an IP address … 3-3
field descriptions … 3-3

T

Telnet access to the console … 3-5
terminal configuration … 2-24
Test LED
behavior during self test … 2-12
testing
checking the console messages … 4-9
checking the LEDs … 4-9
diagnostic tests … 4-9
end-to-end communications … 4-10
link test … 4-10
Ping test … 4-10
switch operation … 4-9
switch-to-device communications … 4-10
twisted-pair cabling … 4-10
tips for troubleshooting … 4-1
topologies
effects of improper topology … 4-2
samples of … 2-26
transceiver
install or remove … 2-8
troubleshooting … 4-1
basic tips … 4-1
checking port configuration … 4-3
checking the console messages … 4-9
checking the LEDs … 4-9
common network problems … 4-1
connecting to fixed full-duplex devices … 4-1
diagnostic tests … 4-9
effects of improper topology … 4-2
effects of non-standard cables … 4-2
link test … 4-10
Ping test … 4-10
Proactive Network tools … 4-8
restoring factory default configuration … 4-11
testing connections to other devices … 4-10
testing end-to-end communications … 4-10
testing the switch … 4-9
testing the twisted-pair cables … 4-10
twisted-pair cable
cross-over cable pin-out … B-8
pin-outs … B-5, B-7, B-9
straight-through cable pin-out … B-7, B-9
switch-to-computer connection … B-7, B-9
switch-to-switch or hub connection … B-8
testing … 4-10
twisted-pair ports
HP Auto-MDIX feature … B-5

V

VT-100 terminal
    serial cable connection for … 2-25

W

wiring rules for twisted-pair cables … B-5

— This page is intentionally unused. —

— This page is intentionally unused. —

ProCurve Networking
HP Innovation

Technical information in this document
is subject to change without notice.

©Copyright 2004, 2006
Hewlett-Packard Development Company, L.P.
Reproduction, adaptation, or translation
without prior written permission is prohibited
except as allowed under the copyright laws.

Printed in Singapore
March 2006

Manual Part Number
5991-4702

ITEM 509

ProCurve Networking
HP Innovation

6400cl
5300xl
4200vl
3400cl

Management and Configuration Guide

ProCurve Switches

E.10.02 (Series 5300xl)
L.10.XX (Series 4200vl)
M.08.73 (Series 3400/6400cl)

www.procurve.com

hp invent

ProCurve

Series 6400cl Switches
Series 5300xl Switches
Series 4200vl Switches
Series 3400cl Switches

October 2006

E.10.02 or Greater (5300xl)
L.10.01 or Greater (4200vl)
M.08.73 or Greater (3400/6400cl)

Management and Configuration Guide

© Copyright 2006 Hewlett-Packard Development Company, L.P. The information contained herein is subject to change without notice. All Rights Reserved.

This document contains proprietary information, which is protected by copyright. No part of this document may be photocopied, reproduced, or translated into another language without the prior written consent of Hewlett-Packard.

Publication Number

5990-6050
October 2006

Applicable Products

ProCurve Switch 5308XL	(J4819A)
ProCurve Switch 5372XL	(J4848A)
ProCurve Switch 5348XL	(J4849A)
ProCurve Switch 5304XL	(J4850A)
ProCurve Switch 3400cl-24G	(J4905A)
ProCurve Switch 3400cl-48G	(J4906A)
ProCurve Switch 4204vl	(J8770A)
ProCurve Switch 4208vl	(J8773A)
ProCurve Switch 4202vl-72	(J8772A)
ProCurve Switch 4202vl-48G	(J8771A)
ProCurve Switch 10G CX4 6400cl-6XG	(J8433A)
ProCurve Switch 10G X2 6400cl-6XG	(J8474A)

Trademark Credits

Microsoft, Windows, Windows 95, and Microsoft Windows NT are US registered trademarks of Microsoft Corporation. Internet Explorer is a trademark of Microsoft Corporation. Ethernet is a registered trademark of Xerox Corporation. Netscape is a registered trademark of Netscape Corporation. Cisco® is a trademark of Cisco Systems, Inc.

Disclaimer

The information contained in this document is subject to change without notice.

HEWLETT-PACKARD COMPANY MAKES NO WARRANTY OF ANY KIND WITH REGARD TO THIS MATERIAL, INCLUDING, BUT NOT LIMITED TO, THE IMPLIED WARRANTIES OF MERCHANTABILITY AND FITNESS FOR A PARTICULAR PURPOSE. Hewlett-Packard shall not be liable for errors contained herein or for incidental or consequential damages in connection with the furnishing, performance, or use of this material.

The only warranties for HP products and services are set forth in the express warranty statements accompanying such products and services. Nothing herein should be construed as constituting an additional warranty. HP shall not be liable for technical or editorial errors or omissions contained herein.

Hewlett-Packard assumes no responsibility for the use or reliability of its software on equipment that is not furnished by Hewlett-Packard.

Warranty

See the Customer Support/Warranty booklet included with the product.

A copy of the specific warranty terms applicable to your Hewlett-Packard products and replacement parts can be obtained from your HP Sales and Service Office or authorized dealer.

Hewlett-Packard Company
8000 Foothills Boulevard, m/s 5551
Roseville, California 95747-5551
http://www.procurve.com

Contents

Product Documentation

About Your Switch Manual Set xix

Feature Index xx

1 Getting Started

Contents 1-1

Introduction 1-2

Conventions 1-2

Feature Descriptions by Model 1-2

Command Syntax Statements 1-3

Command Prompts 1-3

Screen Simulations 1-4

Port Identity Examples 1-4

Keys 1-4

Sources for More Information 1-4

Getting Documentation From the Web 1-6

Online Help 1-7

Need Only a Quick Start? 1-8

IP Addressing 1-8

To Set Up and Install the Switch in Your Network 1-9

2 Selecting a Management Interface

Contents 2-1

Overview 2-2

Understanding Management Interfaces 2-2

Advantages of Using the Menu Interface 2-3

Advantages of Using the CLI 2-4
General Benefits 2-4
Information on Using the CLI 2-5
Advantages of Using the Web Browser Interface 2-5
Advantages of Using ProCurve Manager or ProCurve Manager Plus 2-7

3 Using the Menu Interface

Contents 3-1
Overview 3-2
Starting and Ending a Menu Session 3-3
How To Start a Menu Interface Session 3-4
How To End a Menu Session and Exit from the Console 3-5
Main Menu Features 3-7
Screen Structure and Navigation 3-9
Rebooting the Switch 3-12
Menu Features List 3-14
Where To Go From Here 3-15

4 Using the Command Line Interface (CLI)

Contents 4-1
Overview 4-2
Accessing the CLI 4-2
Using the CLI 4-2
Privilege Levels at Logon 4-3
Privilege Level Operation 4-4
Operator Privileges 4-4
Manager Privileges 4-5
How To Move Between Levels 4-7
Listing Commands and Command Options 4-8
Listing Commands Available at Any Privilege Level 4-8
Listing Command Options 4-10

Displaying CLI "Help" 4-11
Configuration Commands and the Context Configuration Modes . . 4-12
Configuring Custom Login Banners for the Console and Web Browser Interfaces 4-15
Banner Operation with Telnet, Serial, or SSHv2 Access 4-16
Banner Operation with Web Browser Access 4-16
Configuring and Displaying a Non-Default Banner 4-16
Example of Configuring and Displaying a Banner 4-17
Operating Notes 4-19
CLI Control and Editing 4-21

5 Using the Web Browser Interface

Contents 5-1
Overview 5-2
General Features 5-3
Starting an Web Browser Interface Session with the Switch 5-4
Using a Standalone Web Browser in a PC or UNIX Workstation 5-4
Using ProCurve Manager (PCM) or ProCurve Manager Plus (PCM+) 5-5
Tasks for Your First Web Browser Interface Session 5-7
Viewing the "First Time Install" Window 5-7
Security: Creating Usernames and Passwords in the Browser Interface 5-8
Entering a User Name and Password 5-10
Using a User Name 5-10
If You Lose the Password 5-10
Online Help for the Web Browser Interface 5-11
Support/Mgmt URLs Feature 5-12
Support URL 5-13
Help and the Management Server URL 5-13
Using the PCM Server for Switch Web Help 5-14
Status Reporting Features 5-16
The Overview Window 5-16
The Port Utilization and Status Displays 5-17

Port Utilization 5-17
Port Status 5-19
The Alert Log 5-20
Sorting the Alert Log Entries 5-20
Alert Types and Detailed Views 5-21
The Status Bar 5-22
Setting Fault Detection Policy 5-24

6 Switch Memory and Configuration

Contents 6-1

Overview 6-3

Overview of Configuration File Management 6-3

Using the CLI To Implement Configuration Changes 6-6

Using the Menu and Web Browser Interfaces To Implement Configuration Changes 6-9
Menu: Implementing Configuration Changes 6-9
Using Save and Cancel in the Menu Interface 6-10
Rebooting from the Menu Interface 6-11
Web: Implementing Configuration Changes 6-12

Using Primary and Secondary Flash Image Options 6-13
Displaying the Current Flash Image Data 6-13
Switch Software Downloads 6-15
Local Switch Software Replacement and Removal 6-16
Rebooting the Switch 6-18
Operating Notes 6-21

Multiple Configuration Files on 5300xl and 4200vl Switches 6-22
General Operation 6-24
Transitioning to Multiple Configuration Files 6-26
Listing and Displaying Startup-Config Files 6-27
Viewing the Startup-Config File Status with Multiple Configuration Enabled 6-27
Displaying the Content of A Specific Startup-Config File 6-29
Changing or Overriding the Reboot Configuration Policy 6-29
Managing Startup-Config Files in the Switch 6-31

Renaming an Existing Startup-Config File 6-32
Creating a New Startup-Config File 6-32
Erasing a Startup-Config File 6-34
Using the Clear + Reset Button Combination To Reset the Switch to Its Default Configuration 6-35
Transferring Startup-Config Files To or From a Remote Server 6-37
TFTP: Copying a Configuration File to a Remote Host 6-37
TFTP: Copying a Configuration File from a Remote Host 6-37
Xmodem: Copying a Configuration File to a Serially Connected Host 6-38
Xmodem: Copying a Configuration from a Serially Connected Host 6-38
Operating Notes for Multiple Configuration Files 6-39

7 Interface Access and System Information

Contents 7-1
Overview 7-2
Interface Access: Console/Serial Link, Web, and Inbound Telnet . 7-3
Menu: Modifying the Interface Access 7-4
CLI: Modifying the Interface Access 7-5
Denying Interface Access by Terminating Remote Management Sessions 7-8
System Information 7-9
Menu: Viewing and Configuring System Information 7-10
CLI: Viewing and Configuring System Information 7-11
Web: Configuring System Parameters 7-14

8 Configuring IP Addressing

Contents 8-1
Overview 8-2
IP Configuration 8-2
Just Want a Quick Start with IP Addressing? 8-3
IP Addressing with Multiple VLANs 8-4
Menu: Configuring IP Address, Gateway, and Time-To-Live (TTL) . . 8-5

CLI: Configuring IP Address, Gateway, and Time-To-Live (TTL) 8-6
Web: Configuring IP Addressing 8-10
How IP Addressing Affects Switch Operation 8-11
DHCP/Bootp Operation 8-12
Network Preparations for Configuring DHCP/Bootp 8-14

IP Preserve: Retaining VLAN-1 IP Addressing Across Configuration File Downloads 8-15
Operating Rules for IP Preserve 8-16
Enabling IP Preserve 8-16

9 Time Protocols

Contents 9-1

Overview 9-2
TimeP Time Synchronization 9-2
SNTP Time Synchronization 9-3

Selecting a Time Synchronization Protocol or Turning Off Time Protocol Operation 9-3
General Steps for Running a Time Protocol on the Switch: 9-3
Disabling Time Synchronization 9-4

SNTP: Viewing, Selecting, and Configuring 9-5
Menu: Viewing and Configuring SNTP 9-6
CLI: Viewing and Configuring SNTP 9-8
Viewing the Current SNTP Configuration 9-9
Configuring (Enabling or Disabling) the SNTP Mode 9-10

TimeP: Viewing, Selecting, and Configuring 9-16
Menu: Viewing and Configuring TimeP 9-17
CLI: Viewing and Configuring TimeP 9-18
Viewing the Current TimeP Configuration 9-19
Configuring (Enabling or Disabling) the TimeP Mode 9-20

SNTP Unicast Time Polling with Multiple SNTP Servers 9-25
Address Prioritization 9-25
Displaying All SNTP Server Addresses Configured on the Switch . . 9-26
Adding and Deleting SNTP Server Addresses 9-26

Menu: Operation with Multiple SNTP Server Addresses Configured 9-28

SNTP Messages in the Event Log 9-28

10 Port Status and Basic Configuration

Contents 10-1

Overview 10-2

Viewing Port Status and Configuring Port Parameters 10-2

Menu: Port Configuration 10-6

CLI: Viewing Port Status and Configuring Port Parameters 10-8

Using the CLI To Enable or Disable Ports and Configure Port Mode 10-9

Enabling or Disabling Flow Control 10-11

Configuring a Broadcast Limit on the Switch 10-14

Configuring Auto-MDIX 10-15

Web: Viewing Port Status and Configuring Port Parameters 10-18

Using Friendly (Optional) Port Names 10-18

Configuring and Operating Rules for Friendly Port Names 10-19

Configuring Friendly Port Names 10-19

Displaying Friendly Port Names with Other Port Data 10-21

11 Power Over Ethernet (PoE) Operation for the Series 5300xl Switches

Contents 11-1

PoE Operation on the Series 5300xl Switches 11-2

Introduction 11-2

PoE Terminology 11-3

Overview of Operation 11-4

Related Publications 11-4

General PoE Operation 11-5

Configuration Options 11-5

PD Support 11-6

Power Priority Operation 11-8

Configuring PoE Operation 11-10
Changing the PoE Port Priority Level 11-10
Disabling or Re-Enabling PoE Port Operation 11-11
Changing the Threshold for Generating a Power Notice 11-11
Configuring Optional PoE Port Identifiers 11-12
Viewing PoE Configuration and Status 11-15
Displaying the Switch's Global PoE Power Status 11-15
Displaying an Overview of PoE Status on All Ports 11-16
Displaying the PoE Status on Specific Ports 11-17
Planning and Implementing a PoE Configuration 11-19
Assigning PoE Ports to VLANs 11-19
Applying Security Features to PoE Configurations 11-20
Assigning Priority Policies to PoE Traffic 11-20
Calculating the Maximum Load for an xl PoE Module 11-21
PoE Operating Notes 11-23
PoE Event Log Messages 11-23
"Informational" PoE Event-Log Messages 11-23
"Warning" PoE Event-Log Messages 11-25

12 Access Controller xl Module for the Series 5300xl Switches

Contents 12-1
Introduction 12-3
General Operation 12-3
Related Publications 12-3
Terminology 12-4
Access Controller xl Module Overview 12-5
Module Operation 12-5
Using 5300xl Features with the Access Controller xl Module . . . 12-7
Routing Infrastructure Support 12-10
Using 5300xl Switch Network Address Translation with the ACM 12-11
The Role of VLANs 12-12
Client VLANs 12-12
Static VLAN Features Supported on Client VLANs 12-13

General Operating Rules 12-14
Configuring the ACM on the Network 12-14
Configuring the Access Controller xl Module 12-16
Configuring Downlink Client Ports 12-16
Changing the VLAN-Base 12-18
Configuring Client VLANs 12-19
Configuring Uplink Network Ports 12-19
Configuring the Uplink VLAN 12-19
ACM Configuration Commands Summary and Syntax 12-20
Configuration Context Command Syntax 12-20
Access Controller Context Command Syntax 12-22
Displaying Access Controller xl Status from the 5300xl CLI . . . 12-24
ACM Display Commands Summary and Syntax 12-24
Configuration Context Command Syntax 12-25
Access Controller Context Command Syntax 12-26
Managing the ACM 12-27
Using the ACM's Extended CLI 12-27
Downloading New Software to the Module 12-30
Resetting the Module to Factory Defaults 12-30
Operating Notes 12-31
BIOS POST Event Log Messages 12-32

13 Port Trunking

Contents 13-1
Overview 13-2
Port Trunk Features and Operation 13-4
Trunk Configuration Methods 13-5
Menu: Viewing and Configuring a Static Trunk Group 13-9
CLI: Viewing and Configuring Port Trunk Groups 13-11
Using the CLI To View Port Trunks 13-11
Using the CLI To Configure a Static or Dynamic Trunk Group . . . 13-14
Web: Viewing Existing Port Trunk Groups 13-17

Trunk Group Operation Using LACP 13-18
Default Port Operation 13-20
LACP Notes and Restrictions 13-21
Trunk Group Operation Using the "Trunk" Option 13-24
How the Switch Lists Trunk Data 13-25
Outbound Traffic Distribution Across Trunked Links 13-25

14 Port Traffic Controls

Contents 14-1
Overview 14-3
All-Traffic Rate-Limiting for the 5300xl, 3400cl and 6400cl Switches 14-4
Introduction 14-4
Rate-Limiting Operation 14-5
Configuring Inbound Rate-Limiting 14-5
Displaying the Current Rate-Limit Configuration 14-6
Operating Notes for Rate-Limiting 14-7
ICMP Rate-Limiting 14-10
Terminology 14-10
Effect of ICMP Rate-Limiting 14-10
Operating Notes for ICMP Rate-Limiting 14-17
Guaranteed Minimum Bandwidth (GMB) on the Series 5300xl Switches 14-21
Introduction 14-21
Terminology 14-21
GMB Operation 14-21
Configuring Guaranteed Minimum Bandwidth for Outbound Traffic 14-23
Displaying the Current Guaranteed Minimum Bandwidth Configuration 14-25
GMB Operating Notes 14-26
Jumbo Packets on the Series 3400cl and Series 6400cl Switches 14-27
Terminology 14-27
Operating Rules 14-28

Configuring Jumbo Packet Operation 14-29
Overview 14-29
Viewing the Current Jumbo Configuration 14-29
Enabling or Disabling Jumbo Traffic on a VLAN 14-31
Operating Notes for Jumbo Traffic-Handling 14-32
Troubleshooting 14-34

15 Configuring for Network Management Applications

Contents 15-1

Using SNMP Tools To Manage the Switch 15-3
Overview 15-3
SNMP Management Features 15-4
Configuring for SNMP Access to the Switch 15-4
Configuring for SNMP Version 3 Access to the Switch 15-5
SNMP Version 3 Commands 15-6
Enabling SNMPv3 15-7
SNMPv3 Users 15-7
Group Access Levels 15-10
SNMPv3 Communities 15-11
Menu: Viewing and Configuring non-SNMP version 3 Communities 15-13
CLI: Viewing and Configuring SNMP Community Names 15-14
SNMPv3 Notification and Traps 15-16
SNMPv1 and SNMPv2c Trap Features 15-19
CLI: Configuring and Displaying Trap Receivers 15-19
Using the CLI To Enable Authentication Traps 15-22
Advanced Management: RMON 15-22

LLDP (Link-Layer Discovery Protocol) 15-24
Terminology 15-25
General LLDP Operation 15-27
LLDP-MED 15-27
Packet Boundaries in a Network Topology 15-27
Configuration Options 15-28
Options for Reading LLDP Information Collected by the Switch . . 15-30
LLDP and LLDP-MED Standards Compatibility 15-31

LLDP Operating Rules 15-31
LLDP Data Management on the Series 3400cl and 6400cl Switches 15-32
LLDP Neighbor Data 15-32
Configuring LLDP Operation 15-33
Viewing the Current Configuration 15-34
Configuring Global LLDP Packet Controls 15-37
Configuring SNMP Notification Support 15-41
Changing the Minimum Interval for Successive Data Change Notifications for the Same Neighbor 15-42
Configuring Per-Port Transmit and Receive Modes 15-42
Configuring Basic LLDP Per-Port Advertisement Content 15-43
Configuring Support for Port Speed and Duplex Advertisements on the 5300xl and 4200vl Switches 15-46
LLDP-MED (Media-Endpoint-Discovery) for the 5300xl and 4200vl Switches 15-47
LLDP-MED Topology Change Notification 15-50
LLDP-MED Fast Start Control 15-51
Advertising Device Capability, Network Policy, PoE Status and Location Data 15-52
Configuring Location Data for LLDP-MED Devices 15-56
Displaying Advertisement Data 15-62
Displaying Switch Information Available for Outbound Advertisements 15-63
Displaying LLDP Statistics 15-68
LLDP Operating Notes 15-70
LLDP and CDP Data Management 15-72
LLDP and CDP Neighbor Data 15-72
CDP Operation and Commands 15-74

A File Transfers

Contents A-1
Overview A-3
Downloading Switch Software A-3
General Software Download Rules A-4
Using TFTP To Download Switch Software from a Server A-4

Menu: TFTP Download from a Server to Primary Flash A-5
CLI: TFTP Download from a Server to Flash A-6
Using Secure Copy and SFTP A-8
How It Works A-9
The SCP/SFTP Process A-10
Disable TFTP and Auto-TFTP for Enhanced Security A-10
Command Options A-13
Authentication A-14
SCP/SFTP Operating Notes A-14
Using Xmodem to Download Switch Software From a PC or UNIX Workstation A-16
Menu: Xmodem Download to Primary Flash A-16
CLI: Xmodem Download from a PC or UNIX Workstation to Primary or Secondary Flash A-17
Switch-to-Switch Download A-18
Menu: Switch-to-Switch Download to Primary Flash A-18
CLI: Switch-To-Switch Downloads A-19
Using PCM+ to Update Switch Software A-21
Troubleshooting TFTP Downloads A-21
Transferring Switch Configurations and ACL Command Files .. A-23
TFTP: Copying a Configuration from a Remote Host A-23
TFTP: Copying a Configuration File to a Remote Host A-24
TFTP: Uploading an ACL Command File from a TFTP Server A-24
Xmodem: Copying a Configuration File from the Switch to a Serially Connected PC or UNIX Workstation A-27
Xmodem: Copying a Configuration File from a Serially Connected PC or UNIX Workstation A-27
Copying Diagnostic Data to a Remote Host, PC, or UNIX Workstation A-29
Copying Command Output to a Destination Device A-29
Copying Event Log Output to a Destination Device A-30
Copying Crash Data Content to a Destination Device A-30
Copying Crash Log Data Content to a Destination Device A-31

B Monitoring and Analyzing Switch Operation

Contents B-1

Overview B-3

Status and Counters Data B-4

Menu Access To Status and Counters B-5

General System Information B-5

Menu Access B-5

CLI Access B-6

Switch Management Address Information B-6

Menu Access B-6

CLI Access B-7

Module Information B-8

Menu: Displaying Port Status B-8

CLI Access B-8

Port Status B-9

Menu: Displaying Port Status B-9

CLI Access B-9

Web Access B-9

Viewing Port and Trunk Group Statistics and Flow Control Status B-10

Menu Access to Port and Trunk Statistics B-11

CLI Access To Port and Trunk Group Statistics B-12

Web Browser Access To View Port and Trunk Group Statistics B-12

Viewing the Switch's MAC Address Tables B-13

Menu Access to the MAC Address Views and Searches B-13

CLI Access for MAC Address Views and Searches B-16

Spanning Tree Protocol (STP) Information B-17

Menu Access to STP Data B-17

CLI Access to STP Data B-18

Internet Group Management Protocol (IGMP) Status B-19

VLAN Information B-20

Web Browser Interface Status Information B-22

Interface Monitoring Features B-23
Menu: Configuring Port and Static Trunk Monitoring B-24
CLI: Configuring Port, Mesh, and Static Trunk Monitoring B-26
Web: Configuring Port Monitoring B-29

C Troubleshooting

Contents C-1
Overview C-3
Troubleshooting Approaches C-4
Browser or Telnet Access Problems C-5
Unusual Network Activity C-7
General Problems C-7
802.1Q Prioritization Problems C-8
ACL Problems C-8
IGMP-Related Problems C-13
LACP-Related Problems C-13
Mesh-Related Problems C-14
Port-Based Access Control (802.1x)-Related Problems C-15
QoS-Related Problems C-18
Radius-Related Problems C-18
Spanning-Tree Protocol (STP) and Fast-Uplink Problems C-19
SSH-Related Problems C-20
TACACS-Related Problems C-22
TimeP, SNTP, or Gateway Problems C-24
VLAN-Related Problems C-24
Using the Event Log To Identify Problem Sources C-27
Menu: Entering and Navigating in the Event Log C-29
CLI: Listing Events C-30
Reducing Duplicate Event Log and SNMP Trap Messages C-31
Debug and Syslog Messaging Operation C-34
Debug Command Operation C-35
Debug Types C-36
Debug Destinations C-38
Syslog Operation C-39

Viewing the Debug Configuration C-40
Steps for Configuring Debug and Syslog Messaging C-40
Operating Notes for Debug and Syslog C-44

Diagnostic Tools C-45
Port Auto-Negotiation C-45
Ping and Link Tests C-45
Web: Executing Ping or Link Tests C-47
CLI: Ping or Link Tests C-48
Displaying the Configuration File C-50
CLI: Viewing the Configuration File C-50
Web: Viewing the Configuration File C-50
Listing Switch Configuration and Operation Details C-50
CLI Administrative and Troubleshooting Commands C-52
Traceroute Command C-53

Restoring the Factory-Default Configuration C-57
CLI: Resetting to the Factory-Default Configuration C-57
Clear/Reset: Resetting to the Factory-Default Configuration . C-57

Restoring a Flash Image C-58

D MAC Address Management

Contents D-1

Overview D-2

Determining MAC Addresses D-3
Menu: Viewing the Switch's MAC Addresses D-4
CLI: Viewing the Port and VLAN MAC Addresses D-5

Viewing the MAC Addresses of Connected Devices D-8

E Daylight Savings Time on ProCurve Switches

Index

Product Documentation

About Your Switch Manual Set

Note

For the latest version of all ProCurve switch documentation, including Release Notes covering recently added features, please visit the ProCurve Networking Web site at **www.procurve.com**, click on **Technical support**, and then click on **Product manuals (all)**.

Printed Publications

The two publications listed below are printed and shipped with your switch. The latest version of each is also available in PDF format on the ProCurve Networking Web sit, as described in the above Note.

- *Read Me First*—Provides software update information, product notes, and other information.
- *Installation and Getting Started Guide*—Explains how to prepare for and perform the physical installation and connect the switch to your network.

Electronic Publications

The latest version of each of the publications listed below is available in PDF format on the ProCurve Web site, as described in the above Note.

- *Management and Configuration Guide*—Describes how to configure, manage, and monitor switch operation.
- *Advanced Traffic Management Guide*—Explains how to configure traffic management features such as STP, QoS, and IP routing.
- *Access Security Guide*—Explains how to configure access security features and user authentication on the switch.
- *Release Notes*—Describe new features, fixes, and enhancements that become available between revisions of the main product guide.

Feature Index

For the manual set supporting your switch model, the following feature index indicates which manual to consult for information on a given software feature and which switches support that feature.

Feature	Management and Configuration	Advanced Traffic Management	Access Security Guide	Supported on 5300xl	Supported on 4200vl	Supported on 3400cl/ 6400cl
802.1Q VLAN Tagging		X		yes	yes	yes
802.1X Port-Based Priority	X			yes	yes	yes
802.1X Multiple Authenticated Clients per port			X	yes	no	yes
ACLs		X		yes	no	yes
AAA Authentication			X	yes	yes	yes
Authorized IP Managers			X	yes	yes	yes
Authorized Manager List (web, telnet, TFTP)			X	yes	yes	yes
Auto MDIX Configuration	X			yes	yes	yes
BOOTP	X			yes	yes	yes
Config File	X			yes	yes	yes
Console Access	X			yes	yes	yes
Copy Command	X			yes	yes	yes
CoS (Class of Service)		X		yes	yes	yes
Debug	X			yes	yes	yes
DHCP Configuration		X		yes	yes	yes
DHCP Option 82		X		yes	yes	no
DHCP/Bootp Operation	X			yes	yes	yes
Diagnostic Tools	X			yes	yes	yes
Downloading Software	X			yes	yes	yes

Feature	Management and Configuration	Advanced Traffic Management	Access Security Guide	Supported on 5300xl	Supported on 4200vl	Supported on 3400cl/ 6400cl
Eavesdrop Protection			X	yes	yes	no
Event Log	X			yes	yes	yes
Factory Default Settings	X			yes	yes	yes
Flow Control (802.3x)	X			yes	yes	yes
File Management	X			yes	yes	yes
File Transfers	X			yes	yes	yes
Friendly Port Names	X			yes	yes	yes
Guaranteed Minimum Bandwidth (GMB)	X			yes	no	yes
GVRP		X		yes	yes	yes
IGMP		X		yes	yes	yes
Delayed Group Flush		X		yes	yes	yes
Interface Access (Telnet, Console/ Serial, Web)	X			yes	yes	yes
IP Addressing	X			yes	yes	yes
IP Routing		X		yes	yes	yes
Jumbo Support		X		no	no	yes
LACP	X			yes	yes	yes
Link	X			yes	yes	yes
LLDP	X			yes	yes	yes
LLDP-Med	X			yes	yes	no
MAC Address Management	X			yes	yes	yes
MAC Lockdown			X	yes	yes	yes
MAC Lockout			X	yes	yes	yes
MAC-based Authentication			X	yes	yes	yes
MAC authentication RADIUS support			X	yes	yes	yes
Management VLAN		X		yes	yes	yes

Feature	Management and Configuration	Advanced Traffic Management	Access Security Guide	Supported on 5300xl	Supported on 4200vl	Supported on 3400cl/ 6400cl
Meshing		X		yes	no	yes
Monitoring and Analysis	X			yes	yes	yes
Multicast Filtering			X	yes	no	no
Multiple Configuration Files	X			yes	yes	yes
Network Management Applications	X			yes	SNMP only	SNMP only
OpenView Device Management	X			yes	yes	yes
OSPF		X		yes	no	yes
Passwords			X	yes	yes	yes
Password Clear Protection			X	yes	yes	yes
PCM	X			yes	yes	yes
PIM Dense		X		yes	no	no
Ping	X			yes	yes	yes
Port Configuration	X			yes	yes	yes
Port Monitoring		X		yes	yes	yes
Port Security			X	yes	yes	yes
Port Status	X			yes	yes	yes
Port Trunking (LACP)	X			yes	yes	yes
Port-Based Access Control			X	yes	yes	yes
Port-Based Priority (802.1Q)	X			yes	yes	yes
Power over Ethernet (PoE)	X			yes	no	no
Protocol Filters			X	yes	no	no
Protocol VLANS		X		yes	no	yes
Quality of Service (QoS)		X		yes	yes	yes
RADIUS Authentication and Accounting			X	yes	yes	yes
Rate-limiting	X			yes	no	yes
RIP		X		yes	no	yes

Feature	Management and Configuration	Advanced Traffic Management	Access Security Guide	Supported on 5300xl	Supported on 4200vl	Supported on 3400cl/ 6400cl
RMON 1,2,3,9	X			yes	yes	yes
Routing		X		yes	yes	yes
Routing - IP Static		X		yes	yes	yes
Secure Copy	X			yes	yes	yes
SFLOW				yes	yes	yes
SFTP	X			yes	yes	yes
SNMPv3	X			yes	yes	yes
Software Downloads (SCP/SFTP, TFTP, Xmodem) X	X			yes	yes	yes
Source-Port Filters			X	yes	yes	yes
Spanning Tree (STP, RSTP, MSTP)		X		yes	yes	yes
SSHv2 (Secure Shell) Encryption			X	yes	yes	yes
SSL (Secure Socket Layer)			X	yes	yes	yes
Stack Management (Stacking)		X		no	yes	yes
Syslog	X			yes	yes	yes
System Information	X			yes	yes	yes
TACACS+ Authentication			X	yes	yes	yes
Telnet Access	X			yes	yes	yes
TFTP	X			yes	yes	yes
Time Protocols (TimeP, SNTP)	X			yes	yes	yes
Traffic/Security Filters			X	yes	yes	yes
Troubleshooting	X			yes	yes	yes
UDP Forwarder		X		yes	yes	yes
Virtual Stacking		X		no	yes	yes
Virus Throttling (connection-rate filtering)			X	yes	no	no
VLANs		X		yes	yes	yes
VLAN Mirroring (1 static VLAN)		X		yes	yes	no

Feature	Management and Configuration	Advanced Traffic Management	Access Security Guide	Supported on 5300xl	Supported on 4200vl	Supported on 3400cl/ 6400cl
Voice VLAN		X		yes	yes	yes
Web Authentication RADIUS Support			X	yes	yes	yes
Web-based Authentication			X	yes	yes	yes
Web UI	X			yes	yes	yes
Xmodem	X			yes	yes	yes
XRRP		X		yes	no	yes

1

Getting Started

Contents

Introduction 1-2

Conventions 1-2

Feature Descriptions by Model 1-2

Command Syntax Statements 1-3

Command Prompts 1-3

Screen Simulations 1-4

Port Identity Examples 1-4

Keys 1-4

Sources for More Information 1-4

Getting Documentation From the Web 1-6

Online Help 1-7

Need Only a Quick Start? 1-8

IP Addressing 1-8

To Set Up and Install the Switch in Your Network 1-9

Introduction

This *Management and Configuration Guide* is intended for use with the following switches:

- ProCurve Switch 10G CX4 6400cl-6xg
- ProCurve Switch 10G X2 6400cl-6xg
- ProCurve Switch 5304xl
- ProCurve Switch 5348xl
- ProCurve Switch 5308xl
- ProCurve Switch 5372xl
- ProCurve Switch 4204vl
- ProCurve Switch 4208vl
- ProCurve Switch 4202vl-48G
- ProCurve Switch 4202vl-72
- ProCurve Switch 3400cl-24G
- ProCurve Switch 3400cl-48G

This guide describes how to use the command line interface (CLI), Menu interface, and web browser to configure, manage, monitor, and troubleshoot switch operation.

For an overview of other product documentation for the above switches, refer to *"Product Documentation"* on page xix.

The *Product Documentation CD-ROM* shipped with the switch includes a copy of this guide. You can also download a copy from the ProCurve Networking web site, **www.procurve.com**.

Conventions

This guide uses the following conventions for command syntax and displayed information.

Feature Descriptions by Model

In cases where a software feature is not available in all of the switch models covered by this guide, the section heading specifically indicates which product or product series offer the feature.

For example, (the switch is highlighted here in **bold italics**):

"QoS Pass-Through Mode on the **Series 5300xl and 4200vl Switches**".

Command Syntax Statements

Syntax: ip default-gateway < *ip-addr* >

Syntax: show interfaces [*port-list*]

- Vertical bars (|) separate alternative, mutually exclusive elements.
- Square brackets ([ ]) indicate optional elements.
- Braces (< >) enclose required elements.
- Braces within square brackets ([< >]) indicate a required element within an optional choice.
- Boldface indicates use of a CLI command, part of a CLI command syntax, or other displayed element in general text. For example:

  "Use the **copy tftp** command to download the key from a TFTP server."
- Italics indicate variables for which you must supply a value when executing the command. For example, in this command syntax, you must provide one or more port numbers:

  Syntax: aaa port-access authenticator < *port-list* >

Command Prompts

In the default configuration, your switch displays one of the following CLI prompts:

```
ProCurve 6400cl#
ProCurve 5304xl#
ProCurve 5308xl#
ProCurve 4204vl#
ProCurve 4208vl#
ProCurve 3400-24cl#
ProCurve  3400-48cl#
```

To simplify recognition, this guide uses **ProCurve** to represent command prompts for all models. For example:

```
ProCurve#
```

(You can use the **hostname** command to change the text in the CLI prompt.)

Screen Simulations

Displayed Text. Figures containing simulated screen text and command output look like this:

```
ProCurve> show version
Image stamp:   /sw/code/build/info
               September 30 2005 13:43:13
               E.08.22
               139

ProCurve>
```

Figure 1-1. Example of a Figure Showing a Simulated Screen

In some cases, brief command-output sequences appear without figure identification. For example:

```
ProCurve(config)# clear client-public-key
ProCurve(config)# show ip client-public-key
show_client_public_key: cannot stat keyfile
```

Port Identity Examples

This guide describes software applicable to both chassis-based and stackable ProCurve switches. Where port identities are needed in an example, this guide uses the chassis-based port identity system, such as “A1, “B3-B5”, “C7”, etc. However, unless otherwise noted, such examples apply equally to the stackable switches, which typically use only numbers, such as “1”, “3-5”, “15”, etc. for port identities.

Keys

Simulations of actual keys use a bold, sans-serif typeface with square brackets. For example, the Tab key appears as **[Tab]** and the “Y” key appears as **[Y]**.

Sources for More Information

For additional information about switch operation and features not covered in this guide, consult the following sources:

- For information on which product manual to consult on a given software feature, refer to the chapter *“Product Documentation”*.

Note

For the latest version of all ProCurve switch documentation, including Release Notes covering recently added features, visit the ProCurve Networking web site at **www.procurve.com**, click on **Technical support**, and then click on **Product Manuals (all)**.

- Software Release Notes—Release notes are posted on the ProCurve Networking web site and provide information on new software updates:
  - New features and how to configure and use them
  - Software management, including downloading software to the switch
  - Software fixes addressed in current and previous releases

  To view and download a copy of the latest software release notes for your switch, refer to "Getting Documentation From the Web" on page 1-6.
- Product Notes and Software Update Information—The printed *Read Me First* shipped with your switch provides software update information, product notes, and other information. For the latest version, refer to "Getting Documentation From the Web" on page 1-6.
- Installation and Getting Started Guide—Use the *Installation and Getting Started Guide* shipped with your switch to prepare for and perform the physical installation. This guide also steps you through connecting the switch to your network and assigning IP addressing, as well as describing the LED indications for correct operation and trouble analysis. A PDF version of this guide is also provided on the *Product Documentation CD-ROM* shipped with the switch. And you can download a copy from the ProCurve Networking web site. (See "Getting Documentation From the Web" on page 1-6.)
- Advanced Traffic Management Guide—Use the *Advanced Traffic Management Guide* for information on:
  - VLANs: Static port-based and protocol VLANs, and dynamic GVRP VLANs
  - Multicast traffic control (IGMP) and Protocol-Independent Multicast routing (PIM-DM)
  - Spanning-Tree: 802.1D (STP), 802.1w (RSTP), and 802.1s (MSTP)
  - Meshing
  - Quality-of-Service (QoS)
  - Access Control Lists (ACLs)
  - IP routing
  - Static NAT for intranet applications (*Series 5300xl switches only*)
  - XRRP (XL Router Redundancy Protocol)

- Access Security Guide—Use the *Access Security Guide* for information on:
  - Local username and password security
  - Web-Based and MAC-based authentication
  - RADIUS and TACACS+ authentication
  - SSH (Secure Shell) and SSL (Secure Socket Layer) operation
  - 802.1x port-based access control
  - Port security operation with MAC-based control
  - Authorized IP Manager security
  - Key Management System (KMS)

Getting Documentation From the Web

1. Go to the ProCurve Networking web site at

   www.procurve.com
2. Click on **Technical support**.
3. Click on **Product manuals (all)**.
4. Click on the product for which you want to view or download a manual.

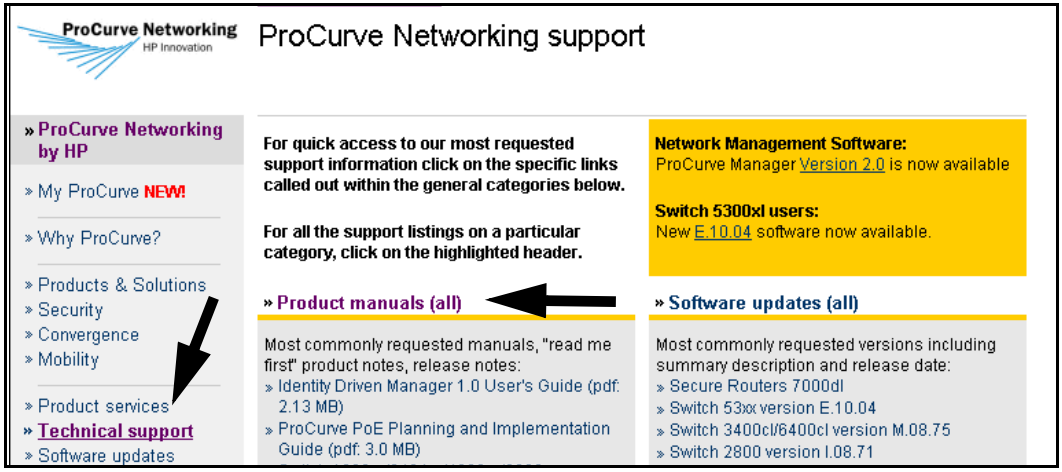

Figure 1-2. Example of How to Locate Product Manuals on the ProCurve Networking Web Site

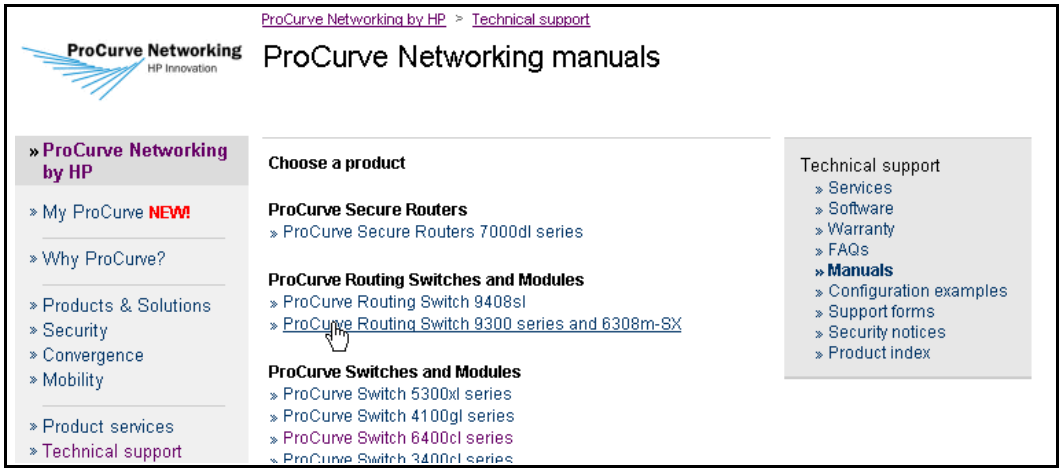

Figure 1-3. Listing of ProCurve Manuals on the ProCurve Networking Web Site

Online Help

If you need information on specific parameters in the menu interface, refer to the online help provided in the interface. For example:

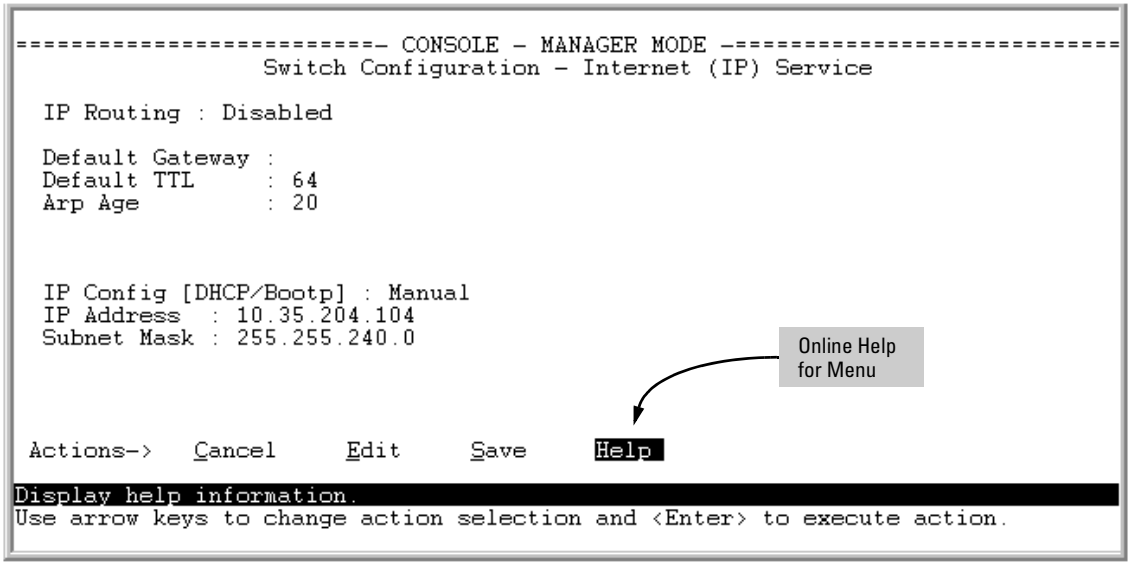

If you need information on a specific command in the CLI, type the command name followed by “help”. For example:

```
ProCurve# write help
Usage: write <memory|terminal>

Description: View or save the running configuration of the switch.
             write terminal - displays the running configuration of the
                              switch on the terminal
             write memory   - saves the running configuration of the
                              switch to flash. The saved configuration
                              becomes the boot-up configuration of the switch
                              the next time it is booted.
```

If you need information on specific features in the web browser interface, use the online help available for the web browser interface. For more information on web browser Help options, refer to “Online Help for the Web Browser Interface” on page 5-11.

If you need further information on ProCurve switch technology, visit the ProCurve Networking web site at:

www.procurve.com

Need Only a Quick Start?

IP Addressing

If you just want to give the switch an IP address so that it can communicate on your network, or if you are not using VLANs, ProCurve recommends that you use the Switch Setup screen to quickly configure IP addressing. To do so, do one of the following:

- Enter **setup** at the CLI Manager level prompt.

  `Procurve# setup`

- In the Main Menu of the Menu interface, select

  8. Run Setup

For more on using the Switch Setup screen, see the *Installation and Getting Started Guide* you received with the switch.

To Set Up and Install the Switch in Your Network

Use the ProCurve *Installation and Getting Started Guide* (shipped with the switch) for the following:

- Notes, cautions, and warnings related to installing and using the switch and its related modules
- Instructions for physically installing the switch in your network
- Quickly assigning an IP address and subnet mask, set a Manager password, and (optionally) configure other basic features.
- Interpreting LED behavior.

For the latest version of the *Installation and Getting Started Guide* for your switch, refer to "Getting Documentation From the Web" on page 1-6.

— This page unused intentionally—

2

Selecting a Management Interface

Contents

Overview 2-2

Understanding Management Interfaces 2-2

Advantages of Using the Menu Interface 2-3

Advantages of Using the CLI 2-4

General Benefits 2-4

Information on Using the CLI 2-5

Advantages of Using the Web Browser Interface 2-5

Advantages of Using ProCurve Manager or ProCurve Manager Plus 2-7

Overview

This chapter describes the following:

- Management interfaces for the switches covered by this guide
- Advantages of using each interface

Understanding Management Interfaces

Management interfaces enable you to reconfigure the switch and to monitor switch status and performance. The switch offers the following interfaces:

- **Menu interface**—a menu-driven interface offering a subset of switch commands through the built-in VT-100/ANSI console—**2-3**
- **CLI**—a command line interface offering the full set of switch commands through the VT-100/ANSI console built into the switch—**2-4**
- **Web browser interface** --a switch interface offering status information and a subset of switch commands through a standard web browser (such as Netscape Navigator or Microsoft Internet Explorer)—**2-5**
- **ProCurve Manager (PCM)—**a windows-based network management solution included in-box with all manageable ProCurve devices. Features include automatic device discovery, network status summary, topology and mapping, and device management.
- **ProCurve Manager Plus (PCM+)—**a complete windows-based network management solution that provides both the basic features offered with PCM, as well as more advanced management features, including in-depth traffic analysis, group and policy management, configuration management, device software updates, and advanced VLAN management. (ProCurve includes a copy of PCM+ in-box for a free 30-day trial.)

This manual describes how to use the menu interface (chapter 2), the CLI (chapter 3), the web browser interface (chapter 4), and how to use these interfaces to configure and monitor the switch.

For information on how to access the web browser interface Help, see “Online Help for the Web Browser Interface” on page 5-11.

To use ProCurve Manager or ProCurve Manager Plus, refer to the *Getting Started Guide* and the *Administrator's Guide*, which are available electronically with the software for these applications. For more information, visit the ProCurve Networking web site at **www.procurve.com**.

Advantages of Using the Menu Interface

```
=========================- CONSOLE - MANAGER MODE -============================
                                   Main Menu

   1. Status and Counters...
   2. Switch Configuration...
   3. Console Passwords...
   4. Event Log
   5. Command Line (CLI)
   6. Reboot Switch
   7. Download OS
   8. Run Setup
   9. Stacking...
   0. Logout


Provides the menu to display configuration, status, and counters.
To select menu item, press item number, or highlight item and press <Enter>.
```

Figure 2-1. Example of the Console Interface Display (3400cl/6400cl Switches)

- **Provides quick, easy management access** to a menu-driven subset of switch configuration and performance features:

  - IP addressing
  - VLANs and GVRP
  - Port Security
  - Port and Static Trunk Group
  - Spanning Tree
  - System information
  - Local passwords
  - SNMP communities
  - Time protocols
  - Stacking (3400cl/6400cl/4200vl switches only)

  The menu interface also provides access for:

  - Setup screen
  - Event Log display
  - Switch and port status displays
  - Switch and port statistic and counter displays
  - Reboots
  - Software downloads

- **Offers out-of-band access** (through the RS-232 connection) to the switch, so network bottlenecks, crashes, lack of configured or correct IP address, and network downtime do not slow or prevent access
- **Enables Telnet (in-band) access** to the menu functionality.
- **Allows faster navigation**, avoiding delays that occur with slower display of graphical objects over a web browser interface.
- **Provides more security**; configuration information and passwords are not seen on the network.

Advantages of Using the CLI

`ProCurve>`	Prompt for Operator Level
`ProCurve#`	Prompt for Manager Level
`ProCurve(config)#`	Prompt for Global Configuration Level

`ProCurve(<context>)#`
For example:
`ProCurve(eth-1-5)#`
`ProCurve(vlan-1)#`
`ProCurve(pim)#`
`ProCurve(rip)#`
	Prompt for Context Configuration Levels

Figure 2-2. Command Prompt Examples

General Benefits

- Provides access to the complete set of the switch configuration, performance, and diagnostic features.
- Offers out-of-band access (through the RS-232 connection) or Telnet (in-band) access.
- Enables quick, detailed system configuration and management access to system operators and administrators experienced in command prompt interfaces.
- Provides help at each level for determining available options and variables.

Information on Using the CLI

- For information on how to use the CLI, refer to chapter 3. “Using the Command Line Interface (CLI)”.
- To perform specific procedures (such as configuring IP addressing or VLANs), use the Contents listing at the front of the manual to locate the information you need.
- For monitoring and analyzing switch operation, refer to appendix B.
- For information on individual CLI commands, refer to the Index or to the online Help provided in the CLI interface.

Advantages of Using the Web Browser Interface

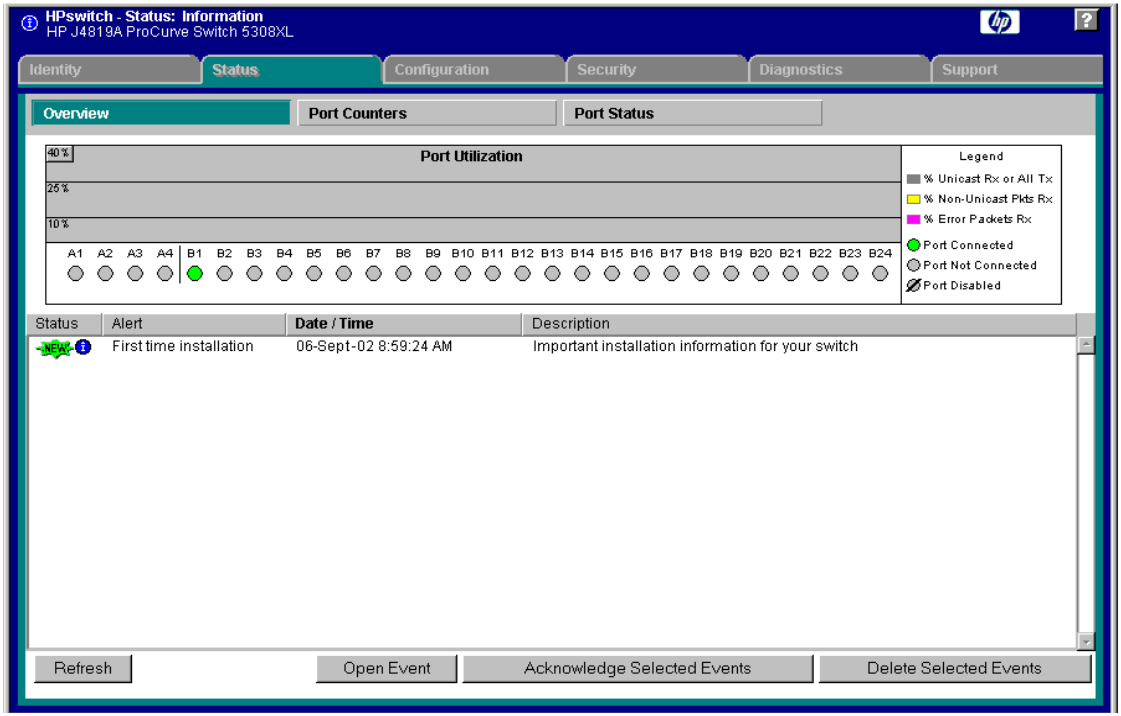

Figure 2-3. Example of the Web Browser Interface

- **Easy access** to the switch from anywhere on the network

- **Familiar browser interface**--locations of window objects consistent with commonly used browsers, uses mouse clicking for navigation, no terminal setup
- **Many features have all their fields in one scree**n so you can view all values at once
- **More visual cues**, using colors, status bars, device icons, and other graphical objects instead of relying solely on alphanumeric values
- **Display of acceptable ranges of values available** in configuration list boxes

Advantages of Using ProCurve Manager or ProCurve Manager Plus

You can operate ProCurve Manager and ProCurve Manager Plus (PCM and PCM+) from a PC on the network to monitor traffic, manage your hubs and switches, and proactively recommend network changes to increase network uptime and optimize performance. Easy to install and use, PCM and PCM+ are the answers to your management challenges.

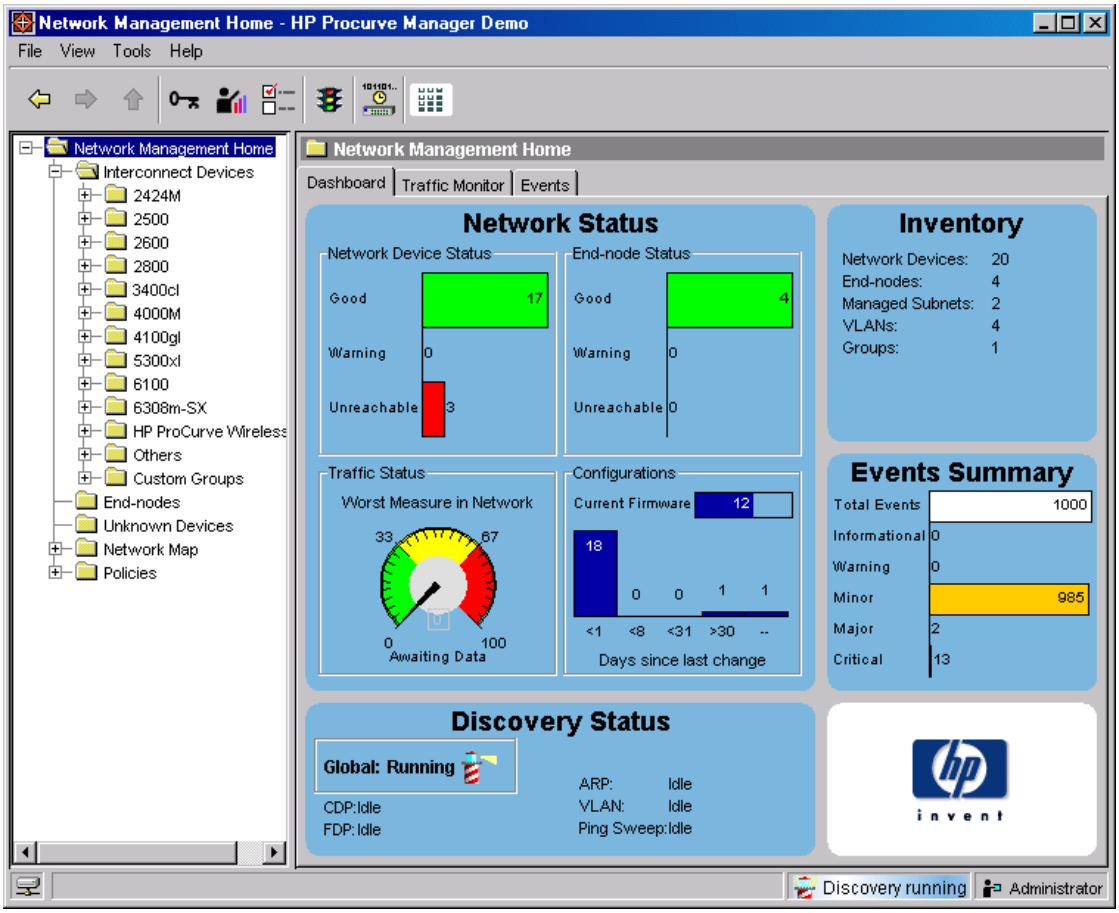

Figure 2-4. Example of the Home Page for ProCurve Manager Plus

PCM and PCM+ enable greater control, uptime, and performance in your network:

- Features and benefits of ProCurve Manager:
  - **Network Status Summary:** Upon boot-up, a network status screen displays high-level information on network devices, end nodes, events, and traffic levels. From here, users can research any one of these areas to get more details.
  - **Alerts and Troubleshooting:** An events summary screen displays alerts to the user and categorizes them by severity, making it easier to track where bottlenecks and issues exist in the network. Alerts present detailed information on the problem, even down to the specific port.
  - **Automatic Device Discovery:** This feature is customized for fast discovery of all ProCurve manageable network devices. The user can define which IP subnets to discover.
  - **Topology and Mapping:** This feature automatically creates a map of discovered network devices. Maps are color-coded to reflect device status and can be viewed at multiple levels (physical view, subnet view, or VLAN view).
  - **Device Management:** Many device-focused tasks can be performed directly by the software, or the user can access web-browser and command-line interfaces with the click of a button to manage individual devices from inside the tool.
- Features and benefits of ProCurve Manager Plus:
  - **All of the Features of ProCurve Manager:** Refer to the above listing.
  - **In-Depth Traffic Analysis:** An integrated, low-overhead traffic monitor interface shows detailed information on traffic throughout the network. Using enhanced traffic analysis protocols such as Extended RMON and sFlow, users can monitor overall traffic levels, segments with the highest traffic, or even the top users within a network segment.
  - **Group and Policy Management:** Changes in configuration are tracked and logged, and archived configurations can be applied to one or many devices. Configurations can be compared over time or between two devices, with the differences highlighted for users.
  - **Advanced VLAN Management:** A new, easy-to-use VLAN management interface allows users to create and assign VLANs across the entire network, without having to access each network device individually.

- **Device Software Updates:** This feature automatically obtains new device software images from ProCurve and updates devices, allowing users to download the latest version or choose the desired version. Updates can be scheduled easily across large groups of devices, all at user-specified times.
- **Investment Protection:** The modular software architecture of ProCurve Manager Plus will allow ProCurve to offer network administrators add-on software solutions that complement their needs.

— This page is intentionally unused. —

Using the Menu Interface

Contents

Overview 3-2

Starting and Ending a Menu Session 3-3

How To Start a Menu Interface Session 3-4

How To End a Menu Session and Exit from the Console: 3-5

Main Menu Features 3-7

Screen Structure and Navigation 3-9

Rebooting the Switch 3-12

Menu Features List 3-14

Where To Go From Here 3-15

Overview

This chapter describes the following features:

- Overview of the Menu Interface (page 3-2)
- Starting and ending a Menu session (page 3-3)
- The Main Menu (page 3-7)
- Screen structure and navigation (page 3-9)
- Rebooting the switch (page 3-12)

The menu interface operates through the switch console to provide you with a subset of switch commands in an easy-to-use menu format enabling you to:

- Perform a "quick configuration" of basic parameters, such as the IP addressing needed to provide management access through your network
- Configure these features:
  - Manager and Operator passwords
  - System parameters
  - IP addressing
  - Time protocol
  - Ports
  - Trunk groups
  - A network monitoring port
  - Stack Management (3400cl and 6400cl switches only)
  - Spanning Tree operation
  - SNMP community names
  - IP authorized managers
  - VLANs (Virtual LANs) and GVRP
- View status, counters, and Event Log information
- Update switch software
- Reboot the switch

For a detailed list of menu features, see the "Menu Features List" on page 3-14.

Privilege Levels and Password Security. ProCurve strongly recommends that you configure a Manager password to help prevent unauthorized access to your network. A Manager password grants full read-write access to the switch. An Operator password, if configured, grants access to status and counter, Event Log, and the Operator level in the CLI. After you configure passwords on the switch and log off of the interface, access to the menu interface (and the CLI and web browser interface) will require entry of either the Manager or Operator password. (If the switch has only a Manager password, then someone without a password can still gain read-only access.)

Note

If the switch has neither a Manager nor an Operator password, anyone having access to the console interface can operate the console with full manager privileges. Also, if you configure only an Operator password, entering the Operator password enables full manager privileges.

For more information on passwords, refer to the *Access Security Guide* for your switch.

Menu Interaction with Other Interfaces.

- The menu interface displays the current running-config parameter settings. You can use the menu interface to save configuration changes made in the CLI only if the CLI changes are in the running config when you save changes made in the menu interface. (For more on how switch memory manages configuration changes, see Chapter 6, "Switch Memory and Configuration".)
- A configuration change made through any switch interface overwrites earlier changes made through any other interface.
- The Menu Interface and the CLI (Command Line Interface) both use the switch console. To enter the menu from the CLI, use the **menu** command. To enter the CLI from the Menu interface, select **Command Line (CLI)** option.)

Starting and Ending a Menu Session

You can access the menu interface using any of the following:

- A direct serial connection to the switch's console port, as described in the installation guide you received with the switch
- A Telnet connection to the switch console from a networked PC or the switch's web browser interface. Telnet requires that an IP address and subnet mask compatible with your network have already been configured on the switch.

Note

This section assumes that either a terminal device is already configured and connected to the switch (see the *Installation and Getting Started Guide* shipped with your switch) or that you have already configured an IP address on the switch (required for Telnet access).

How To Start a Menu Interface Session

In its factory default configuration, the switch console starts with the CLI prompt. To use the menu interface with Manager privileges, go to the Manager level prompt and enter the **menu** command.

1. Use one of these methods to connect to the switch:
   - A PC terminal emulator or terminal
   - Telnet
2. Do one of the following:
   - If you are using Telnet, go to step 3.
   - If you are using a PC terminal emulator or a terminal, press **[Enter]** one or more times until a prompt appears.
3. When the switch screen appears, do one of the following:
   - If a password has been configured, the password prompt appears.

     ```
     Password: _
     ```

     Type the Manager password and press **[Enter]**. Entering the Manager password gives you manager-level access to the switch. (Entering the Operator password gives you operator-level access to the switch. Refer to the *Access Security Guide* for your switch.)
   - If no password has been configured, the CLI prompt appears. Go to the next step.
4. When the CLI prompt appears, display the Menu interface by entering the **menu** command. For example:

   `ProCurve# menu` **[Enter]**

   results in the following display:

```
========================- CONSOLE - MANAGER MODE -============================
                                Main Menu

   1. Status and Counters...
   2. Switch Configuration...
   3. Console Passwords...
   4. Event Log
   5. Command Line (CLI)
   6. Reboot Switch
   7. Download OS
   8. Run Setup
   9. Stacking...
   0. Logout

Provides the menu to display configuration, status, and counters.
To select menu item, press item number, or highlight item and press <Enter>.
```

Stacking is available on Series 3400cl and Series 6400cl switches.

Figure 3-1. Example of the Main Menu with Manager Privileges

For a description of Main Menu features, see "Main Menu Features" on page 3-7.

Note

To configure the switch to start with the menu interface instead of the CLI, go to the Manager level prompt in the CLI, enter the **setup** command, and in the resulting display, change the **Logon Default** parameter to **Menu**. For more information, see the *Installation and Getting Started Guide* you received with the switch.

How To End a Menu Session and Exit from the Console

The method for ending a menu session and exiting from the console depends on whether, during the session, you made any changes to the switch configuration that require a switch reboot to activate. (Most changes via the menu interface need only a **Save**, and do not require a switch reboot.) Configuration changes needing a reboot are marked with an asterisk (*) next to the configured item in the menu and also next to the **Switch Configuration** item in the Main Menu.

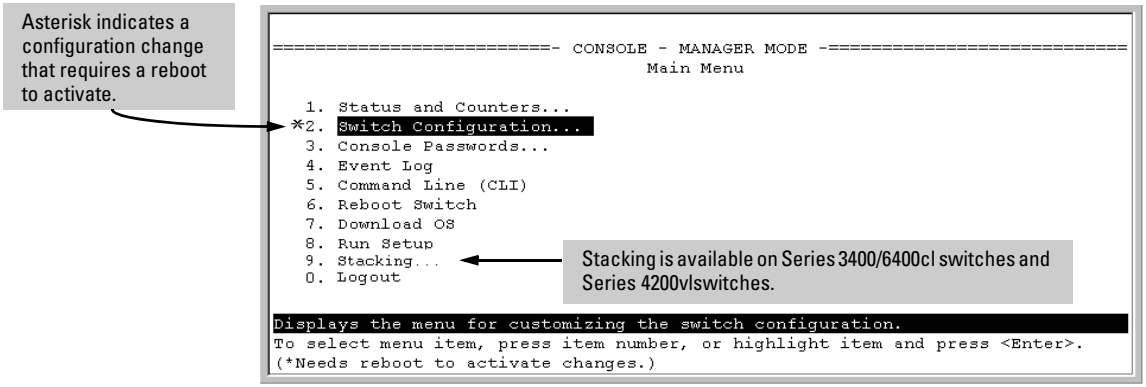

Figure 3-2. Example Indication of a Configuration Change Requiring a Reboot

1. In the current session, if you have not made configuration changes that require a switch reboot to activate, return to the Main Menu and press **[0]** (zero) to log out. Then just exit from the terminal program, turn off the terminal, or quit the Telnet session.

2. If you *have* made configuration changes that require a switch reboot—that is, if an asterisk (*) appears next to a configured item or next to **Switch Configuration** in the Main Menu:

   a. Return to the Main Menu.

   b. Press **[6]** to select **Reboot Switch** and follow the instructions on the reboot screen.

   Rebooting the switch terminates the menu session, and, if you are using Telnet, disconnects the Telnet session.

   (See “Rebooting To Activate Configuration Changes” on page 3-13.)

3. Exit from the terminal program, turn off the terminal, or close the Telnet application program.

Main Menu Features

```
========================- CONSOLE - MANAGER MODE -============================
                                Main Menu

   1. Status and Counters...
   2. Switch Configuration...
   3. Console Passwords...
   4. Event Log
   5. Command Line (CLI)
   6. Reboot Switch
   7. Download OS
   8. Run Setup
   9. Stacking...
   0. Logout


Provides the menu to display configuration, status, and counters.
To select menu item, press item number, or highlight item and press <Enter>.
```

Figure 3-3. The Main Menu View with Manager Privileges

The Main Menu gives you access to these Menu interface features:

- **Status and Counters:** Provides access to display screens showing switch information, port status and counters, port and VLAN address tables, and spanning tree information. (See Appendix B, “Monitoring and Analyzing Switch Operation”.)
- **Switch Configuration:** Provides access to configuration screens for displaying and changing the current configuration settings. (See the Contents listing at the front of this manual.) For a listing of features and parameters configurable through the menu interface, see the “Menu Features List” on page 3-14 .
- **Console Passwords:** Provides access to the screen used to set or change Manager-level and Operator-level passwords, and to delete Manager and Operator password protection. (Refer to the chapter on configuring usernames and passwords in the *Access Security Guide* for your switch.)
- **Event Log:** Enables you to read progress and error messages that are useful for checking and troubleshooting switch operation. (See “Using the Event Log To Identify Problem Sources” on page C-27.)

- **Command Line (CLI):** Selects the Command Line Interface at the same level (Manager or Operator) that you are accessing in the Menu interface. (Refer to chapter 3, “Using the Command Line Interface (CLI)”.)
- **Reboot Switch:** Performs a “warm” reboot of the switch, which clears most temporary error conditions, resets the network activity counters to zero, and resets the system up-time to zero. A reboot is required to activate a change in the VLAN Support parameter. (See “Rebooting from the Menu Interface” on page 6-11.)
- **Download OS:** Enables you to download a new switch software version to the switch. (See Appendix A, “File Transfers”.)
- **Run Setup:** Displays the Switch Setup screen for quickly configuring basic switch parameters such as IP addressing, default gateway, logon default interface, spanning tree, and others. (See the *Installation and Getting Started Guide* for your switch.)
- **Logout:** Closes the Menu interface and console session, and disconnects Telnet access to the switch. (See “How to End a Menu Session and Exit from the Console” on page 3-5.)

Screen Structure and Navigation

Menu interface screens include these three elements:

- Parameter fields and/or read-only information such as statistics
- Navigation and configuration actions, such as Save, Edit, and Cancel
- Help line to describe navigation options, individual parameters, and read-only data

For example, in the following System Information screen:

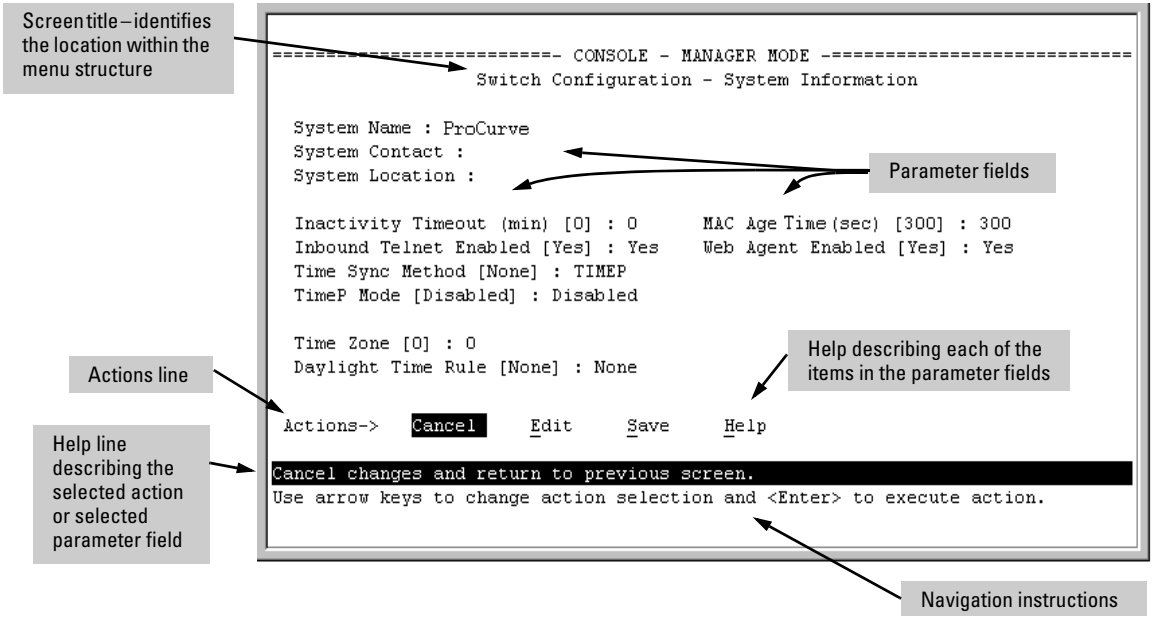

Figure 3-4. Elements of the Screen Structure

"Forms" Design. The configuration screens, in particular, operate similarly to a number of PC applications that use forms for data entry. When you first enter these screens, you see the current configuration for the item you have selected. To change the configuration, the basic operation is to:

1. Press **[E]** to select the **Edit** action.
2. Navigate through the screen making all the necessary configuration changes. (See Table 4-1 on the next page.)
3. Press **[Enter]** to return to the **Actions** line. From there you can save the configuration changes or cancel the changes. Cancel returns the configuration to the values you saw when you first entered the screen.

Table 3-1. How To Navigate in the Menu Interface

Task:	Actions:
Execute an action from the "Actions –>" list at the bottom of the screen:	Use either of the following methods: • Use the arrow keys (← ,or →) to highlight the action you want to execute, then press **[Enter]**. • Press the key corresponding to the capital letter in the action name. For example, in a configuration menu, press **[E]** to select Edit and begin editing parameter values.
Reconfigure (edit) a parameter setting or a field:	1. Select a configuration item, such as **System Name**. (See figure 3-4.) 2. Press **[E]** (for **Edit** on the Actions line). 3. Use **[Tab]** or the arrow keys (←, →, ↑, or ↓) to highlight the item or field. 4. Do one of the following: – If the parameter has preconfigured values, either use the Space bar to select a new option or type the first part of your selection and the rest of the selection appears automatically. (The help line instructs you to "Select" a value.) – If there are no preconfigured values, type in a value (the Help line instructs you to "Enter" a value). 5. If you want to change another parameter value, return to step 3. 6. If you are finished editing parameters in the displayed screen, press **[Enter]** to return to the Actions line and do one of the following: – To save and activate configuration changes, press **[S]** (for the **Save** action). This saves the changes in the startup configuration and also implements the change in the currently running configuration. (See Chapter 6, "Switch Memory and Configuration".) – To exit from the screen without saving any changes that you have made (or if you have not made changes), press **[C]** (for the **Cancel** action). ***Note:*** In the menu interface, executing Save activates most parameter changes and saves them in the startup configuration (or flash) memory, and it is therefore not necessary to reboot the switch after making these changes. But if an asterisk appears next to any menu item you reconfigure, the switch will not activate or save the change for that item until you reboot the switch. In this case, rebooting should be done after you have made all desired changes and then returned to the Main Menu. 7. When you finish editing parameters, return to the Main Menu. 8. If necessary, reboot the switch by highlighting Reboot Switch in the Main Menu and pressing **[Enter]**. (See the ***Note***, above.)
Exit from a read-only screen.	Press **[B]** (for the **Back** action).

To get Help on individual parameter descriptions. In most screens there is a **Help** option in the **Actions** line. Whenever any of the items in the **Actions** line is highlighted, press **[H]**, and a separate help screen is displayed. For example:

Pressing **[H]** or highlighting Help and pressing **[Enter]** displays Help for the parameters listed in the upper part of the screen

Highlight on any item in the Actions line indicates that the Actions line is active.

The Help line provides a brief descriptor of the highlighted Action item or parameter.

```
========================- CONSOLE - MANAGER MODE -============================
                    Switch Configuration - System Information

  System Name : ProCurve
  System Contact :
  System Location :

  Inactivity Timeout (min) [0] : 0       MAC Age Time(sec) [300] : 300
  Inbound Telnet Enabled [Yes] : Yes     Web Agent Enabled [Yes] : Yes
  Time Sync Method [None] : TIMEP
  TimeP Mode [Disabled] : Disabled

  Time Zone [0] : 0
  Daylight Time Rule [None] : None

 Actions->    Cancel     Edit     Save     Help

Cancel changes and return to previous screen.
Use arrow keys to change action selection and <Enter> to execute action.
```

Figure 3-5. Example Showing How To Display Help

To get Help on the actions or data fields in each screen: Use the arrow keys ([←], [→], [↑], or [↓]) to select an action or data field. The help line under the **Actions** items describes the currently selected action or data field.

For guidance on how to navigate in a screen: See the instructions provided at the bottom of the screen, or refer to "Screen Structure and Navigation" on page 3-9.)

Rebooting the Switch

Rebooting the switch from the menu interface

- Terminates all current sessions and performs a reset of the operating system
- Activates any menu interface configuration changes that require a reboot
- Resets statistical counters to zero

(Note that statistical counters can be reset to zero without rebooting the switch.)

To Reboot the switch, use the **Reboot Switch** option in the Main Menu. (Note that **Reboot Switch** is not available if you log on in Operator mode; that is, if you enter an Operator password instead of a manager password at the password prompt.)

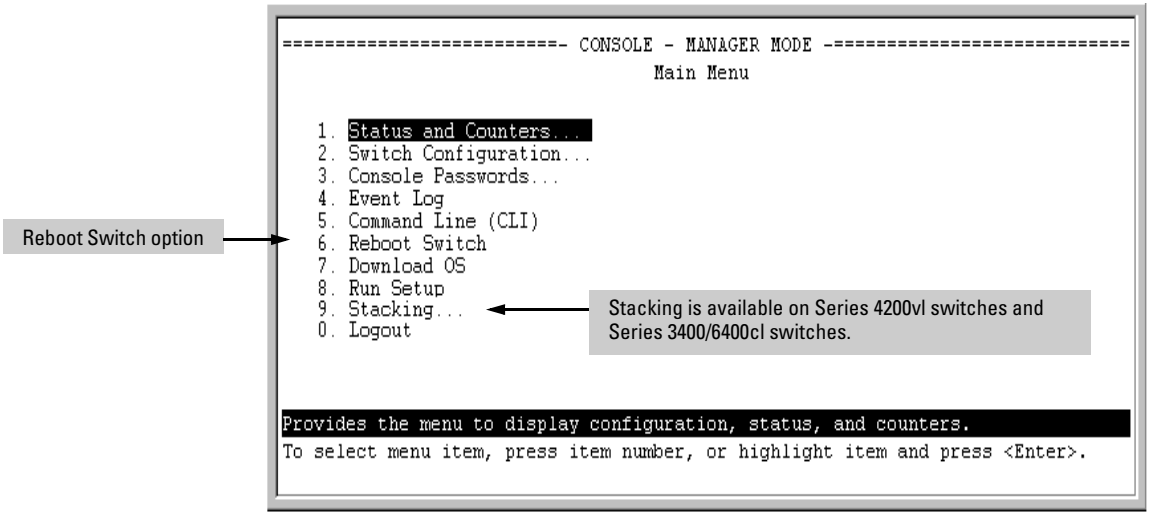

Figure 3-6. The Reboot Switch Option in the Main Menu

Rebooting To Activate Configuration Changes. Configuration changes for most parameters in the menu interface become effective as soon as you save them. However, you must reboot the switch in order to implement a change in the **Maximum VLANs to support parameter**. (To access this parameter, go to the Main Menu and select:

2. Switch Configuration

8. VLAN Menu

1. VLAN Support.

If you make configuration changes in the menu interface that require a reboot, the switch displays an asterisk (*****) next to the menu item in which the change has been made. For example, if you change and save the value for the **Maximum VLANs to support** parameter, an asterisk appears next to the **VLAN Support** entry in the VLAN Menu screen, and also next to the **Switch Configuration** ..entry in the Main Menu, as shown in figure 4-6:

Asterisk indicates a configuration change that requires a reboot in order to take effect.

Reminder to reboot the switch to activate configuration changes.

```
==========================- CONSOLE - MANAGER MODE -============================
                            Switch Configuration Menu

   1. System Information
   2. Port/Trunk Settings
   3. Network Monitoring Port
   4. Spanning Tree Operation
   5. IP Configuration
   6. SNMP Community Names
   7. IP Authorized Managers
  *8. VLAN Menu...
   0. Return to Main Menu...


Displays the menu to activate and configure, or deactivate VLAN support.
To select menu item, press item number, or highlight item and press <Enter>.
(*Needs reboot to activate changes.)
```

Figure 3-7. Indication of a Configuration Change Requiring a Reboot

To activate changes indicated by the asterisk, go to the Main Menu and select the **Reboot Switch** option.

Note

Executing the **write memory** command in the CLI does not affect pending configuration changes indicated by an asterisk in the menu interface. That is, only a reboot from the menu interface or a **boot** or **reload** command from the CLI will activate a pending configuration change indicated by an asterisk.

Menu Features List

Status and Counters

- General System Information
- Switch Management Address Information
- Port Status
- Port Counters
- Address Table
- Port Address Table
- Spanning Tree Information

Switch Configuration

- System Information
- Port/Trunk Settings
- Network Monitoring Port
- Spanning Tree Operation
- IP Configuration
- SNMP Community Names
- IP authorized Managers
- VLAN Menu

Console Passwords

Event Log

Command Line (CLI)

Reboot Switch

Download OS (Download Switch Software)

Run Setup

Stacking (Series 3400cl, Series 6400cl and Series 4200vl switches)

- Stacking Status (This Switch)
- Stacking Status (All)
- Stack Configuration
- Stack Management *(Stack Commander Only)*
- Stack Access *(Stack Commander Only)*

Logout

Where To Go From Here

This chapter provides an overview of the menu interface and how to use it. The following table indicates where to turn for detailed information on how to use the individual features available through the menu interface.

Option:	Turn to:
To use the Run Setup option	Refer to the *Installation and Getting Started Guide* shipped with the switch.
To view and monitor switch status and counters	Appendix B, "Monitoring and Analyzing Switch Operation"
To learn how to configure and use passwords and other security features	Refer to the *Access Security Guide* for your switch.
To learn how to use the Event Log	"Using the Event Log To Identify Problem Sources" on page C-27
To learn how the CLI operates	Chapter 4, "Using the Command Line Interface (CLI)"
To download switch software	Appendix A, "File Transfers"
For a description of how switch memory handles configuration changes	Chapter 6, "Switch Memory and Configuration"
For information on other switch features and how to configure them	Refer to the Table of Contents at the front of this guide, and to "Sources for More Information" on page 1-4.

— This page is intentionally unused. —

4

Using the Command Line Interface (CLI)

Contents

Overview 4-2

Accessing the CLI 4-2

Using the CLI 4-2

Privilege Levels at Logon 4-3

Privilege Level Operation 4-4

Operator Privileges 4-4

Manager Privileges 4-5

How To Move Between Levels 4-7

Listing Commands and Command Options 4-8

Listing Commands Available at Any Privilege Level 4-8

Listing Command Options 4-10

Displaying CLI “Help” 4-11

Configuration Commands and the Context Configuration Modes . . 4-12

Configuring Custom Login Banners for the Console and Web Browser Interfaces 4-15

Banner Operation with Telnet, Serial, or SSHv2 Access 4-16

Banner Operation with Web Browser Access 4-16

Configuring and Displaying a Non-Default Banner 4-16

Example of Configuring and Displaying a Banner 4-17

Operating Notes 4-19

CLI Control and Editing 4-21

Overview

The CLI is a text-based command interface for configuring and monitoring the switch. The CLI gives you access to the switch's full set of commands while providing the same password protection that is used in the web browser interface and the menu interface.

Accessing the CLI

Like the menu interface, the CLI is accessed through the switch console, and in the switch's factory default state, is the default interface when you start a console session. You can access the console out-of-band by directly connecting a terminal device to the switch, or in-band by using Telnet either from a terminal device or through the web browser interface.

Also, if you are using the menu interface, you can access the CLI by selecting the **Command Line (CLI)** option in the Main Menu.

Using the CLI

The CLI offers these privilege levels to help protect the switch from unauthorized access:

1. Operator
2. Manager
3. Global Configuration
4. Context Configuration

Note

CLI commands are not case-sensitive.

When you use the CLI to make a configuration change, the switch writes the change to the Running-Config file in volatile memory. This allows you to test your configuration changes before making them permanent. To make changes permanent, you must use the **write memory** command to save them to the Startup-Config file in non-volatile memory. If you reboot the switch without first using **write memory**, all changes made since the last reboot or **write memory** (whichever is later) will be lost. For more on switch memory and saving configuration changes, see Chapter 6, "Switch Memory and Configuration".

Privilege Levels at Logon

Privilege levels control the type of access to the CLI. To implement this control, you must set at least a Manager password. *Without a Manager password configured, anyone having serial port, Telnet, or web browser access to the switch can reach all CLI levels*. (For more on setting passwords, refer to the chapter on usernames and passwords in the *Access Security Guide* for your switch.)

When you use the CLI to log on to the switch, and passwords are set, you will be prompted to enter a password. For example:

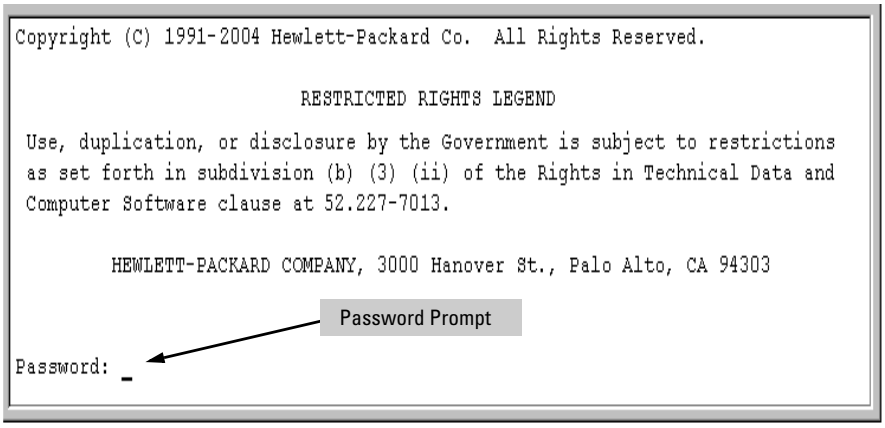

Figure 4-1. Example of CLI Log-On Screen with Password(s) Set

In the above case, you will enter the CLI at the level corresponding to the password you provide (operator or manager).

If no passwords are set when you log onto the CLI, you will enter at the Manager level. For example:

```
ProCurve# _
```

Caution

ProCurve strongly recommends that you configure a Manager password. If a Manager password is not configured, then the Manager level is not password-protected, and anyone having in-band or out-of-band access to the switch may be able to reach the Manager level and compromise switch and network security. Note that configuring only an Operator password *does not* prevent access to the Manager level by intruders who have the Operator password.

Pressing the Clear button on the front of the switch removes password protection. *For this reason, it is recommended that you protect the switch from physical access by unauthorized persons*. If you are concerned about switch security and operation, you should install the switch in a secure location, such as a locked wiring closet.

Privilege Level Operation

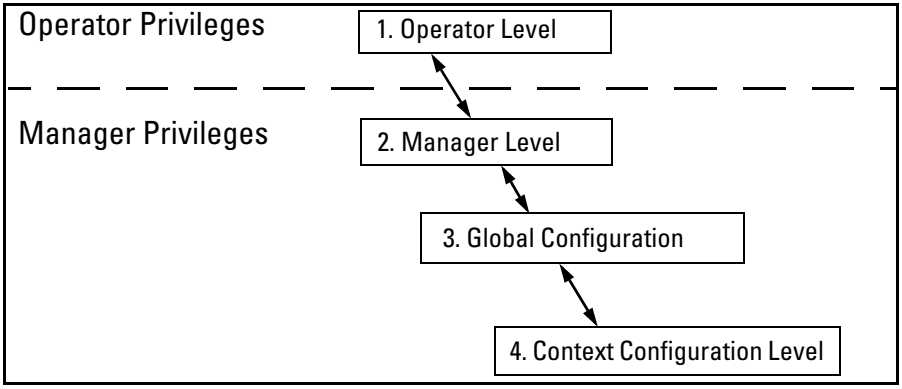

Figure 4-2. Access Sequence for Privilege Levels

Operator Privileges

At the Operator level you can examine the current configuration and move between interfaces without being able to change the configuration. A “>” character delimits the Operator-level prompt. For example:

`ProCurve> _` (*Example of the Operator prompt.*)

When using **enable** to move to the Manager level, the switch prompts you for the Manager password if one has already been configured.

Manager Privileges

Manager privileges give you three additional levels of access: Manager, Global Configuration, and Context Configuration. (See figure.) A "`#`" character delimits any Manager prompt. For example:

`ProCurve#_` *Example of the Manager prompt.*

- **Manager level**: Provides all Operator level privileges plus the ability to perform system-level actions that do not require saving changes to the system configuration file. The prompt for the Manager level contains only the system name and the "`#`" delimiter, as shown above. To select this level, enter the **enable** command at the Operator prompt and enter the Manager password, when prompted. For example:

  `ProCurve> enable` *Enter enable at the Operator prompt.*
  `Password:` *CLI prompt for the Manager password.*
  `ProCurve# _` *The Manager prompt appears after the correct Manager password is entered.*

- **Global Configuration level:** Provides all Operator and Manager level privileges, and enables you to make configuration changes to any of the switch's software features. The prompt for the Global Configuration level includes the system name and "`(config)`". To select this level, enter the **config** command at the Manager prompt. For example:

  `HPswitch# config` *Enter* **config** *at the Manager prompt.*
  `HPswitch(config)#_` *The Global Config prompt.*

- **Context Configuration level:** Provides all Operator and Manager privileges, and enables you to make configuration changes in a specific context, such as one or more ports or a VLAN. The prompt for the Context Configuration level includes the system name and the selected context. For example:

  `ProCurve(eth-1)#`

  `ProCurve(vlan-10)#`

  The Context level is useful, for example, for executing several commands directed at the same port or VLAN, or if you want to shorten the command strings for a specific context area. To select this level, enter the specific context at the Global Configuration level prompt. For example, to select the context level for an existing VLAN with the VLAN ID of 10, you would enter the following command and see the indicated result:

  `ProCurve(config)# vlan 10`

  `ProCurve(vlan-10)#`

Table 4-1. Privilege Level Hierarchy

Privilege Level	Example of Prompt and Permitted Operations		
Operator Privilege			
Operator Level	`ProCurve>`	show < *command* > setup	View status and configuration information.
		ping < *argument* > link-test < *argument* >	Perform connectivity tests.
		enable	Move from the Operator level to the Manager level.
		menu	Move from the CLI interface to the menu interface.
		logout	Exit from the CLI interface and terminate the console session.
		exit	Terminate the current session (same as logout).
Manager Privilege			
Manager Level	`ProCurve#`		Perform system-level actions such as system control, monitoring, and diagnostic commands, plus any of the Operator-level commands. For a list of available commands, enter **?** at the prompt.
Global Configuration Level	`ProCurve(config)#`		Execute configuration commands, plus all Operator and Manager commands. For a list of available commands, enter **?** at the prompt.
Context Configuration Level	`ProCurve(eth-5)#` `ProCurve(vlan-100)#`		Execute context-specific configuration commands, such as a particular VLAN or switch port. This is useful for shortening the command strings you type, and for entering a series of commands for the same context. For a list of available commands, enter **?** at the prompt.

How To Move Between Levels

Change in Levels	Example of Prompt, Command, and Result

Operator level
to
Manager level
	`ProCurve> enable`
	`Password:_`
	After you enter **enable**, the Password prompt appears. After you enter the Manager password, the system prompt appears with the # symbol:
	`ProCurve#_`

Manager level *to* Global configuration level	`ProCurve# config` `ProCurve(config)#`
Global configuration level *to a* Context configuration level	`ProCurve(config)# vlan 10` `ProCurve(vlan-10)#`

Context configuration level
to another
Context configuration level
	`ProCurve(vlan-10)# interface e 3`
	`ProCurve(int-3)#`
	The CLI accepts "`e`" as the abbreviated form of "`ethernet`".

Move from any level to the preceding level	`ProCurve(int-3)# exit`
	`ProCurve(config)# exit`
	`ProCurve# exit`
	`ProCurve>`

Move from any level to the Manager level	`ProCurve(int-3)# end`
	`ProCurve#`
	—or—
	`ProCurve(config)# end`
	`ProCurve#`

Moving Between the CLI and the Menu Interface. When moving between interfaces, the switch retains the current privilege level (Manager or Operator). That is, if you are at the Operator level in the menu and select the **Command Line Interface (CLI)** option from the Main Menu, the CLI prompt appears at the Operator level.

Changing Parameter Settings. Regardless of which interface is used (CLI, menu interface, or web browser interface), the most recently configured version of a parameter setting overrides any earlier settings for that parameter.

For example, if you use the menu interface to configure an IP address of "*X*" for VLAN 1 and later use the CLI to configure a different IP address of "*Y*" for VLAN 1, then "*Y*" replaces "*X*" as the IP address for VLAN 1 in the running-config file. If you subsequently execute **write memory** in the CLI, then the switch also stores "*Y*" as the IP address for VLAN 1 in the startup-config file. (For more on the startup-config and running config files, see Chapter 6, "Switch Memory and Configuration".)

Listing Commands and Command Options

At any privilege level you can:

- List all of the commands available at that level
- List the options for a specific command

Listing Commands Available at Any Privilege Level

At a given privilege level you can list and execute the commands that level offers, plus all of the commands available at preceding levels. For example, at the Operator level, you can list and execute only the Operator level commands. However, at the Manager level, you can list and execute the commands available at both the Operator and Manager levels.

Type "?" To List Available Commands. 1.Typing the **?** symbol lists the commands you can execute at the current privilege level. For example, typing **?** at the Operator level produces this listing:

```
ProCurve> ?

 enable
 exit
 link-test
 logout
 menu
 ping
 show
 traceroute
HPswitch>
```

Figure 4-3. Example of the Operator Level Command Listing

Typing **?** at the Manager level produces this listing:

```
ProCurve# ?
 boot                    Reboot the device.
 clear                   Clear table/statistics or authorized client public
                         keys.
 configure               Enter the Configuration context.
 copy                    Copy datafiles to/from the switch.
 debug                   Enable/disable debug logging.
 display                 Display the running/saved configuration.
 end                     Return to the Manager Exec context.
 erase                   Erase the configuration file stored in flash or.
 getMIB                  Retrieve and display the value of the MIB objects
                         specified.
 kill                    Kill other active console, telnet, or ssh sessions.
 log                     Display log events.
 page                    Toggle paging mode.
 print                   Execute a command and redirect its output to the device
                         channel for current session.
 redo                    Re-execute a command from history.
 reload                  Warm reboot of the switch.
 repeat                  Repeat execution of a previous command.
 setMIB                  Set the value of a MIB object.
 setup                   Enter the 'Switch Setup' screen for basic switch
                         configuration.
-- MORE --, next page: Space, next line: Enter, quit: Control-C
```

When - - MORE - - appears, use the Space bar or **[Return]** to list additional commands.

Figure 4-4.Example of the Manager-Level Command Listing

When **- - MORE - -** appears, there are more commands in the listing. To list the next screenfull of commands, press the Space bar. To list the remaining commands one-by-one, repeatedly press **[Enter]**.

Typing **?** at the Global Configuration level or the Context Configuration level produces similar results.

Use [Tab] To Search for or Complete a Command Word. You can use **[Tab]** to help you find CLI commands or to quickly complete the current word in a command. To do so, type one or more consecutive characters in a command and then press **[Tab]** (with no spaces allowed). For example, at the Global Configuration level, if you press **[Tab]** immediately after typing "**t**", the CLI displays the available command options that begin with "t". For example:

```
ProCurve(config)# t [Tab]
tacacs-server
telnet-server
time
timesync
trunk
telnet
terminal
traceroute
ProCurve(config)# t
```

As mentioned above, if you type part of a command word and press **[Tab]**, the CLI completes the current word (if you have typed enough of the word for the CLI to distinguish it from other possibilities), including hyphenated extensions. For example:

```
ProCurve(config)# port-[Tab]
ProCurve(config)# port-security _
```

Pressing **[Tab]** after a completed command word lists the further options for that command.

```
ProCurve(config)# qos [Tab]

 udp-portSet UDP port based priority.
 tcp-portSet TCP port based priority.
 device-priorityConfigure device-based priority.
 dscp-mapDefine mapping between a DSCP
   (Differentiated-Services Codepoint)
   value and 802.1p priority.
  type-of-serviceConfigure the Type-of-Service
   method the device uses to
   prioritize IP traffic.
```

Listing Command Options

You can use the CLI to remind you of the options available for a command by entering command keywords followed by **?**. For example, suppose you want to see the command options for configuring the console settings:

This example displays the command options for configuring the switch's console settings.

```
ProCurve(config)# console
 baud-rate            Set the data transmission speed for the device connect
                      sessions initiated through the Console port.
 events               Set level of the events displayed in the device's Events
                      Log.
 flow-control         Set the Flow Control Method; default is xon-xoff.
 inactivity-timer     Set the number of minutes of no activity detected on the
                      Console port before the switch terminates a
                      communication session.
 screen-refresh       Set default number of seconds before screen is refreshed
                      on the repeat command.
 terminal             Set type of terminal being used (default is vt100).
```

Figure 4-5. Example of How To List the Options for a Specific Command

Displaying CLI "Help"

CLI Help provides two types of context-sensitive information:

- Command list with a brief summary of each command's purpose
- Detailed information on how to use individual commands

Displaying Command-List Help.

Syntax: help

Displays a listing of command Help summaries for all commands available at the current privilege level. That is, at the Operator level, executing ***help*** *displays the Help summaries only for Operator-Level commands. At the Manager level, executing* ***help*** *displays the Help summaries for both the Operator and Manager levels, and so on.*

For example, to list the Operator-Level commands with their purposes:

```
ProCurve> help

 enable                  Enter the Manager Exec context.
 exit                    Return to the previous context or terminate current
                         console/telnet session if you are in the Operator
                         context level.
 link-test               Test the connection to a MAC address on the LAN.
 logout                  Terminate this console/telnet session.
 menu                    Change console user interface to menu system.
 ping                    Send IP Ping requests to a device on the network.
 show                    Display switch operation information.
 traceroute              Send traceroute to a device on the network.
```

Figure 4-6. Example of Context-Sensitive Command-List Help

Displaying Help for an Individual Command.

Syntax: *< command-string >* help

This option displays Help for any command available at the current context level.

For example, to list the Help for the **interface** command in the Global Configuration privilege level:

```
ProCurve(config)# interface help
Usage: [no] interface [ethernet] PORT-LIST [...]

Description: Enter the Interface Configuration Level, or execute one
             command for that level. Without optional parameters
             specified, the 'interface' command changes the context to
             the Interface Configuration Context Level for execution of
             configuration changes to the port or ports in the PORT-LIST.
             The 'interface [ethernet] PORT-LIST' can be followed by any
             command from the Interface Configuration Context Level in the
             same command line. In this case the context level is not
             changed, but the command is also executed for the port or ports
             in the PORT-LIST. Use 'interface [ethernet] PORT-LIST ?'
             to get a list of all valid commands.
```

Figure 4-7.Example of How To Display Help for a Specific Command

Note that trying to list the help for an individual command from a privilege level that does not include that command results in an error message. For example, trying to list the help for the **interface** command while at the global configuration level produces this result:

```
ProCurve# speed-duplex help
Invalid input: speed-duplex
```

Configuration Commands and the Context Configuration Modes

You can execute any configuration command in the global configuration mode or in selected context modes. However, using a context mode enables you to execute context-specific commands faster, with shorter command strings.

The switch offers interface (port or trunk group) and VLAN context configuration modes:

Port or Trunk-Group Context . Includes port- or trunk-specific commands that apply only to the selected port(s) or trunk group, plus the global configuration, Manager, and Operator commands. The prompt for this mode includes the identity of the selected port(s):

```
ProCurve(config)# interface c3-c6
ProCurve(eth-C5-C8)#

ProCurve(config)# interface trk1
ProCurve(eth-Trk1)#
```

Commands executed at configuration level for entering port and **trk1** *static trunk-group contexts, and resulting prompts showing port or static trunk contexts..*

```
ProCurve(eth-C5-C8)#
ProCurve(eth-Trk1)#
```

```
ProCurve(eth-C5-C8)# ?
ProCurve(eth-C5-C8)# ?
```

Lists the commands you can use in the port or static trunk context, plus the Manager, Operator, and context commands you can execute at this level.

In the port context, the first block of commands in the "?" listing show the context-specific commands that will affect only ports C3-C6.

```
ProCurve(eth-3-6)# ?
 broadcast-limit        Set a broadcast traffic percentage limit.
 disable                Disable port(s).
 enable                 Enable port(s).
 flow-control           Enable/disable flow control on the port(s).
 gvrp                   Set the GVRP timers on the port (hundreths of a
                        second).
 lacp                   Define whether LACP is enabled on the port, and whether
                        it is in active or passive mode when enabled.
 mdix-mode              Set port MDI/MDIX mode (default: auto).
 monitor                Define either the port is to be monitored or not.
 name                   Set/unset a name for the port(s).
 qos                    Set port-based priority.
 rate-limit             Enable/disable and configure rate-limiting for incoming
                        traffic on the port(s).
 speed-duplex           Define mode of operation for the port(s).
 unknown-vlans          Configure GVRP on the port(s).

 interface              Enter the Interface Configuration Level, or execute one
                        command for that level.
 vlan                   Add, delete, edit VLAN configuration or enter a VLAN
                        context.

 -- MORE --, next page: Space, next line: Enter, quit: Control-C
```

The remaining commands in the listing are Manager, Operator, and context commands.

Figure 4-8. Context-Specific Commands Affecting Port Context

VLAN Context . Includes VLAN-specific commands that apply only to the selected VLAN, plus Manager and Operator commands. The prompt for this mode includes the VLAN ID of the selected VLAN. For example, if you had already configured a VLAN with an ID of 100 in the switch:

```
ProCurve(config)# vlan 100
```

Command executed at configuration level to enter VLAN 100 context.

```
ProCurve(vlan-100)#
```

Resulting prompt showing VLAN 100 context.

```
ProCurve(vlan-100)# ?
```

Lists commands you can use in the VLAN context, plus Manager, Operator, and context commands you can execute at this level.

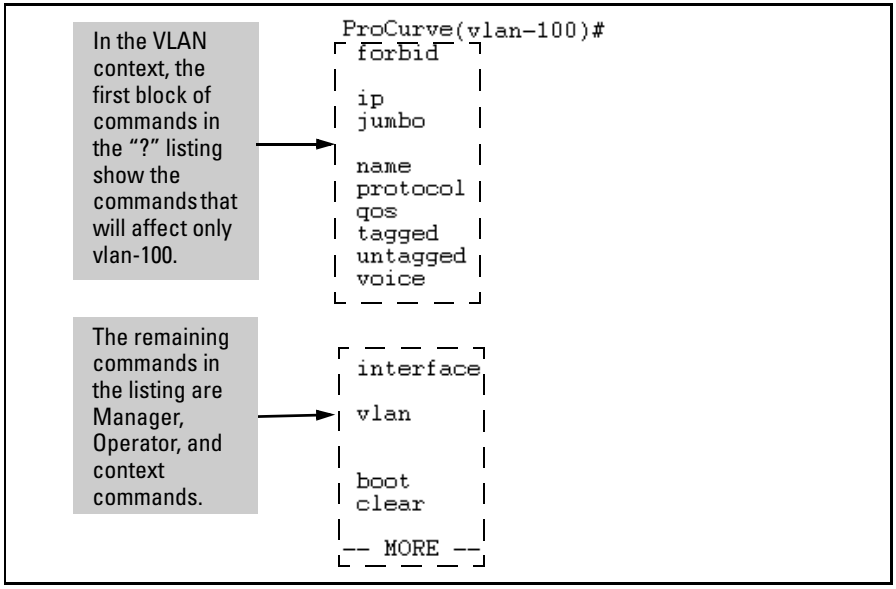

Figure 4-9. Context-Specific Commands Affecting VLAN Context

Configuring Custom Login Banners for the Console and Web Browser Interfaces

You can now configure the switch to display a login banner of up to 320 characters when an operator initiates a management session with the switch through any of the following methods:

- Telnet
- serial connection
- SSHv2 (SSHv1 does not include support for banners.)
- Web browser

In the factory default configuration, the switch displays the following default banner:

```
                        RESTRICTED RIGHTS LEGEND

 Use, duplication, or disclosure by the Government is subject to restrictions
 as set forth in subdivision (b) (3) (ii) of the Rights in Technical Data and
 Computer Software clause at 52.227-7013.

         HEWLETT-PACKARD COMPANY, 3000 Hanover St., Palo Alto, CA 94303

 We'd like to keep you up to date about:
   * Software feature updates
   * New product announcements
   * Special events

 Please register your products now at:  www.ProCurve.com


 Password: ▌
```

Default banner appearing with software release E.10.02 and greater.

Figure 4-10. The Default Login Banner

Note The switch's Web browser interface does not display the default banner.

Banner Operation with Telnet, Serial, or SSHv2 Access

When a system operator begins a login session, the switch displays the banner above the local password prompt or, if no password is configured, above the **Press any key to continue prompt.** Entering a correct password or, if no password is configured, pressing any key clears the banner from the CLI and displays the CLI prompt. (Refer to figure<zBlue> 4-10 on page 4-15.)

Banner Operation with Web Browser Access

When a system operator uses a Web browser to access the switch, the text of a non-default banner configured on the switch appears in a dedicated banner window with a link to the Web agent home page. Clicking on **To Home Page** clears the banner window and prompts the user for a password (if configured). Following entry of the correct username/password information (or if no username/password is required), the switch then displays either the Registration page or the switch's home page. Note that if the banner feature is disabled or if the switch is using the factory-default banner shown in figure <zBlue> 4-10, then the banner page does not appear in the Web browser when an operator initiates a login session with the switch.

Configuring and Displaying a Non-Default Banner

You can enable or disable banner operation using either the switch's CLI or an SNMP application. The steps include:

1. Enable non-default banner operation and define the endpoint delimiter for the banner.
2. Enter the desired banner text, including any specific line breaks you want.
3. Enter the endpoint delimiter.
4. Use **show banner motd** to display the current banner status.

Syntax: banner motd < *delimiter* >
no banner motd

This command defines the single character used to terminate the banner text and enables banner text input. You can use any character except a blank space as a delimiter. The **no** form of the command disables the login banner feature.

< banner-text-string >

*The switch allows up to 320 banner characters, including blank spaces and CR-LF (***[Enter]***). (The tilde "* **~***" and the delimiter defined by* **banner motd <*delimiter*>** *are not allowed as part of the banner text.) While entering banner text, you can backspace to edit the current line (that is, a line that has not been terminated by a CR-LF.) However, terminating a line in a banner by entering a CR-LF prevents any further editing of that line. To edit a line in a banner entry after terminating the line with a CR-LF requires entering the delimiter described above and then reconfiguring new banner text.*

The banner text string must terminate with the character defined by banner motd < delimiter >.

Example of Configuring and Displaying a Banner

Suppose a system operator wanted to configure the following banner message on her company's 5300xl switches:

```
This is a private system maintained by the
        Allied Widget Corporation.
Unauthorized use of this system can result in
        civil and criminal penalties!
```

In this case, the operator will use the [Enter] key to create line breaks, blank spaces for line centering, and the **%** symbol to terminate the banner message.

```
ProCurve(config)# banner motd %
Enter TEXT message.  End with the character'%'
     This is a private system maintained by the
              Allied Widget Corporation.
     Unauthorized use of this system can result in
             civil and criminal penalties!%
ProCurve(config)# write memory
```

Figure 4-11. Example of Configuring a Login Banner

To view the current banner configuration, use either the **show banner motd** or **show running** command.

```
ProCurve(config)# show banner motd

Banner Information

Banner status: Enabled
Configured Banner:

     This is a private system maintained by the
              Allied Widget Corporation.
     Unauthorized use of this system can result in
             civil and criminal penalties!
```

Figure 4-12. Example of show banner motd Output

```
ProCurve(config)# show running

Running configuration:

; J4850A Configuration Editor; Created on release #E.10.02

hostname "ProCurve"
module 1 type J8161A
module 2 type J8161A
snmp-server community "notpublic" Unrestricted
vlan 1
   name "DEFAULT_VLAN"
   untagged A1-A24,B1-B24
   ip address dhcp-bootp
   exit
banner motd "    This is a private system maintained by the
             Allied Widget Corporation.
    Unauthorized use of this system can result in
            civil and criminal penalties!"
password manager
password operator
```

Shows the current banner configuration.

Figure 4-13. The Current Banner Appears in the Switch's Running-Config File

The next time someone logs onto the switch's management CLI, the following appears:

```
Copyright (C) 1991-2005 Hewlett-Packard Co.  All Rights Reserved.

                         RESTRICTED RIGHTS LEGEND

 Use, duplication, or disclosure by the Government is subject to restrictions
 as set forth in subdivision (b) (3) (ii) of the Rights in Technical Data and
 Computer Software clause at 52.227-7013.

        HEWLETT-PACKARD COMPANY, 3000 Hanover St., Palo Alto, CA 94303
  This is a private system maintained by the
           Allied Widget Corporation.
  Unauthorized use of this system can result in
          civil and criminal penalties!

Password: ■
```

The login screen displays the configured banner.

Entering a correct password clears the banner and displays the CLI prompt.

Figure 4-14. Example of CLI Result of the Login Banner Configuration

If someone uses a Web browser to log in to the switch interface, the following message appears:

This is a private system maintained by the
Allied Widget Corporation.
Unauthorized use of this system can result in
civil and criminal penalties!

To Home Page

Figure 4-15. Example of Web Browser Interface Result of the Login Banner Configuration

Operating Notes

- The default banner appears only when the switch is in the factory default configuration. Using **no banner motd** deletes the currently configured banner text and blocks display of the default banner. The default banner is restored only if the switch is reset to its factory-default configuration.
- The switch supports one banner at any time. Configuring a new banner replaces any former banner configured on the switch.

- If the switch is configured with **ssh version 1** or **ssh version 1-or-2**, configuring the banner sets the SSH configuration to ssh version 2 and displays the following message in the CLI:

  ```
  Warning: SSH version has been set to v2.
  ```

- If a banner is configured, the switch does not allow configuration with **ssh version 1** or **ssh version 1-or-2.** Attempting to do so produces the following error message in the CLI:

  ```
  Banner has to be disabled first.
  ```

- If a banner is enabled on the switch, the Web browser interface displays the following link to the banner page:

  Notice to all users

CLI Control and Editing

Keystrokes	Function
[Ctrl] [A]	Jumps to the first character of the command line.
[Ctrl] [B] or ←	Moves the cursor back one character.
[Ctrl] [C]	Terminates a task and displays the command prompt.
[Ctrl] [D]	Deletes the character at the cursor.
[Ctrl] [E]	Jumps to the end of the current command line.
[Ctrl] [F] or →	Moves the cursor forward one character.
[Ctrl] [K]	Deletes from the cursor to the end of the command line.
[Ctrl] [L] or **[Ctrl] [R]**	Repeats current command line on a new line.
[Ctrl] [N] or ↓	Enters the next command line in the history buffer.
[Ctrl] [P] or ↑	Enters the previous command line in the history buffer.
[Ctrl] [U] or **[Ctrl] [X]**	Deletes from the cursor to the beginning of the command line.
[Ctrl] [W]	Deletes the last word typed.
[Esc] [B]	Moves the cursor backward one word.
[Esc] [D]	Deletes from the cursor to the end of the word.
[Esc] [F]	Moves the cursor forward one word.
[Backspace]	Deletes the first character to the left of the cursor in the command line.
[Spacebar]	Moves the cursor forward one character.

—This page is intentionally unused—

5

Using the Web Browser Interface

Contents

Overview 5-2

General Features 5-3

Starting an Web Browser Interface Session with the Switch 5-4

Using a Standalone Web Browser in a PC or UNIX Workstation 5-4

Using ProCurve Manager (PCM) or ProCurve Manager Plus (PCM+) 5-5

Tasks for Your First Web Browser Interface Session 5-7

Viewing the “First Time Install” Window 5-7

Security: Creating Usernames and Passwords in the Browser Interface 5-8

Entering a User Name and Password 5-10

Using a User Name 5-10

If You Lose the Password 5-10

Online Help for the Web Browser Interface 5-11

Support/Mgmt URLs Feature 5-12

Support URL 5-13

Help and the Management Server URL 5-13

Using the PCM Server for Switch Web HelpWeb Help 5-14

Status Reporting Features 5-16

The Overview Window 5-16

The Port Utilization and Status Displays 5-17

Port Utilization 5-17

Port Status 5-19

The Alert Log 5-20

Sorting the Alert Log Entries 5-20

Alert Types and Detailed Views 5-21

The Status Bar 5-22

Setting Fault Detection Policy 5-24

Overview

The web browser interface built into the switch lets you easily access the switch from a browser-based PC on your network. This lets you do the following:

- Optimize your network uptime by using the Alert Log and other diagnostic tools
- Make configuration changes to the switch
- Maintain security by configuring usernames and passwords

This chapter covers the following:

- General features (page 5-3).
- Starting a web browser interface session (page 5-4)
- Tasks for your first web browser interface session (page 5-7):
  - Creating usernames and passwords in the web browser interface (page 5-8)
  - Selecting the fault detection configuration for the Alert Log operation (page 5-24)
  - Getting access to online help for the web browser interface (page 5-11)
- Description of the web browser interface:
  - Overview window and tabs (page 5-16)
  - Port Utilization and Status displays (page 5-17)
  - Alert Log and Alert types (page 5-20)
  - Setting the Fault Detection Policy (page 5-24)

Note

You can disable access to the web browser interface by either executing **no web-management** at the Command Prompt or changing the **Web Agent Enabled** parameter setting to **No** (page 7-4).

General Features

The Web Browser Interface includes these features:

Switch Identity and Status:

- General system data
- Software version
- IP address
- Status Overview
- Port utilization
- Port counters
- Port status
- Alert log

Switch Configuration:

- Device view
- Port configuration
- VLAN configuration
- Fault detection
- Quality of service (QoS)
- Port monitoring (mirroring)
- System information
- IP configuration
- Support and management server URLs
- Device features (Spanning Tree On/Off, VLAN selection, and IGMP)
- Stacking (3400cl, 6400cl and 4200vl switches)

Switch Security:

- User names and passwords
- Authorized Addresses
- Intrusion Log
- SSL
- RADIUS authentication (Refer to the *Access Security Guide*.)

Switch Diagnostics:

- Ping/Link Test
- Device reset
- Configuration report

Starting an Web Browser Interface Session with the Switch

You can start a web browser session in the following ways:

- Using a standalone web browser on a network connection from a PC or UNIX workstation:
  - Directly connected to your network
  - Connected through remote access to your network
- Using a network management station running ProCurve Manager on your network

Using a Standalone Web Browser in a PC or UNIX Workstation

This procedure assumes that you are using a compatible web browser and that the switch is configured with an IP address accessible from your PC or workstation. (For more on assigning an IP address, refer to "IP Configuration" on page 8-2.)

1. Ensure that the Java™ applets are enabled for your browser. For more information on this topic, refer to your browser's online Help.

2. Use the web browser to access the switch. If your network includes a Domain Name Server (DNS), your switch's IP address may have a name associated with it (for example, **switch5308**) that you can type in the **Location or Address** field instead of the IP address. Using DNS names typically improves browser performance. Contact your network administrator to enquire about DNS names associated with your ProCurve switch.

   Type the IP address (or DNS name) of the switch in the browser **Location** or **Address** (URL) field and press **[Enter]**. (It is not necessary to include **http://**.)

   switch5308 **[Enter]** (example of a DNS-type name)

   10.11.12.195 **[Enter]** (example of an IP address)

Using ProCurve Manager (PCM) or ProCurve Manager Plus (PCM+)

ProCurve Manager and ProCurve Manager Plus are designed for installation on a network management workstation. For this reason, the system requirements are different from the system requirements for accessing the switch's web browser interface from a non-management PC or workstation. For PCM and PCM+ requirements, refer to the information provided with the software.

This procedure assumes that:

- You have installed the recommended web browser on a PC or workstation that serves as your network management station.
- The networked device you want to access has been assigned an IP address and (optionally) a DNS name, and has been discovered by PCM or PCM+. (For more on assigning an IP address, refer to "IP Configuration" on page 8-2.)

To establish a web browser session with PCM or PCM+ running, do the following on the network management station:

1. Make sure the Java™ applets are enabled for your web browser. If they are not, refer to the web browser online Help for specific information on enabling the Java applets.
2. In the **Interconnected Devices** listing under **Network Manager Home** (in the PCM/PCM+ sidebar), right-click on the model number of the device you want to access.
3. The web browser interface automatically starts with the Status Overview window displayed for the selected device, as shown in figure 5-1.

Note

If the Registration window appears, click on the **Status** tab.

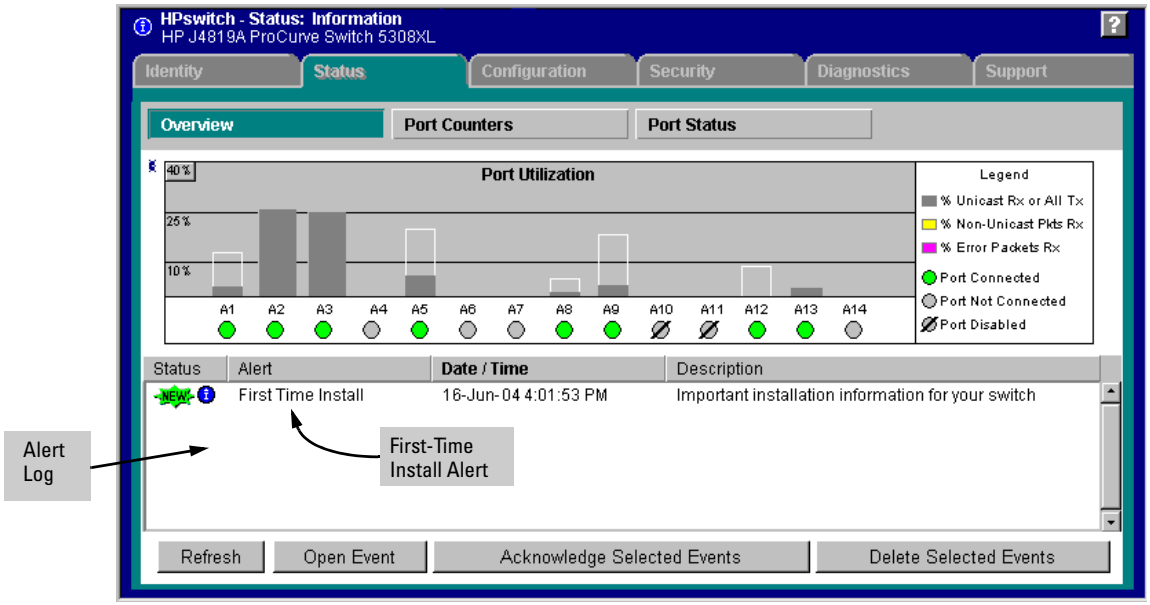

Figure 5-1. Example of Status Overview Screen

Tasks for Your First Web Browser Interface Session

The first time you access the web browser interface, there are three tasks you should perform:

- Review the “First Time Install” window
- Set Manager and Operator passwords
- Set access to the web browser interface online help

Viewing the “First Time Install” Window

When you access the switch’s web browser interface for the first time, the Alert log contains a “First Time Install” alert, as shown in figure 5-2. This gives you information about first time installations, and provides an immediate opportunity to set passwords for security and to specify a Fault Detection policy, which determines the types of messages that will be displayed in the Alert Log.

Double click on **First Time Install** in the Alert log (figure 5-1 on page 5-6). The web browser interface then displays the “First Time Install” window, below.

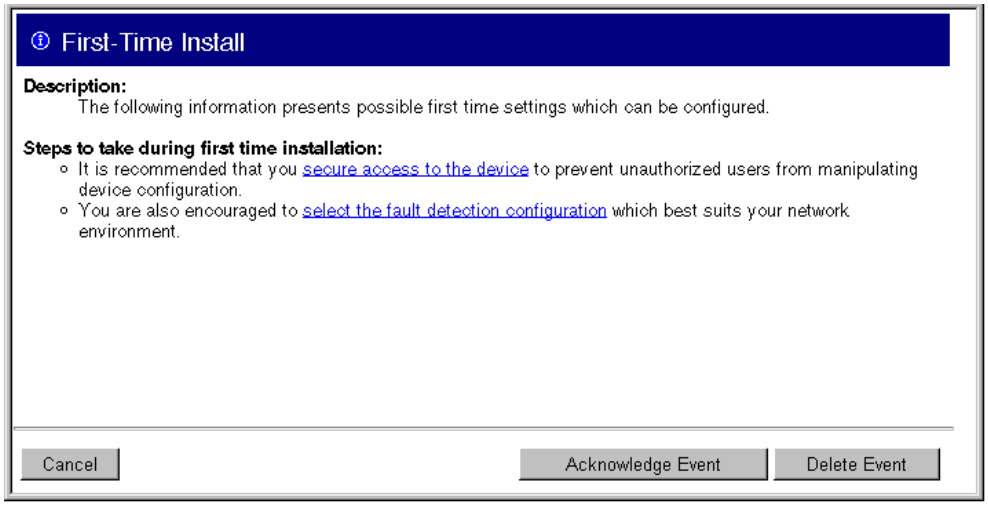

Figure 5-2. First-Time Install Window

This window is the launching point for the basic configuration you need to perform to set web browser interface passwords for maintaining security and a fault detection policy, which determines the types of messages that the Alert Log displays.

To set web browser interface passwords, click on **secure access to the device** to display the Device Passwords screen, and then go to the next page. (You can also access the password screen by clicking on the **Security** tab.)

To set Fault Detection policy, click on **select the fault detection configuration** in the second bullet in the window and go to the section, "Setting Fault Detection Policy" on page 5-24. (You can also access the password screen by clicking on the **Configuration** tab, and then the **[Fault Detection]** key.)

Security: Creating Usernames and Passwords in the Browser Interface

Note

On 5300xl switches running software release E.09.*xx*, you can also configure RADIUS authentication for web browser interface access. For more information, refer to the chapter titled "RADIUS Authentication and Accounting" in the *Access Security Guide* for your switch.

You may want to create both a username and a password to create access security for your switch. There are two levels of access to the interface that can be controlled by setting user names and passwords:

- **Operator Setting.** An Operator-level user name and password allows read-only access to most of the web browser interface, but prevents access to the Security window.
- **Manager Setting.** A Manager-level user name and password allows full read/write access to the web browser interface.

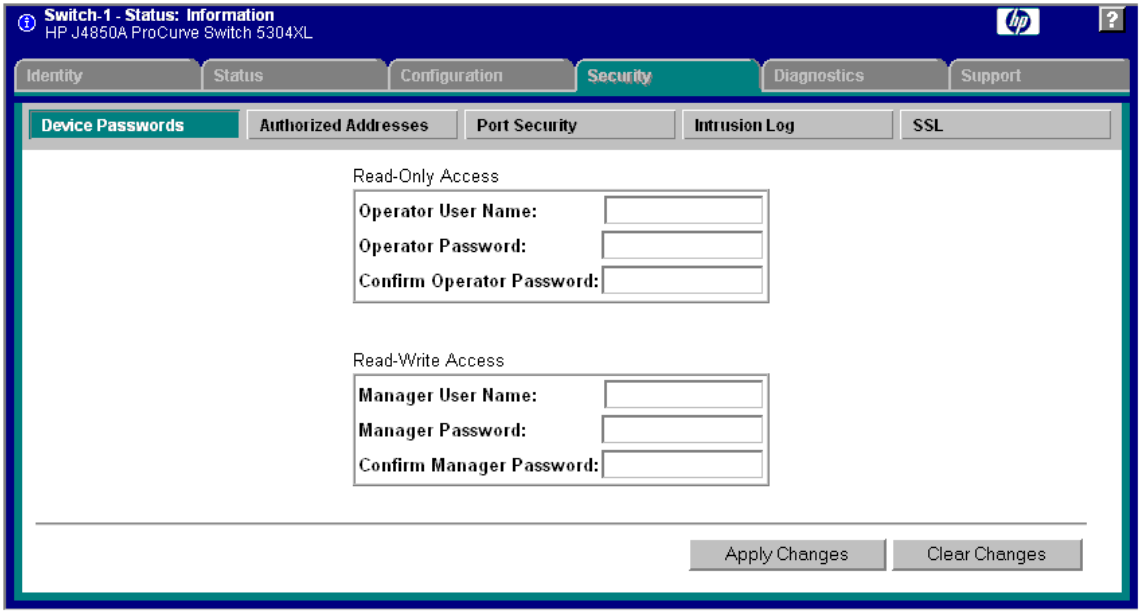

Figure 5-3. The Device Passwords Window

To set the passwords:

1. Access the Device Passwords screen by one of the following methods:
   - If the Alert Log includes a “First Time Install” event entry, double click on this event, then, in the resulting display, click on the **secure access to the device** link.
   - Select the **Security** tab.
2. Click in the appropriate box in the **Device Passwords** window and enter user names and passwords. You will be required to repeat the password strings in the confirmation boxes.

   Both the user names and passwords can be up to 16 printable ASCII characters.
3. Click on **[Apply Changes]** to activate the user names and passwords.

Note

Passwords you assign in the web browser interface will overwrite previous passwords assigned in either the web browser interface, the CLI, or the menu interface. That is, the most recently assigned passwords are the switch’s passwords, regardless of which interface was used to assign the string.

Entering a User Name and Password

Figure 5-4. Example of the Password Prompt in the Web Browser Interface

The manager and operator passwords are used to control access to all switch interfaces. Once set, you will be prompted to supply the password every time you try to access the switch through any of its interfaces. The password you enter determines the capability you have during that session:

- Entering the manager password gives you full read/write/troubleshooting capabilities
- Entering the operator password gives you read and limited trouble-shooting capabilities.

Using a User Name

If you also set user names in the web browser interface screen, you must supply the correct user name for web browser interface access. If a user name has not been set, then leave the User Name field in the password window blank.

Note that the Command Prompt and switch console interfaces use only the password, and do not prompt you for the User Name.

If You Lose the Password

If you lose the passwords, you can clear them by pressing the Clear button on the front of the switch. *This action deletes all password and user name protection from all of the switch's interfaces.*

The Clear button is provided for your convenience, but its presence means that if you are concerned with the security of the switch configuration and operation, you should make sure the switch is installed in a secure location, such as a locked wiring closet. (For more information, refer to "Front Panel Security" in the chapter titled "Configuring Username and Password Security" in the Access Security Guide for your switch.)

Online Help for the Web Browser Interface

Online Help is available for the web browser interface. You can use it by clicking on the question mark button in the upper right corner of any of the web browser interface screens.

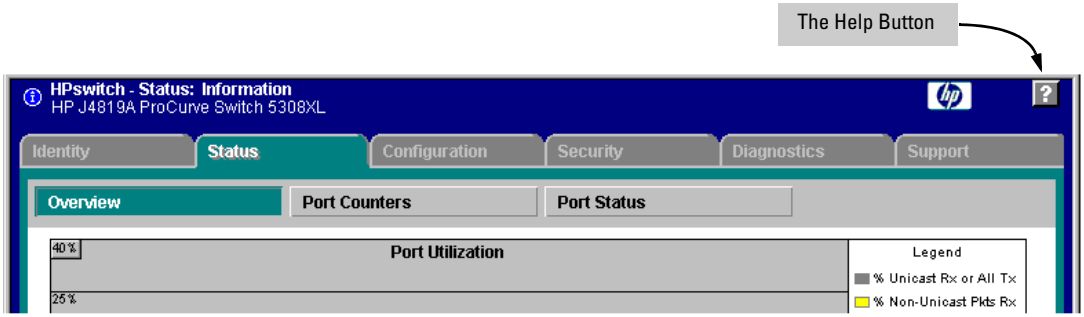

Figure 5-5. The Help Button

Context-sensitive help is provided for the screen you are on.

Note

To access the online Help for the web browser interface, you need either ProCurve Manager (version 1.5 or greater) installed on your network or an active connection to the World Wide Web. Otherwise, Online help for the web browser interface will not be available.

For more on Help access and operation, refer to "Help and the Management Server URL" on page 5-13.

Support/Mgmt URLs Feature

The Support/Mgmt URLs window enables you to change the World Wide Web Universal Resource Locator (URL) for two functions:

- **Support URL** – A support information site for your switch
- **Management Server URL** – The web site for web browser online Help

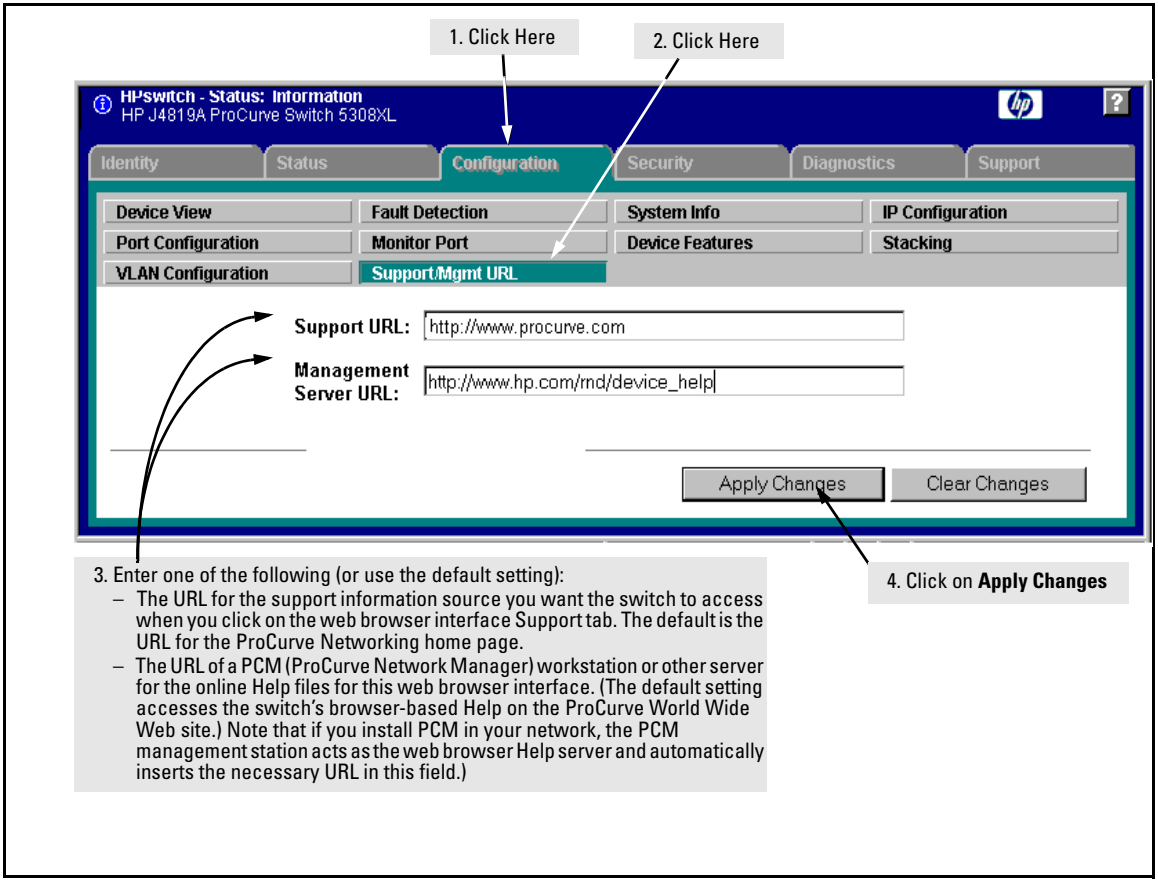

Figure 5-6. The Default Support/Mgmt URLs Window

Support URL

This is the site the switch accesses when you click on the **Support** tab on the web browser interface. The default URL is:

www.procurve.com

which is the World Wide Web site for ProCurve networking products. Click on **technical support** on that page to get support information regarding your switch, including white papers, software updates, and more.

As an alternative, you can replace the ProCurve URL with the URL for a local site used for logging reports on network performance or other support activities.

Help and the Management Server URL

The **Management Server URL** field specifies the URL the switch uses to find online Help for the web browser interface.

- If you install PCM (ProCurve Manager) in your network, the PCM management station acts as the web browser Help server for the switch and automatically inserts the necessary URL in this field.)
- In the default configuration (and if PCM is not running on your network) this field is set to the URL for accessing online Help from the ProCurve Networking web site:

  www.hp.com/rnd/device_help

  Using this option, the Help files are automatically available if your workstation can access the World Wide Web. In this case, if Online Help fails to operate, ensure that the above URL appears in the **Management Server URL** field shown in figure 5-7:

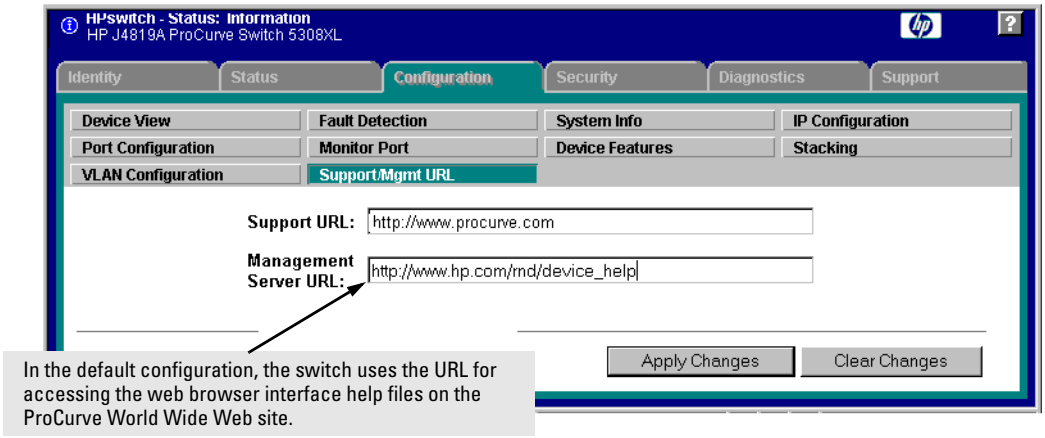

In the default configuration, the switch uses the URL for accessing the web browser interface help files on the ProCurve World Wide Web site.

Figure 5-7. How To Access Web Browser Interface Online Help

Using the PCM Server for Switch Web Help

For ProCurve devices that support the “Web Help” feature, you can use the PCM server to host the switch help files for devices that do not have HTTP access to the ProCurve Support Web site.

1. Go to the ProCurve Support web site to get the Device Help files:

   www.hp.com//rnd/device_help/

2. Copy the Web help files to the PCM server, under:

   C:\\program files\hewlett-packard\pnm\server\webroot\rnd\sevice_help\help\hpwnd\webhelp

3. Add an entry, or edit the existing entry in the Discovery portion of the global properties (globalprops.prp) in PCM to redirect the switches to the help files on the PCM server. For example:

```
Global {
TempDir=data/temp
...
  Discovery{
  ...
  ...
   DeviceHelpUrlRedirect=http://15.29.37.12.8040/rnd/device_help
      ...
 }
```

}

You will enter the IP address for your PCM server. 8040 is the standard port number to use.

4. Restart the Discovery process for the change to be applied.

Note

Changing the Discovery's Global properties file will redirect the Device Help URL for all devices.

If you just want to change the Device Help URL for a particular device, then go to the Configuration tab on the Web UI for that device and select the "Support/Mgmt URL" button. Edit the entry in the "Management Server URL" field for the device to point to the PCM server; for example:

http://15.29.37.12.8040/rnd/device_help

Status Reporting Features

Browser elements covered in this section include:

- The Overview window (below)
- Port utilization and status (page 5-17)
- The Alert log (page 5-20)
- The Status bar (page 5-22)

The Overview Window

The Overview Window is the home screen for any entry into the web browser interface.The following figure identifies the various parts of the screen.

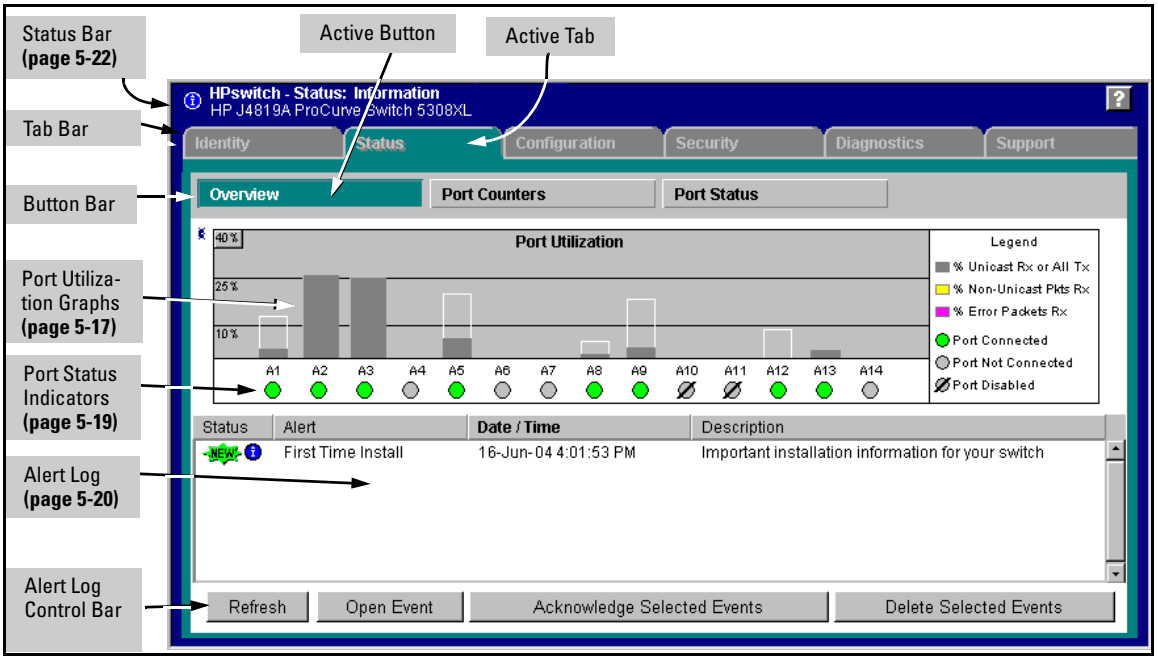

Figure 5-8. The Status Overview Window

Policy Management and Configuration. PCM can perform network-wide policy management and configuration of your switch. The Management Server URL field (page 5-13) shows the URL for the management station performing that function. For more information, refer to the documentation provided with the PCM software.

The Port Utilization and Status Displays

The Port Utilization and Status displays show an overview of the status of the switch and the amount of network activity on each port. The following figure shows a sample reading of the Port Utilization and Port Status.

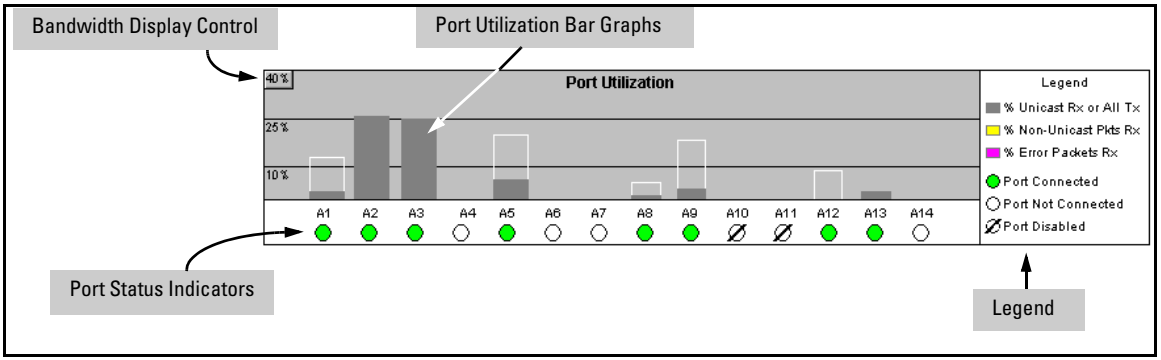

Figure 5-9. The Graphs Area

Port Utilization

The Port Utilization bar graphs show the network traffic on the port with a breakdown of the packet types that have been detected (unicast packets, non-unicast packets, and error packets). The Legend identifies traffic types and their associated colors on the bar graph:

- **% Unicast Rx & All Tx:** This is all unicast traffic received and all transmitted traffic of any type. This indicator (a blue color on many systems) can signify either transmitted or received traffic.
- **% Non-Unicast Pkts Rx:** All multicast and broadcast traffic received by the port. This indicator (a gold color on many systems) enables you to know “at-a-glance” the source of any non-unicast traffic that is causing high utilization of the switch. For example, if one port is receiving heavy broadcast or multicast traffic, all ports will become highly utilized. By color-coding the received broadcast and multicast utilization, the bar graph quickly and easily identifies the offending port. This makes it faster and easier to discover the exact source of the heavy traffic because you don’t have to examine port counter data from several ports.

- **% Error Pkts Rx**: All error packets received by the port. (This indicator is a reddish color on many systems.) Although errors received on a port are not propagated to the rest of the network, a consistently high number of errors on a specific port may indicate a problem on the device or network segment connected to the indicated port.
- **Maximum Activity Indicator:** As the bars in the graph area change height to reflect the level of network activity on the corresponding port, they leave an outline to identify the maximum activity level that has been observed on the port.

Utilization Guideline. A network utilization of 40% is considered the maximum that a typical Ethernet-type network can experience before encountering performance difficulties. If you observe utilization that is consistently higher than 40% on any port, click on the Port Counters button to get a detailed set of counters for the port.

To change the amount of bandwidth the Port Utilization bar graph shows. Click on the bandwidth display control button in the upper left corner of the graph. (The button shows the current scale setting, such as 40%.) In the resulting menu, select the bandwidth scale you want the graph to show (3%, 10%, 25%, 40%, 75%, or 100%), as shown in figure figure 5-10.

Note that when viewing activity on a gigabit port, you may want to select a lower value (such as 3% or 10%). This is because the bandwidth utilization of current network applications on gigabit links is typically minimal, and may not appear on the graph if the scale is set to show high bandwidth utilization.

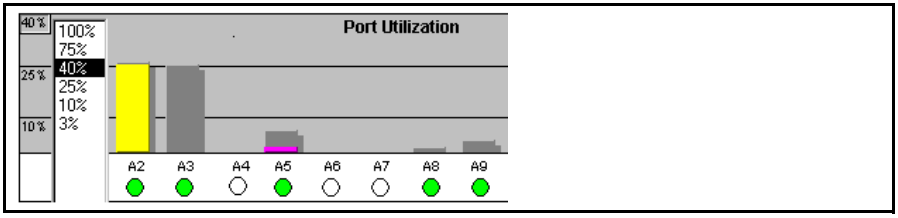

Figure 5-10. Changing the Graph Area Scale

To display values for each graph bar. Hold the mouse cursor over any of the bars in the graph, and a pop-up display is activated showing the port identification and numerical values for each of the sections of the bar, as shown in figure 5-11 (next).

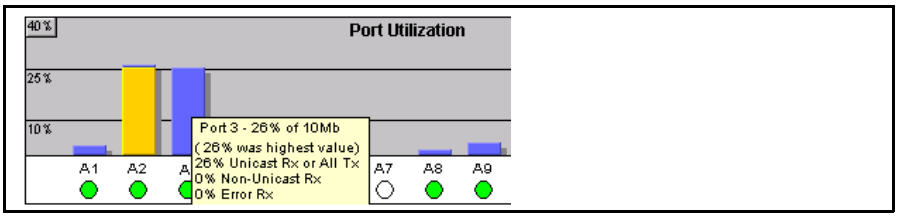

Figure 5-11. Display of Numerical Values for the Bar

Port Status

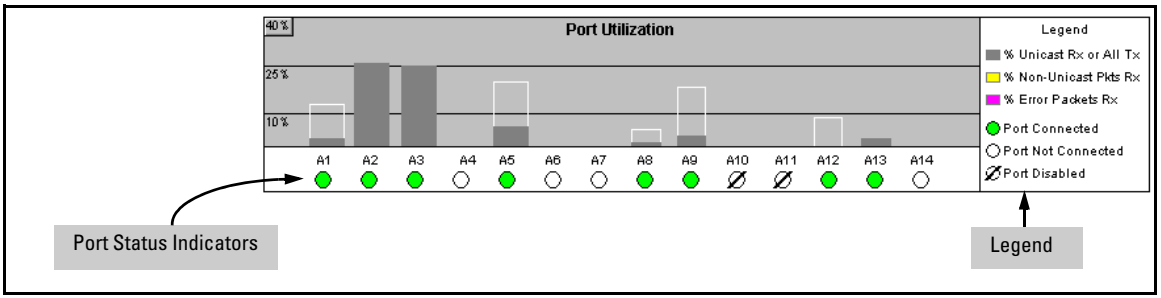

Figure 5-12. The Port Status Indicators and Legend

The Port Status indicators show a symbol for each port that indicates the general status of the port. There are four possible statuses:

- **Port Connected** – the port is enabled and is properly connected to an active network device.
- **Port Not Connected** – the port is enabled but is not connected to an active network device. A cable may not be connected to the port, or the device at the other end may be powered off or inoperable, or the cable or connected device could be faulty.
- **Port Disabled** – the port has been configured as disabled through the web browser interface, the switch console, or SNMP network management.
- **Port Fault-Disabled** – a fault condition has occurred on the port that has caused it to be auto-disabled. Note that the Port Fault-Disabled symbol will be displayed in the legend only if one or more of the ports is in that status. See appendix B, “Monitoring and Analyzing Switch Operation” for more information.

The Alert Log

The web browser interface Alert Log, shown in the lower half of the screen, shows a list of network occurrences, or *alerts*, that were detected by the switch. Typical alerts are **Broadcast Storm**, indicating an excessive number of broadcasts received on a port, and **Problem Cable**, indicating a faulty cable. A full list of alerts is shown in the table on page 5-21.

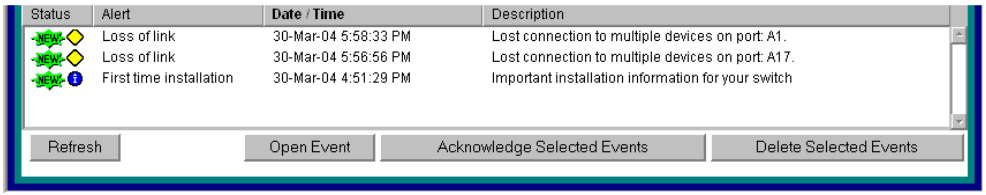

Figure 5-13. Example of the Alert Log

Each alert has the following fields of information:

- **Status** – The level of severity of the event generated. Severity levels can be Information, Normal, Warning, and Critical. If the alert is new (has not yet been acknowledged), the New symbol is also in the Status column.
- **Alert** – The specific event identification.
- **Date/Time** – The date and time the event was received by the web browser interface. This value is shown in the format: ***DD-MM-YY HH:MM:SS*** **AM/PM**, for example, **16-Sep-99 7:58:44 AM**.
- **Description** – A short narrative statement that describes the event. For example, **Excessive CRC/Alignment errors on port: 8**.

Sorting the Alert Log Entries

The alerts are sorted, by default, by the Date/Time field with the most recent alert listed at the top of the list. The second most recent alert is displayed below the top alert and so on. If alerts occurred at the same time, the simultaneous alerts are sorted by order in which they appear in the MIB.

Bold characters in a column heading indicate that the alert field alert log entries. You can sort by any of the other columns by clicking on the column heading. The **Alert** and **Description** columns are sorted alphabetically, while the **Status** column is sorted by severity type, with more critical severity indicators appearing above less critical indicators.

Alert Types and Detailed Views

As of April, 2004, the web browser interface generates the following alert types:

- Auto Partition
- Backup Transition
- Excessive broadcasts
- Excessive CRC/alignment errors
- Excessive jabbering
- Excessive late collisions
- First Time Install
- Full-Duplex Mismatch
- Half-Duplex Mismatch
- High collision or drop rate
- Loss of Link
- Mis-Configured SQE
- Network Loop
- Polarity Reversal
- Security Violation
- Stuck 10BaseT Port
- Too many undersized (runt)/giant packets
- Transceiver Hot Swap

Note

When troubleshooting the sources of alerts, it may be helpful to check the switch's Port Status and Port Counter windows, or use the CLI or menu interface to view the switch's Event Log.

When you double click on an Alert Entry, the web browser interface displays a separate window showing information about the event. This view includes a description of the problem and a possible solution. It also provides three management buttons:

- **Acknowledge Event** – removes the New symbol from the log entry
- **Delete Event** – removes the alert from the Alert Log
- **Cancel** – closes the detail view with no change to the status of the alert and returns you to the Overview screen.

For example, figure 5-14 shows a sample detail view describing an Excessive CRC/Alignment Error alert.

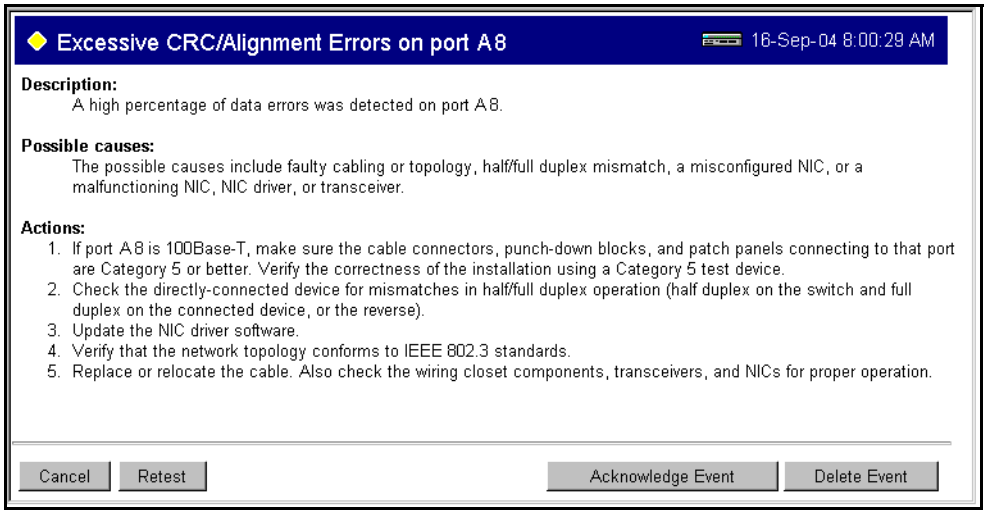

Figure 5-14.Example of Alert Log Detail View

The Status Bar

The Status Bar appears in the upper left corner of the web browser interface window. Figure 5-15 shows an expanded view of the status bar.

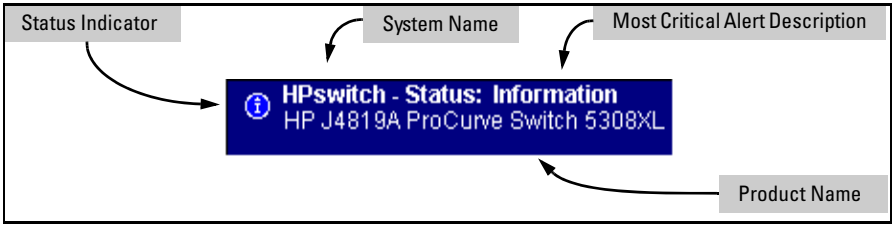

Figure 5-15. Example of the Status Bar

The Status bar includes four objects:

- **Status Indicator.** Indicates, by icon, the severity of the most critical alert in the current display of the Alert Log. This indicator can be one of four shapes and colors, as shown below.

Table 5-1. Status Indicator Key

Color	Switch Status	Status Indicator Shape
Blue	Normal Activity; “First time installation” information available in the Alert log.	
Green	Normal Activity	
Yellow	Warning	
Red	Critical	

- **System Name.** The name you can configure for the switch by using the **System Info** window (under the **Configuration** tab), the **hostname** < ***ascii-string*** > command in the CLI, or the **System Name** field in the "System Information" screen in the System Info screen of the menu interface.
- **Most Critical Alert Description.** A brief description of the earliest, unacknowledged alert with the current highest severity in the Alert Log, appearing in the right portion of the Status Bar. In instances where multiple critical alerts have the same severity level, only the earliest unacknowledged alert is deployed in the Status bar.
- **Product Name.** The product name of the switch to which you are connected in the current web browser interface session.

Setting Fault Detection Policy

One of the powerful features in the web browser interface is the Fault Detection facility. For your switch, this feature controls the types of alerts reported to the Alert Log based on their level of severity.

Set this policy in the Fault Detection window (figure 5-16).

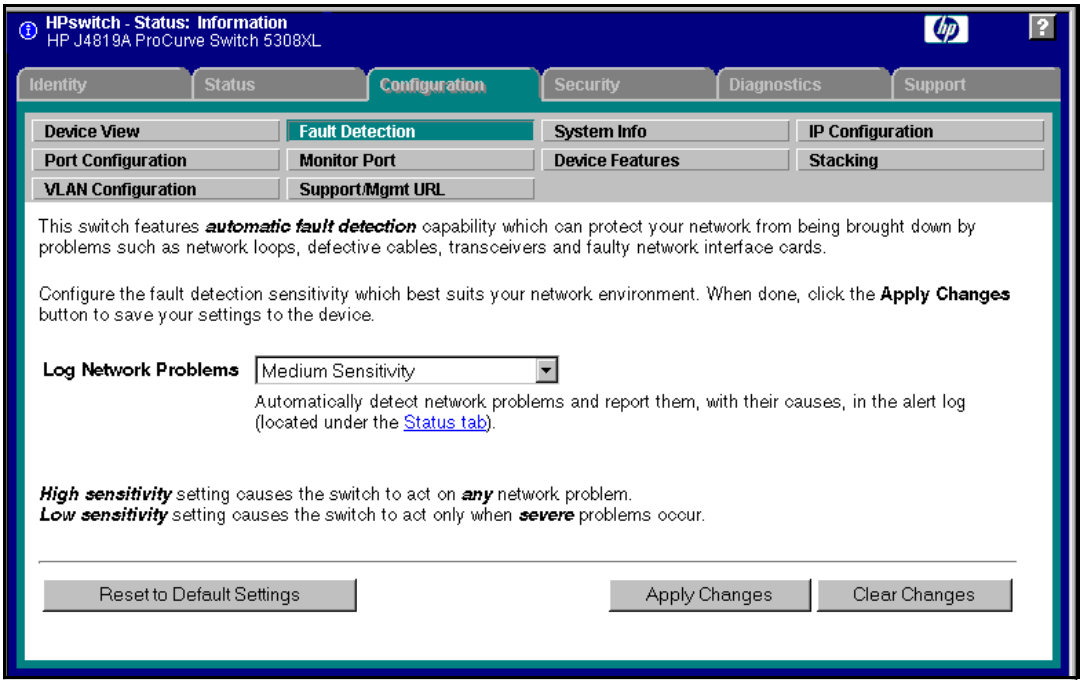

Figure 5-16. The Fault Detection Window

The Fault Detection screen contains a list box for setting fault detection and response policy, and enables you to set the sensitivity level at which a network problem should generate an alert and send it to the Alert Log.

To provide the most information on network problems in the Alert Log, the recommended sensitivity level for **Log Network Problems** is **High Sensitivity**. The Fault Detection settings are:

- **High Sensitivity.** This policy directs the switch to send all alerts to the Alert Log. This setting is most effective on networks that have none or few problems.
- **Medium Sensitivity.** This policy directs the switch to send alerts related to network problems to the Alert Log. If you want to be notified of problems which cause a noticeable slowdown on the network, use this setting.
- **Low Sensitivity.** This policy directs the switch to send only the most severe alerts to the Alert Log. This policy is most effective on a network where there are normally a lot of problems and you want to be informed of only the most severe ones.
- **Never.** Disables the Alert Log and transmission of alerts (traps) to the management server (in cases where a network management tool such as ProCurve Manager is in use). Use this option when you don't want to use the Alert Log.

The Fault Detection Window also contains three Change Control Buttons:

- **Apply Changes.** This button stores the settings you have selected for all future sessions with the web browser interface until you decide to change them.
- **Clear Changes.** This button removes your settings and returns the settings for the list box to the level it was at in the last saved detection-setting session.
- **Reset to Default Settings.** This button reverts the policy setting to Medium Sensitivity for Log Network Problems.

—This page left blank intentionally—

6

Switch Memory and Configuration

Contents

Overview 6-3

Overview of Configuration File Management 6-3

Using the CLI To Implement Configuration Changes 6-6

Using the Menu and Web Browser Interfaces To Implement Configuration Changes 6-9

Menu: Implementing Configuration Changes 6-9

Using Save and Cancel in the Menu Interface 6-10

Rebooting from the Menu Interface 6-11

Web: Implementing Configuration Changes 6-12

Using Primary and Secondary Flash Image Options 6-13

Displaying the Current Flash Image Data 6-13

Switch Software Downloads 6-15

Local Switch Software Replacement and Removal 6-16

Rebooting the Switch 6-18

Operating Notes 6-21

Multiple Configuration Files on 5300xl and 4200vl Switches 6-22

General Operation 6-24

Transitioning to Multiple Configuration Files 6-26

Listing and Displaying Startup-Config Files 6-27

Viewing the Startup-Config File Status with Multiple Configuration Enabled 6-27

Displaying the Content of A Specific Startup-Config File 6-29

Changing or Overriding the Reboot Configuration Policy 6-29

Managing Startup-Config Files in the Switch 6-31

Renaming an Existing Startup-Config File 6-32

Creating a New Startup-Config File 6-32

Erasing a Startup-Config File 6-34

Using the Clear + Reset Button Combination To Reset the Switch to Its Default Configuration 6-35
Transferring Startup-Config Files To or From a Remote Server 6-37
TFTP: Copying a Configuration File to a Remote Host 6-37
TFTP: Copying a Configuration File from a Remote Host 6-37
Xmodem: Copying a Configuration File to a Serially Connected Host 6-38
Xmodem: Copying a Configuration from a Serially Connected Host 6-38
Operating Notes for Multiple Configuration Files 6-39

Overview

This chapter describes:

- How switch memory manages configuration changes
- How the CLI implements configuration changes
- How the menu interface and web browser interface implement configuration changes
- How the switch provides software options through primary/secondary flash images
- How to use the switch's primary and secondary flash options, including displaying flash information, booting or restarting the switch, and other topics

Overview of Configuration File Management

The switch maintains two configuration files, the *running-config* file and the *startup-config* file.

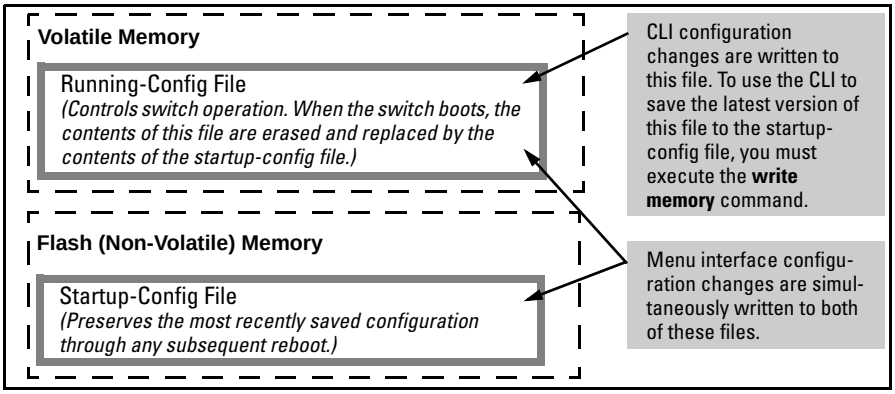

Figure 6-1. Conceptual Illustration of Switch Memory Operation

- **Running Config File:** Exists in volatile memory and controls switch operation. If no configuration changes have been made in the CLI since the switch was last booted, the running-config file is identical to the startup-config file.
- **Startup-config File:** Exists in flash (non-volatile) memory and is used to preserve the most recently-saved configuration as the "permanent" configuration.

Booting the switch replaces the current running-config file with a new running-config file that is an exact copy of the current startup-config file.

Note

Any of the following actions boots the switch:

- Executing the **boot** or the **reload** command in the CLI
- Executing the **boot** command in the menu interface
- Pressing the Reset button on the front of the switch
- Removing, then restoring power to the switch

For more on reboots and the switch's dual-flash images, see "Using Primary and Secondary Flash Image Options" on page 6-13.

Options for Saving a New Configuration. Making one or more changes to the running-config file creates a new operating configuration. *Saving* a new configuration means to overwrite (replace) the current startup-config file with the current running-config file. This means that if the switch subsequently reboots for any reason, it will resume operation using the new configuration instead of the configuration previously defined in the startup-config file. There are three ways to save a new configuration:

- **In the CLI:** Use the **write memory** command. This overwrites the current startup-config file with the contents of the current running-config file.
- **In the menu interface:** Use the **Save** command. This overwrites *both* the running-config file and the startup-config file with the changes you have specified in the menu interface screen.
- **In the web browser interface:** Use the **[Apply Changes]** button or other appropriate button. This overwrites *both* the running-config file and the startup-config file with the changes you have specified in the web browser interface window.

Note that using the CLI instead of the menu or web browser interface gives you the option of changing the running configuration without affecting the startup configuration. This allows you to test the change without making it

"permanent". When you are satisfied that the change is satisfactory, you can make it permanent by executing the **write memory** command. For example, suppose you use the following command to disable port 5:

```
ProCurve(config)# interface ethernet 5 disable
```

The above command disables port 5 in the running-config file, but not in the startup-config file. Port 5 remains disabled only until the switch reboots. If you want port 5 to remain disabled through the next reboot, use **write memory** to save the current running-config file to the startup-config file in flash memory.

```
ProCurve(config)# write memory
```

If you use the CLI to make a configuration change and then change from the CLI to the Menu interface without first using write memory to save the change to the startup-config file, then the switch prompts you to save the change. For example, if you use the CLI to create VLAN 20, and then select the menu interface, VLAN 20 is configured in the running-config file, but not in the startup-config file. In this case you will see:

```
ProCurve(config)# vlan 20
ProCurve(config)# menu
Do you want to save current configuration [y/n]?
```

If you type **[Y]**, the switch overwrites the startup-config file with the running-config file, and your configuration change(s) will be preserved across reboots. If you type **[N]**, your configuration change(s) will remain only in the running-config file. In this case, if you do not subsequently save the running-config file, your unsaved configuration changes will be lost if the switch reboots for any reason.

Storing and Retrieving Configuration Files. You can store or retrieve a backup copy of the startup-config file on another device. For more information, see appendix A, "Transferring an Operating System or Startup-Config File"

Using the CLI To Implement Configuration Changes

The CLI offers these capabilities:

- Access to the full set of switch configuration features
- The option of testing configuration changes before making them permanent

How To Use the CLI To View the Current Configuration Files. Use **show** commands to view the configuration for individual features, such as port status or Spanning Tree Protocol. However, to view either the entire startup-config file or the entire running-config file, use the following commands:

- **show config** — Displays a listing of the current startup-config file.
- **show running-config —** Displays a listing of the current running-config file.
- **write terminal** — Displays a listing of the current running-config file.
- **show config status** — Compares the startup-config file to the running-config file and lists one of the following results:
  - If the two configurations are the same you will see:
    - `Running configuration is the same as the startup configuration.`
  - If the two configurations are different, you will see:
    - `Running configuration has been changed and needs to be saved.`

Note

Show config, **show running-config**, and **write terminal** commands display the configuration settings that differ from the switch's factory-default configuration.

How To Use the CLI To Reconfigure Switch Features. Use this procedure to permanently change the switch configuration (that is, to enter a change in the startup-config file).

1. Use the appropriate CLI commands to reconfigure the desired switch parameters. This updates the selected parameters in the running-config file.
2. Use the appropriate **show** commands to verify that you have correctly made the desired changes.

3. Observe the switch's performance with the new parameter settings to verify the effect of your changes.
4. When you are satisfied that you have the correct parameter settings, use the **write memory** command to copy the changes to the startup-config file.

Syntax: write memory

For example, the default port mode setting is **auto**. Suppose that your network uses Cat 3 wiring and you want to connect the switch to another autosensing device capable of 100 Mbps operation. Because 100 Mbps over Cat 3 wiring can introduce transmission problems, the recommended port mode is **auto-10**, which allows the port to negotiate full- or half-duplex, but restricts speed to 10 Mbps. The following command configures port A5 to auto-10 mode in the running-config file, allowing you to observe performance on the link without making the mode change permanent.

```
ProCurve(config)# interface e a5 speed-duplex auto-10
```

After you are satisfied that the link is operating properly, you can save the change to the switch's permanent configuration (the startup-config file) by executing the following command:

```
ProCurve(config)# write memory
```

The new mode (**auto-10**) on port A5 is now saved in the startup-config file, and the startup-config and running-config files are identical. If you subsequently reboot the switch, the **auto-10** mode configuration on port A5 will remain because it is included in the startup-config file.

How To Cancel Changes You Have Made to the Running-Config File.

If you use the CLI to change parameter settings in the running-config file, and then decide that you don't want those changes to remain, you can use either of the following methods to remove them:

- Manually enter the earlier values you had for the changed settings. (This is recommended if you want to restore a small number of parameter settings to their previous boot-up values.)
- Update the running-config file to match the startup-config file by rebooting the switch. (This is recommended if you want to restore a larger number of parameter settings to their previous boot-up values.)

If you use the CLI to change a parameter setting, and then execute the **boot** command without first executing the **write memory** command to save the change, the switch prompts you to specify whether to save the changes in the current running-config file. For example:

Disables port 1 in the running configuration, which causes port 1 to block all traffic.

```
ProCurve(config)# interface e 1 disable
ProCurve(config)# boot
Device will be rebooted, do you want to continue [y/n]? y
```

Press **[Y]** to continue the rebooting process.

You will then see this prompt.

```
Do you want to save current configuration [y/n]?
```

Figure 6-2. Boot Prompt for an Unsaved Configuration

The above prompt means that one or more parameter settings in the running-config file differ from their counterparts in the startup-config file and you need to choose which config file to retain and which to discard.

- If you want to update the startup-config file to match the running-config file, press **[Y]** for "yes". (This means that the changes you entered in the running-config file will be saved in the startup-config file.)
- If you want to discard the changes you made to the running-config file so that it will match the startup-config file, then press **[N]** for "no". (This means that the switch will discard the changes you entered in the running-config file and will update the running-config file to match the startup-config file.)

Note

If you use the CLI to make a change to the running-config file, you should either use the **write memory** command or select the save option allowed during a reboot (figure 6-2, above) to save the change to the startup-config file. That is, if you use the CLI to change a parameter setting, but then reboot the switch from either the CLI or the menu interface without first executing the **write memory** command in the CLI, the current startup-config file will replace the running-config file, and any changes in the running-config file will be lost.

Using the **Save** command in the menu interface does not save a change made to the running config by the CLI unless you have also made a configuration change in the menu interface. Also, the menu interface displays the current running-config values. Thus, where a parameter setting is accessible from both the CLI and the menu interface, if you change the setting in the CLI, the new value will appear in the menu interface display for that parameter. *However, as indicated above, unless you also make a configuration change in the menu interface, only the* **write memory** *command in the CLI will actually save the change to the startup-config file.*

How To Reset the startup-config and running-config Files to the Factory Default Configuration. This command reboots the switch, replacing the contents of the current startup-config and running-config files with the factory-default startup configuration.

Syntax: erase startup-config

For example:

```
ProCurve(config)# erase startup-config
Configuration will be deleted and device rebooted, continue [y/n]?
```

Press **[Y]** to replace the current configuration with the factory default configuration and reboot the switch. Press **[N]** to retain the current configuration and prevent a reboot.

Using the Menu and Web Browser Interfaces To Implement Configuration Changes

The menu and web browser interfaces offer these advantages:

- Quick, easy menu or window access to a subset of switch configuration features
- Viewing several related configuration parameters in the same screen, with their default and current settings
- Immediately changing both the running-config file and the startup-config file with a single command

Menu: Implementing Configuration Changes

You can use the menu interface to simultaneously save and implement a subset of switch configuration changes without having to reboot the switch. That is, when you save a configuration change in the menu interface, you simultaneously change both the running-config file and the startup-config file.

Note

The only exception to this operation are two VLAN-related parameter changes that require a reboot—described under "Rebooting To Activate Configuration Changes" on page 6-11.

Using **Save** and **Cancel** in the Menu Interface

For any configuration screen in the menu interface, the Save command:

1. Implements the changes in the running-config file
2. Saves your changes to the startup-config file

If you decide not to save and implement the changes in the screen, select **Cancel** to discard them and continue switch operation with the current operation. For example, suppose you have made the changes shown below in the System Information screen:

To save and implement the changes for all parameters in this screen, press the **[Enter]** key, then press **[S]** (for **Save**). To cancel all changes, press the **[Enter]** key, then press **[C]** (for **Cancel**)

```
ProCurve
========================= CONSOLE - MANAGER MODE ============================
                    Switch Configuration - System Information

  System Name :    ProCurve Switch
  System Contact :
  System Location :

  Inactivity Timeout (min) [0] : 0      MAC Age Time (sec) [300] : 300
  Inbound Telnet Enabled [Yes] : Yes    Web Agent Enabled [Yes] : Yes
  Time Sync Method [None] : TIMEP
  TimeP Mode [Disabled] : Disabled


  Time Zone [0] : 0
  Daylight Time Rule [None] : Continental-US-and-Canada


 Actions->   Cancel     Edit     Save     Help

Select Daylight Time Rule for your location.
Use arrow keys to change field selection, <Space> to toggle field choices,
and <Enter> to go to Actions.
```

Figure 6-3. Example of Pending Configuration Changes You Can Save or Cancel

Note

If you reconfigure a parameter in the CLI and then go to the menu interface without executing a **write memory** command, those changes are stored only in the running configuration (even if you execute a Save operation in the menu interface). If you then execute a switch **boot** command in the menu interface, the switch discards the configuration changes made while using the CLI. To ensure that changes made while using the CLI are saved, execute **write memory** in the CLI before rebooting the switch.

Rebooting from the Menu Interface

- Terminates the current session and performs a reset of the operating system
- Activates any configuration changes that require a reboot
- Resets statistical counters to zero

(Note that statistical counters can be reset to zero without rebooting the switch. See "To Display the Port Counter Summary Report" on page B-12.)

To Reboot the switch, use the **Reboot Switch** option in the Main Menu. (Note that the Reboot Switch option is not available if you log on in Operator mode; that is, if you enter an Operator password instead of a manager password at the password prompt.)

Optional Reboot Switch Command

Note: The Stacking feature is available on the Series 3400/6400cl and Series 4200vl switches.

```
========================- CONSOLE - MANAGER MODE -============================
                                  Main Menu

   1. Status and Counters...
   2. Switch Configuration...
   3. Console Passwords...
   4. Event Log
   5. Command Line (CLI)
   6. Reboot Switch
   7. Download OS
   8. Run Setup
   9. Stacking...
   0. Logout


Provides the menu to display configuration, status, and counters.
To select menu item, press item number, or highlight item and press <Enter>.
```

Figure 6-4. The Reboot Switch Option in the Main Menu

Rebooting To Activate Configuration Changes. Configuration changes for most parameters become effective as soon as you save them. However, you must reboot the switch in order to implement a change in the **Maximum VLANs to support** parameter.

(To access these parameters, go to the Main menu and select **2. Switch Configuration**, then **8. VLAN Menu**, then **1. VLAN Support**.)

If configuration changes requiring a reboot have been made, the switch displays an asterisk (*) next to the menu item in which the change has been made. For example, if you change and save parameter values for the **Maximum VLANs to support** parameter, an asterisk appears next to the **VLAN Support** entry in the VLAN Menu screen, and also next to the **Switch Configuration** ..entry in the Main menu, as shown in figure 4-6:

Asterisk indicates a configuration change that requires a reboot in order to take effect.

Reminder to reboot the switch to activate configuration changes.

```
==========================- CONSOLE - MANAGER MODE -============================
                            Switch Configuration Menu

   1. System Information
   2. Port/Trunk Settings
   3. Network Monitoring Port
   4. Spanning Tree Operation
   5. IP Configuration
   6. SNMP Community Names
   7. IP Authorized Managers
  *8. VLAN Menu...
   0. Return to Main Menu...


Displays the menu to activate and configure, or deactivate VLAN support.
To select menu item, press item number, or highlight item and press <Enter>.
(*Needs reboot to activate changes.)
```

Figure 6-5. Indication of a Configuration Change Requiring a Reboot

Web: Implementing Configuration Changes

You can use the web browser interface to simultaneously save and implement a subset of switch configuration changes without having to reboot the switch. That is, when you save a configuration change (in most cases, by clicking on **[Apply Changes]** or **[Apply Settings]**, you simultaneously change both the running-config file and the startup-config file.

Note

If you reconfigure a parameter in the CLI and then go to the browser interface without executing a **write memory** command, those changes will be saved to the startup-config file if you click on **[Apply Changes]** or **[Apply Settings]** in the web browser interface.

Using Primary and Secondary Flash Image Options

The Series switches covered by this guide feature two flash memory locations for storing switch software image files:

- **Primary Flash:** The default storage for a switch software image.
- **Secondary Flash:** The additional storage for either a redundant or an alternate switch software image.

With the Primary/Secondary flash option you can test a new image in your system without having to replace a previously existing image. You can also use the image options for troubleshooting. For example, you can copy a problem image into Secondary flash for later analysis and place another, proven image in Primary flash to run your system. The switch can use only one image at a time.

The following tasks involve primary/secondary flash options:

- Displaying the current flash image data and determining which switch software versions are available
- Switch software downloads
- Replacing and removing (erasing) a local switch software version
- System booting

Displaying the Current Flash Image Data

Use the commands in this section to:

- Determine whether there are flash images in both primary and secondary flash
- Determine whether the images in primary and secondary flash are the same
- Identify which switch software version is currently running

Viewing the Currently Active Flash Image Version. This command identifies the software version on which the switch is currently running, and whether the active version was booted from the primary or secondary flash image.

Syntax: show version

For example, if the switch is using a software version of E.08.22 stored in Primary flash, **show version** produces the following:

```
ProCurve(config)# show version
 Image stamp:     /sw/code/build/info(s01)
                  Dec 24 2005 10:50:26
                  E.09.03
                  1796
 Boot Image:      Primary
```

Figure 6-6. Example Showing the Identity of the Current Flash Image (5300xl)

Determining Whether the Flash Images Are Different Versions. If the flash image sizes in primary and secondary are the same, then in almost every case, the primary and secondary images are identical. This command provides a comparison of flash image sizes, plus the boot ROM version and from which flash image the switch booted. For example, in the following case, the images are different versions of the switch software, and the switch is running on the version stored in the secondary flash image:

```
ProCurve(config)# show flash
Image            Size(Bytes)   Date    Version
-----            ----------  -------- -------
Primary Image    : 3275389   05/11/04 E.08.30
Secondary Image  : 3258128   02/06/04 E.08.22
Boot Rom Version: E.05.04
Current Boot     : Primary
```

The unequal code size and differing dates indicate two different versions of the software.

Figure 6-7. Example Showing Different Flash Image Versions (5300xl)

Determining Which Flash Image Versions Are Installed. The **show version** command displays which software version the switch is currently running and whether that version booted from primary or secondary flash. Thus, if the switch booted from primary flash, you will see the version number of the software version stored in primary flash, and if the switch booted from secondary flash, you will see the version number of the software version stored in secondary flash. Thus, by using **show version**, then rebooting the switch from the opposite flash image and using **show version** again, you can determine the version(s) of switch software in both flash sources. For example:

1. In this example **show version** indicates the switch has version E.08.30 in primary flash.
2. After the **boot system** command, **show version** indicates that version E.08.20 is in secondary flash.

```
ProCurve(config)# show version
Image stamp:     /sw/code/build/info(s02)
                 Jun 01 2004 14:03:06
                 E.08.30
                 354
Boot Image:      Primary

ProCurve(config)# boot system flash secondary
Device will be rebooted, do you want to contiue [y/n]? y
 •
 •
 •
ProCurve> show version
Image stamp:     /sw/code/build/info(s01)
                 May 05 2004 11:14:33
                 E.08.20
                 1793
Boot Image:      Secondary
```

Figure 6-8. Determining the Software Version in Primary and Secondary Flash

Switch Software Downloads

The following table shows the switch's options for downloading a software version to flash and booting the switch from flash

Table 6-1. Primary/Secondary Memory Access

Action	Menu	CLI	Web Browser	SNMP
Download to Primary	Yes	Yes	Yes	Yes
Download to Secondary	No	Yes	No	Yes
Boot from Primary	Yes	Yes	Yes	Yes
Boot from Secondary	No	Yes	No	Yes

The different software download options involve different **copy** commands, plus **xmodem**, and **tftp**. These topics are covered in appendix A, "File Transfers".

Download Interruptions. In most cases, if a power failure or other cause interrupts a flash image download, the switch reboots with the image previously stored in primary flash. In the unlikely event that the primary image is corrupted, as a result of an interruption, the switch will reboot from secondary flash and you can either copy the secondary image into primary or download another image to primary from an external source. See Appendix A, "File Transfers".

Local Switch Software Replacement and Removal

This section describes commands for erasing a software version and copying an existing software version between primary and secondary flash.

Note

It is not necessary to erase the content of a flash location before downloading another software file. The process automatically overwrites the previous file with the new file. If you want to remove an unwanted software version from flash, ProCurve recommends that you do so by overwriting it with the same software version that you are using to operate the switch, or with another acceptable software version. To copy a software file between the primary and secondary flash locations, see "Copying a Switch Software Image from One Flash Location to Another", below.

The local commands described here are for flash image management within the switch. To download a software image file from an external source, refer to Appendix A, "File Transfers".

Copying a Switch Software Image from One Flash Location to Another. When you copy the flash image from primary to secondary or the reverse, the switch overwrites the file in the destination location with a copy of the file from the source location. This means you *do not* have to erase the current image at the destination location before copying in a new image.

Caution

Verify that there is an acceptable software version in the source flash location from which you are going to copy. Use the **show flash** command or, if necessary, the procedure under "Determining Which Flash Image Versions Are Installed" on page 6-14 to verify an acceptable software version. Attempting to copy from a source image location that has a corrupted flash image overwrites the image in the destination flash location. In this case, the switch will not have a valid flash image in either flash location, but will continue running on a temporary flash image in RAM. *Do not reboot the switch.* Instead, immediately download another valid flash image to primary or secondary flash. Otherwise, if the switch is rebooted without a software image in either primary or secondary flash, the temporary flash image in RAM will be cleared and the switch will go down. To recover, see "Restoring a Flash Image" on page C-58 (in the Trouble-shooting chapter).

Syntax: copy flash flash <*destination flash*>

where: *destination flash* = **primary** or **secondary**:

For example, to copy the image in secondary flash to primary flash:

1. Verify that there is a valid flash image in the secondary flash location. The following figure indicates that a software image is present in secondary flash. (If you are unsure whether the image is secondary flash is valid, try booting from it before you proceed, by using **boot system flash secondary**.)

```
ProCurve(config)# show flash
Image            Size(Bytes)   Date    Version
-----            ----------  -------- -------
Primary Image    : 3275389   05/11/04 E.08.30
Secondary Image  : 3258128   02/06/04 E.08.22
Boot Rom Version: E.05.04
Current Boot     : Primary
```

The unequal code size, differing dates, and differing version numbers indicates two different versions of the software.

Figure 6-9. Example Indicating Two Different Software Versions in Primary and Secondary Flash

Execute the copy command as follows:

```
ProCurve(config)# copy flash flash primary
```

Erasing the Contents of Primary or Secondary Flash. This command deletes the software image file from the specified flash location.

Caution:

No Undo!

Before using this command in one flash image location (primary or secondary), ensure that you have a valid software file in the other flash image location (secondary or primary). If the switch has only one flash image loaded (in either primary or secondary flash) and you erase that image, then the switch does not have a software image stored in flash. In this case, if you do not reboot or power cycle the switch, you can recover by using xmodem or tftp to download another software image.

Syntax: erase flash < primary | secondary >

For example, to erase the software image in primary flash, do the following:

1. First verify that a usable flash image exists in secondary flash. The most reliable way to ensure this is to reboot the switch from the flash image you want to retain. For example, if you are planning to erase the primary image, then first reboot from the secondary image to verify that the secondary image is present and acceptable for your system:

   ```
   ProCurve# boot system flash secondary
   ```

2. Then erase the software image in the selected flash (in this case, primary):

```
ProCurve# erase flash primary
The Primary OS Image will be deleted, continue [y/n]?
```

The prompt shows which flash location will be erased.

Figure 6-10. Example of Erase Flash Prompt

3. Type **y** at the prompt to complete the flash erase.
4. Use **show flash** to verify erasure of the selected software flash image

```
ProCurve# show flash

 Compressed Primary Code size   = 0
 Compressed Secondary Code size = 2555802
 Boot Rom Version:                E.05.04
 Current Boot:                    Secondary
```

The "**0**" here shows that primary flash has been erased.

Figure 6-11. Example of Show Flash Listing After Erasing Primary Flash

Rebooting the Switch

The switch offers reboot options through the **boot** and **reload** commands, plus the options inherent in a dual-flash image system. Generally, using **boot** provides more comprehensive self-testing; using **reload** gives you a faster reboot time.

Table 6-2. Comparing the Boot and Reload Commands

Actions	Included In Boot?	Included In Reload	Note
Save all configuration changes since the last boot or reload	Optional, with prompt	Yes, automatic	Config changes saved to the startup-config file
Perform all system self-tests	Yes	No	Reload provides a faster system reboot.
Choice of primary or secondary	Yes	No—Uses the current flash image.	

Booting from Primary Flash. This command always boots the switch from primary flash, executes the complete set of subsystem self-tests, and gives you the option of saving or discarding any configuration changes in the running-config file.

Syntax: boot

For example, to boot the switch from primary flash with pending configuration changes in the running-config file:

```
ProCurve(config)# boot

Device will be rebooted, do you want to continue [y/n]?  y
Boot from primary flash

Do you want to save current configuration [y/n]?  _
```

Figure 6-12. Example of Boot Command (Default Primary Flash)

In the above example, typing either a **y** or **n** at the second prompt initiates the reboot operation. (Entering **y** saves any configuration changes from the running-config file to the startup-config file; entering **n** discards them.) Also, if there are no pending configuration changes in the running-config file, then the reboot commences without the pause to display `Boot from primary flash`.

Booting from a Specified Flash. This version of the boot command gives you the option of specifying whether to reboot from primary or secondary flash, and is the required command for rebooting from secondary flash. This option also executes the complete set of subsystem self-tests.

Syntax: boot system flash < primary | secondary >

For example, to reboot the switch from secondary flash when there are no pending configuration changes in the running-config file:

```
ProCurve(config)# boot system flash secondary

Device will be rebooted, do you want to continue [y/n]?  y
Boot from secondary flash

Do you want to save current configuration [y/n]?  _
```

Figure 6-13. Example of Boot Command with Primary/Secondary Flash Option

In the above example, typing either a **y** or **n** at the second prompt initiates the reboot operation. Also, if there are no pending configuration changes in the running-config file, then the reboot commences without the pause to display `Boot from secondary flash`.

Using the Fastboot feature. The **fastboot** command allows a boot sequence that skips the internal power-on self-tests, resulting in a faster boot time.

Syntax: [no] fastboot

Enables the fastboot option
[no]: *disables the feature.*

Syntax: show fastboot

Shows the status of the fastboot feature, either enabled or disabled.

The fastboot command is shown below.

```
ProCurve(config)# fastboot
```

Figure 6-14. Example of the Fastboot Command

Rebooting from the Current Software Version. **Reload** reboots the switch from the flash image and startup-config file on which the switch is currently running, and provides the option for saving to the startup-config file any configuration changes currently in the running-config file. Because **reload** bypasses some subsystem self-tests, the switch reboots faster than if you use either of the **boot** command options.

Syntax: reload

For example, if you change the number of VLANs the switch supports, you must reboot the switch in order to implement the change. Reload automatically saves your configuration changes and reboots the switch from the same software image you have been using:

```
ProCurve(config)# max-vlans 12
Command will take effect after saving configuration and reboot.
ProCurve(config)# reload
Device will be rebooted, do you want to continue [y/n]?  y
Do you want to save current configuration [y/n]?  _
```

Figure 6-15. Using Reload with Pending Configuration Changes

Operating Notes

Default Boot Source. The switch reboots from primary flash by default unless you specify the secondary flash.

Boot Attempts from an Empty Flash Location. In this case, the switch aborts the attempt and displays

```
Image does not exist
Operation aborted.
```

Interaction of Primary and Secondary Flash Images with the Current Configuration. The switch has one startup-config file (page 6-3), which it always uses for reboots, regardless of whether the reboot is from primary or secondary flash. Also, for rebooting purposes, it is not necessary for the software image and the startup-config file to support identical software features. For example, suppose you have just downloaded a software upgrade that includes new features that are not supported in the software you used to create the current startup-config file. In this case, the software simply assigns factory-default values to the parameters controlling the new features. Similarly, If you create a startup-config file while using a version "Y" of the switch software, and then reboot the switch with an earlier software version "X" that does not include all of the features found in "Y", the software simply ignores the parameters for any features that it does not support.

Multiple Configuration Files on 5300xl and 4200vl Switches

This section applies only to 5300xl switches running software release E.09.xx or greater, and 4200vl switches.

Action	Page
Listing and Displaying Startup-Config Files	6-27
Changing or Overriding the Reboot Configuration Policy	6-29
Managing Startup-Config Files	
Renaming Startup-Config Files	6-32
Copying Startup-Config Files	6-32
Erasing Startup-Config Files	6-34
Effect of Using the Clear + Reset Buttons	6-35
Copying Startup-Config Files to or from a Remote Server	6-37

With releases prior to E.09.*xx*, the 5300xl switch uses one startup-config file that automatically generates an identical configuration for the running-config file when the switch reboots. The switch operates using this running-config file, and any configuration changes affect only the running-config file until a **write memory** command is executed from the CLI (or a **Save** command is executed from the Menu interface) to copy the changes back to the startup-config file. Also, the same startup-config is used regardless of whether the switch reboots from the primary or secondary boot path.

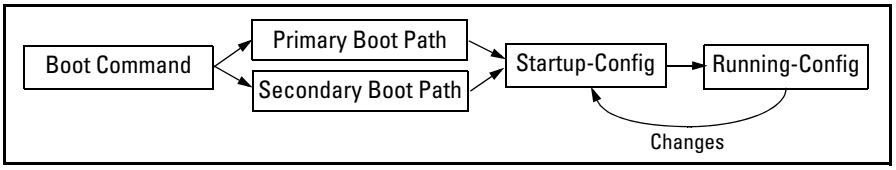

Figure 6-16. Reboot Process for Software Releases Earlier Than E.09.*xx*

This method of operation means that you cannot preserve different startup-config files across a reboot without using remote storage.

Beginning with software release E.09.*xx*, the switch allows up to three startup-config files with options for selecting which startup-config file to use for:

- A fixed reboot policy using a specific startup-config file for a specific boot path (primary or secondary flash)
- Overriding the current reboot policy on a per-instance basis

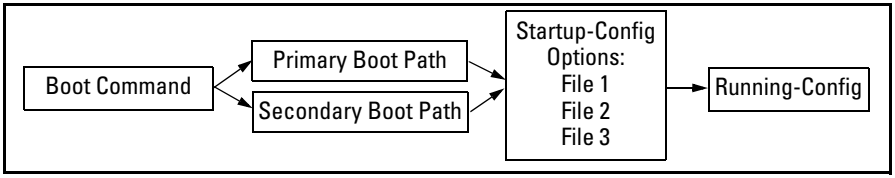

Figure 6-17. Optional Reboot Process for Software Release E.09.*xx* or Greater

While you can still use remote storage for startup-config files, you can now maintain multiple startup-config files on the switch and choose which version to use for a reboot policy or an individual reboot.

This choice of which configuration file to use for the startup-config at reboot provides the following new options:

- The switch can reboot with different configuration options without having to exchange one configuration file for another from a remote storage location.
- Transitions from one software release to another can be performed while maintaining a separate configuration for the different software release versions.
- By setting a reboot policy using a known good configuration and then overriding the policy on a per-instance basis, you can test a new configuration with the provision that if an unattended reboot occurs, the switch will come up with the known, good configuration instead of repeating a reboot with a misconfiguration.

General Operation

Multiple Configuration Storage in the Switch. The switch uses three memory "slots", with identity (**id**) numbers of **1**, **2**, and **3**.

Memory Slots for Different Startup-Config Files

```
ProCurve(config)# show config files

Configuration files:

 id | act pri sec | name
---+-------------+-----------------------------
 1 |             | oldConfig
 2 |  *   *   *  | workingConfig
 3 |             |
```

A startup-config file stored in a memory slot has a unique, changeable file name. A software version earlier than release E.09.*xx* (that is, prior to the Multiple Configuration feature) always uses the startup-config file in memory slot 1, regardless of whether the software used for the reboot is stored in primary or secondary flash memory. Software version E.09.*xx* and greater can use the startup-config in any of the memory slots (if the software version supports the configured features).

Boot Options. With multiple startup-config files in the switch you can specify a policy for the switch to use upon reboot. The options include:

- Use the designated startup-config file with either or both reboot paths (primary or secondary flash)
- Override the current reboot policy for one reboot instance by specifying a boot path (primary or secondary flash) and the startup-config file to use.

Changing the Startup-Config File. When the switch reboots, the startup-config file supplies the configuration for the running-config file the switch uses to operate. Making changes to the running-config file and then executing a **write-mem** command (or, in the Menu interface, the **Save** command) are written back to the startup-config file used at the last reboot. For example, suppose that a system administrator performs the following on a switch that has two startup-config files (**workingConfig** and **backupConfig**):

1. Reboot the switch through the Primary boot path using the startup-config file named **backupConfig**.
2. Use the CLI to make configuration changes in the running-config file, and then execute **write mem**.

The result is that the startup-config file used to reboot the switch is modified by the actions in step 2.

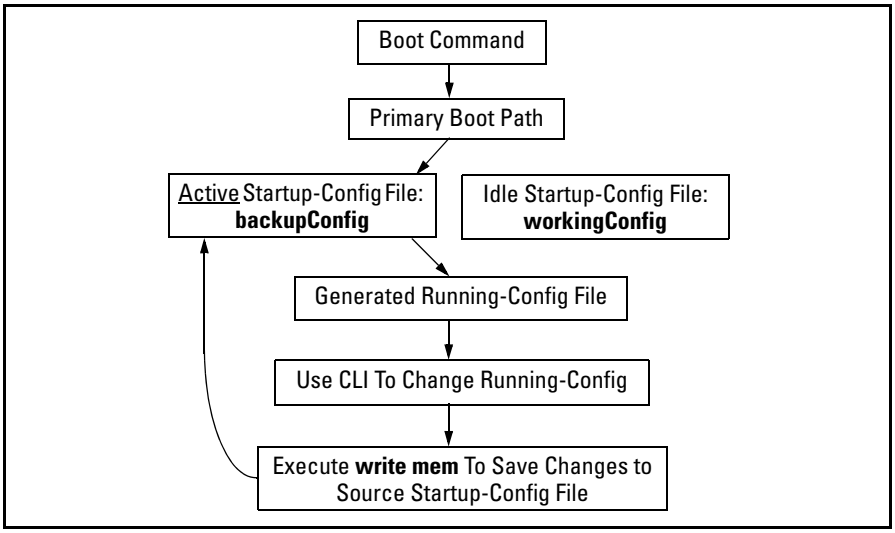

Figure 6-18. Example of Reboot Process and Making Changes to the Startup-Config File

Creating an Alternate Startup-Config File. There are two methods for creating a new configuration file:

- Copy an existing startup-config file to a new filename, then reboot the switch, make the desired changes to the running-config file, then execute **write memory**. (Refer to figure 6-18, above.)
- Erase the active startup-config file. This generates a new, default startup-config file that always results when the switch automatically reboots after deletion of the currently active startup-config file. (Refer to "Erasing a Startup-Config File" on page 6-34.)

Transitioning to Multiple Configuration Files

If your 5300xl switch was shipped from the factory with software release E.08.*xx* or earlier installed, you must download software release E.09.*xx* or greater to use the multiple configuration feature. At the first reboot with a software release supporting multiple configuration, the switch:

- Assigns the filename **oldConfig** to the existing startup-config file (which is stored in memory slot 1).
- Saves a copy of the existing startup-config file in memory slot 2 with the filename **workingConfig**.
- Assigns the **workingConfig** file as the active configuration and the default configuration for all subsequent reboots using either primary or secondary flash.

```
ProCurve(config)# show config files

Configuration files:

 id | act pri sec | name
 ---+-------------+-------------------------------------------
  1 |             | oldConfig
  2 |  *   *   *  | workingConfig
  3 |             |
```

Figure 6-19. Switch Memory Assignments After the First Reboot from Software Supporting Multiple Configuration

In the above state, the switch always:

- Uses the **workingConfig** file to reboot with E.09.*xx* or greater software releases
- Uses the **oldConfig** file to reboot with E.08.xx or earlier software

The commands described later in this section enable you to view the current multiple configuration status, manage multiple startup-config files, configure reboot policies, and override reboot policies on a per-instance basis.

Listing and Displaying Startup-Config Files

Command	Page
show config files	Below
show config < *filename* >	6-29

Viewing the Startup-Config File Status with Multiple Configuration Enabled

Rebooting the switch with software release E.09.*xx* or later automatically enables the multiple configuration feature.

Syntax: show config files

This command displays the available startup-config files on the switch and the current use of each file.

id: *Identifies the memory slot for each startup-config file available on the switch. Software versions earlier than E.09.xx always use the startup-config file in slot 1.*

act: *An asterisk (*) in this column indicates that the corresponding startup-config file is currently in use.*

pri: *An asterisk (*) in this column indicates that the corresponding startup-config file is currently assigned to the primary boot path.*

sec: *An asterisk (*) in this column indicates that the corresponding startup-config file is currently assigned to the secondary boot path.*

name: *Shows the filename for each listed startup-config file in the switch. Refer to "Renaming an Existing Startup-Config File" on page 6-32 for the command you can use to change existing startup-config filenames.*

— Continued on the next page. —

— Continued from the previous page. —

In the default configuration:

- *If the switch was shipped from the factory with software release E.09.xx installed in both the primary and secondary boot paths, then one startup-config file named* **config1** *is used for both paths and is stored in memory slot 1. Memory slots 2 and 3 are empty in this default configuration.)*
- *If the switch is running a software version earlier than E.09.xx and you download software version E.09.xx or greater to one of the boot paths, then the startup-config file in memory slot 1 supports the pre-E.09.xx software version and the startup-config file in memory slot 2 supports the E.09.xx (or greater) software version. (In this case, the default filename in memory slot 1 is* **oldConfig** *and the default filename in slot 2 is* **workingConfig**. *Memory slot 3 is empty in the default configuration.*

For example, after downloading software version E.09.*xx* or greater to the secondary flash in a 5300xl switch running software earlier than E.09.*xx* in primary flash, **show config files** displays the following:

```
ProCurve(config)# show config files

Configuration files:

 id | act pri sec | name
 ---+-------------+-------------------------------------------
  1 |             | oldConfig
  2 |  *   *   *  | workingConfig
  3 |             |
```

When you download software release E.09.*xx* for the first time and boot on this release, the switch places a copy of the **oldConfig** startup-config file in memory slot 2 and renames it **workingConfig**. This display shows that the **workingConfig** file in memory slot 2 and:

- Is the currently active configuration
- Is invoked when the switch boots with the software image in either the primary or secondary boot path.

As this example shows, you must reconfigure either the primary or the secondary boot path if you want to boot the switch using the startup-config file in another memory slot.

(You can also change the above filenames. Refer to "Renaming an Existing Startup-Config File" on page 6-32.)

Figure 6-20. Example of Displaying the Current Multiple Configuration Status

Displaying the Content of A Specific Startup-Config File

With Multiple Configuration enabled, the switch can have up to three startup-config files. Because the **show config** command always displays the content of the currently active startup-config file, the command extension shown below is needed to allow viewing the contents of any other startup-config files stored in the switch.

Syntax: show config < *filename* >

Available in software release E.09.xx or greater, this command displays the content of the specified startup-config file in the same way that the **show config** *command displays the content of the default (currently active) startup-config file.*

Changing or Overriding the Reboot Configuration Policy

Command	Page
startup-default [primary | secondary] config < *filename* >	Below
boot system flash < primary | secondary > config < *filename* >	6-31

Prior to software release E.09.*xx*, the default boot configuration policy was to boot the switch using the current (only) startup-config file. Beginning with software release E.09.*xx*, which allows up to three separate startup-config files, you can boot the switch using any available startup-config file.

Changing the Reboot Configuration Policy. For a given reboot, the switch automatically reboots from the startup-config file assigned to the flash location (primary or secondary) being used for the current reboot. For example, when you first download a software version that supports multiple configuration files (E.09.*xx* or greater), and boot from the flash location of this version, the switch copies the existing startup-config file (named **oldConfig**) into memory slot 2, renames this file to **workingConfig**, and assigns **workingConfig** as:

- The active configuration file
- The configuration file to use when booting from either primary or secondary flash.

In this case, the switch is configured to automatically use the **workingConfig** file in memory slot 2 for all reboots. (Refer to figure 6-20 on page page 6-28.)

You can use the following command to change the current policy so that the switch automatically boots using a different startup-config file.

Syntax: startup-default [primary | secondary] config < *filename* >

Specifies a boot configuration policy option:

[primary | secondary] config < *filename* >: *Designates the startup-config file to use in a reboot with the software version stored in a specific flash location. Use this option to change the reboot policy for either primary or secondary flash, or both.*

config < *filename* >: *Designates the startup-config file to use for all reboots, regardless of the flash version used. Use this option when you want to automatically use the same startup-config file for all reboots, regardless of the flash source used.*

Note: *To override the current reboot configuration policy for a single reboot instance, use the* **boot system flash** *command with the options described under "Overriding the Default Reboot Configuration Policy" on page 6-31.*

For example, suppose:

- Software release E.09.*xx* is stored in primary flash and a later software release is stored in secondary flash.
- The system operator is using memory slot 1 for a reliable, minimal configuration (named **minconfig**) for the software version in the primary flash, and slot 2 for a modified startup-config file (named **newconfig**) that includes untested changes for improved network operation with the software version in secondary flash.

The operator wants to ensure that in case of a need to reboot by pressing the Reset button, or if a power failure occurs, the switch will automatically reboot with the minimal startup-config file in memory slot 1. Since a reboot due to pressing the Reset button or to a power cycle always uses the software version in primary flash, the operator needs to configure the switch to always boot from primary flash with the startup-config file named **minconfig** (in memory slot 1). Also, whenever the switch boots from secondary flash, the operator also wants the startup-config named **newconfig** to be used. The following two commands configure the desired behavior.

```
ProCurve(config)# startup-default pri config minconfig
ProCurve(config) # startup-default sec config newconfig.
```

Overriding the Default Reboot Configuration Policy. This command provides a method for manually rebooting with a specific startup-config file other than the file specified in the default reboot configuration policy.

Syntax: boot system flash < primary | secondary > config < *filename* >

Specifies the name of the startup-config file to apply for the immediate boot instance only. This command overrides the current reboot policy. Software release E.09.xx or greater must be in the selected boot path (primary or secondary) to include config < *filename* > *in the command string. (This command is not supported in earlier software releases.)*

Using Reload To Reboot From the Current Flash Image and Startup-Config File.

Syntax: reload

This command boots the switch from the currently active flash image and startup-config file. Because **reload** *bypasses some subsystem self-tests, the switch boots faster than if you use a* **boot** *command.*

Note: *To identify the currently active startup-config file, use the* **show config files** *command. For an example, refer to* *"Rebooting from the Current Software Version" on page 6-20.*

Managing Startup-Config Files in the Switch

Command	Page
rename config < *current-filename* > < *newname-str* >	6-32
copy config < *source-filename* > config < *dest-filename* >	6-32
erase config < *filename* > | startup-config	6-34
Erase startup-config using the front-panel Clear + Reset Buttons	6-35

Renaming an Existing Startup-Config File

Syntax: rename config < *current-filename* > < *newname-str* >

This command changes the name of an existing startup-config file. A file name can include up to 63, alphanumeric characters. Blanks are allowed in a file name enclosed in quotes (" " or ' '). (File names are not case-sensitive.)

Creating a New Startup-Config File

The switch allows up to three startup-config files. You can create a new startup-config file if there is an empty memory slot or if you want to replace one startup-config file with another.

Syntax: copy config < *source-filename* > config < *target-filename* >

This command makes a local copy of an existing startup-config file by copying the contents of an existing startup-config file in one memory slot to a new startup-config file in another, empty memory slot. This enables you to use a separate configuration file to experiment with configuration changes, while preserving the source file unchanged. It also simplifies a transition from one software version to another by enabling you to preserve the startup-config file for the earlier software version while creating a separate startup-config file for the later software version. With two such versions in place, you can easily reboot the switch with the correct startup-config file for either software version.

- *If the destination startup-config file already exists, it is overwritten by the content of the source startup-config file.*
- *If the destination startup-config file does not already exist, it will be created in the first empty configuration memory slot on the switch.*
- *If the destination startup-config file does not already exist, but there are no empty configuration memory slots on the switch, then a new startup-config file is not created and instead, the CLI displays the following error message:*
  Unable to copy configuration to "< *target-filename* >" .

For example, suppose both primary and secondary flash memory contain software release E.09.*xx* and use a startup-config file named **config1**:

```
ProCurve(config)# show config files

Configuration files:

 id | act pri sec | name
 ---+-------------+-------------------------------------------
  1 |  *   *   *  | config1
  2 |             |
  3 |             |
```

Figure 6-21. Example of Using One Startup-Config File for Both Primary and Secondary Flash

If you wanted to experiment with configuration changes to the software version in secondary flash, you could create and assign a separate startup-config file for this purpose.

```
ProCurve(config)# copy config config1 config config2
ProCurve(config)# startup-default secondary config config2
ProCurve(config)# show config files

Configuration files:

 id | act pri sec | name
 ---+-------------+-----------------
  1 |  *   *      | config1
  2 |          *  | config2
  3 |             |
```

The first two commands copy the **config1** startup-config file to **config2**, and then make **config2** the default startup-config file for booting from secondary flash.

Figure 6-22. Example of Creating and Assigning a New Startup-Config File

Note

You can also generate a new startup-config file by booting the switch from a flash memory location from which you have erased the currently assigned startup-config file. Refer to “Erasing a Startup-Config File” in the next section.

Erasing a Startup-Config File

You can erase any of the startup-config files in the switch's memory slots. In some cases, erasing a file causes the switch to generate a new, default-configuration file for the affected memory slot.

Syntax: erase < config < *filename* >> | startup-config >

config < *filename* >: *This option erases the specified startup-config file. If the specified file is not the currently active startup-config file, then the file is simply deleted from the memory slot it occupies. If the specified file is the currently active startup-config file, then the switch creates a new, default startup-config file with the same name as the erased file, and boots using this file. (This new startup-config file contains only the default configuration for the software version used in the reboot.)*

Note: *Where a file is assigned to either the primary or the secondary flash, but is not the currently active startup-config file, erasing the file does not remove the flash assignment from the memory slot for that file. Thus, if the switch boots using a flash location that does not have an assigned startup-config, then the switch creates a new, default startup-config file and uses this file in the reboot. (This new startup-config file contains only the default configuration for the software version used in the reboot.) Executing* **write memory** *after the reboot causes a switch-generated filename of* **config*x*** *to appear in the* **show config files** *display for the new file, where* ***x*** *corresponds to the memory slot number.*

startup-config: *This option erases the currently active startup-config file and reboots the switch from the currently active flash memory location. The erased startup-config file is replaced with a new startup-config file. The new file has the same filename as the erased file, but contains only the default configuration for the software version in the flash location (primary or secondary) used for the reboot. For example, suppose the last reboot was from primary flash using a configuration file named* **minconfig**. *Executing* **erase startup-config** *replaces the current content of* **minconfig** *with a default configuration and reboots the switch from primary flash.*

Figure 6-23 illustrates using **erase config < *filename* >** to remove a startup-config file.

```
ProCurve(config)# show config files

Configuration files:

 id | act pri sec | name
 ---+-------------+-------------------------------------------
  1 |  *   *      | minconfig
  2 |          *  | config2
  3 |             | config3

ProCurve(config)# erase config config3
ProCurve(config)# show config files

Configuration files:

 id | act pri sec | name
 ---+-------------+-------------------------------------------
  1 |  *   *      | minconfig
  2 |          *  | config2
  3 |             |
```

Figure 6-23. Example of Erasing a Non-Active Startup-Config File

With the same memory configuration as is shown in the bottom portion of figure 6-23, executing **erase startup-config** boots the switch from primary flash, resulting in a new file named minconfig in the same memory slot. The new file contains the default configuration for the software version currently in primary flash.

Using the Clear + Reset Button Combination To Reset the Switch to Its Default Configuration

The Clear + Reset button combination described in the *Installation and Getting Started Guide* produces different results, depending on which software release is stored in primary flash. That is, when you press the Clear + Reset button combination:

- **Scenario 1:** If the primary flash location has a software release that does not support multiple configuration files (that is, earlier than E.09.*xx*) and the switch is running on software release E.09.*xx* or greater in secondary flash, then the switch:
  - Overwrites the content of the startup-config file currently in memory slot 1 with the default configuration for the software version in primary flash. (The filename does not change.)

- Boots the switch from primary flash using the new (default) configuration in the startup-config file in memory slot 1. Since the primary flash in this instance does not support multiple configuration files, the multiple configuration feature does not operate until the switch is booted again using software release E.09.*xx* or greater.

This scenario does not affect any startup-config files in memory slots 2 or 3, and does not change the active, primary, and secondary assignments the switch is maintaining in the configuration for software release E.09.*xx* or greater. (Note that the same applies if the switch is running on the software release earlier than E.09.*xx* in primary flash.)

■ **Scenario 2:** If the primary flash location has a software version that supports multiple configuration files (release E.09.*xx* or greater), then the switch:

- Overwrites the content of the startup-config file currently in memory slot 1 with the default configuration for the software version in primary flash, and renames this file to **config1**.
- Erases any other startup-config files currently in memory.
- Configures the new file in memory slot 1 as the default for both primary and secondary flash locations (regardless of the software version currently in secondary flash).
- Boots the switch from primary flash using the new startup-config file.

```
ProCurve Switch 5304XL# sho config files

Configuration files:

 id | act pri sec | name
 ---+-------------+------------
  1 |  *   *   *  | config1
  2 |             |
  3 |             |
```

When the software version in the primary flash supports multiple configuration files, pressing Clear + Reset:

- Replaces all startup-config files with a single file named **config1** that contains the default configuration for the software version in primary flash.
- Resets the Active, Primary, and Secondary assignments as shown here.

Figure 6-24. Example of Clear + Reset Result from Scenario 2 on Page

Transferring Startup-Config Files To or From a Remote Server

Command	Page
copy config < *src-file* > tftp < *ip-addr* > < *remote-file* > < pc | unix >	below
copy tftp config < *dest-file* > < *ip-addr* > < *remote-file* > < pc | unix >	below
copy config < *src-file* > xmodem < pc | unix >	6-38
copy xmodem config < *dest-file* > < pc | unix >	6-38

TFTP: Copying a Configuration File to a Remote Host

Syntax: copy config < *src-file* > tftp < *ip-addr* > < *remote-file* > < pc | unix >

This is an addition to the copy tftp command options existing in releases prior to E.09.xx. Use this command to upload a configuration file from the switch to a TFTP server.

For more on using TFTP to copy a file to a remote server, refer to "TFTP: Copying a Configuration File to a Remote Host" on page A-24.

For example, the following command copies a startup-config file named **test-01** from the switch to a (UNIX) TFTP server at IP address 10.10.28.14:

```
ProCurve(config)# copy config test-01 tftp 10.10.28.14
test-01.txt unix
```

TFTP: Copying a Configuration File from a Remote Host

Syntax: copy tftp config < *dest-file* > < *ip-addr* > < *remote-file* > < pc | unix >

This is an addition to the copy tftp command options existing in releases prior to E.09.xx. Use this command to download a configuration file from a TFTP server to the switch.

Note: This command requires an empty memory slot in the switch. If there are no empty memory slots, the CLI displays the following message:

Unable to copy configuration to "< filename >".

For more on using TFTP to copy a file from a remote host, refer to "TFTP: Copying a Configuration from a Remote Host" on page A-23.

For example, the following command copies a startup-config file named **test-01.txt** from a (UNIX) TFTP server at IP address 10.10.28.14 to the first empty memory slot in the switch:

```
ProCurve(config)# copy tftp config test-01 10.10.28.14
test-01.txt  unix
```

Xmodem: Copying a Configuration File to a Serially Connected Host

Syntax: copy config < *filename* > xmodem < pc | unix >

This is an addition to the **copy < *config* > xmodem** *command options existing in releases prior to E.09.xx. Use this command to upload a configuration file from the switch to an Xmodem host.*

For more on using Xmodem to copy a file to a serially connected host, refer to "Xmodem: Copying a Configuration File from the Switch to a Serially Connected PC or UNIX Workstation" on page A-27.

Xmodem: Copying a Configuration from a Serially Connected Host

Syntax: copy xmodem config < *dest-file* > < pc | unix >

This is an addition to the **copy xmodem** *command options existing in releases prior to E.09.xx. Use this command to download a configuration file from an Xmodem host to the switch.*

For more on using Xmodem to copy a file from a serially connected host, refer to "Xmodem: Copying a Configuration File from a Serially Connected PC or UNIX Workstation" on page A-27.

Operating Notes for Multiple Configuration Files

- SFTP/SCP: The configuration files are available for sftp/scp transfer as **/cfg/< *filename* >**.
- If you retain a software version earlier than E.09.*xx* on the switch, always reserve the first config memory slot (**id** = **1**) for a configuration compatible with the earlier version. This is because, software versions earlier than E.09.*xx* always use the startup-config file in slot 1 to boot the switch.

—This page is intentionally unused—

7

Interface Access and System Information

Contents

Overview 7-2

Interface Access: Console/Serial Link, Web, and Inbound Telnet . 7-3

Menu: Modifying the Interface Access 7-4

CLI: Modifying the Interface Access 7-5

Denying Interface Access by Terminating Remote Management Sessions 7-8

System Information 7-9

Menu: Viewing and Configuring System Information 7-10

CLI: Viewing and Configuring System Information 7-11

Web: Configuring System Parameters 7-14

Overview

This chapter describes how to:

- View and modify the configuration for switch interface access
- Use the CLI **kill** command to terminate a remote session
- View and modify switch system information

For help on how to actually use the interfaces built into the switch, refer to:

- Chapter 3, “Using the Menu Interface”
- Chapter 4, “Using the Command Line Interface (CLI)”
- Chapter 5, Using the Web Browser Interface”

Why Configure Interface Access and System Information? The interface access features in the switch operate properly by default. However, you can modify or disable access features to suit your particular needs. Similarly, you can choose to leave the system information parameters at their default settings. However, modifying these parameters can help you to more easily distinguish one device from another in your network.

Interface Access: Console/Serial Link, Web, and Inbound Telnet

Interface Access Features

Feature	Default	Menu	CLI	Web
Inactivity Time	0 Minutes (disabled)	page 7-4	page 7-6	—
Inbound Telnet Access	Enabled	page 7-4	page 7-5	—
Outbound Telnet Access	n/a	—	page 7-6	—
Web Browser Interface Access	Enabled	page 7-4	page 7-6	—
Terminal type	VT-100	—	page 7-6	—
Event Log event types to list (Displayed Events)	All	—	page 7-6	—
Baud Rate	Speed Sense	—	page 7-6	—
Flow Control	XON/XOFF	—	page 7-6	—

In most cases, the default configuration is acceptable for standard operation.

Note

Basic switch security is through passwords. You can gain additional security by using the security features described in the Access Security Guide for your switch. You can also simply block unauthorized access via the web browser interface or Telnet (as described in this section) and installing the switch in a locked environment.

Menu: Modifying the Interface Access

The menu interface enables you to modify these parameters:

- Inactivity Timeout
- Inbound Telnet Enabled
- Web Agent Enabled

To Access the Interface Access Parameters:

1. From the Main Menu, Select...

   2. Switch Configuration...

   1. System Information

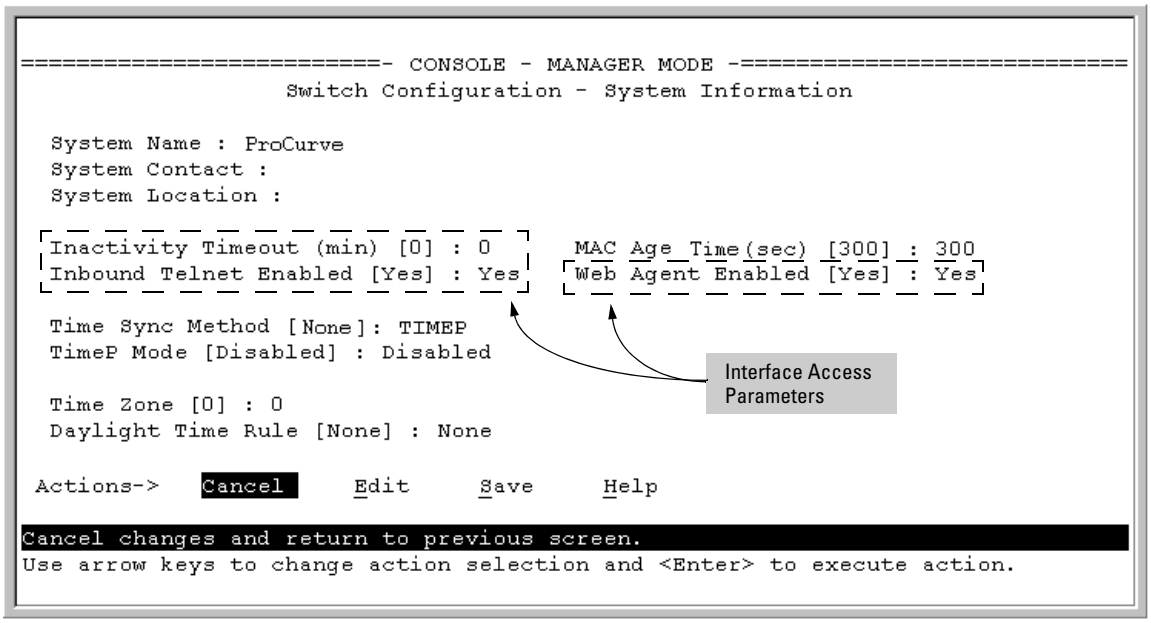

Figure 7-1. The Default Interface Access Parameters Available in the Menu Interface

2. Press **[E]** (for Edit). The cursor moves to the **System Name** field.
3. Use the arrow keys (↓, ↑, ←, →) to move to the parameters you want to change.

   Refer to the online help provided with this screen for further information on configuration options for these features.
4. When you have finished making changes to the above parameters, press **[Enter]**, then press **[S]** (for **Save**).

CLI: Modifying the Interface Access

Interface Access Commands Used in This Section

show console	below
[no] telnet-server	below
[no] web-management	page 7-6
console	page 7-6

Listing the Current Console/Serial Link Configuration. This command lists the current interface access parameter settings.

Syntax: show console

This example shows the switch's default console/serial configuration.

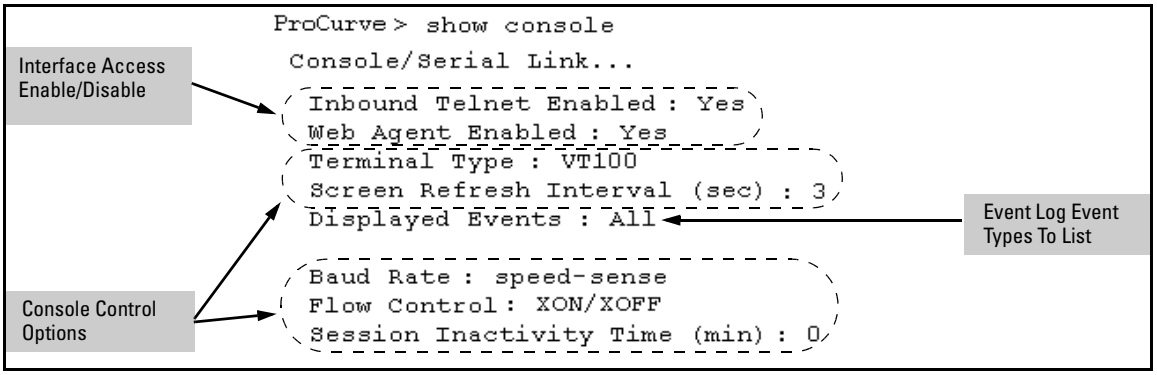

Figure 7-2. Listing of Show Console Command

Reconfigure Inbound Telnet Access. In the default configuration, inbound Telnet access is enabled.

Syntax: [no] telnet-server

To disable inbound Telnet access:

```
ProCurve(config)# no telnet-server
```

To re-enable inbound Telnet access:

```
ProCurve(config)# telnet-server
```

Outbound Telnet to Another Device. This feature operates independently of the telnet-server status and enables you to Telnet to another device that has an IP address.

Syntax: telnet < *ip-address* >

For example:

```
ProCurve # telnet 10.28.27.204
```

Reconfigure Web Browser Access. In the default configuration, web browser access is enabled.

Syntax: [no] web-management

To disable web browser access:

```
ProCurve(config)# no web-management
```

To re-enable web browser access:

```
ProCurve(config)# web-management
```

Reconfigure the Console/Serial Link Settings. You can reconfigure one or more console parameters with one console command.

Syntax: console
[terminal < vt100 | ansi | none >]
[screen-refresh < 1 | 3 | 5 | 10 | 20 | 30 | 45 | 60 >]
[baud-rate
< speed-sense | 1200 | 2400 | 4800 | 9600 | 19200 |38400 | 57600 | 1155200 >]
[flow-control < xon/xoff | none >]
[inactivity-timer < 0 | 1 | 5 | 10 | 15 | 20 | 30 | 60 |120 >]
[events <none | all | non-info | critical | debug]
[local-terminal <vt 100 | none | ansi>]

Note

If you change the Baud Rate or Flow Control settings for the switch, you should make the corresponding changes in your console access device. Otherwise, you may lose connectivity between the switch and your terminal emulator due to differences between the terminal and switch settings for these two parameters.

All console parameter changes except **events** require that you save the configuration with **write memory** and then execute **boot** before the new console configuration will take effect.

For example, to use one command to configure the switch with the following:

- VT100 operation
- 19,200 baud
- No flow control
- 10-minute inactivity time
- Critical log events

you would use the following command sequence:

```
ProCurve(config)# console terminal vt100 baud-rate 19200 flow-control none
inactivity-timer 10 events critical
Command will take effect after saving configuration and reboot.
ProCurve(config)# write memory
ProCurve(config)# reload
```

The switch implements the Event Log change immediately. The switch implements the other console changes after executing **write memory** and **reload**.

Figure 7-3. Example of Executing the Console Command with Multiple Parameters

You can also execute a series of console commands and then save the configuration and boot the switch. For example:

Configure the individual parameters.

```
ProCurve(config)# console baud-rate speed-sense
Command will take effect after saving configuration and reboot

ProCurve(config)# console flow-control xon/xoff
Command will take effect after saving configuration and reboot

ProCurve(config)# console inactivity-timer 0
Command will take effect after saving configuration and reboot
```

Save the changes.

Boot the switch.

```
ProCurve(config)# write memory
ProCurve(config)# reload
```

Figure 7-4. Example of Executing a Series of Console Commands

Denying Interface Access by Terminating Remote Management Sessions

The switch supports up to four management sessions. You can use **show ip ssh** to list the current management sessions, and **kill** to terminate a currently running remote session. (**Kill** does not terminate a Console session on the serial port, either through a direct connection or via a modem.)

Syntax: kill [< *session-number* >]

For example, if you are using the switch's serial port for a console session and want to terminate a currently active Telnet session, you would do the following:

```
ProCurve(config)# show ip ssh
  SSH Enabled             : Yes

  IP Port Number          : 22
  Timeout (sec)           : 120
  Server Key Size (bits)  : 512

  Ses Type     Source IP and Port
  --- -------- ---------------------
  1   console
  2   telnet
  3   ssh      15.30.252.195:1531
  4   inactive

ProCurve(config)# kill 2
ProCurve(config)# show ip ssh
  SSH Enabled             : Yes

  IP Port Number          : 22
  Timeout (sec)           : 120
  Server Key Size (bits)  : 512

  Ses Type     Source IP and Port
  --- -------- ---------------------
  1   console
  2   inactive
  3   ssh      15.30.252.195:1531
  4   inactive
```

Session 2 is an active Telnet session.

The kill 2 command terminates session 2.

Figure 7-5. Example of Using the "Kill" Command To Terminate a Remote Session

System Information

System Information Features

Feature	Default	Menu	CLI	Web
System Name	*switch product name*	page 7-10	page 7-12	page 7-14
System Contact	n/a	page 7-10	page 7-12	page 7-14
System Location	n/a	page 7-10	page 7-12	page 7-14
MAC Age Time	300 seconds	page 7-10	page 7-13	—
Time Sync Method	None	See Chapter 9, “Time Protocols”.		
Time Zone	0	page 7-10	page 7-13	—
Daylight Time Rule	None	page 7-10	page 7-13	—
Time	January 1, 1990 at 00:00:00 at last power reset	—	page 7-13	—

Configuring system information is optional, but recommended.

System Name: Using a unique name helps you to identify individual devices where you are using an SNMP network management tool such as ProCurve Manager.

System Contact and Location: This information is helpful for identifying the person administratively responsible for the switch and for identifying the locations of individual switches.

MAC Age Time: The number of seconds a MAC address the switch has learned remains in the switch’s address table before being aged out (deleted). Aging out occurs when there has been no traffic from the device belonging to that MAC address for the configured interval.

Time Sync Method: Selects the method (TimeP or SNTP) the switch will use for time synchronization. For more on this topic, refer to Chapter 9, “Time Protocols”.

Time Zone: The number of minutes your time zone location is to the West (+) or East (-) of Coordinated Universal Time (formerly GMT). The default **0** means no time zone is configured. For example, the time zone for Berlin, Germany is + 60 (minutes) and the time zone for Vancouver, Canada is - 480 (minutes).

Daylight Time Rule: Specifies the daylight savings time rule to apply for your location. The default is **None**. (For more on this topic, see appendix D, "Daylight Savings Time on ProCurve Switches.)

Time: Used in the CLI to specify the time of day, the date, and other system parameters.

Menu: Viewing and Configuring System Information

To access the system information parameters:

1. From the Main Menu, Select...
   2. Switch Configuration...
      1. System Information

```
==========================- CONSOLE - MANAGER MODE -============================
                    Switch Configuration - System Information

  System Name : ProCurve
  System Contact :
  System Location :

  Inactivity Timeout (min) [0] : 0      MAC Age Time(sec) [300] : 300
  Inbound Telnet Enabled [Yes] : Yes     Web Agent Enabled [Yes] : Yes

  Time Sync Method [None]: TIMEP
  TimeP Mode [Disabled] : Disabled

  Time Zone [0] : 0
  Daylight Time Rule [None] : None

 Actions->   Cancel     Edit     Save     Help

Cancel changes and return to previous screen.
Use arrow keys to change action selection and <Enter> to execute action.
```

System Information

Figure 7-6. The System Information Configuration Screen (Default Values)

Note

To help simplify administration, it is recommended that you configure **System Name** to a character string that is meaningful within your system.

2. Press **[E]** (for Edit). The cursor moves to the **System Name** field.
3. Refer to the online help provided with this screen for further information on configuration options for these features.
4. When you have finished making changes to the above parameters, press **[Enter]**, then press **[S]** (for **Save**) and return to the Main Menu.

CLI: Viewing and Configuring System Information

System Information Commands Used in This Section

show system-information	below
hostname	below
snmp-server [contact] [location]	below
mac-age-time	page 7-13
time	
timezone	page 7-13
daylight-time-rule	page 7-13
date time	page 7-13

Listing the Current System Information. This command lists the current system information settings.

Syntax: show system-information

This example shows the switch's default console configuration.

```
ProCurve > show system-information
 Status and Counters - General System Information
  System Name         : HP switch
  System Contact      :
  System Location     :
  MAC Age Time (sec)  : 300
  Time Zone           : 0
  Daylight Time Rule  : None
```

Figure 7-7. Example of CLI System Information Listing

Configure a System Name, Contact, and Location for the Switch. To help distinguish one switch from another, configure a plain-language identity for the switch.

Syntax: hostname < *name-string* >
snmp-server [contact <*system-contact*>] [location <*system-location*>]

Both fields allow up to 48 characters. *Blank spaces* are not allowed in the variables for these commands.

For example, to name the switch "Blue" with "Next-4474" as the system contact, and "North-Data-Room" as the location:

```
ProCurve(config)# hostname Blue
Blue(config)# snmp-server contct Ext-4474 location North-Data-Room
Blue(config)# show system-information

 Status and Counters - General System Information

 System Name         : Blue
 System Contact      : Ext-4474
 System Location     : North-Data-Room

 MAC Age Time (sec)  : 300

 Time Zone           : 0
 Daylight Time Rule  : None


 Firmware revision   : E.08.30          Base MAC Addr       : 0001e7-a0ec00
 ROM Version         : E.05.04          Serial Number       : S000394041


 Up Time             : 14 mins          Memory   - Total    : 25,038,312
 CPU Util (%)        : 1                           Free     : 20,087,448

 IP Mgmt   - Pkts Rx : 0                Packet   - Total    : 832
             Pkts Tx : 0                Buffers    Free     : 783
                                                   Lowest   : 768
-- MORE --, next page: Space, next line: Enter, quit: Control-C
```

New hostname, contact, and location data from previous commands.

Additional System Information

Figure 7-8. System Information Listing After Executing the Preceding Commands

Reconfigure the MAC Age Time for Learned MAC Addresses. This command corresponds to the MAC Age Interval in the menu interface, and is expressed in seconds.

Syntax: mac-age-time < 10 - 1000000 > *(seconds)*

For example, to configure the age time to seven minutes:

```
ProCurve(config)# mac-age-time 420
```

Configure the Time Zone and Daylight Time Rule. These commands:

- Set the time zone you want to use
- Define the daylight time rule for keeping the correct time when daylight-saving-time shifts occur.

Syntax: time timezone < -720 - 840 >
time daylight-time-rule < none | alaska | continental-us-and-canada | middle-europe-and-portugal | southern-hemisphere | western-europe | user-defined>

East of the 0 meridian, the sign is "+". West of the 0 meridian, the sign is "-".

For example, the time zone setting for Berlin, Germany is +60 (zone +1, or 60 minutes), and the time zone setting for Vancouver, Canada is -480 (zone -8, or -480 minutes). To configure the time zone and daylight time rule for Vancouver, Canada:

```
ProCurve(config)# time timezone -480
daylight-time-rule continental-us-and-canada
```

Configure the Time and Date. The switch uses the time command to configure both the time of day and the date. Also, executing time without parameters lists the switch's time of day and date. Note that the CLI uses a 24-hour clock scheme; that is, hour (*hh*) values from 1 p.m. to midnight are input as 13 - 24, respectively.

Syntax: time [*hh*:*mm* [:*ss*]] [*mm/dd/*[*yy*] *yy*]

For example, to set the switch to 9:45 a.m. on November 17, 2002:

```
ProCurve(config)# time 9:45 11/17/02
```

Note

Executing **reload** or **boot** resets the time and date to their default startup values.

Web: Configuring System Parameters

In the web browser interface, you can enter the following system information:

- System Name
- System Location
- System Contact

For access to the MAC Age Interval and the Time parameters, use the menu interface or the CLI.

Configure System Parameters in the Web Browser Interface.

1. Click on the **Configuration** tab.
2. Click on **[System Info]**.
3. Enter the data you want in the displayed fields.
4. Implement your new data by clicking on **[Apply Changes]**.

To access the web-based help provided for the switch, click on **[?]** in the web browser screen.

8

Configuring IP Addressing

Contents

Overview 8-2

IP Configuration 8-2

Just Want a Quick Start with IP Addressing? 8-3

IP Addressing with Multiple VLANs 8-4

Menu: Configuring IP Address, Gateway, and Time-To-Live (TTL) . . 8-5

CLI: Configuring IP Address, Gateway, and Time-To-Live (TTL) 8-6

Web: Configuring IP Addressing 8-10

How IP Addressing Affects Switch Operation 8-11

DHCP/Bootp Operation 8-12

Network Preparations for Configuring DHCP/Bootp 8-14

IP Preserve: Retaining VLAN-1 IPAddressing Across Configuration File Downloads 8-15

Operating Rules for IP Preserve 8-16

Enabling IP Preserve 8-16

Overview

You can configure IP addressing through all of the switch's interfaces. You can also:

- Easily edit a switch configuration file to allow downloading the file to multiple switches without overwriting each switch's unique gateway and VLAN 1 IP addressing.
- Assign up to eight IP addresses to a VLAN (multinetting).

Why Configure IP Addressing? In its factory default configuration, the switch operates as a multiport learning bridge with network connectivity provided by the ports on the switch. However, to enable specific management access and control through your network, you will need IP addressing. Table 8-1 on page 8-11 shows the switch features that depend on IP addressing to operate.

IP Configuration

IP Configuration Features

Feature	Default	Menu	CLI	Web
IP Address and Subnet Mask	DHCP/Bootp	page 8-5	page 8-6	page 8-10
Multiple IP Addresses on a VLAN	n/a	—	page 8-8	—
Default Gateway Address	none	page 8-5	page 8-6	page 8-10
Packet Time-To-Live (TTL)	64 seconds	page 8-5	page 8-6	—
Time Server (Timep)	DHCP	page 8-5	page 8-6	—

IP Address and Subnet Mask. Configuring the switch with an IP address expands your ability to manage the switch and use its features. By default, the switch is configured to automatically receive IP addressing on the default VLAN from a DHCP/Bootp server that has been configured correctly with information to support the switch. (Refer to "DHCP/Bootp Operation" on page 8-12 for information on setting up automatic configuration from a server.) However, if you are not using a DHCP/Bootp server to configure IP addressing,

use the menu interface or the CLI to manually configure the initial IP values. After you have network access to a device, you can use the web browser interface to modify the initial IP configuration if needed.

For information on how IP addressing affects switch operation, refer to "How IP Addressing Affects Switch Operation" on page 8-11.

Multinetting: Assigning Multiple IP Addresses to a VLAN. For a given VLAN you can assign up to eight IP addresses. This allows you to combine two or more subnets on the same VLAN, which enables devices in the combined subnets to communicate normally through the network without needing to reconfigure the IP addressing in any of the combined subnets.

Default Gateway Operation. The default gateway is required when a router is needed for tasks such as reaching off-subnet destinations or forwarding traffic across multiple VLANs. The gateway value is the IP address of the next-hop gateway node for the switch, which is used if the requested destination address is not on a local subnet/VLAN. If the switch does not have a manually-configured default gateway and DHCP/Bootp is configured on the primary VLAN, then the default gateway value provided by the DHCP or Bootp server will be used. If the switch has a manually configured default gateway, then the switch uses his gateway, even if a different gateway is received via DHCP or Bootp on the primary VLAN. This is also true for manually configured TimeP, SNTP, and Time-To-Live(TTL). (In the default configuration, VLAN 1 is the Primary VLAN.) Refer to the information on Primary VLANs in the *Advanced Traffic Management Guide* for your switch.

Packet Time-To-Live (TTL) . This parameter specifies the maximum number of routers (hops) through which a packet can pass before being discarded. Each router decreases a packet's TTL by 1 before forwarding the packet. If decreasing the TTL causes the TTL to be 0, the router drops the packet instead of forwarding it. In most cases, the default setting (64) is adequate.

Just Want a Quick Start with IP Addressing?

If you just want to give the switch an IP address so that it can communicate on your network, or if you are not using VLANs, ProCurve recommends that you use the Switch Setup screen to quickly configure IP addressing. To do so, do one of the following:

- Enter `setup` at the CLI Manager level prompt.

  ```
  ProCurve# setup
  ```

- Select **8. Run Setup** in the Main Menu of the menu interface.

For more on using the Switch Setup screen, see the *Installation and Getting Started Guide* you received with the switch.

IP Addressing with Multiple VLANs

In the factory-default configuration, the switch has one, permanent default VLAN (named DEFAULT_VLAN) that includes all ports on the switch. Thus, when only the default VLAN exists in the switch, if you assign an IP address and subnet mask to the switch, you are actually assigning the IP addressing to the DEFAULT_VLAN.

Notes

- If multiple VLANs are configured, then each VLAN can have its own IP address. This is because each VLAN operates as a separate broadcast domain and requires a unique IP address and subnet mask. A default gateway (IP) address for the switch is optional, but recommended.
- In the factory-default configuration, the default VLAN (named DEFAULT_VLAN) is the switch's *primary* VLAN. The switch uses the primary VLAN for learning the default gateway address. The switch can also learn other settings from a DHCP or Bootp server, such as (packet) Time-To-Live (TTL), and Timep or SNMP settings. (Other VLANs can also use DHCP or BootP to acquire IP addressing. However, the switch's gateway, TTL, and TimeP or SNTP values, which are applied globally, and not per-VLAN, will be acquired through the primary VLAN only, unless manually set by using the CLI, Menu, or web browser interface.(If these parameters are manually set, they will *not* be overwritten by alternate values received from a DHCP or Bootp server.) For more on VLANs, refer to the chapter titled "Static Virtual LANs" in the *Advanced Traffic Management Guide* for your switch.
- The IP addressing used in the switch should be compatible with your network. That is, the IP address must be unique and the subnet mask must be appropriate for your IP network.
- If you change the IP address through either Telnet access or the web browser interface, the connection to the switch will be lost. You can reconnect by either restarting Telnet with the new IP address or entering the new address as the URL in your web browser.

Menu: Configuring IP Address, Gateway, and Time-To-Live (TTL)

Do one of the following:

- To manually enter an IP address, subnet mask, set the **IP Config** parameter to **Manual** and then manually enter the IP address and subnet mask values you want for the switch.
- To use DHCP or Bootp, use the menu interface to ensure that the **IP Config** parameter is set to **DHCP/Bootp**, then refer to "DHCP/Bootp Operation" on page 8-12.

To Configure IP Addressing.

1. From the Main Menu, Select.

   2. Switch Configuration …

   5. IP Configuration

Notes

If multiple VLANs are configured, a screen showing all VLANs appears instead of the following screen.

The Menu interface displays the IP address for any VLAN. If you use the CLI to configure the IP address on a VLAN, use the CLI **show ip** command to list them. (Refer to "Viewing the Current IP Configuration" on page 8-6.)

For descriptions of these parameters, see the online Help for this screen.

Before using the DHCP/Bootp option, refer to "DHCP/Bootp Operation" on page 8-12.

```
=========================- CONSOLE - MANAGER MODE -============================
                  Switch Configuration - Internet (IP) Service


  Default Gateway :
  Default TTL     : 64

  IP Config [DHCP/Bootp] : Manual
  IP Address  : 15.30.248.184
  Subnet Mask : 255.255.248.0

 Actions->   Cancel     Edit     Save     Help

Cancel changes and return to previous screen.
Use arrow keys to change action selection and <Enter> to execute action.
```

Figure 8-1. Example of the IP Service Configuration Screen without Multiple VLANs Configured

2. Press **[E]** (for **Edit**).

3. If the switch needs to access a router, for example, to reach off-subnet destinations, select the **Default Gateway** field and enter the IP address of the gateway router.
4. If you need to change the packet Time-To-Live (TTL) setting, select **Default TTL** and type in a value between 2 and 255.
5. To configure IP addressing, select **IP Config** and do one of the following:
   - If you want to have the switch retrieve its IP configuration from a DHCP or Bootp server, at the **IP Config** field, keep the value as **DHCP/ Bootp** and go to step 8.
   - If you want to manually configure the IP information, use the Space bar to select **Manual** and use the **[Tab]** key to move to the other IP configuration fields.
6. Select the **IP Address** field and enter the IP address for the switch.
7. Select the **Subnet Mask** field and enter the subnet mask for the IP address.
8. Press **[Enter]**, then **[S]** (for **Save**).

CLI: Configuring IP Address, Gateway, and Time-To-Live (TTL)

IP Commands Used in This Section	Page
show ip	8-6
ip address < *mask-length* >	8-7, 8-8
ip address /< *mask-bits* >	8-7, 8-8
ip default-gateway	8-10
ip ttl	8-10

Viewing the Current IP Configuration.

Syntax: show ip

This command displays the IP addressing for each VLAN configured in the switch. If only the DEFAULT_VLAN exists, then its IP configuration applies to all ports in the switch. Where multiple VLANs are configured, the IP addressing is listed per VLAN. The display includes switch-wide packet time-to-live, and (if configured) the switch's default gateway and Timep configuration.

(You can also use the **show management** command to display the IP addressing and time server IP addressing configured on the switch. Refer to figure 9-6 on page 9-10.)

For example, in the factory-default configuration (no IP addressing assigned), the switch's IP addressing appears as:

The Default IP Configuration

```
ProCurve> show ip
 Internet (IP) Service
  Default Gateway :
  Default TTL     : 64
  Arp Age         : 20

  TimeP Config : DHCP    TimeP Poll Interval (min) : 720

  VLAN         | IP Config  IP Address      Subnet Mask
  ------------ + ---------- --------------- ---------------
  DEFAULT_VLAN | DHCP/Bootp
```

Figure 8-2. Example of the Switch's Default IP Addressing

With multiple VLANs and some other features configured, **show ip** provides additional information:

A Switch with IP Addressing and VLANs Configured

```
ProCurve> show ip
 Internet (IP) Service

  IP Routing : Disabled

  Default Gateway : 10.28.227.1
  Default TTL     : 64
  VLAN         | IP Config  IP Address      Subnet Mask
  ------------ + ---------- --------------- ---------------
  DEFAULT_VLAN | Manual     10.28.227.101   255.255.248.0
  VLAN_2       | Disabled
```

Figure 8-3. Example of Show IP Listing with Non-Default IP Addressing Configured

Configure an IP Address and Subnet Mask. The following command includes both the IP address and the subnet mask. You must either include the ID of the VLAN for which you are configuring IP addressing or go to the context configuration level for that VLAN. (If you are not using VLANs on the switch—that is, if the only VLAN is the default VLAN—then the VLAN ID is always "1".)

Note

The default IP address setting for the DEFAULT_VLAN is **DHCP/Bootp**. On additional VLANs you create, the default IP address setting is **Disabled**.

Syntax: [no] vlan < *vlan-id* > ip address *<ip-address/mask-length>*
or
[no] vlan < *vlan-id* > ip address < *ip-address* > < *mask-bits* >
or
vlan < *vlan-id* > ip address *dhcp-bootp*

This example configures IP addressing on the default VLAN with the subnet mask specified in mask bits.

```
ProCurve(config)# vlan 1 ip address 10.28.227.103 255.255.255.0
```

This example configures the same IP addressing as the preceding example, but specifies the subnet mask by mask length.

```
ProCurve(config)# vlan 1 ip address 10.28.227.103/24
```

This example deletes an IP address configured in VLAN 1.

```
ProCurve (config) no vlan 1 ip address 10.28.227.103/24
```

Configure Multiple IP Addresses on a VLAN (Multinetting). You can configure up to eight IP addresses for the same VLAN. That is, the switch enables you to assign up to eight networks to a VLAN.

- Each IP address on a VLAN must be for a separate subnet.
- The switch allows up to 512 secondary subnet address assignments to VLANs.

Syntax: [no] vlan < *vlan-id* > ip address < *ip-address/mask-length* >
[no] vlan < *vlan-id* > ip address < *ip-address* > < *mask-bits* >

For example, if you wanted to multinet VLAN_20 (VID = 20) with the IP addresses shown below, you would perform steps similar to the following. (For this example, assume that the first IP address is already configured.)

IP Address	VID	IP Address	Subnet Mask
1st address	20	10.25.33.101	255.255.240.0
2nd address	20	10.26.33.101	255.255.240.0
3rd address	20	10.27.33.101	255.255.240.0

1. Go to VLAN 20.
2. Configure two additional IP addresses on VLAN 20.
3. Display IP addressing.

```
ProCurve(config)# vlan 20
ProCurve(vlan-20)# ip address 10.26.33.101/20
ProCurve(vlan-20)# ip address 10.27.33.101/20

ProCurve(vlan-20)# show ip
 Internet (IP) Service
  IP Routing : Disabled

  Default Gateway :
  Default TTL     : 64
  Arp Age         : 20

  VLAN         | IP Config  IP Address      Subnet Mask
  ------------ + ---------- --------------- ---------------
  DEFAULT_VLAN | Manual     10.20.30.100    255.255.240.0
  VLAN_20      | Manual     10.25.33.101    255.255.240.0
               | Manual     10.26.33.101    255.255.240.0
               | Manual     10.27.33.101    255.255.240.0
```

Figure 8-4. Example of Configuring and Displaying a Multinetted VLAN

If you then wanted to multinet the default VLAN, you would do the following:

```
ProCurve(vlan-20)# vlan 1
ProCurve(vlan-1)# ip address 10.21.30.100/20
ProCurve(vlan-1)# show ip
 Internet (IP) Service
  IP Routing : Disabled

  Default Gateway :
  Default TTL     : 64
  Arp Age         : 20

  VLAN         | IP Config  IP Address      Subnet Mask
  ------------ + ---------- --------------- ---------------
  DEFAULT_VLAN | Manual     10.20.30.100    255.255.240.0
               | Manual     10.21.30.100    255.255.240.0
  VLAN_20      | Manual     10.25.33.101    255.255.240.0
               | Manual     10.26.33.101    255.255.240.0
               | Manual     10.27.33.101    255.255.240.0
```

Figure 8-5. Example of Multinetting on the Default VLAN

Note

The Internet (IP) Service screen in the Menu interface (figure 8-1 on page 8-5) displays the first IP address for each VLAN. You must use the CLI **show ip** command to display the full IP address listing for multinetted VLANs.

Removing or Replacing IP Addresses in a Multinetted VLAN. To remove an IP address from a multinetted VLAN, use the **no** form of the IP address command shown on page 8-8. Generally, to replace one IP address with another, you should first remove the address you want to replace, and then enter the new address.

Configure the Optional Default Gateway. Using the Global configuration level, you can manually assign one default gateway to the switch. (The switch does *not* allow IP addressing received from a DHCP or Bootp server to replace a manually configured default gateway.)

Syntax: ip default-gateway < *ip-address* >

For example:

```
ProCurve(config)# ip default-gateway 10.28.227.115
```

Note

The switch uses the IP default gateway only while operating as a Layer 2 device. While routing is enabled on the switch, the IP default gateway is not used. Thus, to avoid loss of Telnet access to off-subnet management stations, you should use the **ip route** command to configure a static (default) route before enabling routing. Refer to chapter 16, “IP Routing Features”, for more information.

Configure Time-To-Live (TTL). The maximum number of routers (hops) through which a packet can pass before being discarded. (The default is 64.) Each router decreases a packet’s TTL by 1 before forwarding the packet. If a router decreases the TTL to 0, the router drops the packet instead of forwarding it.

Syntax: ip ttl *<number-of-hops>*

```
ProCurve(config)# ip ttl 60
```

In the CLI, you can execute this command only from the global configuration level. The TTL default is 64, and the range is 2 - 255.

Web: Configuring IP Addressing

You can use the web browser interface to access IP addressing only if the switch already has an IP address that is reachable through your network.

1. Click on the Configuration tab.
2. Click on **[IP Configuration]**.

3. If you need further information on using the web browser interface, click on **[?]** to access the web-based help available for the switch.

How IP Addressing Affects Switch Operation

Without an IP address and subnet mask compatible with your network, the switch can be managed only through a direct terminal device connection to the Console RS-232 port. You can use direct-connect console access to take advantage of features that do not depend on IP addressing. However, to realize the full capabilities ProCurve proactive networking offers through the switch, configure the switch with an IP address and subnet mask compatible with your network. The following table lists the general features available with and without a network-compatible IP address configured.

Table 8-1. Features Available With and Without IP Addressing on the Switch

Features Available Without an IP Address	Additional Features Available with an IP Address and Subnet Mask
• Direct-connect access to the CLI and the menu interface. • Stacking Candidate or Stack Member (Series 3400cl and Series 6400cl switches only) • DHCP or Bootp support for automatic IP address configuration, and DHCP support for automatic Timep server IP address configuration • Spanning Tree Protocol • Port settings and port trunking • Switch meshing • Console-based status and counters information for monitoring switch operation and diagnosing problems through the CLI or menu interface. • VLANs and GVRP • Serial downloads of software updates and configuration files (Xmodem) • Link test • Port monitoring • Password authentication • Quality of Service (QoS) • Authorized IP manager security	• Web browser interface access, with configuration, security, and diagnostic tools, plus the Alert Log for discovering problems detected in the switch along with suggested solutions • SNMP network management access such as ProCurve Manager for network configuration, monitoring, problem-finding and reporting, analysis, and recommendations for changes to increase control and uptime • TACACS+, RADIUS, SSH, SSL, and 802.1x authentication • Multinetting on VLANs • Stacking Commander* • Telnet access to the CLI or the menu interface • IGMP • TimeP and SNTP server configuration • TFTP download of configurations and software updates • Access Control Lists (ACLs) • IP routing, Multicast Routing • XRRP router redundancy • PIM-DM (Series 5300xl switches only) • NAT (Series 5300xl switches only) • Ping test

*Although a Commander can operate without an Ip address, doing so makes it unavailable for in-band access in an IP network.

DHCP/Bootp Operation

Overview. DHCP/Bootp is used to provide configuration data from a DHCP or Bootp server to the switch. This data can be the IP address, subnet mask, default gateway, Timep Server address, and TFTP server address. If a TFTP server address is provided, this allows the switch to TFTP a previously saved configuration file from the TFTP server to the switch. With either DHCP or Bootp, the servers must be configured prior to the switch being connected to the network.

Note

The switches covered by this guide are compatible with both DHCP and Bootp servers.

The DHCP/Bootp Process. Whenever the **IP Config** parameter in the switch or in an individual VLAN in the switch is configured to **DHCP/Bootp** (the default), or when the switch is rebooted with this configuration:

1. DHCP/Bootp requests are automatically broadcast on the local network. (The switch sends one type of request to which either a DHCP or Bootp server can respond.)
2. When a DHCP or Bootp server receives the request, it replies with a previously configured IP address and subnet mask for the switch. The switch also receives an IP Gateway address if the server has been configured to provide one. In the case of Bootp, the server must first be configured with an entry that has the switch's MAC address. (To determine the switch's MAC address, see appendix D, "MAC Address Management".) The switch properly handles replies from either type of server. If multiple replies are returned, the switch tries to use the first reply.)

Note

If you manually configure default gateway, TTL, TimeP, and/or SNTP parameters on the switch, it ignores any values received for the same parameters via DHCP or Bootp.

If the switch is initially configured for DHCP/Bootp operation (the default), or if it reboots with this configuration, it begins sending request packets on the network. If the switch does not receive a reply to its DHCP/Bootp requests, it continues to periodically send request packets, but with decreasing frequency. Thus, if a DHCP or Bootp server is not available or accessible to the switch when DHCP/Bootp is first configured, the switch may not immediately receive the desired configuration. After verifying that the server has become accessible to the switch, reboot the switch to re-start the process immediately.

DHCP Operation. A significant difference between a DHCP configuration and a Bootp configuration is that an IP address assignment from a DHCP server is automatic. Depending on how the DHCP server is configured, the switch may receive an IP address that is temporarily leased. Periodically the switch may be required to renew its lease of the IP configuration. Thus, the IP addressing provided by the server may be different each time the switch reboots or renews its configuration from the server. However, you can fix the address assignment for the switch by doing either of the following:

- Configure the server to issue an "infinite" lease.
- Using the switch's MAC address as an identifier, configure the server with a "Reservation" so that it will always assign the same IP address to the switch. (For MAC address information, refer to appendix D, "MAC Address Management".)

For more information on either of these procedures, refer to the documentation provided with the DHCP server.

Bootp Operation. When a Bootp server receives a request it searches its Bootp database for a record entry that matches the MAC address in the Bootp request from the switch. If a match is found, the configuration data in the associated database record is returned to the switch. For many Unix systems, the Bootp database is contained in the **/etc/bootptab** file. In contrast to DHCP operation, Bootp configurations are always the same for a specific receiving device. That is, the Bootp server replies to a request with a configuration previously stored in the server and designated for the requesting device.

Bootp Database Record Entries. A minimal entry in the Bootp table file **/etc/bootptab** to update an IP address and subnet mask to the switch or a VLAN configured in the switch would be similar to this entry:

```
5300switch:\
   ht=ether:\
   ha=0030c1123456:\
   ip=10.66.77.88:\
   sm=255.255.248.0:\
   gw=10.66.77.1:\
   hn:\
   vm=rfc1048
```

An entry in the Bootp table file `/etc/bootptab` to tell the switch or VLAN where to obtain a configuration file download would be similar to this entry:

```
5300switch:\
   ht=ether:\
   ha=0030c1123456:\
   ip=10.66.77.88:\
   sm=255.255.248.0:\
   gw=10.66.77.1:\
   lg=10.22.33.44:\
   T144="switch.cfg":\
   vm=rfc1048
```

where:

5300switch	is a user-defined symbolic name to help you find the correct section of the bootptab file. If you have multiple switches that will be using Bootp to get their IP configuration, you should use a unique symbolic name for each switch.
ht	is the "hardware type". For the switches covered in this guide, enter **ether** (for Ethernet). *This tag must precede the* ha *tag.*
ha	is the "hardware address". Use the switch's (or VLAN's) 12-digit MAC address.
ip	is the IP address to be assigned to the switch (or VLAN).
sm	is the subnet mask of the subnet in which the switch (or VLAN) is installed.
gw	is the IP address of the default gateway.
lg	TFTP server address (source of final configuration file)
T144	is the vendor-specific "tag" identifying the configuration file to download.
vm	is a required entry that specifies the Bootp report format. Use **rfc1048** for the switches covered in this guide.

Note

The above Bootp table entry is a sample that will work for the switch when the appropriate addresses and file names are used.

Network Preparations for Configuring DHCP/Bootp

In its default configuration, the switch is configured for DHCP/Bootp operation. However, the DHCP/Bootp feature will not acquire IP addressing for the switch unless the following tasks have already been completed:

- For Bootp operation:
  - A Bootp database record has already been entered into an appropriate Bootp server.
  - The necessary network connections are in place
  - The Bootp server is accessible from the switch

- For DHCP operation:
  - A DHCP scope has been configured on the appropriate DHCP server.
  - The necessary network connections are in place
  - A DHCP server is accessible from the switch

Note

Designating a primary VLAN other than the default VLAN affects the switch's use of information received via DHCP/Bootp. For more on this topic, refer to the chapter describing VLANs in the *Advanced Traffic Management Guide* for your switch.

After you reconfigure or reboot the switch with DHCP/Bootp enabled in a network providing DHCP/Bootp service, the switch does the following:

- Receives an IP address and subnet mask and, if configured in the server, a gateway IP address and the address of a Timep server.
- If the DHCP/Bootp reply provides information for downloading a configuration file, the switch uses TFTP to download the file from the designated source, then reboots itself. (This assumes that the switch or VLAN has connectivity to the TFTP file server specified in the reply, that the configuration file is correctly named, and that the configuration file exists in the TFTP directory.)

IP Preserve: Retaining VLAN-1 IP Addressing Across Configuration File Downloads

For the switches covered in this guide, IP Preserve enables you to copy a configuration file to multiple switches while retaining the individual IP address and subnet mask on VLAN 1 in each switch, and the Gateway IP address assigned to the switch. This enables you to distribute the same configuration file to multiple switches without overwriting their individual IP addresses.

Operating Rules for IP Preserve

When **ip preserve** is entered as the last line in a configuration file stored on a TFTP server:

- If the switch's current IP address for VLAN 1 was not configured by DHCP/Bootp, IP Preserve retains the switch's current IP address, subnet mask, and IP gateway address when the switch downloads the file and reboots. The switch adopts all other configuration parameters in the configuration file into the startup-config file.
- If the switch's current IP addressing for VLAN 1 is from a DHCP server, IP Preserve is suspended. In this case, whatever IP addressing the configuration file specifies is implemented when the switch downloads the file and reboots. If the file includes DHCP/Bootp as the IP addressing source for VLAN 1, the switch will configure itself accordingly and use DHCP/Bootp. If instead, the file includes a dedicated IP address and subnet mask for VLAN 1 and a specific gateway IP address, then the switch will implement these settings in the startup-config file.
- The **ip preserve** statement does not appear in **show config** listings. To verify IP Preserve in a configuration file, open the file in a text editor and view the last line. For an example of implementing IP Preserve in a configuration file, see figure 8-6, below.

Enabling IP Preserve

To set up IP Preserve, enter the **ip preserve** statement at the end of a configuration file. (Note that you do not execute IP Preserve by entering a command from the CLI).

```
; J4865A Configuration Editor; Created on release #G.04.05
hostname "HP4108"
time daylight-time-rule None
cdp run
  .
  .
  .
password manager
password operator
ip preserve
```

Entering "ip preserve" in the last line of a configuration file implements IP Preserve when the file is downloaded to the switch and the switch reboots.

Figure 8-6. Example of Implementing IP Preserve in a Configuration File

For example, consider Figure 8-7:

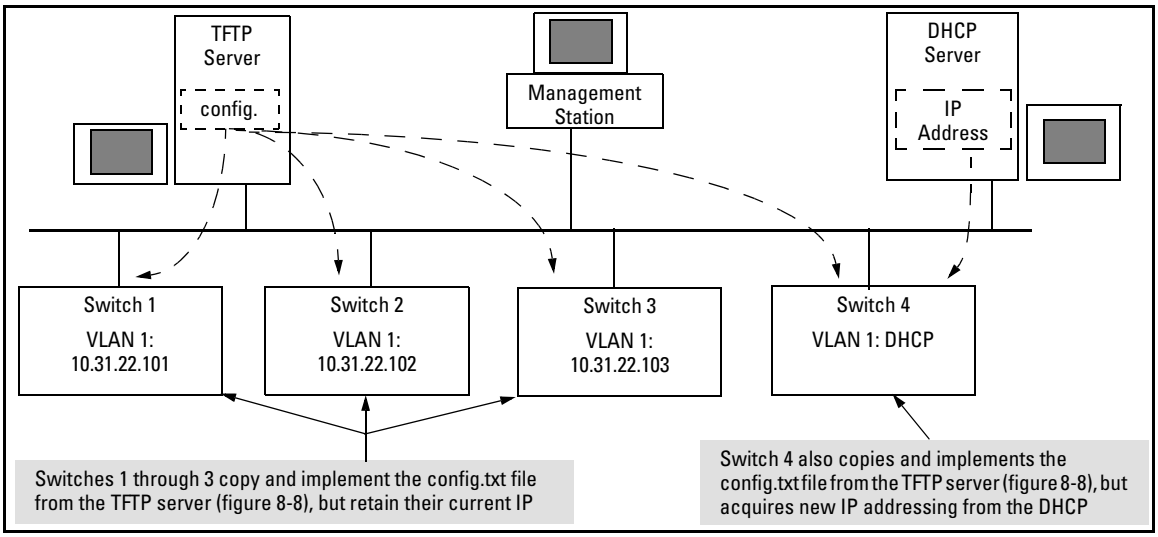

Figure 8-7. Example of IP Preserve Operation with Multiple Series Switches

If you apply the following configuration file to figure 8-7, switches 1 - 3 will retain their manually assigned IP addressing and switch 4 will be configured to acquire its IP addressing from a DHCP server.

```
; J4850A Configuration Editor; Created on release #E.08.22
hostname "HP4108"
time daylight-time-rule None
cdp run
interface A11
   no lacp
exit¶
interface A12
   no lacp
exit
trunk A11-A12 Trk1 Trunk
ip default-gateway 10.33.32.1
snmp-server community "public" Unrestricted
vlan 1
   name "DEFAULT_VLAN"
   ip address dhcp-bootp
   exit
password manager
password operator
ip preserve
```

IP Preserve Command

Using figure 8-7, above, switches 1 - 3 ignore these entries because the file implements IP Preserve and their current IP addressing was not acquired through DHCP/Bootp.

Switch 4 ignores IP Preserve and implements the DHCP/Bootp addressing and IP Gateway specified in this file (because its last IP addressing was acquired from a DHCP/Bootp server).

Figure 8-8. Configuration File in TFTP Server, with DHCP/Bootp Specified as the IP Addressing Source

If you apply this configuration file to figure 8-7, switches 1 - 3 will still retain their manually assigned IP addressing. However, switch 4 will be configured with the IP addressing included in the file.

```
; J4850A Configuration Editor; Created on release #E.08.22
hostname "HP4108"
time daylight-time-rule None
cdp run
interface A11
   no lacp
exit¶
interface A12
   no lacp
exit
trunk  A11-A12 Trk1 Trunk
ip default-gateway 10.33.32.1
snmp-server community "public" Unrestricted
vlan 1
   name "DEFAULT_VLAN"
   forbid A3
   untagged A1,A7-A10,A13-A14,Trk1
   tagged A4-A6
   no untagged A2-A3
   ip address 10.31.22.255 255.255.248.0
   exit
password manager
password operator
ip preserve
```

Because switch 4 (figure 8-7) received its most recent IP addressing from a DHCP/Bootp server, the switch ignores the **ip preserve** command and implements the IP addressing included in this file.

Figure 8-9. Configuration File in TFTP Server, with Dedicated IP Addressing Instead of DHCP/Bootp

To summarize the IP Preserve effect on IP addressing:

- If the switch received its most recent VLAN 1 IP addressing from a DHCP/Bootp server, it ignores the IP Preserve command when it downloads the configuration file, and implements whatever IP addressing instructions are in the configuration file.
- If the switch did not receive its most recent VLAN 1 IP addressing from a DHCP/Bootp server, it retains its current IP addressing when it downloads the configuration file.
- The content of the downloaded configuration file determines the IP addresses and subnet masks for other VLANs.

9

Time Protocols

Contents

Overview 9-2
TimeP Time Synchronization 9-2
SNTP Time Synchronization 9-3
Selecting a Time Synchronization Protocol or Turning Off Time Protocol Operation 9-3
General Steps for Running a Time Protocol on the Switch: 9-3
Disabling Time Synchronization 9-4
SNTP: Viewing, Selecting, and Configuring 9-5
Menu: Viewing and Configuring SNTP 9-6
CLI: Viewing and Configuring SNTP 9-8
Viewing the Current SNTP Configuration 9-9
Configuring (Enabling or Disabling) the SNTP Mode 9-10
TimeP: Viewing, Selecting, and Configuring 9-16
Menu: Viewing and Configuring TimeP 9-17
CLI: Viewing and Configuring TimeP 9-18
Viewing the Current TimeP Configuration 9-19
Configuring (Enabling or Disabling) the TimeP Mode 9-20
SNTP Unicast Time Polling with Multiple SNTP Servers 9-25
Address Prioritization 9-25
Displaying All SNTP Server Addresses Configured on the Switch . . 9-26
Adding and Deleting SNTP Server Addresses 9-26
Menu: Operation with Multiple SNTP Server Addresses Configured 9-28
SNTP Messages in the Event Log 9-28

Overview

This chapter describes:

- SNTP Time Protocol Operation
- Timep Time Protocol Operation

Using time synchronization ensures a uniform time among interoperating devices. This helps you to manage and troubleshoot switch operation by attaching meaningful time data to event and error messages.

The switch offers TimeP and SNTP (Simple Network Time Protocol) and a **timesync** command for changing the time protocol selection (or turning off time protocol operation).

Notes

- Although you can create and save configurations for both time protocols without conflicts, the switch allows only one active time protocol at any time.
- In the factory-default configuration, the time synchronization option is set to TimeP, with the TimeP mode itself set to **Disabled**.

TimeP Time Synchronization

You can either manually assign the switch to use a TimeP server or use DHCP to assign the TimeP server. In either case, the switch can get its time synchronization updates from only one, designated Timep server. This option enhances security by specifying which time server to use.

SNTP Time Synchronization

SNTP provides two operating modes:

- **Broadcast Mode:** The switch acquires time updates by accepting the time value from the first SNTP time broadcast detected. (In this case, the SNTP server must be configured to broadcast time updates to the network broadcast address. Refer to the documentation provided with your SNTP server application.) Once the switch detects a particular server, it ignores time broadcasts from other SNTP servers unless the configurable **Poll Interval** expires three consecutive times without an update received from the first-detected server.

Note

To use Broadcast mode, the switch and the SNTP server must be in the same subnet.

- **Unicast Mode:** The switch requests a time update from the configured SNTP server. (You can configure one server using the menu interface, or up to three servers using the CLI **sntp server** command.) This option provides increased security over the Broadcast mode by specifying which time server to use instead of using the first one detected through a broadcast.

Selecting a Time Synchronization Protocol or Turning Off Time Protocol Operation

General Steps for Running a Time Protocol on the Switch:

1. Select the time synchronization protocol: **SNTP** or **TimeP** (the default).
2. Enable the protocol. The choices are:
   - SNTP: **Broadcast** or **Unicast**
   - TimeP: **DHCP** or **Manual**

3. Configure the remaining parameters for the time protocol you selected.

   The switch retains the parameter settings for both time protocols even if you change from one protocol to the other. Thus, if you select a time protocol, the switch uses the parameters you last configured for the selected protocol.

Note that simply selecting a time synchronization protocol does not enable that protocol on the switch unless you also enable the protocol itself (step 2, above). For example, in the factory-default configuration, TimeP is the selected time synchronization method. However, because TimeP is disabled in the factory-default configuration, no time synchronization protocol is running.

Disabling Time Synchronization

You can use either of the following methods to disable time synchronization without changing the Timep or SNTP configuration:

- In the System Information screen of the Menu interface, set the **Time Synch Method** parameter to **None**, then press **[Enter]**, then **[S]** (for **Save**).
- In the Global config level of the CLI, execute **no timesync**.

SNTP: Viewing, Selecting, and Configuring

SNTP Feature	Default	Menu	CLI	Web
view the SNTP time synchronization configuration	n/a	page 9-6	page 9-9	—
select SNTP as the time synchronization method	timep	page 9-6	page 9-10 ff.	—
disable time synchronization	timep	page 9-6	page 9-14	—
enable the SNTP mode (Broadcast, Unicast, or Disabled)	disabled			—
broadcast	n/a	page 9-7	page 9-11	—
unicast	n/a	page 9-7	page 9-11	—
none/disabled	n/a	page 9-7	page 9-14	—
configure an SNTP server address (for Unicast mode only)	none	page 9-7	page 9-11 ff.	—
change the SNTP server version (for Unicast mode only)	3	page 9-7	page 9-13	—
change the SNTP poll interval	720 seconds	page 9-7	page 9-13	—

Table 9-1. SNTP Parameters

SNTP Parameter	Operation
Time Sync Method	Used to select either SNTP, TIMEP, or None as the time synchronization method.
SNTP Mode	
Disabled	The Default. SNTP does not operate, even if specified by the Menu interface **Time Sync Method** parameter or the CLI **timesync** command.
Unicast	Directs the switch to poll a specific server for SNTP time synchronization. Requires at least one server address.
Broadcast	Directs the switch to acquire its time synchronization from data broadcast by any SNTP server to the network broadcast address. The switch uses the first server detected and ignores any others. However, if the Poll Interval expires three times without the switch detecting a time update from the original server, it the switch accepts a broadcast time update from the next server it detects.
Poll Interval (seconds)	In Unicast Mode: Specifies how often the switch polls the designated SNTP server for a time update. In Broadcast Mode: Specifies how often the switch polls the network broadcast address for a time update.

SNTP Parameter	Operation
Server Address	Used only when the **SNTP Mode** is set to **Unicast**. Specifies the IP address of the SNTP server that the switch accesses for time synchronization updates. You can configure up to three servers; one using the menu or CLI, and two more using the CLI. See "SNTP Unicast Time Polling with Multiple SNTP Servers" on page 25.
Server Version	Default: 3; range: 1 - 7. Specifies the SNTP software version to use, and is assigned on a per-server basis. The version setting is backwards-compatible. For example, using version 3 means that the switch accepts versions 1 through 3.

Menu: Viewing and Configuring SNTP

To View, Enable, and Modify SNTP Time Protocol:

1. From the Main Menu, select:

   2. Switch Configuration...

   1. System Information

```
==========================- CONSOLE - MANAGER MODE -============================
                    Switch Configuration - System Information

  System Name : ProCurve
  System Contact :
  System Location :

  Inactivity Timeout (min) [0] : 0      MAC Age Time(sec) [300] : 300
  Inbound Telnet Enabled [Yes] : Yes    Web Agent Enabled [Yes] : Yes

  Time Sync Method [None]: TIMEP
  TimeP Mode [Disabled] : Disabled

  Time Zone [0] : 0
  Daylight Time Rule [None] : None

 Actions->   Cancel    Edit    Save    Help

Cancel changes and return to previous screen.
Use arrow keys to change action selection and <Enter> to execute action.
```

Time Protocol Selection Parameter
- TIMEP
- SNTP
- None

Figure 9-1. The System Information Screen (Default Values)

2. Press **[E]** (for **Edit**). The cursor moves to the **System Name** field.
3. Use [↓] to move the cursor to the **Time Sync Method** field.

4. Use the Space bar to select **SNTP**, then press [↓] once to display and move to the **SNTP Mode** field.

5. Do one of the following:

   - Use the Space bar to select the **Broadcast** mode, then press [↓] to move the cursor to the **Poll Interval** field, and go to step 6. (For Broadcast mode details, see "SNTP Operating Modes" on page 9-3.)

```
Time Sync Method [None] : SNTP
SNTP Mode [Disabled] : Broadcast
Poll Interval (sec) [720] : 720
Time Zone [0] : 0
Daylight Time Rule [None] : None
```

Figure 9-2. Time Configuration Fields for SNTP with Broadcast Mode

   - Use the Space bar to select the **Unicast** mode, then do the following:

     i. Press [→] to move the cursor to the **Server Address** field.

     ii. Enter the IP address of the SNTP server you want the switch to use for time synchronization.

     Note: This step replaces any previously configured server IP address. If you will be using backup SNTP servers (requires use of the CLI), then see "SNTP Unicast Time Polling with Multiple SNTP Servers" on page 9-25.

     iii. Press [↓] to move the cursor to the **Server Version** field. Enter the value that matches the SNTP server version running on the device you specified in the preceding step (step ii). If you are unsure which version to use, ProCurve recommends leaving this value at the default setting of **3** and testing SNTP operation to determine whether any change is necessary.

     Note: Using the menu to enter the IP address for an SNTP server when the switch already has one or more SNTP servers configured causes the switch to delete the primary SNTP server from the server list and to select a new primary SNTP server from the IP address(es) in the updated list. For more on this topic, see "SNTP Unicast Time Polling with Multiple SNTP Servers" on page 9-25.

     iv. Press [→] to move the cursor to the **Poll Interval** field, then go to step 6.

```
Time Sync Method [None] : SNTP
SNTP Mode [Disabled] : Unicast     Server Address : 10.28.227.15
Poll Interval (sec) [720] : 720    Server Version [3] : 3
Time Zone [0] : 0
Daylight Time Rule [None] : None
```

Note: The Menu interface lists only the highest priority SNTP server, even if others are configured. To view all SNTP servers configured on the switch, use the CLI **show management** command. Refer to "SNTP Unicast Time Polling with Multiple SNTP Servers" on page 9-25.

Figure 9-3. SNTP Configuration Fields for SNTP Configured with Unicast Mode

6. In the **Poll Interval** field, enter the time in seconds that you want for a Poll Interval. (For Poll Interval operation, see table 9-1, "SNTP Parameters", on page 9-5.)
7. Press **[Enter]** to return to the Actions line, then **[S]** (for **Save**) to enter the new time protocol configuration in both the startup-config and running-config files.

CLI: Viewing and Configuring SNTP

CLI Commands Described in this Section

SNTP Command	Page
show sntp	9-9
[no] timesync	9-10 and ff., 9-14
sntp broadcast	9-11
sntp unicast	9-11
sntp server	9-11 and ff.
Protocol Version	9-13
poll-interval	9-13
no sntp	9-14

This section describes how to use the CLI to view, enable, and configure SNTP parameters.

Viewing the Current SNTP Configuration

Syntax: show sntp

*This command lists both the time synchronization method (**TimeP**, **SNTP**, or **None**) and the SNTP configuration, even if SNTP is not the selected time protocol.*

For example, if you configured the switch with SNTP as the time synchronization method, then enabled SNTP in broadcast mode with the default poll interval, show sntp lists the following:

```
ProCurve(config)# show sntp

 SNTP Configuration

  Time Sync Mode: Sntp
  SNTP Mode : Unicast
  Poll Interval (sec) [720] : 720


  IP Address       Protocol Version
  --------------   ----------------
  10.10.28.101     3
  10.11.35.117     3
  10.12.115.86     3
```

Figure 9-4. Example of SNTP Configuration When SNTP Is the Selected Time Synchronization Method

In the factory-default configuration (where TimeP is the selected time synchronization method), **show sntp** still lists the SNTP configuration even though it is not currently in use. For example:

```
ProCurve(config)# show sntp

 SNTP Configuration

  Time Sync Mode: Timep
  SNTP Mode : Unicast
  Poll Interval (sec) [720] : 720


  IP Address       Protocol Version
  --------------   ----------------
  10.10.28.101     3
  10.11.35.117     3
  10.12.115.86     3
```

Even though, in this example, TimeP is the current time synchronous method, the switch maintains the SNTP configuration.

Figure 9-5. Example of SNTP Configuration When SNTP Is Not the Selected Time Synchronization Method

Syntax: show management

This command can help you to easily examine and compare the IP addressing on the switch. It lists the IP addresses for all time servers configured on the switch, plus the IP addresses and default gateway for all VLANs configured on the switch.

```
ProCurve(config)# show management

 Status and Counters - Management Address Information

  Time Server Address : 10.10.28.100

  SNTP Server Address Protocol Version
  ------------------- ----------------
  10.10.28.101        3
  10.11.35.117        3
  10.12.115.86        3


  Default Gateway     : 10.30.248.1

  VLAN Name    MAC Address         | IP Address
  ------------ ------------------- + -------------------
  DEFAULT_VLAN 0004ea-5e2000       | 10.30.248.184
  VLAN100      0004ea-5e2000       | 10.29.16.105
```

Figure 9-6. Example of Display Showing IP Addressing for All Configured Time Servers and VLANs

Configuring (Enabling or Disabling) the SNTP Mode

Enabling the SNTP mode means to configure it for either broadcast or unicast mode. Remember that to run SNTP as the switch's time synchronization protocol, you must also select SNTP as the time synchronization method by using the CLI **timesync** command (or the Menu interface **Time Sync Method** parameter).

Syntax: *timesync sntp*

Selects SNTP as the time protocol.

sntp < broadcast | unicast >

Enables the SNTP mode (below and page 9-11).

Syntax: sntp server < *ip-addr* >

Required only for unicast mode page 9-11).

Syntax: sntp poll-interval < 30 - 720 >

Enabling the SNTP mode also enables the SNTP poll interval (default: 720 seconds; page 9-13).

Enabling SNTP in Broadcast Mode. Because the switch provides an SNTP polling interval (default: 720 seconds), you need only these two commands for minimal SNTP broadcast configuration:

Syntax: timesync sntp

Selects SNTP as the time synchronization method.

Syntax: sntp broadcast

Configures **broadcast** *as the SNTP mode.*

For example, suppose:

- Time synchronization is in the factory-default configuration (TimeP is the currently selected time synchronization method).
- You want to:
  1. View the current time synchronization.
  2. Select SNTP as the time synchronization mode.
  3. Enable SNTP for Broadcast mode.
  4. View the SNTP configuration again to verify the configuration.

The commands and output would appear as follows:

```
ProCurve(config)# show sntp (1)
 SNTP Configuration
  Time Sync Mode: Timep
  SNTP Mode : disabled
  Poll Interval (sec) [720] : 720
ProCurve(config)# timesync sntp (2)
ProCurve(config)# sntp broadcast (3)
ProCurve(config)# show sntp (4)
 SNTP Configuration
  Time Sync Mode: Sntp
  SNTP Mode : Broadcast
  Poll Interval (sec) [720] : 720
```

(1) **show sntp** displays the SNTP configuration and also shows that TimeP is the currently active time synchronization mode.

(4) **show sntp** again displays the SNTP configuration and shows that SNTP is now the currently active time synchronization mode and is configured for broadcast operation.

Figure 9-7. Example of Enabling SNTP Operation in Broadcast Mode

Enabling SNTP in Unicast Mode. Like broadcast mode, configuring SNTP for unicast mode enables SNTP. However, for Unicast operation, you must also specify the IP address of at least one SNTP server. The switch allows up

to three unicast servers. You can use the Menu interface or the CLI to configure one server or to replace an existing Unicast server with another. To add a second or third server, you must use the CLI. For more on SNTP operation with multiple servers, see "SNTP Unicast Time Polling with Multiple SNTP Servers" on page 25.

Syntax: timesync sntp
Selects SNTP as the time synchronization method.

Syntax: sntp unicast
Configures the SNTP mode for Unicast operation.

Syntax: sntp server <*ip-addr*> [*version*]
Specifies the SNTP server. The default server version is **3**.

Syntax: no sntp server < *ip-addr* >
Deletes the specified SNTP server.

Note

Deleting an SNTP server when only one is configured disables SNTP unicast operation.

For example, to select SNTP and configure it with unicast mode and an SNTP server at 10.28.227.141 with the default server version (3) and default poll interval (720 seconds):

```
ProCurve(config)# timesync sntp
```

Selects SNTP.

```
ProCurve(config)# sntp unicast
```

Activates SNTP in Unicast mode.

```
ProCurve(config)# sntp server 10.28.227.141
```

Specifies the SNTP server and accepts the current SNTP server version (default: 3).

```
ProCurve(config)# show sntp
 SNTP Configuration
  Time Sync Mode: Sntp
  SNTP Mode : Unicast
  Poll Interval (sec) [720] : 720
  IP Address        Protocol Version
  --------------    ----------------
  10.28.227.141     3
```

In this example, the **Poll Interval** and the **Protocol Version** appear at their default settings.

Note: Protocol Version appears only when there is an IP address configured for an SNTP server.

Figure 9-8. Example of Configuring SNTP for Unicast Operation

If the SNTP server you specify uses SNTP version 4 or later, use the sntp server command to specify the correct version number. For example, suppose you learned that SNTP version 4 was in use on the server you specified above (IP address 10.28.227.141). You would use the following commands to delete the server IP address and then re-enter it with the correct version number for that server:

```
ProCurve(config)# no sntp server 10.28.227.141
ProCurve(config)# sntp server 10.28.227.141 4
ProCurve(config)# show sntp
 SNTP Configuration
  Time Sync Mode: Sntp
  SNTP Mode : Broadcast
  Poll Interval (sec) [720] : 600
  IP Address        Protocol Version
  --------------    ----------------
  10.28.227.141     4
```

Deletes unicast SNTP server entry.

Re-enters the unicast server with a non-default protocol version.

show sntp displays the result.

Figure 9-9. Example of Specifying the SNTP Protocol Version Number

Changing the SNTP Poll Interval.

Syntax: sntp poll-interval < 30..720 >

Specifies how long the switch waits between time polling intervals. The default is 720 seconds and the range is 30 to 720 seconds. (This parameter is separate from the poll interval parameter used for Timep operation.)

For example, to change the poll interval to 300 seconds:

```
ProCurve(config)# sntp poll-interval 300
```

Disabling Time Synchronization Without Changing the SNTP Configuration. The recommended method for disabling time synchronization is to use the **timesync** command.

Syntax: no timesync

Halts time synchronization without changing your SNTP configuration.

For example, suppose SNTP is running as the switch's time synchronization protocol, with **Broadcast** as the SNTP mode and the factory-default polling interval. You would halt time synchronization with this command:

```
ProCurve(config)# no timesync
```

If you then viewed the SNTP configuration, you would see the following:

```
ProCurve(config)# show sntp
 SNTP Configuration
  Time Sync Mode: Disabled
  SNTP Mode : Broadcast
  Poll Interval (sec) [720] : 720
```

Figure 9-10. Example of SNTP with Time Sychronization Disabled

Disabling the SNTP Mode. If you want to prevent SNTP from being used even if selected by **timesync** (or the Menu interface's **Time Sync Method** parameter), configure the SNTP mode as disabled.

Syntax: no sntp

Disables SNTP by changing the SNTP mode configuration to **Disabled**.

For example, if the switch is running SNTP in Unicast mode with an SNTP server at 10.28.227.141 and a server version of 3 (the default), **no sntp** changes the SNTP configuration as shown below, and disables time synchronization on the switch.

```
ProCurve(config)# no sntp

ProCurve(config)# show sntp
 SNTP Configuration
  Time Sync Mode: Sntp
  SNTP Mode : disabled
  Poll Interval (sec) [720] : 720
  IP Address        Protocol Version
  --------------    ----------------
  10.28.227.141     3
```

Even though the **Time Sync Mode** is set to **Sntp**, time synchronization is disabled because **no sntp** has disabled the **SNTP Mode** parameter.

Figure 9-11. Example of Disabling Time Synchronization by Disabling the SNTP Mode

TimeP: Viewing, Selecting, and Configuring

TimeP Feature	Default	Menu	CLI	Web
view the Timep time synchronization configuration	n/a	page 9-17	page 9-19	—
select Timep as the time synchronization method	TIMEP	page 9-15	pages 9-21 ff.	—
disable time synchronization	timep	page 9-17	page 9-23	—
enable the Timep mode	Disabled			—
DHCP	—	page 9-17	page 9-21	—
manual	—	page 9-18	page 9-22	—
none/disabled	—	page 9-17	page 9-23	—
change the SNTP poll interval	720 minutes	page 9-18	page 9-23	—

Table 9-2. Timep Parameters

SNTP Parameter	Operation
Time Sync Method	Used to select either TIMEP (the default), SNTP, or None as the time synchronization method.
Timep Mode	
Disabled	The Default. Timep does not operate, even if specified by the Menu interface **Time Sync Method** parameter or the CLI **timesync** command.
DHCP	When Timep is selected as the time synchronization method, the switch attempts to acquire a Timep server IP address via DHCP. If the switch receives a server address, it polls the server for updates according to the Timep poll interval. If the switch does not receive a Timep server IP address, it cannot perform time synchronization updates.
Manual	When Timep is selected as the time synchronization method, the switch attempts to poll the specified server for updates according to the Timep poll interval. If the switch fails to receive updates from the server, time synchronization updates do not occur.
Server Address	Used only when the **TimeP Mode** is set to **Manual**. Specifies the IP address of the TimeP server that the switch accesses for time synchronization updates. You can configure one server.
Poll Interval (minutes)	Default: 720 minutes. Specifies the interval the switch waits between attempts to poll the TimeP server for updates.

Menu: Viewing and Configuring TimeP

To View, Enable, and Modify the TimeP Protocol:

1. From the Main Menu, select:

   2. Switch Configuration...

   1. System Information

```
==========================- CONSOLE - MANAGER MODE -============================
                    Switch Configuration - System Information

  System Name : ProCurve
  System Contact :
  System Location :

  Inactivity Timeout (min) [0] : 0      MAC Age Time(sec) [300] : 300
  Inbound Telnet Enabled [Yes] : Yes    Web Agent Enabled [Yes] : Yes

  Time Sync Method [None]: TIMEP
  TimeP Mode [Disabled] : Disabled

  Time Zone [0] : 0
  Daylight Time Rule [None] : None

 Actions->   Cancel    Edit    Save    Help

Cancel changes and return to previous screen.
Use arrow keys to change action selection and <Enter> to execute action.
```

Time Protocol Selection Parameter
- TIMEP (the default)
- SNTP
- None

Figure 9-12. The System Information Screen (Default Values)

Press **[E]** (for **Edit**). The cursor moves to the **System Name** field.

2. Use [↓] to move the cursor to the **Time Sync Method** field.
3. If **TIMEP** is not already selected, use the Space bar to select **TIMEP**, then press [↓] once to display and move to the **TimeP Mode** field.
4. Do one of the following:
   - Use the Space bar to select the **DHCP** mode, then press [↓] to move the cursor to the **Poll Interval** field, and go to step 6.

```
Time Sync Method [None] : TIMEP
TimeP Mode [Disabled] : DHCP
Poll Interval (min) [720] : 720
Time Zone [0] : 0
Daylight Time Rule [None] : None
```

- Use the Space bar to select the **Manual** mode.
  i. Press → to move the cursor to the **Server Address** field.
  ii. Enter the IP address of the TimeP server you want the switch to use for time synchronization.

  Note: This step replaces any previously configured TimeP server IP address.

  iii. Press → to move the cursor to the **Poll Interval** field, then go to step 6.

5. In the **Poll Interval** field, enter the time in minutes that you want for a TimeP Poll Interval.

Press **[Enter]** to return to the Actions line, then **[S]** (for **Save**) to enter the new time protocol configuration in both the startup-config and running-config files.

CLI: Viewing and Configuring TimeP

CLI Commands Described in this Section

Command	Page
show timep	9-19
[no] timesync	9-20 ff., 9-23
ip timep	
dhcp	9-21
manual	9-22
server <*ip-addr*>	9-22
interval	9-23
no ip timep	9-23

This section describes how to use the CLI to view, enable, and configure TimeP parameters.

Viewing the Current TimeP Configuration

Using different **show** commands, you can display either the full TimeP configuration or a combined listing of all TimeP, SNTP, and VLAN IP addresses configured on the switch.

Syntax: show timep

This command lists both the time synchronization method (TimeP, SNTP, or None) and the TimeP configuration, even if SNTP is not the selected time protocol. (If the TimeP Mode is set to **Disabled** *or* **DHCP**, *then the* **Server** *field does not appear.)*

For example, if you configure the switch with TimeP as the time synchronization method, then enable TimeP in DHCP mode with the default poll interval, **show timep** lists the following:

```
ProCurve(config)# show timep
 Timep Configuration
  Time Sync Mode: Timep
  TimeP Mode [Disabled] : DHCP       Server Address : 10.10.28.100
  Poll Interval (min) [720] : 720
```

Figure 9-13. Example of TimeP Configuration When TimeP Is the Selected Time Synchronization Method

If SNTP is the selected time synchronization method, **show timep** still lists the TimeP configuration even though it is not currently in use:

```
ProCurve(config)# show timep

 Timep Configuration

  Time Sync Mode: Sntp
  TimeP Mode [Disabled] : Manual        Server Address : 10.10.28.100
  Poll Interval (min) [720] : 720
```

Even though, in this example, SNTP is the current time synchronization method, the switch maintains the TimeP configuration.

Figure 9-14. Example of TimeP Configuration When TimeP Is Not the Selected Time Synchronization Method

Syntax: show management

This command can help you to easily examine and compare the IP addressing on the switch. It lists the IP addresses for all time servers configured on the switch, plus the IP addresses and default gateway for all VLANs configured on the switch.

```
ProCurve(config)# show management

 Status and Counters - Management Address Information

  Time Server Address : 10.10.28.100

  SNTP Server Address Protocol Version
  ------------------- ----------------
  10.10.28.101        3
  10.11.35.117        3
  10.12.115.86        3


  Default Gateway     : 10.30.248.1

  VLAN Name    MAC Address         | IP Address
  ------------ ------------------- + -------------------
  DEFAULT_VLAN 0004ea-5e2000       | 10.30.248.184
  VLAN100      0004ea-5e2000       | 10.29.16.105
```

Figure 9-15. Example of Display Showing IP Addressing for All Configured Time Servers and VLANs

Configuring (Enabling or Disabling) the TimeP Mode

Enabling the TimeP mode means to configure it for either broadcast or unicast mode. Remember that to run TimeP as the switch's time synchronization protocol, you must also select TimeP as the time synchronization method by using the CLI timesync command (or the Menu interface **Time Sync Method** parameter).

Syntax: timesync timep
Selects TimeP as the time protocol.

Syntax: ip timep < dhcp | manual >
Enables the selected TimeP mode.

Syntax: no ip timep
Disables the TimeP mode.

Syntax: no timesync
Disables the time protocol.

Enabling TimeP in DHCP Mode. Because the switch provides a TimeP polling interval (default: 720 minutes), you need only these two commands for a minimal TimeP DHCP configuration:

Syntax: timesync timep

Selects TimeP as the time synchronization method.

Syntax: ip timep dhcp

Configures DHCP as the TimeP mode.

For example, suppose:

- Time synchronization is configured for SNTP.
- You want to:
  1. View the current time synchronization.
  2. Select TimeP as the time synchronization mode.
  3. Enable TimeP for DHCP mode.
  4. View the TimeP configuration.

The commands and output would appear as follows:

```
ProCurve(config)# show timep  (1)
 Timep Configuration
  Time Sync Mode: Sntp
  TimeP Mode : Disabled

ProCurve(config)# timesync timep  (2)

ProCurve(config)# ip timep dhcp  (3)

ProCurve(config)# show timep  (4)
 Timep Configuration
  Time Sync Mode: Timep
  TimeP Mode : DHCP    Poll Interval (min) : 720
```

(1) **show timep** displays the TimeP configuration and also shows that SNTP is the currently active time synchronization mode.

(4) **show timep** again displays the TimeP configuration and shows that TimeP is now the currently active time synchronization mode.

Figure 9-16. Example of Enabling TimeP Operation in DHCP Mode

Enabling Timep in Manual Mode. Like DHCP mode, configuring TimeP for **Manual** mode enables TimeP. However, for manual operation, you must also specify the IP address of the TimeP server. (The switch allows only one TimeP server.) To enable the TimeP protocol:

Syntax: timesync timep

Selects Timep.

Syntax: ip timep manual < *ip-addr* >

Activates TimeP in Manual mode with a specified TimeP server.

Syntax: no ip timep

Disables TimeP.

Note

To change from one TimeP server to another, you must (1) use the **no ip timep** command to disable TimeP mode, and then reconfigure TimeP in Manual mode with the new server IP address.

For example, to select TimeP and configure it for manual operation using a TimeP server address of 10.28.227.141 and the default poll interval (720 minutes, assuming the TimeP poll interval is already set to the default):

`ProCurve(config)# timesync timep`

Selects TimeP.

`ProCurve(config)# ip timep manual 10.28.227.141`

Activates TimeP in Manual mode.

```
ProCurve(config)# timesync timep
ProCurve(config)# ip timep manual 10.28.227.141

ProCurve(config)# Show timep
 Timep Configuration
  Time Sync Mode: Timep
  TimeP Mode : Manual          Server Address : 10.28.227.141
  Poll Interval (min) : 720
```

Figure 9-17. Example of Configuring Timep for Manual Operation

Changing the TimeP Poll Interval. This command lets you specify how long the switch waits between time polling intervals. The default is 720 minutes and the range is 1 to 9999 minutes. (This parameter is separate from the poll interval parameter used for SNTP operation.)

Syntax: ip timep < dhcp | manual > interval < 1 - 9999 >

For example, to change the poll interval to 60 minutes:

```
ProCurve(config)# ip timep interval 60
```

Disabling Time Synchronization Without Changing the TimeP Configuration. The recommended method for disabling time synchronization is to use the **timesync** command. This halts time synchronization without changing your TimeP configuration.

Syntax: no timesync

Disables time synchronization by changing the **Time Synch Mode** *configuration to* **Disabled**.

For example, suppose TimeP is running as the switch's time synchronization protocol, with **DHCP** as the TimeP mode, and the factory-default polling interval. You would halt time synchronization with this command:

```
HPswitch(config)# no timesync
```

If you then viewed the TimeP configuration, you would see the following:

```
ProCurve(config)# show timep
 Timep Configuration
  Time Sync Mode: Disabled
  TimeP Mode : DHCP    Poll Interval (min) : 720
```

Figure 9-18. Example of TimeP with Time Sychronization Disabled

Disabling the TimeP Mode. Disabling the TimeP mode means to configure it as disabled. (Disabling TimeP prevents the switch from using it as the time synchronization protocol, even if it is the selected **Time Sync Method** option.)

Syntax: no ip timep

Disables TimeP by changing the TimeP mode configuration to **Disabled**.

For example, if the switch is running TimeP in DHCP mode, **no ip timep** changes the TimeP configuration as shown below, and disables time synchronization.

```
ProCurve(config)# no ip timep

ProCurve(config)# show timep
 Timep Configuration
  Time Sync Mode: Timep
  TimeP Mode : Disabled
```

Even though the Time Sync Mode is set to Timep, time synchronization is disabled because no ip timep has disabled the TimeP Mode parameter.

Figure 9-19. Example of Disabling Time Synchronization by Disabling the TimeP Mode Parameter

SNTP Unicast Time Polling with Multiple SNTP Servers

When running SNTP unicast time polling as the time synchronization method, the switch requests a time update from the server you configured with either the Server Address parameter in the menu interface, or the primary server in a list of up to three SNTP servers configured using the CLI. If the switch does not receive a response from the primary server after three consecutive polling intervals, the switch tries the next server (if any) in the list. If the switch tries all servers in the list without success, it sends an error message to the Event Log and reschedules to try the address list again after the configured **Poll Interval** time has expired.

Address Prioritization

If you use the CLI to configure multiple SNTP servers, the switch prioritizes them according to the decimal values of their IP addresses. That is, the switch compares the decimal value of the octets in the addresses and orders them accordingly, with the lowest decimal value assigned as the primary address, the second-lowest decimal value assigned as the next address, and the third-lowest decimal value as the last address. If the first octet is the same between two of the addresses, the second octet is compared, and so on. For example:

SNTP Server IP Address	Server Ranking According to Decimal Value of IP Address
10.28.227.141	Primary
10.28.227.153	Secondary
10.29.227.100	Tertiary

Displaying All SNTP Server Addresses Configured on the Switch

The System Information screen in the menu interface displays only one SNTP server address, even if the switch is configured for two or three servers. The CLI **show management** command displays all configured SNTP servers on the switch.

```
ProCurve(config)# show management

 Status and Counters - Management Address Information

  Time Server Address : Disabled

  SNTP Server Address Protocol Version
  ------------------- ----------------
  10.28.227.141       3
  10.28.227.153       3
  10.29.227.100       3

  Default Gateway     : 15.30.248.1

  VLAN Name    MAC Address          | IP Address
  ------------ -------------------- + -------------------
  DEFAULT_VLAN 0004ea-5e2000        | 15.30.248.184
  VLAN28       0004ea-5e2000        | 10.28.227.100
  VLAN29       0004ea-5e2000        | 10.29.227.53
```

Figure 9-20. Example of How To List All SNTP Servers Configured on the Switch

Adding and Deleting SNTP Server Addresses

Adding Addresses. As mentioned earlier, you can configure one SNTP server address using either the Menu interface or the CLI. To configure a second and third address, you must use the CLI. For example, suppose you have already configured the primary address in the above table (10.28.227.141). To configure the remaining two addresses, you would do the following:

```
ProCurve(config)# sntp server 10.29.227.100
ProCurve(config)# sntp server 10.28.227.153
ProCurve(config)# show sntp
 SNTP Configuration
  Time Sync Mode: Sntp
  SNTP Mode : disabled
  Poll Interval (sec) [720] : 720
  IP Address       Protocol Version
  --------------   ----------------
  10.28.227.141    3
  10.28.227.153    3
  10.29.227.100    3
```

Prioritized list of SNTP Server IP Addresses

Figure 9-21. Example of SNTP Server Address Prioritization

Note

If there are already three SNTP server addresses configured on the switch, and you want to use the CLI to replace one of the existing addresses with a new one, you must delete the unwanted address before you configure the new one.

Deleting Addresses. To delete an address, you must use the CLI. If there are multiple addresses and you delete one of them, the switch re-orders the address priority. (See "Address Prioritization" on page 25.)

Syntax: no sntp server < *ip-addr* >

For example, to delete the primary address in the above example (and automatically convert the secondary address to primary):

```
ProCurve(config)# no sntp server 10.28.227.141
```

Menu: Operation with Multiple SNTP Server Addresses Configured

When you use the Menu interface to configure an SNTP server IP address, the new address writes over the current primary address, if one is configured. If there are multiple addresses configured, the switch re-orders the addresses according to the criteria described under "Address Prioritization" on page 25. For example, suppose the switch already has the following three SNTP server IP addresses configured.

- 10.28.227.141 (primary)
- 10.28.227.153 (secondary)
- 10.29.227.100 (tertiary)

If you use the Menu interface to add 10.28.227.160, the new prioritized list will be:

New Address List	Address Status
10.28.227.153	New Primary (The former primary, 10.28.227.141 was deleted when you used the menu to add 10.28.227.160.)
10.28.227.160	New Secondary
10.29.227.100	Same Tertiary (This address still has the highest decimal value.)

SNTP Messages in the Event Log

If an SNTP time change of more than three seconds occurs, the switch's event log records the change. SNTP time changes of less than three seconds do not appear in the Event Log.

10

Port Status and Basic Configuration

Contents

Overview 10-2

Viewing Port Status and Configuring Port Parameters 10-2

Menu: Port Configuration 10-6

CLI: Viewing Port Status and Configuring Port Parameters 10-8

Using the CLI To Enable or Disable Ports and Configure Port Mode 10-9

Enabling or Disabling Flow Control 10-11

Configuring a Broadcast Limit on the Switch 10-14

Configuring Auto-MDIX 10-15

Web: Viewing Port Status and Configuring Port Parameters 10-18

Using Friendly (Optional) Port Names 10-18

Configuring and Operating Rules for Friendly Port Names 10-19

Configuring Friendly Port Names 10-19

Displaying Friendly Port Names with Other Port Data 10-21

Overview

This chapter describes how to view the current port configuration and how to configure ports to non-default settings, including

- Enable/Disable
- Mode (speed and duplex)
- Flow Control
- Broadcast Limit

Viewing Port Status and Configuring Port Parameters

Port Status and Configuration Features

Feature	Default	Menu	CLI	Web
viewing port status	n/a	page 10-6	page 10-8	page 10-18
configuring ports	Refer to Table 10-1 on pages 10-3 thru 10-5	page 10-7	page 10-9	page 10-18
configuring auto-mdix			page 9-11	

Note On Connecting Transceivers to Fixed-Configuration Devices

If the switch either fails to show a link between an installed transceiver and another device, or demonstrates errors or other unexpected behavior on the link, check the port configuration on both devices for a speed and/or duplex (mode) mismatch. To check the mode setting for a port on the switch, use either the Port Status screen in the menu interface (page 10-6) or **show interfaces brief** in the CLI (page 10-8).

Table 10-1. Status and Parameters for Each Port Type

Status or Parameter	Description
Enabled	**Yes** (default): The port is ready for a network connection. **No:** The port will not operate, even if properly connected in a network. Use this setting, for example, if the port needs to be shut down for diagnostic purposes or while you are making topology changes.
Status (read-only)	**Up**: The port senses a link beat. **Down**: The port is not enabled, has no cables connected, or is experiencing a network error. For troubleshooting information, refer to the installation manual you received with the switch. Refer also to appendix C, "Troubleshooting" (in this manual).
Mode	The port's speed and duplex (data transfer operation) setting. **10/100Base-T Ports:** • **auto-mdix** (default): Senses speed and negotiates with the port at the other end of the link for data transfer operation (half-duplex or full-duplex). **Note:** Ensure that the device attached to the port is configured for the same setting that you select here. Also, if "Auto" is used, the device to which the port is connected must operate in compliance with the IEEE 802.3u "Auto Negotiation" standard for 100Base-T networks. If the other device does not comply with the 802.3u standard, or is not set to Auto, then the port configuration on the switch must be manually set to match the port configuration on the other device. To see what the switch negotiates for the Auto setting, use the CLI **show interfaces brief** command or the "**3. Port Status"** option under "**1. Status and Counters"** in the menu interface. • **mdi:** Sets the port to connect with a PC using a crossover cable (Manual mode—applies only to copper port switches using twisted-pair copper Ethernet cables) • **mdix:** Sets the port to connect with a PC using a straight-through cable (Manual mode—applies only to copper port switches using twisted-pair copper Ethernet cables) • **Auto-10:** Allows the port to negotiate between half-duplex (HDx) and full-duplex (FDx) while keeping speed at 10 Mbps. Also negotiates flow control (enabled or disabled). ProCurve recommends Auto-10 for links between 10/100 auto-sensing ports connected with Cat 3 cabling. (Cat 5 cabling is required for 100 Mbps links.). • **10HDx:**10 Mbps, Half-Duplex • **10FDx:** 10 Mbps, Full-Duplex • **100HDx:** 100 Mbps, Half-Duplex • **100FDx:** 100 Mbps, Full-Duplex **100FX Ports**: • **100HDx:** 100 Mbps, Half-Duplex • **100FDx** (default): 100 Mbps, Full-Duplex

— Continued —

Status or Parameter	Description
	— Continued From Previous Page — **100/1000Base-T Ports:** • **auto-mdix** (default): Senses speed and negotiates with the port at the other end of the link for port operation (MDI-X or MDI). To see what the switch negotiates for the Auto setting, use the CLI **show interfaces brief** command or the "**3. Port Status"** option under "**1. Status and Counters"** in the menu interface. • **mdi:** Sets the port to connect with a PC using a crossover cable (Manual mode—applies only to copper port switches using twisted-pair copper Ethernet cables) • **mdix:** Sets the port to connect with a PC using a straight-through cable (Manual mode—applies only to copper port switches using twisted-pair copper Ethernet cables) • **Auto-100:** Uses 100 Mbps and negotiates with the port at the other end of the link for other port operation features. • **Auto-1000:** Uses 1000 Mbps and negotiates with the port at the other end of the link for other port operation features. • **100Hdx:** Uses 100 Mbps, half-duplex. • **100Fdx:** Uses 100 Mbps, Full-Duplex **Notes:** • Changing the port speed on a transceiver port requires a reboot of the switch. • Ensure that the device attached to the port is configured for the same setting that you select here. Also, if "Auto" is used, the device to which the port connects must also be configured to "Auto" and operate in compliance with the IEEE 802.3ab "Auto Negotiation" standard for 1000Base-T networks.
	10/100/1000Base-T Ports: • **auto-mdix** (default): Senses speed and negotiates with the port at the other end of the link for port operation (MDI-X or MDI). To see what the switch negotiates for the Auto setting, use the CLI **show interfaces brief** command or the "**3. Port Status"** option under "**1. Status and Counters"** in the menu interface. • **mdi:** Sets the port to connect with a PC using a crossover cable (Manual mode—applies only to copper port switches using twisted-pair copper Ethernet cables) • **mdix:** Sets the port to connect with a PC using a straight-through cable (Manual mode—applies only to copper port switches using twisted-pair copper Ethernet cables) • **Auto-10:** Allows the port to negotiate between half-duplex (HDx) and full-duplex (FDx) while keeping speed at 10 Mbps. Also negotiates flow control (enabled or disabled). ProCurve recommends Auto-10 for links between 10/100 auto-sensing ports connected with Cat 3 cabling. (Cat 5 cabling is required for 100 Mbps links.). • **10HDx:**10 Mbps, Half-Duplex • **10FDx:** 10 Mbps, Full-Duplex • **Auto-100:** Uses 100 Mbps and negotiates with the port at the other end of the link for other port operation features. • **Auto-1000:** Uses 1000 Mbps and negotiates with the port at the other end of the link for other port operation features. • **100Hdx:** Uses 100 Mbps, half-duplex. • **100Fdx:** Uses 100 Mbps, Full-Duplex *— Continued on Next Page —*

Status or Parameter	Description
	— Continued From Previous Page —
	Gigabit Fiber-Optic Ports (Gigabit-SX, Gigabit-LX, and Gigabit-LH): • **1000FDx:** 1000 Mbps (1 Gbps), Full Duplex only • **Auto** (default): The port operates at 1000FDx and auto-negotiates flow control with the device connected to the port.
	10-Gigabit CX4 Copper Ports: • **Auto**: The port operates at 10 gigabits FDx and negotiates flow control. Lower speed settings or half-duplex are not allowed.
	10-Gigabit SC Fiber-Optic Ports: • **Auto**: The port operates at 10 gigabits FDx and negotiates flow control. Lower speed settings or half-duplex are not allowed.
Auto-MDIX	The switch supports Auto-MDIX on 10Mb, 100Mb, and 1 Gb T/TX (copper) ports. (Fiber ports and 10-gigabit ports do not use this feature.) • **Automdix:** Configures the port for automatic detection of the cable type (straight-through or crossover). • **MDI:** Configures the port to connect to a switch, hub, or other MDI-X device with a straight-through cable. • **MDIX:** Configures the port to connect to a PC or other MDI device with a straight-through cable.
Flow Control	• **Disabled** (default): The port does not generate flow control packets, and drops any flow control packets it receives. • **Enabled:** The port uses 802.3x Link Layer Flow Control, generates flow control packets, and processes received flow control packets. With the port mode set to **Auto** (the default) and Flow Control enabled, the switch negotiates Flow Control on the indicated port. If the port mode is not set to Auto, or if Flow Control is disabled on the port, then Flow Control is not used. You must enable flow control globally on the switch before enabling it on individual ports. Also, you must disable flow control on the individual ports before disabling it globally on the switch. Note that flow control must be enabled on both ends of a link.
Broadcast Limit	Specifies the percentage of the theoretical maximum network bandwidth that can be used for broadcast and multicast traffic. Any broadcast or multicast traffic exceeding that limit will be dropped. Zero (0) means the feature is disabled. **Series 5300xl and Series 4200vl Switches:** The broadcast-limit command operates at the global configuration context level to set the broadcast limit for all ports on the switch. **Series 3400cl and Series 6400cl Switches:** The broadcast-limit command operates at the port context level to set the broadcast limit on a per-port basis. **Note:** This feature is not appropriate for networks that require high levels of IPX or RIP broadcast traffic.

Menu: Port Configuration

From the menu interface, you can view and change the port configuration.

Using the Menu To View Port Configuration. The menu interface displays the configuration for ports and (if configured) any trunk groups.

From the Main Menu, select:

1. **Status and Counters …**
   3. **Port Status** *(3400cl and 6400cl switches)*
      — or —
   4. **Port Status** *(5300cl and 4200vl switches)*

```
==========================- CONSOLE - MANAGER MODE -=========================
                          Status and Counters - Port Status

                          Intrusion                                  MDI   Flow
  Port      Type            Alert     Enabled  Status     Mode      Mode  Ctrl
  -------  ---------      ---------  -------  ------  ----------  -----  -----
  B1       10/100TX       No         Yes      Down    10FDx       Auto   off
  B2       10/100TX       No         Yes      Down    10FDx       Auto   off
  B3       10/100TX       No         Yes      Down    10FDx       Auto   off
  B4       10/100TX       No         Yes      Down    10FDx       Auto   off
  B5       10/100TX       No         Yes      Down    10FDx       Auto   off
  B6       10/100TX       No         Yes      Down    10FDx       Auto   off
  B7-Trk2  10/100TX       No         Yes      Down    10FDx       Auto   off
  B8-Trk2  10/100TX       No         Yes      Down    10FDx       Auto   off
  B9       10/100TX       No         Yes      Down    10FDx       Auto   off
  B10      10/100TX       No         Yes      Down    10FDx       Auto   off
  B11      10/100TX       No         Yes      Down    10FDx       Auto   off

 Actions->   Back     Intrusion log     Help

Return to previous screen.
Use up/down arrow keys to scroll to other entries, left/right arrow keys to
change action selection, and <Enter> to execute action.
```

In this example, ports A7 and A8 have previously been configured as a trunk group.

Figure 10-1. Example of a 5300xl Port Status Screen

```
==========================- CONSOLE - MANAGER MODE -============================
                          Status and Counters - Port Status

                          Intrusion                                  MDI   Flow   Bcast
  Port      Type            Alert     Enabled  Status     Mode      Mode  Ctrl   Limit
  -----    ---------      ---------  -------  ------  ----------  -----  -----  ------
  1        100/1000T      No         Yes      Down    1000FDx     Auto   off    0
  2        100/1000T      No         Yes      Down    1000FDx     Auto   off    0
  3        100/1000T      No         Yes      Down    1000FDx     Auto   off    0
  4        100/1000T      No         Yes      Down    1000FDx     Auto   off    0
  5        100/1000T      No         Yes      Down    1000FDx     Auto   off    0
  6        100/1000T      No         Yes      Down    1000FDx     Auto   off    0
  7        100/1000T      No         Yes      Down    1000FDx     Auto   off    0
  8        100/1000T      No         Yes      Down    1000FDx     Auto   off    0
  9        100/1000T      No         Yes      Down    1000FDx     Auto   off    0
  10       100/1000T      No         Yes      Down    1000FDx     Auto   off    0
  11       100/1000T      No         Yes      Down    1000FDx     Auto   off    0

 Actions->   Back     Intrusion log     Help

Return to previous screen.
Use up/down arrow keys to scroll to other entries, left/right arrow keys to
change action selection, and <Enter> to execute action.
```

The 3400cl/6400cl switches support per-port Broadcast Limit configuration.

Figure 10-2. Example of a 3400cl Port Status Screen

Using the Menu To Configure Ports.

Note

The menu interface uses the same screen for configuring both individual ports and port trunk groups. For information on port trunk groups, refer to chapter 13, “Port Trunking” .

1. From the Main Menu, Select:

   2. Switch Configuration...

   2. Port/Trunk Settings

```
============================- CONSOLE - MANAGER MODE -============================
                    Switch Configuration - Port/Trunk Settings

  Port    Type       Enabled      Mode       Flow Ctrl  Group    Type
  ----  --------- + -------  ------------  ---------  -----  --------
  A1    10/100TX  | Yes      Auto          Disable
  A2    10/100TX  | Yes      Auto          Disable
  A3    10/100TX  | Yes      Auto          Disable
  A4    10/100TX  | Yes      Auto          Disable
  A5    10/100TX  | Yes      Auto          Disable
  A6    10/100TX  | Yes      Auto          Disable
  A7    10/100TX  | Yes      Auto          Disable    Trk2   Trunk
  A8    10/100TX  | Yes      Auto          Disable    Trk2   Trunk

 Actions->   Cancel     Edit     Save     Help

Cancel changes and return to previous screen.
Use arrow keys to change action selection and <Enter> to execute action.
```

Figure 10-3. Example of Port/Trunk Settings with a Trunk Group Configured

2. Press **[E]** (for Edit). The cursor moves to the **Enabled** field for the first port.
3. Refer to the online help provided with this screen for further information on configuration options for these features.
4. When you have finished making changes to the above parameters, press **[Enter]**, then press **[S]** (for **Save**).

CLI: Viewing Port Status and Configuring Port Parameters

Port Status and Configuration Commands

show interfaces brief	page 10-9
show interfaces config	page 10-9
interface	page 10-9
disable/enable	page 10-9
speed-duplex	page 10-9
flow-control	page 10-11
broadcast-limit	page 10-14
auto-mdix	page 10-15

From the CLI, you can configure and view all port parameter settings and view all port status indicators.

Using the CLI To View Port Status. Use the following commands to display port status and configuration.

Syntax: show interfaces [brief | config | < *port-list* >]

brief: *Lists the current operating status for all ports on the switch.*

config: *Lists a subset of configuration data for all ports on the switch; that is, for each port, the display shows whether the port is enabled, the operating mode, and whether it is configured for flow control.*

< *port-list* >: Shows a summary of network traffic handled by the specified ports.

Series 3400cl and Series 6400cl switches include per-port broadcast limit settings in the **show interfaces** *and* **show interfaces brief** *display outputs.*

The next two figures list examples of the output of the above two command options for the same port configuration.

```
ProCurve(config)# show interfaces brief

 Status and Counters - Port Status

                   | Intrusion                                MDI    Flow  Bcast
 Port  Type        | Alert     Enabled Status Mode          Mode   Ctrl  Limit
 ----- ---------- + --------- ------- ------ ---------- ----- ----- ------
 1     100/1000T   | No        Yes     Down   1000FDx     Auto   off   0
 2     100/1000T   | No        Yes     Down   1000FDx     Auto   off   0
 3     100/1000T   | No        Yes     Down   1000FDx     Auto   off   0
 4     100/1000T   | No        Yes     Down   1000FDx     Auto   off   0
 5     100/1000T   | No        Yes     Down   1000FDx     Auto   off   0
 6     100/1000T   | No        Yes     Down   1000FDx     Auto   off   0
 .        .         .          .       .       .          .      .     .
 .        .         .          .       .       .          .      .     .
 .        .         .          .       .       .          .      .     .
 24    100/1000T   | No        Yes     Down   1000FDx     Auto   off   0
 25    10GbE-CX4   | No        Yes     Down   10-Gig      n/a    off   0
 26    10GbE-LR    | No        Yes     Down   10-Gig      n/a    off   0
```

This screen shows current port operating status.
Note: The (per-port) **Bcast Limit** column appears only on the 3400cl and 6400cl switches. (The 5300xl switches apply a global broadcast limit.)

3400cl/ 6400cl Switches Only

Figure 10-4. Example of a Show Interfaces Brief Command Listing

```
ProCurve(config)# show interface config
 Port Settings
  Port  Type       | Enabled Mode          Flow Ctrl MDI
  ----- ---------- + ------- ------------ --------- ----
  1     100/1000T  | Yes     Auto         Disable   Auto
  2     100/1000T  | Yes     Auto         Disable   Auto
  3     100/1000T  | Yes     Auto         Disable   Auto
  4     100/1000T  | Yes     Auto         Disable   Auto
  5     100/1000T  | Yes     Auto         Disable   Auto
  6     100/1000T  | Yes     Auto         Disable   Auto
  .        .        .        .              .        .
  .        .        .        .              .        .
  .        .        .        .              .        .
  24    100/1000T  | Yes     Auto         Disable   Auto
  25    10GbE-CX4  | Yes     Auto         Disable
  26    10GbE-LR   | Yes     Auto         Disable
```

This screen shows current port configuration.

Figure 10-5. Example of a Show Interfaces Config Command Listing

Using the CLI To Enable or Disable Ports and Configure Port Mode

You can configure one or more of the following port parameters. For details, refer to table 10-1 on pages 10-3 thru 10-5.

Syntax: [no] interface *< port-list >*

[< disable | enable >]

Disables or enables the port for network traffic. Does not use the **no** *form of the command. (Default:* **enable***.)*

[speed-duplex < auto-10 | 10-full | 10-half | 100-full | 100-half | auto | auto-100 | 1000-full >]

Specifies the port's data transfer speed and mode. Does not use the **no** *form of the command. (Default:* **auto***.)*

Note that in the above syntax you can substitute an "**int**" for "**interface**"; that is: **int < *port-list* >**.

For example, to configure ports C1 through C3 and port C6 for 100Mbps full-duplex, you would enter these commands:

```
ProCurve(config)# int c1-c3,c6 speed-duplex 100-full
```

Similarly, to configure a single port with the above command settings, you could either enter the same command with only the one port identified, or go to the *context level* for that port and then enter the command. For example, to enter the context level for port C6 and then configure that port for 100FDx:

```
ProCurve(config)# int e c6
ProCurve(eth-C6)# speed-duplex 100-full
```

If port C8 was disabled, and you wanted to enable it and configure it for 100FDx with flow-control active, you could do so with either of the following command sets. (Note that to enable flow control on individual ports, you must first enable it globally, as shown in these examples.)

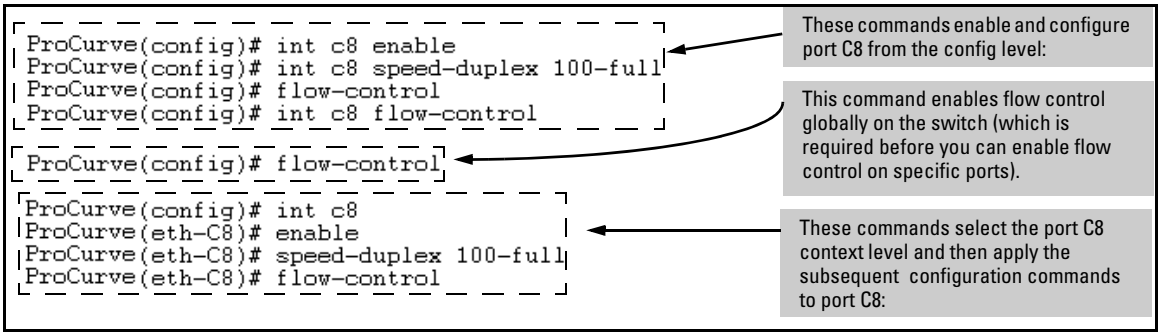

Figure 10-6. Examples of Two Methods for Changing a Port Configuration

Refer to "Enabling or Disabling Flow Control" on page 10-11 for more on flow control.

Enabling or Disabling Flow Control

- **3400cl/6400cl Switches:** Flow-Control on these switches is enabled and disabled on a per-port basis.
- **5300xl and 4200vl Switches:** You must first enable flow-control globally on the switch, and then enable it on the desired ports.

Note

You must enable flow control on both ports in a given link. Otherwise, flow control does not operate on the link, and appears as **Off** in the **show interfaces brief** port listing, even if flow control is configured as enabled on the port in the switch. (Refer to figure 10-4 on page 10-9.) Also, the port (speed-duplex) mode must be set to **Auto** (the default).

Flow Control on the 3400cl/6400cl Switches.

Syntax: [no] interface < *port-list* > flow-control

Enables or disables flow control packets on < *port-list* > *ports. The "***no***" form of the command disables flow control. (Default: Disabled.)*

Use the show interfaces brief command *(figure 10-4 on page 10-9) to view the current per-port flow-control configuration.*

Flow Control on the 5300xl and 4200vl Switches. As mentioned earlier, flow control operates on individual 5300xl and 4200vl switch ports after you first enable global flow control and then per-port flow control. The reverse is true for disabling flow control on all ports. (Disable per-port flow control, and then disable global flow control.) To disable flow control on some ports, while leaving it enabled on other ports, just disable it on the individual ports you want to exclude.

Syntax: [no] flow-control

Enables or disables flow-control globally on the switch, and is required before you can enable flow control on specific ports. To use the no form of the command to disable global flow-control, you must first disable flow-control on all ports on the switch. (Default: Disabled)

[no] interface < *port-list* > flow-control

*Enables or disables flow control packets on the port. The "***no***" form of the command disables flow control on the individual ports. (Default: Disabled.)*

For example, suppose that:

1. You want to enable flow control on ports A1-A6.
2. Later, you decide to disable flow control on ports A5 and A6.
3. As a final step, you want to disable flow control on all ports.

Assuming that flow control is currently disabled on the switch, you would use these commands:

```
ProCurve(config)# flow-control
ProCurve(config)# int a1-a6 flow-control
ProCurve(config)# show interfaces brief
Status and Counters - Port Status

                  | Intrusion                                Flow
 Port  Type       | Alert     Enabled Status Mode          Ctrl
 ----- --------- + --------- ------- ------ ---------- -----
 A1    10/100TX   | No        Yes     Up     10FDx        on
 A2    10/100TX   | No        Yes     Up     10FDx        on
 A3    10/100TX   | No        Yes     Up     10FDx        on
 A4    10/100TX   | No        Yes     Up     10FDx        on
 A5    10/100TX   | No        Yes     Up     10FDx        on
 A6    10/100TX   | No        Yes     Up     10FDx        on
 A7    10/100TX   | No        Yes     Down   10HDx        off
 A8    10/100TX   | No        Yes     Up     10FDx        off
  .
  .
  .
```

Enables global flow control.

Enables per-port flow control for ports A1 - A6.

Figure 10-7. Example of Configuring Flow Control for a Series of Ports

```
ProCurve(config)# no int a5-a6 flow-control
ProCurve(config)# show interfaces brief

Status and Counters - Port Status

                    ¦ Intrusion                                  Flow
 Port  Type         ¦ Alert     Enabled Status Mode        Ctrl
 ----- ---------- + --------- ------- ------ ---------- -----
 A1    10/100TX     ¦ No        Yes     Down   10FDx      on
 A2    10/100TX     ¦ No        Yes     Down   10FDx      on
 A3    10/100TX     ¦ No        Yes     Down   10FDx      on
 A4    10/100TX     ¦ No        Yes     Down   10FDx      on
 A5    10/100TX     ¦ No        Yes     Down   10FDx      off
 A6    10/100TX     ¦ No        Yes     Down   10FDx      off
 A7    10/100TX     ¦ No        Yes     Up     10HDx      off
 A8    10/100TX     ¦ No        Yes     Down   10FDx      off
 .
 .
 .
```

Disables per-port flow control on ports A5 and A6.

Figure 10-8. Example Continued from Figure 10-7

```
ProCurve(config)# no int a1-a4 flow-control
ProCurve(config)# no flow-control
ProCurve(config)# show interfaces brief
Status and Counters - Port Status

                    ¦ Intrusion                                  Flow
 Port  Type         ¦ Alert     Enabled Status Mode        Ctrl
 ----- ---------- + --------- ------- ------ ---------- -----
 A1    10/100TX     ¦ No        Yes     Down   10FDx      off
 A2    10/100TX     ¦ No        Yes     Down   10FDx      off
 A3    10/100TX     ¦ No        Yes     Down   10FDx      off
 A4    10/100TX     ¦ No        Yes     Down   10FDx      off
 A5    10/100TX     ¦ No        Yes     Down   10FDx      off
 A6    10/100TX     ¦ No        Yes     Down   10FDx      off
 A7    10/100TX     ¦ No        Yes     Up     10HDx      off
 A8    10/100TX     ¦ No        Yes     Down   10FDx      off
 .
 .
 .
```

Disables per-port flow control on ports A1 through A4 and global flow control. Flow control is now disabled on the switch.

Ports formerly configured for flow control.

Figure 10-9. Example Continued from Figure 10-8

Configuring a Broadcast Limit on the Switch

- **3400cl/6400cl Switches:** Broadcast-Limit on these switches is configured as a percentage on a per-port basis.
- **5300xl and 4200vl Switches:** Broadcast-Limit on these switches is configured globally (on all ports) as a fixed limit.

Broadcast-Limit on the 3400cl/6400cl Switches.

Syntax: interface < *port-list* > broadcast-limit < 0 - 99 > *(3400cl/6400cl Switches)*

Configures the theoretical maximum bandwidth percentage that the specified switch ports use to limit broadcasts and multicasts. The switch drops any broadcast or multicast traffic exceeding that limit. Zero (0) disables the feature.

Note: *This feature is not appropriate for networks requiring high levels of IPX or RIP broadcast traffic.*

For example, to configure a broadcast limit of 70% on ports 1-12:

```
ProCurve(config)# interface 1-12 broadcast-limit 70
```

To later disable broadcast limiting on ports 11 and 12:

```
ProCurve(config)# interface 11-12 broadcast-limit 0
```

Broadcast-Limit on the 5300xl and 4200vl Switches.

Syntax: [no] broadcast-limit

Enables or disables broadcast limiting for outbound broadcasts on all ports on the switch. When enabled, this command limits outbound broadcast packets to 1,000 per second on each port, regardless of packet size.

Note: *This feature is not appropriate for networks requiring high levels of IPX or RIP broadcast traffic.*

Syntax: show config

Displays the startup-config file. The broadcast limit setting appears here if enabled and saved to the startup-config file.

Syntax: show running-config

Displays the running-config file. The broadcast limit setting appears here if enabled. If the setting is not also saved to the startup-config file, rebooting the switch returns broad cast limit to the setting currently in the startup-config file.

For example, the following command enables broadcast limiting on all ports on the switch:

```
ProCurve(config)# broadcast-limit
```

Configuring Auto-MDIX

Copper ports on the switch can automatically detect the type of cable configuration (MDI or MDI-X) on a connected device and adjust to operate appropriately.

This means you can use a “straight-through” twisted-pair cable or a “cross-over” twisted-pair cable for any of the connections—the port makes the necessary adjustments to accommodate either one for correct operation. The following port types on your switch support the IEEE 802.3ab standard, which includes the “Auto MDI/MDI-X” feature:

Series 5300xl and Series 4200vl Switches	Series 3400cl Switches
10/100-TX xl module ports	10/100/1000-T ports
100/1000-T xl module ports	
10/100/1000-T xl module ports	

(MDI/MDI-X does not apply to the optional 10-gigabit ports on the Series 3400cl switches or the 10-gigabit ports on the Series 6400cl switches.)

Using the above ports:

- If you connect a copper port using a straight-through cable on a Series 5300xl, Series 4200vl, or Series 3400cl switch to a port on another switch or hub that uses MDI-X ports, the 5300xl, 4200vl, or 3400cl switch port automatically operates as an MDI port.
- If you connect a copper port using a straight-through cable on a Series 5300xl, Series 4200vl, or Series 3400cl switch to a port on an end node, such as a server or PC, that uses MDI ports, the 5300xl, 4200vl, or 3400cl switch port automatically operates as an MDI-X port.

HP Auto-MDIX was developed for auto-negotiating devices, and was shared with the IEEE for the development of the IEEE 802.3ab standard. HP Auto-MDIX and the IEEE 802.3ab Auto MDI/MID-X feature are completely compatible. Additionally, HP Auto-MDIX supports operation in forced speed and duplex modes.

If you want more information on this subject please refer to the *IEEE 802.3ab Standard Reference*.

For more information on MDI-X, refer to the appendix titled "Switch Ports and Network Cables" in the *Installation and Getting Started Guide* for your switch.

Manual Override. If you require control over the MDI/MDI-X feature you can set the switch to either of two non-default modes:

- Manual MDI
- Manual MDI-X

Table 10-2 shows the cabling requirements for the MDI/MDI-X settings.

Table 10-2. Cable Types for Auto and Manual MDI/MDI-X Settings

Setting	MDI/MDI-X Device Type	
	PC or Other MDI Device Type	Switch, Hub, or Other MDI-X Device
Manual MDI	Crossover Cable	Straight-Through Cable
Manual MDI-X	Straight-Through Cable	Crossover Cable
Auto-MDI-X (The Default)	Either Crossover or Straight-Through Cable	

The Auto-MDIX features apply only to copper port switches using twisted-pair copper Ethernet cables.

Syntax: interface < *port-list* > mdix-mode < auto-mdix | mdi | mdix >

auto-mdix *is the automatic, default setting. This configures the port for automatic detection of the cable (either straight-through or crossover).*

mdi *is the manual mode setting that configures the port for connecting to either a PC or other MDI device with a crossover cable, or to a switch, hub, or other MDI-X device with a straight-through cable.*

mdix *is the manual mode setting that configures the port for connecting to either a switch, hub, or other MDI-X device with a crossover cable, or to a PC or other MDI device with a straight-through cable.*

Syntax: show interfaces config

Lists the current per-port Auto/MDI/MDI-X configuration.

Syntax: show interfaces brief

Where a port is linked to another device, this command lists the MDI mode the port is currently using. In the case of ports configured for **Auto** (**auto-mdix**), *the MDI mode appears as either* **MDI** *or* **MDIX**, *depending upon which option the port has negotiated with the device on the other end of the link. In the case of ports configured for* **MDI** *or* **MDIX**, *the mode listed in this display matches the configured setting. If the link to another device was up, but has gone down, this command shows the last operating MDI mode the port was using. If a port on a given switch has not detected a link to another device since the last reboot, this command lists the MDI mode to which the port is currently configured.*

For example, **show interfaces config** displays the following data when port A1 is configured for **auto-mdix**, port A2 is configured for **mdi**, and port A3 is configured for **mdix**.

```
ProCurve(config)# show interfaces config

 Port Settings

  Port  Type       | Enabled Mode         Flow Ctrl MDI
  ----- --------- + ------- ------------ ---------|----|
  A1    10/100TX   | Yes     Auto         Disable  |Auto|
  A2    10/100TX   | Yes     Auto         Disable  |MDI |
  A3    10/100TX   | Yes     Auto         Disable  |MDIX|
  A4    10/100TX   | Yes     Auto         Disable  |Auto|
  A5    10/100TX   | Yes     Auto         Disable  |Auto|
   .       .         .       .              .      |  .|
   .       .         .       .              .      |  .|
   .       .         .       .              .      |  .|
```

Per-Port MDI Configuration

Figure 10-10. Example of Displaying the Current MDI Configuration

```
ProCurve(config)# show interfaces brief

 Status and Counters - Port Status

                   | Intrusion                          MDI   Flow
  Port  Type       | Alert     Enabled Status Mode     Mode  Ctrl
  ----- --------- + --------- ------- ------ ---------|-----|-----
  A1    10/100TX   | No        Yes     Up     100FDx   | MDIX | off
  A2    10/100TX   | No        Yes     Up     100FDx   | MDI  | off
  A3    10/100TX   | No        Yes     Up     100FDx   | MDIX | off
  A4    10/100TX   | No        Yes     Down   10FDx    | Auto | off
  A5    10/100TX   | No        Yes     Down   10FDx    | Auto | off
   .       .         .         .       .      .        |  .   |  .
   .       .         .         .       .      .        |  .   |  .
   .       .         .         .       .      .        |  .   |  .
```

Per-Port MDI Operating Mode

Figure 10-11. Example of Displaying the Current MDI Operating Mode

Note

Upgrading the Switch Series 5300xl Operating System from E_07.*XX* or earlier:

1. Copper ports in auto-negotiation still default to **auto-mdix** mode.
2. Copper ports in forced speed/duplex default to **mdix** mode.

For a fresh installation of the operating system, **auto-mdix** is the default.

Web: Viewing Port Status and Configuring Port Parameters

In the web browser interface:

1. Click on the **Configuration** tab.
2. Click on **[Port Configuration]**.
3. Select the ports you want to modify and click on **[Modify Selected Ports]**.
4. After you make the desired changes, click on **[Apply Settings]**.

Note that the web browser interface displays an existing port trunk group. However, to configure a port trunk group, you must use the CLI or the menu interface. For more on this topic, refer to chapter 13, “Port Trunking” .

Using Friendly (Optional) Port Names

Feature	Default	Menu	CLI	Web
Configure Friendly Port Names	Standard Port Numbering	n/a	page 19	n/a
Display Friendly Port Names	n/a	n/a	page 21	n/a

This feature enables you to assign alphanumeric port names of your choosing to augment automatically assigned numeric port names. This means you can configure meaningful port names to make it easier to identify the source of information listed by some **Show** commands. (Note that this feature *augments* port numbering, but *does not replace* it.)

Configuring and Operating Rules for Friendly Port Names

- At either the global or context configuration level you can assign a unique name to a port. You can also assign the same name to multiple ports.
- The friendly port names you configure appear in the output of the **show name [*port-list*]**, **show config**, and **show interface <*port-number*>** commands. They do not appear in the output of other show commands or in Menu interface screens. (See "Displaying Friendly Port Names with Other Port Data" on page 10-21.)
- Friendly port names are not a substitute for port numbers in CLI commands or Menu displays.
- Trunking ports together does not affect friendly naming for the individual ports. (If you want the same name for all ports in a trunk, you must individually assign the name to each port.)
- A friendly port name can have up to 64 contiguous alphanumeric characters.
- Blank spaces within friendly port names are not allowed, and if used, cause an **invalid input** error. (The switch interprets a blank space as a name terminator.)
- In a port listing, **not assigned** indicates that the port does not have a name assignment other than its fixed port number.
- To retain friendly port names across reboots, you must save the current running-configuration to the startup-config file after entering the friendly port names. (In the CLI, use the **write memory** command.)

Configuring Friendly Port Names

Syntax: interface < *port-list* > name < *port-name-string* >
Assigns a port name to port-list.

Syntax: no interface < *port-list* > name
Deletes the port name from port-list.

Configuring a Single Port Name. Suppose that you have connected port A3 on the switch to Bill Smith's workstation, and want to assign Bill's name and workstation IP address (10.25.101.73) as a port name for port A3:

```
ProCurve(config)# int A3 name Bill_Smith@10.25.101.73
ProCurve(config)# write mem
ProCurve(config)# show name A3
 Port Names
  Port : A3
   Type : 10/100TX
   Name : Bill_Smith@10.25.101.73
```

Figure 10-12. Example of Configuring a Friendly Port Name

Configuring the Same Name for Multiple Ports. Suppose that you want to use ports A5 through A8 as a trunked link to a server used by a drafting group. In this case you might configure ports A5 through A8 with the name "Draft-Server:Trunk".

```
ProCurve(config)# int A5-A8 name Draft-Server:Trunk
ProCurve(config)# write mem
ProCurve(config)# show name 5-8
 Port Names

  Port : A5
   Type : 10/100TX
   Name : Draft-Server:Trunk

  Port : A6
   Type : 10/100TX
   Name : Draft-Server:Trunk

  Port : A7
   Type : 10/100TX
   Name : Draft-Server:Trunk

  Port : A8
   Type : 10/100TX
   Name : Draft-Server:Trunk
```

Figure 10-13. Example of Configuring One Friendly Port Name on Multiple Ports

Displaying Friendly Port Names with Other Port Data

You can display friendly port name data in the following combinations:

- **show name**: Displays a listing of port numbers with their corresponding friendly port names and also quickly shows you which ports do not have friendly name assignments. (**show name** data comes from the running-config file.)
- **show interface <*port-number*>**: Displays the friendly port name, if any, along with the traffic statistics for that port. (The friendly port name data comes from the running-config file.)
- **show config**: Includes friendly port names in the per-port data of the resulting configuration listing. (**show config** data comes from the startup-config file.)

To List All Ports or Selected Ports with Their Friendly Port Names.

This command lists names assigned to a specific port.

Syntax: show name [*port-list*]

Lists the friendly port name with its corresponding port number and port type. The **show name** *command without a port list shows this data for all ports on the switch.*

For example:

```
ProCurve(config)# show name
 Port Names
  Port Type       Name
  ---- --------- -------------------------
  A1   10/100TX  not assigned
  A2   10/100TX  not assigned
  A3   10/100TX  Bill_Smith@10.25.101.73
  A4   10/100TX  not assigned
  A5   10/100TX  Draft-Server:Trunk
  A6   10/100TX  Draft-Server:Trunk
  A7   10/100TX  Draft-Server:Trunk
  A8   10/100TX  Draft-Server:Trunk
  A9   10/100TX  not assigned
  A10  10/100TX  not assigned
  A11  10/100TX  not assigned
  A12  10/100TX  not assigned
  .       .        .      .
  .       .        .      .
  .       .        .      .
```

Ports Without "Friendly"

Friendly port names assigned in previous examples.

Figure 10-14. Example of Friendly Port Name Data for All Ports on the Switch

```
ProCurve(config)# show name A2,A3,A5
 Port Names
  Port : A2
   Type : 10/100TX
   Name : not_assigned

  Port : A3
   Type : 10/100TX
   Name : Bill_Smith@10.25.101.73

  Port : A5
   Type : 10/100TX
   Name : Draft-Server:Trunk
```

Port Without a "Friendly" Name

Friendly port names assigned in previous examples.

Figure 10-15. Example of Friendly Port Name Data for Specific Ports on the Switch

Including Friendly Port Names in Per-Port Statistics Listings. A friendly port name configured to a port is automatically included when you display the port's statistics output.

Syntax: show interface < *port-number* >

Includes the friendly port name with the port's traffic statistics listing.

For example, if you configure port A1 with the name "O'Connor_10.25.101.43", the show interface output for this port appears similar to the following:

```
ProCurve(config)# show interface A1
 Status and Counters - Port Counters for port A1

  Name   : O'Connor@10.25.101.43

  Link Status      : Up

  Bytes Rx         : 894,568              Bytes Tx         : 2470
  Unicast Rx       : 1179                 Unicast Tx       : 13
  Bcast/Mcast Rx   : 5280                 Bcast/Mcast Tx   : 13

  FCS Rx           : 36                   Drops Tx         : 0
  Alignment Rx     : 2                    Collisions Tx    : 0
  Runts Rx         : 0                    Late Colln Tx    : 0
  Giants Rx        : 0                    Excessive Colln  : 0
  Total Rx Errors  : 38                   Deferred Tx      : 0
```

Friendly Port Name

Figure 10-16. Example of a Friendly Port Name in a Per-Port Statistics Listing

For a given port, if a friendly port name does not exist in the running-config file, the `Name` line in the above command output appears as:

```
Name   :  not assigned
```

To Search the Configuration for Ports with Friendly Port Names.

This option tells you which friendly port names have been saved to the startup-config file. (**show config** does not include ports that have only default settings in the startup-config file.)

Syntax: show config

Includes friendly port names in a listing of all interfaces (ports) configured with non-default settings. Excludes ports that have neither a friendly port name nor any other non-default configuration settings.

For example, if you configure port A1 with a friendly port name:

```
ProCurve(config)# int A1 name Print Server@10.25.101.43
ProCurve(config)# write mem
ProCurve(config)# int A2 name Herbert's PC

ProCurve(config)# show config

 Startup configuration:
; J4850A Configuration Editor; Created on release #E.08.30
hostname "HPswitch"
time daylight-time-rule None
no cdp run
interface A1
   name "Print_Server@10.25.101.43"
exit
snmp-server community "public" Unrestricted
vlan 1
   name "DEFAULT_VLAN"
   untagged 1-24
   ip address dhcp-bootp
   exit
no aaa port-access authenticator active
```

This command sequence saves the friendly port name for port A1 in the startup-config file. The name entered for port A2 is not saved because it was executed after **write memory**.

Listing includes friendly port name for port A1 only.

In this case, **show config** lists only port A1. Executing **write mem** after entering the name for port A2, and then executing show config again would result in a listing that includes both

Figure 10-17. Example Listing of the Startup-Config File with a Friendly Port Name Configured (and Saved)

— This page is intentionally unused. —

11

Power Over Ethernet (PoE) Operation for the Series 5300xl Switches

Contents

PoE Operation on the Series 5300xl Switches 11-2

Introduction 11-2

PoE Terminology 11-3

Overview of Operation 11-4

Related Publications 11-4

General PoE Operation 11-5

Configuration Options 11-5

PD Support 11-6

Power Priority Operation 11-8

Configuring PoE Operation 11-10

Changing the PoE Port Priority Level 11-10

Disabling or Re-Enabling PoE Port Operation 11-11

Changing the Threshold for Generating a Power Notice 11-11

Configuring Optional PoE Port Identifiers 11-12

Viewing PoE Configuration and Status 11-15

Displaying the Switch's Global PoE Power Status 11-15

Displaying an Overview of PoE Status on All Ports 11-16

Displaying the PoE Status on Specific Ports 11-17

Planning and Implementing a PoE Configuration 11-19

Assigning PoE Ports to VLANs 11-19

Applying Security Features to PoE Configurations 11-20

Assigning Priority Policies to PoE Traffic 11-20

Calculating the Maximum Load for an xl PoE Module 11-21

PoE Operating Notes 11-23

PoE Event Log Messages 11-23

"Informational" PoE Event-Log Messages 11-23

"Warning" PoE Event-Log Messages 11-25

PoE Operation on the Series 5300xl Switches

The Power Over Ethernet (PoE) features described in this chapter operate on ProCurve Switch Series 5300xl devices running software release E.08.20 (or greater), with one or more ProCurve Switch xl PoE (J8161A) modules installed. Each PoE module must be connected to either of the following:

- ProCurve 600 Redundant and External Power (J8168A) Supply (HP 600 RPS/EPS)
- ProCurve 610 External Power (J8169A) Supply (HP 610 EPS)

(The ProCurve 3400cl/6400cl switches do not include PoE operation.)

Introduction

PoE technology allows IP telephones, wireless LAN access points, and other appliances to receive power and transfer data over existing LAN cabling. (For more on this topic, refer to edition 2 or later of the *ProCurve xl Modules Installation Guide* shipped with your optional J8161A Switch xl PoE Module (beginning in April, 2004).

PoE Terminology

Term	Use in this Manual
active PoE port	A PoE-enabled port connected to a PD requesting power.
priority class	Refers to the type of power prioritization where an xl PoE module uses **Low** (the default), **High**, and **Critical** priority assignments to determine which groups of ports will receive power. Note that power priority rules apply on a per-module basis, and only if PoE provisioning on a given module becomes oversubscribed.
EPS	External Power Supply; for example, an HP 600 ProCurve RPS/EPS or a ProCurve 610 EPS. An EPS device provides power to provision PoE ports on a module. See also "RPS", below.
MPS	Maintenance Power Signature; the signal a PD sends to the switch to indicate that the PD is connected and requires power. Refer to figure 11-11-4 on page 11-18.
Over-Subscribe	The state of a J8161A xl PoE module where there are more PDs requesting PoE power than the module has power to accommodate.
PD	Powered Device. This is an IEEE 802.3af-compliant device that receives its power through a direct connection to a 10/100Base-TX PoE RJ-45 port in an xl PoE module. Examples of PDs include Voice-over-IP (VoIP) telephones, wireless access points, and remote video cameras.
port-number priority	Refers to the type of power prioritization where, within a priority class, an xl PoE module assigns the highest priority to the lowest-numbered port in the module, the second-highest priority to the second lowest-numbered port in the module, and so-on. Note that power priority rules apply only if PoE provisioning on the module becomes oversubscribed.
PoE	Power-Over-Ethernet; the method by which PDs receive power from an xl PoE module (in compliance with the IEEE 802.3AF standard).
PSE	Power-Sourcing Equipment. A PSE, such as a J8161A xl PoE module installed in a Series 5300xl switch, provides power to IEEE 802.3AF-compliant PDs directly connected to the ports on the module. The xl PoE module is an *endpoint* PSE.
RPS	Redundant Power Supply; for example, the non-EPS operation of an HP 600 RPS/EPS. An RPS device provides power to a switch if the switch's internal power supply fails. RPS power does not provision PoE ports in modules installed in the 5300xl switches. See also "EPS", above.
RPS/EPS	A device that delivers redundant power to run a switch and external power to support PoE operation on a switch.
xl PoE Module	Refers to a ProCurve Switch xl PoE Module (J8161A).

Overview of Operation

A J8161A xl PoE module is a PSE device that receives PoE power from an external EPS device and distributes this power to the PDs connected to the xl PoE module's RJ-45 ports. The xl PoE module receives either 204 watts or 408 watts from the EPS, depending on whether the EPS is supporting one or two PSE devices.

Note

You can connect either a PoE device (PD) or a non-PoE device to a port configured for PoE operation on a J8161A xl PoE module.

Regarding Cat-5 cabling for PoE, the 802.3af standard allows either the spare pin/wire pairs or the data pin/wire pairs for PoE power transmission. A PoE module installed in a series 5300xl device supplies PoE power over the data pin/wire pairs. For more on this topic, refer to the *PoE Planning and Implementation Guide* (p/n 5990-6045, Nov. 2003 or later) available on the ProCurve Networking web site. (See "Getting Documentation From the Web" on page 1-6.)

Using the commands described in this chapter, you can:

- Configure a non-default power threshold for SNMP and Event Log reporting of PoE consumption on either all PoE ports on the switch or on all PoE ports in one or more PoE modules.
- Specify the port priority you want each xl PoE module to use for provisioning PoE power in the event that a given module's PoE resources become oversubscribed.
- Enable or disable PoE operation on individual ports. (In the default configuration, and with software release E.08.20 or greater installed, each xl PoE module installed in the switch enables PoE power on all 10/100-TX ports in the module, subject to PoE priority if the PoE resources on a given PoE xl module are oversubscribed.)
- Monitor PoE status and performance per module.

Related Publications

This chapter introduces general PoE operation, PoE configuration and monitoring commands, and Event Log messages related to PoE operation on a ProCurve Switch Series 5300xl device with one or more PoE modules installed and supported by the necessary external power supplies. The following two manuals provide further information:

- For information on installing a ProCurve Switch xl PoE Module (J8161A), refer to the *ProCurve Switch xl Modules Installation Guide* provided with the module.
- To help you plan and implement a PoE system in your network, refer to edition 2 or later of the *PoE Planning and Implementation Guide*, which is available from either of the following sources:
  - The Documentation CD-ROM (version 3.6 or greater) shipped with your Switch Series 5300xl device after April, 2004.
  - The ProCurve Networking web site at **www.procurve.com**. (Click on **technical support**, then **Product manuals (all)**.)

The latest version of any ProCurve product guide is always on the ProCurve Networking web site. See to "Getting Documentation From the Web" on page 1-6.

General PoE Operation

Configuration Options

In the default configuration, all 10/100Base-TX ports on an xl PoE module installed in the switch are configured to support PoE operation. You can:

- Disable or re-enable per-port PoE operation on individual ports to help control power usage and avoid oversubscribing PoE resources.
- Configure per-port priority for allocating power in case a PoE module becomes oversubscribed and must drop power for some lower-priority ports to support the demand on other, higher-priority ports.
- Configure one of the following:
  - A global power threshold that applies to all modules on the switch. This setting acts as a trigger for sending a notice when the PoE power consumption on any xl PoE module installed in the switch crosses the configured global threshold level. (Crossing the threshold level in either direction—PoE power usage either increasing or decreasing—triggers the notice.) The default setting is 80%.
  - A per-slot power threshold that applies to an individual xl PoE module installed in the designated slot. This setting acts as a trigger for sending a notice when the module in the specified slot exceeds or goes below a specific level of PoE power consumption.

Note

The ports on a PoE module support standard networking links and PoE links. Thus, you can connect either a non-PoE device or a PD to a PoE-enabled port without reconfiguring the port.

PD Support

An xl PoE module must have a minimum of 15.4 watts of unused PoE power available when you connect an 802.3af-compliant PD, regardless of how much power the PD actually uses. Depending on the amount of power the EPS device delivers to a specific xl PoE module, there may or may not always be enough power available to connect and support 802.3af PoE operation on all 24 10/100-TX ports. For example, if an EPS device is supporting only one xl PoE module and no other PSEs, then there will be sufficient power available for all ports on the module. However, if the same EPS is supporting both an xl PoE module and another ProCurve PSE device then, depending on the power demand placed on the module by the PDs you connect, it is possible to oversubscribe the available PoE power on the module. In this case, one or more PDs connected to the module will not have power. That is:

- **Sufficient PoE Power Available:** When a new PD connects to an xl PoE module in the switch, and if the module has a minimum of 15.4 watts of unused PoE power available, the module supplies power to the port for that PD.
- **Insufficient PoE Power Available:** When a new PD connects to an xl PoE module, and if the module does not have a minimum of 15.4 watts of unused PoE power already available:
  - If the new PD connects to a port “X” having a *higher* PoE priority than another port “Y” that is already supporting another PD on the same module, then the module removes PoE power from port “Y” and delivers it to port “X”. In this case the PD on port “Y” loses power and the PD on port “X” receives power.
  - If the new PD connects to a port “X” having a *lower* priority than all other PoE ports currently providing power to PDs on the same module, then the module does not deliver PoE power to port “X” until one or more PDs using higher priority ports are removed.

Note that once a PD connects to a PoE port and begins operating, the port retains only enough PoE power to support the PD’s operation. Unneeded power becomes available for supporting other PD connections. Thus, while 15.4 watts must be available for an xl PoE module on the switch to begin supplying power to a port with a PD connected, 15.4 watts per port is not continually required if the connected PD requires less power. For example,

with 20 watts of PoE power remaining available on a module, you can connect one new PD without losing power to any currently connected PDs on that module. If that PD draws only 3 watts, then 17 watts remain available and you can connect at least one more PD to that module without interrupting power to any other PoE devices connected to the same module. If the next PD you connect draws 5 watts, then only 12 watts remain unused. With only 12 unused watts available, if you then connect yet another PD to a higher-priority PoE port, then the lowest-priority port on the module loses PoE power and remains unpowered until the module once again has 15.4 or more watts available. (For information on power priority, refer to "Power Priority Operation" on page 11-8.)

Disconnecting a PD from a PoE port causes the module to stop providing PoE power to that port and makes the power available to any other PoE ports on the module that have PDs connected and waiting for power. If the PD demand for power on a module becomes greater than the PoE power available on the module, then the module transfers power from its lower-priority ports to its higher-priority ports. (Ports not currently providing power to PDs are not affected.)

Note

15.4 watts of available power is required for an xl PoE module on a switch to begin delivering power to a port, such as when a newly connected PD is detected or when power is released from higher-priority ports. Depending on power demands, lower-priority ports on a module with high PoE power demand may occasionally lose power due to the demands of higher-priority ports on the same module. (Refer to "Power Priority Operation" on page 11-8.)

Table 11-1. xl PoE Module Maximum Power Allocations

Power-Sourcing Equipment (PSE) Load on the EPS	Power to PoE Module from External EPS[1]	PoE Power Available for the xl PoE (J8161A) Module
One xl PoE Module Only	408 Watts	Maximum (15.4 W) available to all ports on the module.
Two PSE Devices (Two xl PoE Modules, or one xl PoE Module and One ProCurve PoE Stackable Switch)	204 Watts	Depending on the power demand from the PDs, lower priority ports may not be provisioned. Refer to "Calculating the Maximum Load for an xl PoE Module" on page 11-21.

[1]If a ProCurve EPS device is supplying PoE power to two PSE devices, then both PSE devices receive 204 watts. If a ProCurve EPS device is delivering PoE power to only one PSE device, then that device receives 408 watts.

Power Priority Operation

When Does an xl PoE Module Prioritize Power Allocations? If an xl PoE module can provide power for all connected PD demand, it does not use its power priority settings to allocate power. However, if the PD power demand oversubscribes the available power, then the module prioritizes the power allocation to the ports that present a PD power demand. This causes the module to remove power from one or more lower-priority ports to meet the power demand on other, higher-priority ports. (This operation occurs, regardless of the order in which PDs connect to the module's PoE-enabled ports.) Note that each PoE xl module is a stand-alone priority domain. The switch does not prioritize one PoE module over another.

How Does an xl PoE Module Prioritize Power Allocations? xl PoE modules apply the following priority scheme:

- Using a *priority class* method, the module assigns a power priority of **Low** (the default), **High**, or **Critical** to each enabled PoE port.
- Using a *port-number priority* method, the module gives a lower-numbered port priority over a higher-numbered port within the same configured priority class.

Suppose, for example, that you configure the PoE priority for a module in slot C as shown in table 11-2.

Table 11-2. Example of PoE Priority Operation on an xl PoE Module

Port	Priority Setting	Configuration Command[1] and Resulting Operation with PDs connected to Ports C3 Through C24
C3 - C17	**Critical**	In this example, the following CLI command sets ports C3-C17 to **Critical**: `ProCurve(config)# interface c3-c17 power critical` The **Critical** priority class always receives power. If there is not enough power to provision PDs on all of the ports configured for this class, then no power goes to ports configured for **High** and **Low** priority. If there is enough power to provision PDs on only some of the critical-priority ports, then power is allocated to these ports in ascending order, beginning with the lowest-numbered port in the class, which, in this case, is port 3.
C18 - C21	**High**	In this example, the following CLI command sets ports C19-C22 to **High**: `ProCurve(config)# interface c19-c22 power high` The **High** priority class receives power only if all PDs on ports with a **Critical** priority setting are receiving power. If there is not enough power to provision PDs on all ports with a high priority, then no power goes to ports with a low priority. If there is enough power to provision PDs on only some of the high-priority ports, then power is allocated to these ports in ascending order, beginning, in this example, with port 18, until all available power is in use.
C22 - C24	**Low**	In this example, the CLI command sets ports C23-C24 to **Low**[2]: `ProCurve(config)# interface c23-c24 power low` This priority class receives power only if all PDs on ports with **High** and **Critical** priority settings are receiving power. If there is enough power to provision PDs on only some low-priority ports, then power is allocated to the ports in ascending order, beginning with the lowest-numbered port in the class (port 22, in this case), until all available power is in use.
C1 - C2	*- n/a -*	In this example, the CLI command disables PoE power on ports C1-C2: `ProCurve(config)# no interface c1-c2 power` There is no priority setting for the ports in this example.

[1] For a listing of PoE configuration commands, with descriptions, refer to "Configuring PoE Operation" on page 11-10.
[2] In the default PoE configuration, the ports are already set to the **low** priority. In this case, the command is not necessary.

Configuring PoE Operation

In the default configuration, PoE support is enabled on the 10/100Base-TX ports in an xl PoE (J8161A) module installed on the switch. The default priority for all ports is **Low** and the default power notification threshold is **80** (%). Using the CLI, you can:

- Change the PoE priority level on individual PoE ports
- Disable or re-enable PoE operation on individual PoE ports
- Change the threshold for generating a power level notice

Changing the PoE Port Priority Level

Syntax: interface < *port-list* > power [critical | high | low]

Reconfigures the PoE priority level on < *port-list* >*. For a given level, the module automatically prioritizes ports by port number (in ascending order). If there is not enough power available to provision all active PoE ports at a given priority level, then the lowest-numbered port at that level will be provisioned on a specific module first, and so on. An xl PoE module invokes configured PoE priorities only when it cannot provision all active PoE ports on that module.*

- **Critical:** *Specifies the highest-priority PoE support for* < *port-list* >*. The module provisions active PoE ports at this level before provisioning PoE ports at any other level.*
- **High**: *Specifies the second priority PoE support for* < *port-list* >*. The module provisions active PoE ports at this level before provisioning Low priority PoE ports.*
- **Low** *(the default): Specifies the third priority PoE support for* < *port-list* >*. The module provisions active PoE ports at this level only if there is power available after provisioning any active PoE ports at the higher priority levels.*

You can use one command to set the same priority level on PoE ports in multiple modules. For example, to configure the priority to **High** *for ports c5-c10, C23-C24, D1-D10, and D12, you could use this command:*

```
ProCurve(config)# interface c5-c10,c23-c24,d1-
d10,d12
```

Disabling or Re-Enabling PoE Port Operation

Syntax: [no] interface [e] < *port-list* > power

Re-enables PoE operation on < *port-list* > *and restores the priority setting in effect when PoE was disabled on* < *port-list* >. *The* **[no]** *form of the command disables PoE operation on* < *port-list* >. *(Default: All xl PoE ports on the module are enabled for PoE operation at* **Low** *priority.)*

Changing the Threshold for Generating a Power Notice

Syntax: power [slot < *slot-identifier* >] threshold < 1 - 99 >

This command specifies the PoE usage level (as a percentage of the PoE power available on a module) at which the switch generates a power usage notice. This notice appears as an SNMP trap and a corresponding Event Log message, and occurs when an xl PoE module's power consumption crosses the configured threshold value. That is, the switch generates a notice whenever the power consumption on a module either exceeds or drops below the specified percentage of the total PoE power available on the module.

This command configures the notification threshold for PoE power usage on either a global or per-module (slot) basis.

Without the **[slot < *slot-identifier* >]** *option, the switch applies one power threshold setting on all PoE modules installed in the switch. For example, suppose slots A, B, and C each have an xl PoE module installed. In this case, executing the following command sets the global notification threshold to 70% of available PoE power.*

```
ProCurve(config)# power threshold 70
```

With this setting, if an increasing PoE power demand crosses this threshold on the module in slot B, the switch sends an SNMP trap and generates this Event Log message:

```
Slot B POE usage has exceeded threshold of 70 %.
```

If the switch is configured for debug logging, it also sends the Event Log message to the configured debug destination(s).

On any PoE module, if an increasing PoE power load (1) exceeds the configured power threshold (which triggers the log message and SNMP trap), and then (2) later decreases and drops below the threshold again, the switch generates another SNMP trap, plus a message to the Event Log and any configured Debug destinations.

— Continued —

Syntax: power [slot < *slot-identifier* >] threshold < 1 - 99 > ***(Continued)***

To continue the preceding example, if the PoE power usage on the xl PoE module in slot B drops below 70%, another SNMP trap is generated and you will see this message in the Event Log:

```
Slot B POE usage is below threshold of 70 %.
```

For a message listing, refer to "PoE Event Log Messages" on page 11-23. (Default Global PoE Power Threshold: **80***)By using the* **[slot < *slot-identifier* >]** *option, you can specify different notification thresholds for different xl PoE modules installed in the switch. For example, you could set the power threshold for a PoE module in slot "A" to 75% and the threshold for the module in slot "B" to 68% by executing the following two commands:*

```
ProCurve(config)# power slot a threshold 75
ProCurve(config)# power slot b threshold 68
```

Note that the last **threshold** *command affecting a given slot supersedes the previous threshold command affecting the same slot. Thus, executing the following two commands in the order shown sets the threshold for the PoE module in slot "D" to 75%, but leaves the thresholds for any PoE modules in the other slots at 90%.*

```
ProCurve(config)# power threshold 90
ProCurve(config)# power slot d threshold 75
```

(If you reverse the order of the above two commands, all PoE modules in the switch will have a threshold of 90%.)

Configuring Optional PoE Port Identifiers

The **Configured Type** field enables you to configure a unique identifier for PoE ports that helps to identify the intended use for a given PoE port. Such identifiers are useful when viewing PoE status with the following commands:

show power-management brief (page 11-16)

show power-management < *port-list* > (page 11-17)

To configure a unique identifier for one or more PoE ports, use the switch's **setmib** command to change the identifier setting in the switch's MIB (Management Information Base), as described in the following steps.

1. Use the **walkmib pethPsePortType.< slot-# >** command to determine the MIB-based port number for the port to which you want to assign a **Configured Type** identifier. On the 5300xl switches the slot numbering is as follows:

Slot	Slot Number Used in the MIB
A	1
B	2
C	3
D	4
E*	5
F*	6
G*	7
H*	8

*5308xl only.

   Note that in the MIB, 26 port numbers are assigned to each slot designation. Thus, for example, with PoE modules in slots “A” and “B”, the actual, corresponding port numbers will be 1-24 and 27-50, respectively. (The port numbers “25”, “26”, “51”, and “52” are reserved.)

2. Use the **setmib pethPsePortType.*< slot-# >.< port-# >* -D *< identifier-string >*** command to configure the identifier you want for a specific port.

For example, suppose that you have a PoE xl Module installed in slot B and want to assign the identifier “Wireless-1” to port 1 in this slot. To do so, you would use the following commands:

```
ProCurve(config)# walkmib pethPsePortType.2
pethPsePortType.2.27 =
pethPsePortType.2.28 =
pethPsePortType.2.29 =
pethPsePortType.2.30 =
       .        .  .
       .        .  .
       .        .  .

ProCurve(config)# setmib pethPsePortType.2.27 -D Wireless-1
pethPsePortType.2.27 = Wireless-1

ProCurve(config)# show power-management brief

 Status and Counters - Port Power Status

        | Power            Configured       Detection   Power
  Port  | Enable  Priority Type             Status      Class
  ----- + ------- -------- ---------------- ----------- ------
  B1    | Yes     Low      Wireless-1       Searching   0
  B2    | Yes     Low                       Searching   0
  B3    | Yes     Low                       Searching   0
  B4    | Yes     Low                       Searching   0
   .      .       .                            .         .
   .      .       .                            .         .
   .      .       .                            .         .
```

Lists port numbers used by the MIB for slot "B".

MIB Designation for Port B1

Command to configure "Wireless-1" as the **Configured Type** identifier for port B1.

CLI response indicates successful command execution.

"Show" command lists the new **Configured Type** identifier.

Figure 11-1.Example of using the MIB To Configure a "Configured Type" Identifier for a Port

To remove a Configured Type identifier, use the setmib command with a blank space enclosed in quotes. For example, to return port B2 in the above figure to a null setting, use this command:

```
ProCurve(config)# setmib pethPsePortType.2.27 -D " "
```

For more on displaying PoE configuration and status, refer to "Viewing PoE Configuration and Status" on page 11-15.

Viewing PoE Configuration and Status

Displaying the Switch's Global PoE Power Status

Syntax: show power-management

Displays the switch's global PoE power status, including:

- **Maximum Power:** *Lists the maximum PoE wattage available to provision active PoE ports on the switch.*
- **Power In Use:** *Lists the amount of PoE power presently in use.*
- **Operational Status:** *Indicates whether PoE power is available on the switch. (Default:* **On** *; shows* **Off** *if PoE power is not available. Shows* **Faulty** *if internal or external PoE power is oversubscribed or faulty.)*
- **Usage Threshold (%)***: Lists the configured percentage of available PoE power provisioning the switch must exceed to generate a usage notice in the form of an Event Log message and an SNMP trap. If this event is followed by a drop in power provisioning below the threshold, the switch generates another SNMP trap and Event Log message. Event Log messages are also sent to any optionally configured debug destinations. (Default:* **80%***)*

For example, in the default PoE configuration, when the switch is running with several ports on the xl PoE modules in slots C and D supporting PD loads, **show power-management** displays data similar to the following:

```
ProCurve(config)# show power-management

 Status and Counters - System Power Status for slot C

  Maximum Power  : 204 W           Operational Status  : On
  Power In Use   :  46 W +/- 6 W   Usage Threshold (%) : 80


 Status and Counters - System Power Status for slot D

  Maximum Power  : 204 W           Operational Status  : On
  Power In Use   :  34 W +/- 6 W   Usage Threshold (%) : 80
```

Figure 11-2. Example of Show Power-Management Output

Displaying an Overview of PoE Status on All Ports

Syntax: show power-management brief

Displays the following port power status:

- **Port:** *Lists all PoE-capable ports on the switch.*
- **Power Enable:** *Shows* **Yes** *for ports enabled to support PoE (the default) and* **No** *for ports on which PoE is disabled.*
- **Priority:** *Lists the power priority (***Low**, **High**, and **Critical***) configured on ports enabled for PoE. (For more on this topic, refer to the power command description under "Configuring PoE Operation" on page 11-10.)*
- **Configured Type:** *If configured, shows the user-specified identifier for the port. If not configured, the field is empty. Refer to "Configuring Optional PoE Port Identifiers" on page 11-12.*
- **Detection Status:**
  - **Searching:** *The port is trying to detect a PD connection.*
  - **Delivering:** *The port is delivering power to a PD.*
  - **Disabled:** *On the indicated port, either PoE support is disabled or PoE power is enabled but the xl PoE module does not have enough power available to supply the port's power needs.*
  - **Fault:** *The switch detects a problem with the connected PD.*
- **Power Class:** *Shows the 802.3af power class of the PD detected on the indicated port. Classes include:*

  0: *0.44w to 12.95w*
  1: *0.44w to 3.84w*
  2: *3.84w to 6.49w*
  3: *6.49w to 12.95w*
  4: *reserved*

For example, **show power-management brief** displays this output:

```
ProCurve(config)# show power-management brief

 Status and Counters - Port Power Status

        | Power            Configured       Detection   Power
 Port   | Enable  Priority Type             Status      Class
 ----- + ------- -------- ---------------- ---------- -------
 C1     | Yes     Critical Telephone        Delivering  1
 C2     | Yes     Critical Telephone        Delivering  1
 C3     | Yes     High     Wireless         Delivering  3
 C4     | Yes     High     Wireless         Delivering  3
 C5     | Yes     Low                       Searching   0
 C6     | Yes     Low                       Searching   0
 C7     | Yes     Low                       Searching   0
 C8     | Yes     Low                       Searching   0
  .       .        .          .                .        .
  .       .        .          .                .        .
  .       .        .          .                .        .
```

Ports C1 through C4 are delivering power. The remaining ports are available to supply power, but currently do not detect a connected PD.

Figure 11-3. Example of Show Power-Management Brief Output

Displaying the PoE Status on Specific Ports

Syntax: show power-management < *port-list* >

Displays the following PoE status and statistics (since the last reboot) for each port in < *port-list* >:

- **Power Enable:** *Shows* **Yes** *for ports enabled to support PoE (the default) and* **No** *for ports on which PoE is disabled. Note that for ports on which power is disabled, this is the only field displayed by* **show power-management** ***< port-list >***.
- **Priority:** *Lists the power priority (***Low**, **High**, and **Critical***) configured on ports enabled for PoE. (For more on this topic, refer to the power command description under "Configuring PoE Operation" on page 11-10.)*
- **Detection Status:**
  - **Searching:** *The port is available to support a PD.*
  - **Delivering:** *The port is delivering power to a PD.*
  - **Disabled:** *PoE power is enabled on the port but the xl PoE module does not have enough power available to supply the port's power needs.*
- **Fault:** *The switch detects a problem with the connected PD.*
- **Over Current Cnt:** *Shows the number of times a connected PD has attempted to draw more than 15.4 watts. Each occurrence generates an Event Log message.*

— Continued —

Syntax: show power-management < *port-list* > ***(Continued)***

- **Power Denied Cnt:** *Shows the number of times PDs requesting power on the port have been denied due to insufficient power available. Each occurrence generates an Event Log message.*
- **Voltage:** The total voltage, in dV, being delivered to PDs.
- **Power:** The total power, in mW, being delivered to PDs.
- **Configured Type:** *If configured, shows the user-specified identifier for the port. If not configured, the field is empty. Refer to "Configuring Optional PoE Port Identifiers" on page 11-12.*
- **Power Class:** *Shows the power class of the PD detected on the indicated port. Classes include:*

  0: *0.44w to 12.95w* **2**: *3.84w to 6.49w* **4:** *reserved*
  1: *0.44w to 3.84w* **3**: *6.49w to 12.95w*

- **MPS Absent Cnt:** *This value shows the number of times a detected PD has no longer requested power from the port. Each occurrence generates an Event Log message. ("MPS" refers to the "Maintenance Power Signature". Refer to "PoE Terminology" on page 11-3.)*
- **Short Cnt:** *Shows the number of times the switch provided insufficient current to a connected PD.*
- **Current:** *The total current, in mA, being delivered to PDs.*

For example, if you wanted to view the PoE status of ports C1 and D5, you would use **show power-management c1,d5** to display the data:

```
ProCurve(config)# show power-management d4-d5

Status and Counters - Port Power Status for port D4

Power Enable       : Yes

Priority           : Low              Configured Type    :
Detection  Status  : Delivering       Power Class        : 0

Over Current Cnt   : 0                MPS Absent Cnt     : 0
Power Denied Cnt   : 0                Short Cnt          : 0

Voltage            : 492 dV           Current            : 52 mA
Power              : 14210 mW

Status and Counters - Port Power Status for port D5

Power Enable       : No
```

Example of command output for a port on which power is enabled.

Example of command output for a port on which power is disabled.

Figure 11-4. Example of Show Power-Management < *port-list* > Output

Planning and Implementing a PoE Configuration

This section provides an overview of some considerations for planning a PoE application. For additional information on this topic, refer to the *ProCurve PoE Planning and Implementation Guide*.

Some of the elements you may want to consider for a PoE installation include:

- Port assignments to VLANs
- Use of security features
- Power requirements

This section can help you to plan your PoE installation. If you use multiple VLANs in your network, or if you have concerns about network security, you should read the first two topics. If your PoE installation comes close to (or is likely to exceed) the system's ability to supply power to all devices that may request it, then you should also read the third topic. (If it is unlikely that your installation will even approach a full utilization of the PoE power available, then you may find it unnecessary to spend much time on calculating PoE power scenarios.)

Assigning PoE Ports to VLANs

If your network includes VLANs, you may want to assign various PoE-configured ports to specific VLANs. For example, if you are using PoE telephones in your network, you may want to assign ports used for telephone access to a VLAN reserved for telephone traffic.

Applying Security Features to PoE Configurations

You can utilize security features built into the switch to control device or user access to the network through PoE ports in the same way as non-PoE ports.

- **MAC Address Security:** Using Port Security, you can configure each switch port with a unique list of MAC addresses for devices that are authorized to access the network through that port. For more information, refer to the chapter titled "Configuring and Monitoring Port Security" in the *Access Security Guide* for your switch.
- **Username/Password Security:** If you are connecting a device that allows you to enter a username and password that is forwarded to a networked server for authentication, then you can also configure the following security features:
  - Local username and password
  - TACACS+
  - RADIUS Authentication and Accounting
  - 802.1X Authentication

For more information on security options, refer to the latest edition of the *Access Security Guide* for your switch. (The ProCurve Networking web site offers the latest version of all ProCurve product publications. Refer to “Getting Documentation from the Web” in chapter 1, “Getting Started”.)

Assigning Priority Policies to PoE Traffic

You can use the configurable QoS (Quality of Service) features in the switch to create prioritization policies for traffic moving through PoE ports. Table 11-3 lists the available classifiers and their order of precedence.

Table 11-3. Classifiers for Prioritizing Outbound Packets

Priority	QoS Classifier
1	UDP/TCP Application Type (port)
2	Device Priority (destination or source IP address)
3	IP Type of Service (ToS) field (IP packets only)
4	Protocol Priority (IP, IPX, ARP, DEC LAT, AppleTalk, SNA, and NetBeui)
5	VLAN Priority
6	Incoming source-port on the switch
7	Incoming 802.1p priority (present in tagged VLAN environments)

For more on this topic, refer to the chapter titled "Quality of Service: Managing Bandwidth More Effectively" in the *Advanced Traffic Management Guide* for your switch.

Calculating the Maximum Load for an xl PoE Module

Since the full PoE load on an xl PoE module receiving 408 watts (from an EPS supporting only that module) cannot exceed 369.6 watts (24 ports with a maximum of 15.4 watts per port), there is no concern for overloading the module's PoE capacity. However, for xl PoE modules receiving 204 watts due to EPS power-sharing with another PoE device, it is possible to exceed the maximum supportable load. Also, when planning the PoE load, the following factors apply per-module:

- When first connecting an appliance to a PoE port, the xl PoE module must have a minimum of 15.4 watts of available PoE power. PoE power is "available" if it is either not currently in use or can be acquired by (automatically) removing PoE power from another, lower-priority port on the module. (See to "PD Support" on page 11-6.)
- After an appliance is connected to a PoE port, the switch reduces the power requirement for that port from the initial 15.4 watts to the actual power level the appliance requires.

Thus, after you have connected all but the last planned appliance to a PoE module, there must be a minimum of 15.4 watts of unused PoE power available on the module to support adding the final appliance. That is, where:

n = the total number of appliances you want to connect to one xl PoE module

and

w = the total PoE power required to operate (n - 1) appliances

then, the following must be true:

$$w + 15.4 \leq 204$$

or

$$(204 - 15.4) \geq w$$

For example, suppose you have 24 identical appliances to connect to an xl PoE module receiving 204 watts of PoE power. For this example, each appliance requires 8.3 watts to operate. In this case, the module would support only 23 of these appliances at any given time because there would not be

enough unused power to meet the minimum of 15.4 watts required to support the initial bring-up of the 24th appliance. That is, 204 - (23 x 8.3) = 13.1. Because the module provisions power on the basis of the priority scheme described on page 11-10 (under the **interface < *port-list* > power [critical | high | low]** syntax), you can still fully populate the module with appliances. In this case, the lowest-priority port will not receive power unless an appliance in a higher-priority port is disconnected.

There is also a scenario where a device on a lower-priority port can experience a power cycle (temporarily lose power) while a higher-priority port is bringing up a PoE device. Suppose, for example, that:

1. An xl PoE module in slot B, with all ports configured at the default **Low** priority, is receiving 204 watts of power from an EPS.
2. The 21 PoE devices on ports B2 - B22 draw 9.0 watts of power each (9 x 21 = 189), leaving 15.0 watts unused, which is less than the 15.4 watt minimum needed to add another PoE device to the module. (Refer to "PD Support" on page 11-6.)
3. The system operator plugs a 7.0-watt PoE device into port B1, which is the highest-priority port in slot B.

In the above scenario, there is less than 15.4 watts available to support the initial bringup of the newly installed device on port B1. As a result, port B22 (the lowest-priority port on the module) temporarily loses power so that there is enough power to add the new device on port B1. After the new device begins operation, the power demand on port B1 drops to 7 watts. At this point, there are 20 devices consuming 9 watts each, and 1 device consuming 7 watts, for a total of 187 watts, and the module now has 17 watts of unused power available. Since this exceeds the minimum of 15.4 watts required to bring up any PoE device, there is now enough power available to bring back up the device on port B22.

PoE Operating Notes

- Simply disabling a PoE port does *not* affect power delivery through that port. To cycle the power on a PD receiving power from a PoE port on the switch, disable, then re-enable the power to that port. For example, to cycle the power on a PoE device connected to port 1 on an xl PoE module installed in slot D:

```
ProCurve(config)# no interface d1 power
ProCurve(config)# interface d1 power
```

PoE Event Log Messages

PoE operation generates these Event Log messages. You can also configure the switch to send these messages to a configured debug destination (terminal device or SyslogD server).

"Informational" PoE Event-Log Messages

`I <MM/DD/YY> <HH:MM:SS> <chassis|ports>:`

Message header, with severity, date, system time, and system module type (`chassis` *or* `ports`*). For more information on Event Log operation, including severity indicators, refer to "Using the Event Log To Identify Problem Sources" on page C-27.*

`Slot <slot-id> Ext Power Supply connected, supplying <actual-power> W of <avail-power> W max.`

The switch detected an EPS (External Power Supply) on the indicated slot and began receiving the wattage indicated by `<actual-power>`*.* The `<avail-power>` *field indicates the maximum power (wattage) the detected EPS is capable of delivering.*

`Slot <slot-id> Ext Power Supply disconnected`

The indicated slot has lost contact with an external power supply.

`Slot <slot-id> POE usage is below configured threshold of <1 - 99> %`

Indicates that POE usage on the module in the indicated slot has decreased below the threshold specified by the last execution of the **power threshold** *command affecting that module. This message occurs if, after the last reboot, the PoE demand on the module exceeded the power threshold and then later dropped below the threshold value.*

`port <port-id> applying power to PD.`

A PoE device is connected to the indicated port and receiving power.

`port <port-id> PD detected.`

The switch has detected a PoE device connected to the indicated port.

"Warning" PoE Event-Log Messages

`W <MM/DD/YY> <HH:MM:SS> chassis:`

Message header, with severity, date, system time, and system module type. For more information on Event Log operation, including severity indicators, refer to "Using the Event Log To Identify Problem Sources" on page C-27".

`Slot <slot-id> Ext Power Supply connected but not responding.`

The switch detects an external power supply on the module in the indicated slot, but is not receiving power from the device.

`Slot <slot-id> Ext Power Supply failure: <fault-type> Failures:`

Indicates an external power supply failure for the module in the indicated slot, where `<fault-type>` *is one of the following:*

- *Over Current fault: The external power supply reported a fault condition. Contact your ProCurve support representative.*
- *Fan fault: A fan in an external power supply has failed.*
- *Temperature fault: The operating temperature in an external power supply has exceeded the normal operating range.*
- *50V fault: The external power supply reported a fault condition. Contact your ProCurve support representative.*
- *12V fault: The external power supply reported a fault condition. Contact your ProCurve support representative.*

`Slot <slot-id> POE usage has exceeded threshold of <1-99> %`

Indicates that POE usage in the indicated slot has exceeded the configured threshold for the module, as specified by the last execution of the **power threshold** *or* **power slot** ***<slot-id>*** **threshold** *command. (Note that the switch also generates an SNMP trap for this event.)*

`Port <port-id> PD Denied power due to insufficient power allocation.`

There is insufficient power available to power the PD on the indicated port and the port does not have sufficient PoE priority to take power from another active PoE port.

`Port <port-id> PD Invalid Signature indication.`

The switch has detected a non-802.3af-compliant device on the indicated port. This message appears for all non-802.3af devices connected to the port, such as other switches, PC-NICs, etc.

`Port <port-id> PD MPS Absent indication.`

The switch no longer detects a device on <port-id>. The device may have been disconnected, powered down, or stopped functioning.

`Port <port-id> PD Other Fault indication.`

There is a problem with the PD connected to the port.

`Port <port-id> PD Over Current indication.`

The PD connected to <port-id> has requested more than 15.4 watts of power. This may indicate a short-circuit or other problem in the PD.

Access Controller xl Module for the Series 5300xl Switches

Contents

Introduction 12-2
General Operation 12-2
Related Publications 12-2
Terminology 12-3
Access Controller xl Module Overview 12-4
Module Operation 12-4
Using 5300xl Features with the Access Controller xl Module . . . 12-6
Routing Infrastructure Support 12-9
Using 5300xl Switch Network Address Translation with the ACM 12-10
The Role of VLANs 12-11
Client VLANs 12-11
Static VLAN Features Supported on Client VLANs 12-12
General Operating Rules 12-13
Configuring the ACM on the Network 12-13
Configuring the Access Controller xl Module 12-15
Configuring Downlink Client Ports 12-15
Changing the VLAN-Base 12-17
Configuring Client VLANs 12-18
Configuring Uplink Network Ports 12-18
Configuring the Uplink VLAN 12-18
ACM Configuration Commands Summary and Syntax 12-19
Configuration Context Command Syntax 12-19
Access Controller Context Command Syntax 12-21
Displaying Access Controller xl Status from the 5300xl CLI . . . 12-23
ACM Display Commands Summary and Syntax 12-23

Configuration Context Command Syntax 12-24
Access Controller Context Command Syntax 12-25

Managing the ACM 12-26
Using the ACM's Extended CLI 12-26
Downloading New Software to the Module 12-29
Resetting the Module to Factory Defaults 12-29

Operating Notes 12-30

BIOS POST Event Log Messages 12-31

Introduction

The ProCurve Access Controller xl Module (ACM) enables secure, mobile user access to appropriate network services on any ProCurve Series 5300xl switch. This modular addition to the 5300xl switch offers a unique approach to integrating identity-based user access control, wireless data privacy and secure roaming with the flexibility of a full-featured intelligent edge switch. Centrally configured and managed access policies provide identity-based access control to wired and wireless users.

Note

The 5300xl switch software must be updated to version E.09.21 or later. The Access Control Server 740wl or the Integrated Access Manager 760wl must use software version 4.1.3.93 or later.

General Operation

The Access Controller xl Module (J8162A) uses ports on a 5300xl switch to pass wired and wireless traffic to and from the network using authentication and rights administration policies from an Access Control Server 740wl or an Integrated Access Manager 760wl. Up to two ACMs may be used in a single 5300xl switch. Once the ACM is installed in the switch, connected to the Access Control Server (740wl or 760wl), and configured for operation, it is managed from the Administrative Console of the Secure Access 740wl or 760wl products.

Related Publications

This chapter introduces Access Controller xl Module operation, configuration, and monitoring. The following two manuals provide further information:

- For information on installing the ACM, refer to the *ProCurve xl Modules Installation Guide* provided with the module.
- To help you manage and configure the ACM in your network, refer to the *ProCurve Secure Access 700wl Series Management and Configuration Guide*, which is available from either of the following sources:
  - The Documentation CD-ROM shipped with your module

- The ProCurve Networking Web site at **www.procurve.com**. (Click on **Technical support**, then **Product manuals (all)**.)

Terminology

Term	Use in this Manual
Access Control Server	A centralized resource on the network that provides services, such as authentication management, mobility management (roaming support), policy management, and system monitoring and reporting, to the connected Access Controllers. The Access Control Server is deployed as a dedicated control function and does not sit in the user data path. The Secure Access 700wl Series has two products that provide this capability: the ProCurve Access Control Server 740wl and the Integrated Access Manager 760wl.
Client	A device looking to access the network.
Client VLAN	A special VLAN created to handle downlink client port traffic for the ACM. Includes the downlink client port (with untagged VLAN membership) and the downlink port (<*slot-id*>DP) (with tagged VLAN membership).
Downlink Client Ports	Series 5300xl switch ports assigned as an untagged member to a client VLAN to supply client connectivity.
Downlink Port	The internal port that carries client traffic to and from the ACM. This port is identified by the slot ID where the module is installed, combined with 'DP'.
Integrated Access Manager 760wl	Combines the functionality of the ProCurve Access Controller 720wl and the ProCurve Access Control Server 740wl in a single device.
Uplink Port	The internal port that carries ACM traffic to and from the network. Must be an untagged member of a non-client VLAN. This port is identified by the slot ID where the module is installed, combined with 'UP.' For example, CUP is the uplink port for an ACM installed in slot C of a 5300xl switch.
Uplink Network Ports	Any 5300xl port that is a member of the uplink VLAN.
Uplink VLAN	The VLAN containing the uplink port as an untagged member. By default, this is the **DEFAULT_VLAN** on the 5300xl switch.

Access Controller xl Module Overview

The Access Controller xl Module adds new wireless security and access control capabilities to the 5300xl switch. The module supplies identity-based user access control to specific network services, wireless data privacy with VPN services, and application persistence across subnet boundaries at the edge of the network, where users connect. Centrally managed from the ProCurve Secure Access Control Server 740wl or Integrated Access Manager 760wl, the Access Controller xl Module provides hassle-free access while maintaining a high level of security.

Module Operation

Figure 12-12-1 below presents the module's key components. Each component is then discussed.

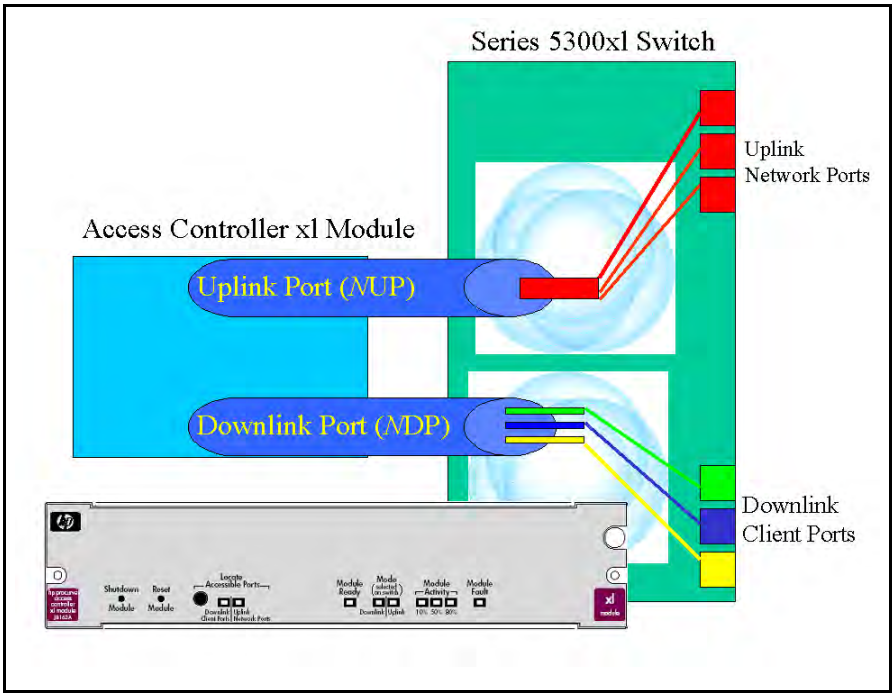

Figure 12-1. The Access Controller xl Module Conceptual View

The Access Controller xl Module has no external ports, as shown in Figure 12-12-1. The module uses ports on the 5300xl switch through two internal ports, the uplink port and the downlink port. Clients, typically connecting through an access point, connect to 5300xl ports defined as downlink client ports. The internal uplink port passes network traffic through other 5300xl ports, which are external uplink network ports. VLANs are used to direct traffic to and from the ACM.

For an explanation of the module's features and LEDs, see the *ProCurve xl Modules Installation Guide*.

Note

Uplink and downlink port names depend on the switch slot where the module is installed. When the module is in switch slot A, '*N*' is 'A' in Figure 12-12-1. The uplink port for the module is AUP; the downlink port is ADP.

The following steps are required to add an ACM to your network:

1. Install an Access Control Server 740wl or Integrated Access Manager 760wl in the network, or identify an existing 740wl or 760wl to be used with the ACM.
2. Having identified the Access Control Server 740wl or Integrated Access Manager 760wl to be used with the ACM, note its IP address. To operate, the ACM must establish secure communications with the Access Control Server or Integrated Access Manager.

   The shared secret configured on the 740wl/760wl's is also needed. If you are already using a 760wl, you may not have configured a shared secret. See "Editing the Access Control Server Configuration" in the *ProCurve Secure Access 700wl Series Management and Configuration Guide*, available on the Documentation CD-ROM shipped with your module or from the ProCurve Networking Web site at **www.procurve.com** (Click on **Technical support**, then **Product manuals (all)**).
3. Install the ACM in a slot on the 5300xl switch. Once the Module Ready LED is on, the ACM requires an IP address. By default, the ACM uses DHCP. The IP address also can be set manually. The uplink port must be an untagged member of a VLAN that can communicate with the 740wl or 760wl. The ACM establishes communication with the 740wl/760wl, using the IP address and the shared secret from step 2 above. See the *ProCurve xl Modules Installation Guide* for details.

4. Configure downlink client ports, client VLANs, uplink network ports, and the uplink VLAN on the 5300xl switch. Configure access and user/group policy rights on the 740wl/760wl to support and manage clients and client traffic through the ACM.
5. Manage and monitor the ACM using the Administrative Console on a 740wl or 760wl.

There are specific installation and operational requirements for this device as a module in a Series 5300xl switch. The following sections describe how the module operates and how it is configured for use.

Using 5300xl Features with the Access Controller xl Module

As the ACM uses special ports and VLANs to provide access security to wireless devices, not all of the features of the 5300xl switch are applicable. For example, features that provide an alternative means of authentication are not supported on ACM downlink client ports.

Some 5300xl configurations are not allowed by the Command Line Interface (CLI). When a CLI command fails, a message is displayed explaining why. Warning messages are issued when an operation could potentially cause problems managing traffic through the ACM. For example, if a downlink client port is assigned to a non-client VLAN, traffic could enter the network without first being authenticated and assigned specific access rights by the ACM. In this case, a warning message is issued stating that the port is a member of a client VLAN. In some cases Log messages are also created when an operation is done, noting the potential conflict with ACM operation.

Note

5300xl switch ports that are not used by the Access Controller xl Module (that is, they are not downlink client ports, or members of client VLANs) continue to operate as regular 5300xl ports. Their operation is not affected.

The table below presents the 5300xl switch features that are not supported for use with an ACM module.

Feature	Uplink Port	Downlink Port	Downlink Client Ports	Client VLANs	Explanation
802.1X	x	x	x		Not allowed.
ACL				x	Has no effect if assigned. Warning issued
Configuring IP Addresses				x	Not allowed.
DHCP/DHCP Relay				x	Not allowed.
IP Helper Address				x	Not allowed.
Flow Control					Not supported across an ACM.
GVRP	x	x	x	x	GVRP cannot be enabled on an uplink, downlink, or downlink client port. A port in a GVRP VLAN cannot be added to a client VLAN. If GVRP is enabled on a port when it is added to a client VLAN, it is disabled.
IGMP		x	x	x	IGMP cannot be enabled on client VLANs.As a result, it cannot be enabled on downlink client ports.
Interface Monitoring (Port Mirroring)	x	x	x		Cannot be used as a monitoring port.
Interface Provisioning:					
Speed	x	x			Fixed at 1000Mbps.
Duplex	x	x			Fixed at Full-Duplex.
Flow-Control	x	x			Not allowed.
Auto-MDIX mode	x	x			Not allowed.

'x' indicates that the feature is not supported.

Feature	Uplink Port	Downlink Port	Downlink Client Ports	Client VLANs	Explanation
IP Routing/				x	No routing is done.
Multicast Routing				x	Not allowed.
IP Stacking					Not supported across an ACM.
IRDP				x	Not allowed.
Link Test	x	x			Test packets not supported across an ACM.
LLDP	x	x			Set to off.
MAC Auth	x	x	x		Not allowed.
Meshing	x	x	x		Not allowed
				x	Mesh ports cannot be a member of a client VLAN.
MSTP (802.1s)					An MSTP region may not span across an ACM.
OSPF				x	Not allowed.
PIM				x	Not allowed.
RIP				x	Not allowed.
Static VLANs					See table 12-9-1 below.
Trunking[a]**:**					
LACP	x	x	x	x	Not allowed.
Virus Throttling		x	x	x	Not supported.
Web Auth	x	x	x		Not allowed.
XRRP				x	Not allowed.

'x' indicates that the feature is not supported.

a. A 5300xl switch trunk group that is configured using the **trunk** option, can be added to a **client VLAN**.

Routing Infrastructure Support

The ACM uses IP to communicate with Access Control Server 740wls, Integrated Access Managers 760wls and Access Controller 720wls. The default gateway must be set up correctly if there is a router in the communications path. Figure 12-12-2 shows an ACM communicating with its 740wl/760wl through a router.

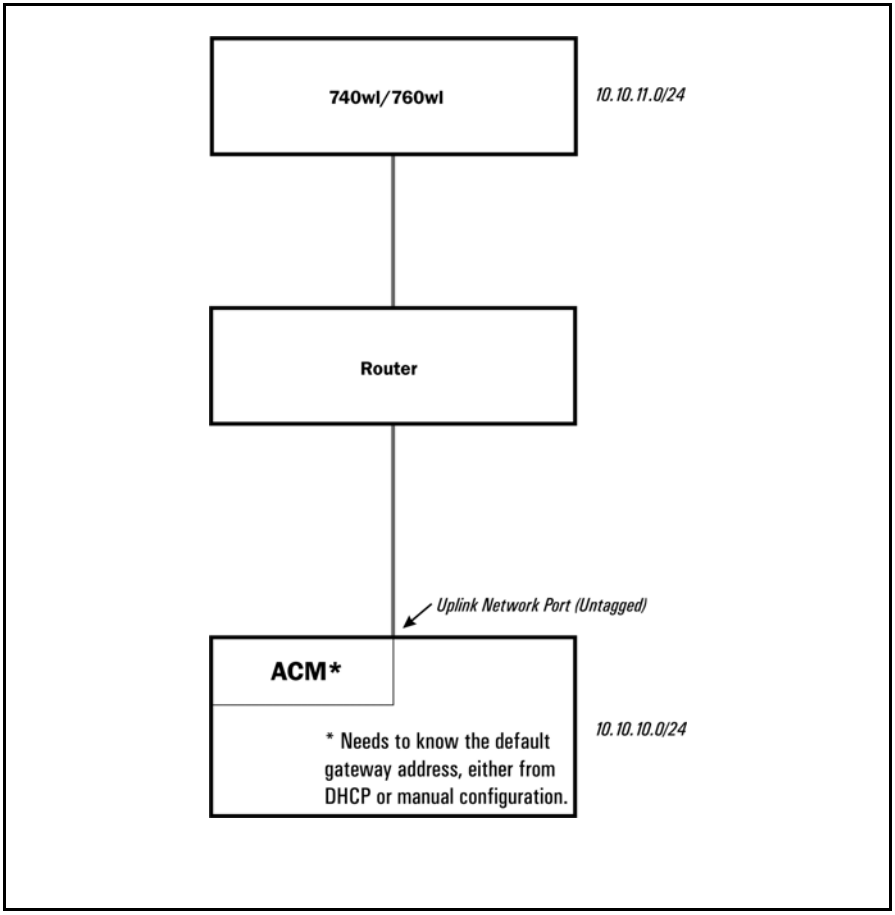

Figure 12-2. Accessing a 740wl or 760wl Through a Router

The ACM does not support any routing infrastructure attached to a downlink client port. Figure 12-12-12-3 below shows how an ACM can be used to communicate with a lower-level, non-routed network structure through a downlink client port.

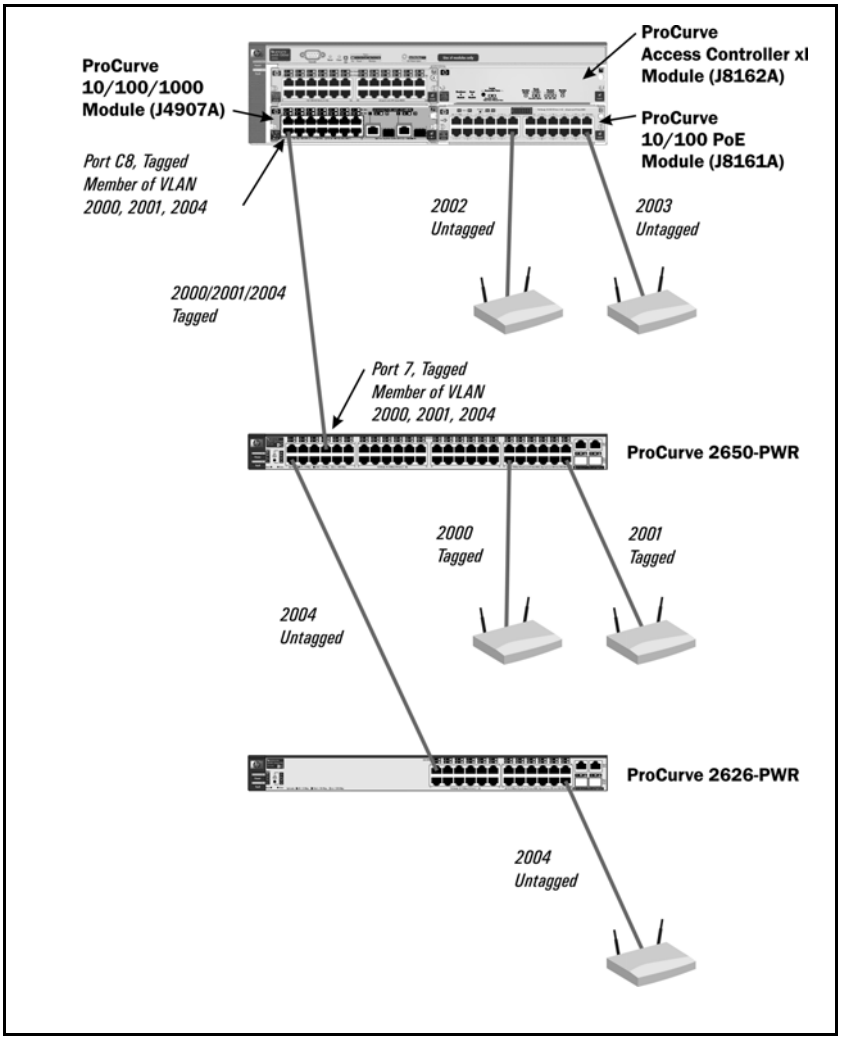

Figure 12-3. A Downlink Client Port with a Non-Routed Network Structure

Using 5300xl Switch Network Address Translation with the ACM

The Secure Access 700wl series products and the ACM provide network address translation for client traffic. The 5300xl switch's network address translation feature is not recommended for use with the ACM.

The Role of VLANs

VLANs are used by the Access Controller xl Module to manage client traffic through the switch. Downlink client ports, connecting to access points, either directly or through an intermediate network, are assigned as untagged members to a unique VLAN that also includes the downlink port as a tagged member. Traffic from the downlink client port, passing inbound through the downlink port on its way to the Access Controller xl Module, is normally tagged with the downlink client port's VLAN ID (VID), except when traffic is being bridged (see "Operating Notes" on page 12-31). The correct authentication policies and access policies are applied to this inbound client traffic by the Access Controller xl Module, based, in part, on the VLAN tag the traffic carries.

In a similar fashion, ACM traffic outbound to the network uses a VLAN to connect to the correct switch port. The uplink network port is an untagged member of the uplink VLAN, which by default is the 5300xl **DEFAULT_VLAN**. All switch ports that belong to the uplink VLAN are uplink network ports. The uplink VLAN may be changed by creating a new VLAN and assigning the uplink port to it as an untagged member. Any ports that belong to the new VLAN are uplink network ports, carrying ACM traffic to and from the network.

Client VLANs

Client VLANs are special VLANs used by the module for client traffic. They have the following characteristics:

- Up to 24 client VLANs, depending on your configuration, may be used on a 5300xl switch. If two Access Controller xl Modules are installed in a 5300xl switch, the total number of VLANs used by the two modules may not exceed 24.
- Uplink network ports may not be members of a client VLAN.

When a port is added to a client VLAN the following changes are made to the port:

- Information used for ARP and MAC address processing is flushed.
- If GVRP is enabled, it is disabled and a message is displayed.
- If LACP passive is configured, it is disabled and a message is displayed.

Downlink client ports must be members of some other VLAN before they can be removed from a client VLAN. If you use the **no access-controller <*slot-id*> client-ports [e] <*port-list*>** command to remove an untagged downlink client port with no other VLAN memberships from a client VLAN, the port is automatically placed in the DEFAULT-VLAN as an untagged member. If you attempt to remove a tagged downlink client port that belongs to no other VLAN, the removal fails. Add the port to another VLAN, then delete it from the client VLAN.

Client VLANs can be configured without specifying any switch ports using the **access-controller <*slot-id*> client-ports vlan <*vlan-list*>** command from the configuration context. The VLANs are created with only the downlink port, **<*slot-id*>DP**, as a tagged member. Later you can use VLAN commands from the 5300xl CLI to add switch ports to this VLAN as downlink client ports.

Static VLAN Features Supported on Client VLANs

Client VLANs are special and they don't support all of the features of a regular 5300xl static VLAN. Table 12-9-1 below outlines the feature limitations of client VLANs.

Table 9-1. 5300xl Static VLAN Features on Client VLANs

5300xl Static VLAN Feature	Client VLAN Support
ACLs	Do not work. A warning issued.
IGMP	Not allowed.
IP Address	Not allowed.
IP Helper Address	Not allowed.
IRDP	Not allowed.
Management VLAN	A client VLAN may not be used.
Multicast routing	Not allowed.
OSPF	Not allowed.
PIM	Not allowed.
Primary VLAN	A client VLAN may not be used.
Protocol VLAN	A client VLAN may not be used.
RIP	Not allowed.
XRRP	Not allowed.

General Operating Rules

- Uplink and downlink ports cannot be members of the same VLAN.
- Switch 5300xl features used to manage ports that are connected to bridges don't apply, as the ACM is not a bridge.
- A client VLAN containing the downlink port, **<*slot-id*>DP**, is automatically created when the ACM is installed in a 5300xl switch. The VID for this VLAN is the **vlan-base** (default: 2000). You cannot remove a client VLAN if it is the only remaining VLAN with the downlink port as a member.
- Client VLANs may not be configured as the Management or Primary VLAN on the 5300xl switch.
- Multiple subnets on a downlink client port are not supported.
- Shut down the ACM
  - before resetting or reloading the 5300xl chassis
  - before turning off the 5300xl chassis.
  - before removing the module from the 5300xl chassis.

  See the **shutdown** command in 12-"ACM Configuration Commands Summary and Syntax" on page 12-20.

Configuring the ACM on the Network

By default, the ACM uses DHCP to get an IP address. The uplink port of the ACM must be an untagged member of a VLAN that can communicate with the 740wl/760wl. If that communication is routed, the **Default gateway:** needs to be present in the IP address configuration. When the IP address is assigned manually be sure to configure the **Default gateway:** if it is needed. (See "Using the ACM's Extended CLI" on page 12-27.)

Use the following commands to configure an IP address manually.

Note

'ProCurve' is used as a generic prompt for all 5300xl switches. The term 'id' is used below for 'slot-id' to shorten the command prompt.

ProCurve (config)# access-controller *<slot-id>*

where ***<slot-id>*** is the slot in the 5300xl where the ACM is installed.

ProCurve (access-controller-id)# ip address <*<ip-addr>***/***<1-32>* **|***<ip-addr> <mask>>*

where ***<ip-addr>/<1...32>*** is the selected address in CIDR notation (/mask bit number), for example 10.1.2.3/24.
<ip-addr> <mask> provides the selected address and the mask.

If necessary, use the following command to set or change the default gateway:

ProCurve (access-controller-id)# ip default-gateway *<ip-addr>*

where ***<ip-addr>*** is the numeric IP address of the default gateway, for example 10.1.2.3.

Use the IP address of the 740wl/760wl and its shared secret to establish communications with the ACM.

ProCurve (access-controller-id)# access-control-server ip *<ip-addr>* **secret** *<secret> <secret>*

where ***<ip-addr>*** is the address of the 740wl/760wl
<secret> is the shared secret configured on the 740wl/760wl.

In the following example, an ACM establishes communications with an access control server with IP address 13.13.13.8. The access control server has a shared secret of 7734Oh. The **show status** command is used to confirm that communications has been established, indicated by a time value displayed (`2 secs`) in the `Connected:` field.

```
ProCurve Switch 5308xl (access-controller-B)#
access-control-server ip 13.13.
13.8 secret 77340h 77340h

  Shared secret changed.


ProCurve Switch 5308xl (access-controller-B)# show status
  Uptime:       23 hrs, 12 mins
  Access Controller Function
    Access Control Server:  13.13.13.8
    Connected:       2 secs
    Active Clients:  None

ProCurve Switch 5308xl (access-controller-B)#
```

Figure 12-4. Example of ACM Establishing Communication

Configuring the Access Controller xl Module

Once the module has an IP address and is communicating with its Access Control Server or Integrated Access Manager, configure downlink client ports, client VLANs, uplink network ports, and the uplink VLANs on the 5300xl switch.

Configuring Downlink Client Ports

Each downlink client port is automatically assigned to a unique client VLAN. The VID of the first client VLAN configured is specified by the **vlan-base** (default: 2000). Additional client VLANs use the next available sequential VID (2001, 2002, 2003, ...). If two Access Controller xl Modules are installed in the 5300xl switch, the **vlan-base** is the VID of the first client VLAN configured by either ACM. The next client VLAN configured on either ACM uses the next available sequential VID. Switch ports become untagged members of the client VLAN. The downlink port also becomes a tagged member of the client VLAN.

From the CLI command prompt at the global configuration level, enter

ProCurve (config) #access-controller <slot-id> client-ports <port list>

where

<slot-id> is the slot letter where the module is installed.

<port list> is the switch port(s) to be used as downlink client ports.

For example:

ProCurve (config)# access-controller b client-ports a2,a6

assigns two downlink client ports and two new client VLANs (see Figure 12-12-5). BDP, the downlink port for the module in slot B, is a tagged member of both client VLANs.

```
ProCurve Switch 5308xl(config)# access-controller b client-ports a2,a6
ProCurve Switch 5308xl(config)# access-controller b
ProCurve Switch 5308xl(access-controller-B)# show vlans
Downlink:
VLAN ID     VLAN Name     Ports
  2000  VLAN2000        A2,BDP
  2001  VLAN2001        A6,BDP

Uplink:
VLAN ID     VLAN Name     Ports
     1  DEFAULT_VLAN     A1,A3-A5,A7-A24,BUP

ProCurve Switch 5308xl(config)# show vlans 2000

 Status and Counters - VLAN Information - Ports - VLAN 2000

  802.1Q VLAN ID : 2000
  Name : VLAN2000
  Status : Port-based
  Voice : No

  Port Information Mode     Unknown VLAN Status
  ---------------- -------- ------------ ----------
  A2               Untagged Disable      Down
  BDP                Tagged  Disable      Up
```

Figure 12-5. Configuring A Downlink Client Port

Notes on Creating Downlink Client Ports

Depending on how many VLANs are already configured in the 5300xl switch, the following messages may occur:

- `Maximum Number of VLANs (X) has already been reached`
  Increase the maximum number of VLANs allowed on the switch.
- Command will take effect after saving configuration and reboot.
  The switch requires a reboot to incorporate the new client VLANs into the system. If downlink client ports are added over a period of time, a reboot may be required after each addition to make the client VLAN available.
- `Maximum number of client VLANs have been configured. Operation failed.`
  The maximum number of client VLANs for this configuration has been reached. An existing client VLAN must be removed before the requested VLAN can be added.

Changing the VLAN-Base

When the ACM is installed in the 5300xl switch, a VLAN is created for the internal downlink port (**<*slot-id*>DP**). By default, this client VLAN is VLAN ID 2000, the **vlan-base**. You may change this using the following command.

ProCurve (Config)# access-controller vlan-base *<2-4094>*

where ***<2-4094>*** is the starting VLAN ID (VID) used when a client VLAN is configured.

The **vlan-base** is used by the **<As-Is>[no] access-controller <slot-id> client-ports [ethernet] < port-list >** command when it configures client VLANs for the specified switch ports. The very first port specified for use as a downlink client port becomes an untagged member of the **vlan-base** VID. Subsequent downlink client ports are assigned as untagged members of the next available sequential VID, beginning at the **vlan-base**.

Configuring Client VLANs

You may configure a client VLAN with a specific VID, containing just the downlink port as a tagged member. Later, you can add an untagged 5300xl port as a downlink client port to carry client traffic.

Use the following command to configure a client VLAN:

ProCurve (Config)# access-controller *<slot-id>* client-ports vlan *<vlan-list>*

where ***<slot-id>*** is the slot letter where the module is installed.
<vlan-list> is the VID for the desired client VLAN.

Configuring Uplink Network Ports

Uplink network ports are any switch ports that are members of the uplink VLAN, that is, the VLAN where the ACM's internal uplink port is an untagged member. By default, the uplink port (***<slot-id>*UP**) is an untagged member of the DEFAULT-VLAN on the 5300xl switch. In this default configuration, all members of the DEFAULT-VLAN are uplink network ports.

Configuring the Uplink VLAN

To change the uplink VLAN, make the internal uplink port an *untagged* member of a new VLAN. Be sure that the new VLAN allows communication with the 740wl/760wl, or communications is lost.

ProCurve (Config)# vlan 25 untagged *<slot-id>***up**

where ***slot-id*** is the 5300xl switch slot where the ACM module is installed.

This command configures a new uplink VLAN, VID 25, for the ACM module installed in slot ***n***.

ACM Configuration Commands Summary and Syntax

Command	Page
Configuration Context	
access-controller <*slot-id*>	1220
[no] access-controller <*slot-id*> client-ports [e] < *port-list* >	1221
[no] access-controller <*slot-id*> client-ports vlan < *vlan-list* >	1222
access-controller <*slot-id*> reload	1222
access-controller <*slot-id*> shutdown	1222
access-controller vlan-base <*2-4094*>	1222
Access Controller Context	
access-control-server ip <*ip addr*> secret <*secret*> <*secret*>	1222
enable extended-commands	1223
exit	1223
[no] ip address <<*ip-addr*>|<*1-32*> | <*ip addr*> <*mask*>>	1223
[no] ip default-gateway <*ip-addr*>	1223
[no] page	1223
terminal <length <*2-1000*> | width <*61-1920*>>	1223

Configuration Context Command Syntax

Syntax: access-controller <*slot-id*>

Changes the CLI to the access controller context for the access controller in ***slot-id*** *(a - h). The* ***exit*** *command returns the CLI to the configuration context.*

Syntax: [no] access-controller <*slot-id*> client-ports [ethernet] < *port-list* >

Assigns switch ports (**port-list)** *to separate client VLANs for the access controller in* **slot-id** *(a - h). The ports are removed from all other VLANs. GVRP and LACP port provisioning are disabled.*

The client VLAN has the following port membership: the switch port, as an untagged member, and the ACM's downlink port (<slot-id>DP), as a tagged member.

The **vlan-base** *VID is configured when the ACM is installed in the switch. By default, this is VLAN 2000, whose only member is the downlink port. The very first time this command is used, the first switch port configured becomes a member of client VLAN* **vlan-base** *VID. For example, by default, the first time this command is used to assign a switch port to a client VLAN it becomes an untagged member of VLAN 2000. The next client VLAN configured takes the next available sequential VID, starting from the* **vlan-base**.

Use the **no** *form of the command to remove downlink client ports from ALL client VLANs associated with the module in* **<slot-id>**. *If the removed port has no other VLAN memberships it is automatically placed in the DEFAULT VLAN as an untagged member.*

If a client VLAN that contained the removed port was configured using an **access-controller <slot-id> client-ports [ethernet] < port-list >** *command and the ACM's downlink port is the only remaining member, the client VLAN is also removed.*

The **no** *form of this command does not remove a client VLAN configured using the* **access-controller <slot-id> client-ports vlan < vlan-list >** *command.*

Syntax: [no] access-controller <*slot-id*> client-ports vlan < *vlan-list* >

Configures client VLANs with the **VID**s *given, containing only the downlink port, (<slot-id>DP), as a tagged member.*

The **no** *form can be used to remove client VLANs that were configured using the* **access-controller <slot-id> client-ports vlan < vlan-list >** *command and contain only the downlink port.*

Syntax: access-controller <*slot-id*> reload]

Reboots the access controller in **slot-id** *with the current software version.*

Syntax: access-controller <*slot-id*> shutdown]

Halts the access controller in **slot-id.**

Syntax: access-controller vlan-base <2-4094>]

Sets the starting VLAN ID (VID) for client VLANs configured by the **access-controller <slot-id> client-ports < port-list >** *or the* **access-controller <slot-id> client-ports vlan < vlan-list>** *commands. Valid VIDs are 2 - 4094.*

Access Controller Context Command Syntax

Syntax: access-control-server ip <*ip addr*> secret <*secret*> <*secret*>]

Specifies the numeric ip address and shared secret for the access control server (740wl or 760wl) that provides services to the ACM.

The secret must match the shared secret configured on the 740wl/760wl. If the shared secret contains spaces, enclose the secret in double quotes (“ ”). The secret must be entered twice, identically.

Syntax: enable extended-commands

Changes the CLI to the access controller extended commands context. A limited set of commands from the 720wl CLI is provided here. See "Using the ACM's Extended CLI" for more information.

Syntax: exit

Leaves the access controller context and returns the CLI to the global configuration context.

Syntax: [no] ip address <<ip-addr>/<1-32> | <ip addr> <mask>>

Statically configures the ip address and subnet mask for the ACM. The ***no*** *form removes the fixed ip address and enables DHCP. (Default: DHCP)*

Syntax: [no] ip default-gateway <ip-addr>

Statically configures the numeric ip-addr of the default gateway. If DHCP is enabled, this command overrides the default gateway supplied by DHCP.

Syntax: [no] page

Turns on or off paging of the CLI command responses and CLI command stack replay (the up arrow function).

Syntax: terminal <length <*2-1000*> | width <*61-1920*>>

length <2-1000> *Sets the number of lines that are displayed between pauses when page is on. The initial setting is inherited from the previous context. This setting remains in effect when this context is exited.*

width <61-1920> *Sets the maximum line width to be used for CLI output or CLI input. Lines longer than the specified value wrap to the next line. The initial setting is inherited from the previous context. This setting remains in effect when this context is exited.*

Displaying Access Controller xl Status from the 5300xl CLI

Show commands are available in both the configuration context and the access controller context of the 5300xl CLI. These commands display ACM status and configuration.

ACM Display Commands Summary and Syntax

Command	Page
Configuration Context	
show access-controller <*slot-id*>	1225
[client-ports]	1225
[uplinks]	1225
show access-controller vlans	1225
show access-controller vlan-base	1225
Access Controller Context	
show ip	1226
show status	1226
show temperature	1226
show vlans	1225

Configuration Context Command Syntax

Syntax: show access-controller <*slot-id*>

Displays the following for the access controller in **slot-id** (a - h).

Versions	ACM version information for support staff.

Current status	`BIOS error`
	`booted`
	`booting`
	`booting timed out`
	`configuration fault`
	`failed to boot`
	`halted`
	`initializing`
	`not responding`
	`performing self-test`
	`rebooting`
	`running`
	`self-test failed`
	`shutting down`
	`shut down (safe for removal)`

Uplink MAC Address	ACM MAC address that appears in the 740wl/760wl Administrative Console as the **System ID.**

Syntax: show access-controller <*slot-id*> [client-ports]

Displays the downlink client ports for each client VLAN configured on the access controller in **slot-id** (a - h)

Syntax: show access-controller <*slot-id*> [uplinks]

Displays the uplink network ports configured on the access controller in **slot-id** (a - h)

Syntax: show access-controller vlans

Displays the **802.1Q VID** and **Name** of all configured client VLANs on the 5300xl switch. If two ACMs are installed, their client VLANs are presented in the list.

Syntax: show access-controller vlan-base

Displays the starting VLAN ID (VID) for client VLANs configured by the **access-controller <slot-id> client-ports < port-list >** or the **access-controller <slot-id> client-ports vlan < vlan-list>** commands.

Access Controller Context Command Syntax

Syntax: show ip

Displays the current IP configuration for the ACM, including:

Hostname:

Domain Name:

IP Address:

DHCP enabled:

Default gateway:

DHCP server:

DNS servers:

WINS servers:

Syntax: show status

Displays an overview of the ACM's status, including:

Uptime:

Access Control Server:

Connected:

Active Clients:

Syntax: show temperature

Displays the current temperature in degrees Celsius of the main processor of the ACM module.

Syntax: show vlans

Displays the **VLAN ID**, **VLAN Name**, and **Ports** for all VLANs associated with the ACM's uplink and downlink ports.

Managing the ACM

Once the module is installed and configured, most management tasks are done on the Access Control Server 740wl or Integrated Access Manager 760wl, using the Administrative Console. The Access Controller Module is managed in the same manner as a 720wl. For more information, see the *ProCurve Secure Access 700wl Series Management and Configuration Guide*, available on the CD shipped with the ACM, or from the ProCurve Networking Web site at **www.procurve.com**. (Click on **Technical support**, then Product manuals (all)).

Using the ACM's Extended CLI

A set of extended commands, available from the Access-Controller context, may be used to configure an ACM or display its status. These commands are a subset of the 720wl CLI commands. They are documented in the *ProCurve Secure Access 700wl Series Management and Configuration Guide*, available on the CD shipped with the ACM, or from the ProCurve Networking Web site at **www.procurve.com**. (Click on **Technical support**, then **Product manuals (all))**.

To access this context, type the following in the ACM context:

ProCurve(access-controller-id) # enable extended-commands

The command line prompt for the extended context is:

ProCurve(access-controller-id-ext)#

The available commands are listed below. Detailed descriptions are found in Appendix A, "Command Line Interface" in the *ProCurve Secure Access 700wl Series Management and Configuration Guide*.

Command
[no] ip address <<ip-addr>/<1-32> | <ip-addr> <mask>>
[no] ip default-gateway <ip-addr>
[no] page
access-control-server ip <ip-addr> secret <secret> <secret>
add bridging <atalk | wnmp> | <custom-bridging-string>
cancel upgrade

Command
Clear Commands
clear accesscontrolserver
clear dhcpserver
clear dns
clear domainname
clear gateway
clear hostname
clear logs
clear sharedsecret
clear upgradeproxy
delete bridging <atalk | wnmp> | <custom-bridging-string>
enable extended-commands
exit
factoryreset
get upgrade <url> <key> [mindowngrade | reboot | version]
help
logoff client <all | mac <mac-addr>>
reboot [downgrade | same | upgrade]
Set Commands
set accesscontrolserver <ip-addr>
set bridging <on | off>
set clientprobes <interval> <timeout>
set dhcp <on | off>
set dhcpserver <ip-addr>
set dns <primary-ip-addr> [<secondary-ip-addr>]
set domainname <domain>
set forwardipbroadcasts <all | none | on <port> | off <port> | <port>>
set gateway <ip-addr>
set hostname <host>
set ip <ip-addr> [<mask>] | <ip-addr>/<1-32>
set logopt addcat <all | error | info | none | session>
set logopt catlevel <error | info | none | session> <critical | major | minor | trivial | never>
set logopt cats <mask>
set logopt delcat <all | error | info | none | session>

Command
set logopt level <critical | major | minor | trivial | never>
set logopt nofuncs <on | off>
set logopt noids <on | off>
set logopt oflags <mask>
set logopt shorttrace <on | off>
set logopt string <logparam>
set sharedsecret <secret> <secret>
set upgradeproxy [<on | off>] [host <ip-addr> [<port>]] [user <user> [<password>]]
Show Commands
show accesscontrolserver
show bridging
show client mac <mac-addr> [rights]
show clientprobes
show clients [mac <mac-addr>] [sort <mac | ip | user | machine | port | sessions | idle>] [reverse]
show dhcpserver
show forwardipbroadcasts
show id
show ip
show logopt [level | cats | oflags | catlevel]
show logs [<critical | major | minor | trivial | never>] [cat <all | error | info>] [max <lines>] [for <count> <seconds | minutes | hours | days | weeks | months>] [search <quoted-text>] [reverse]
show natdhcp
show product
show serial
show sharedsecret
show status
show syslogserver
show temperature
show time
show upgrade
show upgradeproxy
show version
show vlans

Command
show vpn
terminal length <2..1000>
terminal width <61.1920>

Downloading New Software to the Module

New software is loaded through the Access Control Server or Integrated Access Manager using the Administrative Console.

Resetting the Module to Factory Defaults

The ACM may be returned to the factory default configuration using one of the following methods.

- Using the **factoryreset** command in the ACM's extended command context in the 5300xl CLI.
- Boot another, non-ACM module in the slot. This also removes the encoded ACM configuration information from the **show running** or **show config** command output.
- Use the **erase startup-config** command in the 5300xl CLI.
- Return the 5300xl chassis to its factory default configuration using the Reset and Clear keys on the front panel. (Refer to "Clear/Reset: Resetting to the Factory Default Configuration" in the Trouble-shooting appendix of the *Management and Configuration Guid*e for your switch.) This also resets the ACM.

Operating Notes

- Bridged protocols, such as Appletalk, are supported through a single downlink client port, whose client VLAN contains the downlink port as an *untagged* member. This must be configured manually on the switch. Each ACM may have one downlink client port configured to support bridged protocols.
- ProCurve recommends that a downlink client port be a member of only one client VLAN. Downlink client ports should not be members of any other VLANs, as this would allow access to unauthorized clients. If a downlink client port must be a member of another VLAN, configure filtering on the 740wl or 760wl to remove network traffic that might be sent to unauthorized ports.
- ProCurve recommends that you create a Management VLAN on your 5300xl switch. This secures the management of the 5300xl switch, allowing it to be managed only by members of the Management VLAN.
- Client-to-client communications is not possible through an ACM.
- ProCurve Manager does not support the ACM at this time. Support is expected later in 2005.

BIOS POST Event Log Messages

If a critical BIOS power on self test (POST) failure occurs when the ACM is inserted into a slot in a 5300xl chassis, the message below is posted to the Event Log. The 5300xl switch resets the ACM, up to two times (a total of three attempts to pass the POST). If the ACM fails three consecutive times, the module does not power on. The 5300xl switch can operate successfully if this occurs.

```
Slot <slot-id> Access Control Module Bios POST tests
failed, Post bitmap = 0xXXXX
```

The POST error bitmap values are explained below.

0x0001	IDE failure.
0x0002	System memory failure.
0x0004	Shadow memory failure.
0x0020	Protected memory failure.
0x0040	CMOS not ready error.
0x0100	Periodic timer failure.
0x0800	Device configuration error.
0x1000	Memory configuration error.
0x2000	Non-volatile RAM failure.
0x4000	External or CPU cache failure.
0x8000	Level2 cache failure.

13

Port Trunking

Contents

Overview 13-2

Port Trunk Features and Operation 13-4

Trunk Configuration Methods 13-5

Menu: Viewing and Configuring a Static Trunk Group 13-9

CLI: Viewing and Configuring Port Trunk Groups 13-11

Using the CLI To View Port Trunks 13-11

Using the CLI To Configure a Static or Dynamic Trunk Group . . . 13-14

Web: Viewing Existing Port Trunk Groups 13-17

Trunk Group Operation Using LACP 13-18

Default Port Operation 13-20

LACP Notes and Restrictions 13-21

Trunk Group Operation Using the "Trunk" Option 13-24

How the Switch Lists Trunk Data 13-25

Outbound Traffic Distribution Across Trunked Links 13-25

Overview

This chapter describes creating and modifying port trunk groups. This includes non-protocol trunks and LACP (802.3ad) trunks.

Port Status and Configuration Features

Feature	Default	Menu	CLI	Web
viewing port trunks	n/a	page 13-9	page 13-11	page 13-17
configuring a static trunk group	none	page 13-9	page 13-15	—
configuring a dynamic LACP trunk group	LACP passive	—	page 13-15	—

Port trunking allows you to assign up to eight physical links to one logical link (trunk) that functions as a single, higher-speed link providing dramatically increased bandwidth. This capability applies to connections between backbone devices as well as to connections in other network areas where traffic bottlenecks exist. A *trunk group* is a set of up to eight ports configured as members of the same port trunk. Note that the ports in a trunk group do not have to be consecutive. For example:

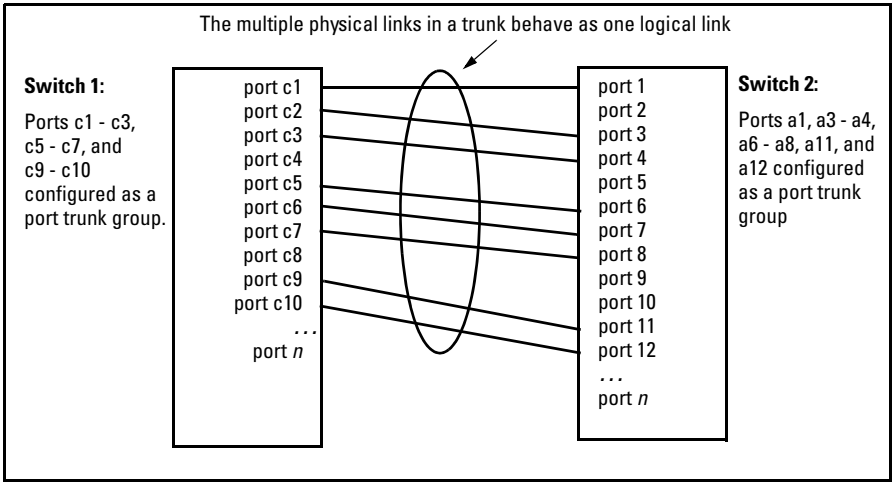

Figure 13-1. Conceptual Example of Port Trunking

With full-duplex operation in a eight-port trunk group, trunking enables the following bandwidth capabilities:

Port Connections and Configuration: All port trunk links must be point-to-point connections between a switch covered by this guide and another switch, router, server, or workstation configured for port trunking. No intervening, non-trunking devices are allowed. It is important to note that ports on both ends of a port trunk group must have the same mode (speed and duplex) and flow control settings.

Note

Link Connections. The switch does not support port trunking through an intermediate, non-trunking device such as a hub, or using more than one media type in a port trunk group. Similarly, for proper trunk operation, all links in the same trunk group must have the same speed, duplex, and flow control.

Port Security Restriction. Port security does not operate on a trunk group. If you configure port security on one or more ports that are later added to a trunk group, the switch resets the port security parameters for those ports to the factory-default configuration.

Caution

To avoid broadcast storms or loops in your network while configuring a trunk, first disable or disconnect all ports you want to add to or remove from the trunk. After you finish configuring the trunk, enable or re-connect the ports.

Port Trunk Features and Operation

The switches covered by this guide offer these options for port trunking:

- LACP: IEEE 802.3ad—page 13-18
- Trunk: Non-Protocol—page 13-24

The number of trunk groups supported on a given switch depends on the switch model and the number of ports physically available on the switch. The maximum theoretical bandwidths shown below are based on full-duplex operation.

Trunk Port Count	5300 1-Gig Links	3400/6400 Gig & 10-Gig	
		1-Gig Links	10-Gig Links
2	Up to 4 Gbs	Up to 4 Gbs	Up to 40 Gbs
3	6	6	60
4	8	8	80
5	8**	10	N/A*
6	8**	12	N/A*
7	8**	14	N/A*
8	8**	16	N/A*

*Although the 6400 can theoretically support an 8-port trunk, anything over 4 ports would not be practical because the trunk bandwidth capacity with 5 or more ports would exceed the bandwidth capacity of the remaining non-trunk ports. In any case, 80 Gbs is the theoretical maximum bandwidth for the 6400 switches.

** The maximum theoretical bandwidth for trunking on the 5300xl switches is 8 Gbs.

(Using the Link Aggregation Control Protocol—LACP—option, you can include standby trunked ports in addition to the maximum of eight actively trunking ports.)

LACP Note

LACP requires full-duplex (FDx) links of the same media type (10/100Base-T, 100FX, etc.) and the same speed, and enforces speed and duplex conformance across a trunk group. For most installations, ProCurve recommends that you leave the port Mode settings at **Auto** (the default). LACP also operates with **Auto-10**, **Auto-100**, and **Auto-1000** (if negotiation selects FDx), and **10FDx**, **100FDx**, and **1000FDx** settings. (The 10-gigabit ports available for some switch models allow only the **Auto** setting.)

Fault Tolerance: If a link in a port trunk fails, the switch redistributes traffic originally destined for that link to the remaining links in the trunk. The trunk remains operable as long as there is at least one link in operation. If a link is restored, that link is automatically included in the traffic distribution again. The LACP option also offers a standby link capability, which enables you to keep links in reserve for service if one or more of the original active links fails. See "Trunk Group Operation Using LACP" on page 13-18.)

Trunk Configuration Methods

Dynamic LACP Trunk: The switch automatically negotiates trunked links between LACP-configured ports on separate devices, and offers one dynamic trunk option: LACP. To configure the switch to initiate a dynamic LACP trunk with another device, use the **interface** command in the CLI to set the default LACP option to **Active** on the ports you want to use for the trunk. For example, the following command sets ports C1-C4 to LACP active:

```
ProCurve(config) int c1-c4 lacp active
```

Note that the preceding example works if the ports are not already operating in a trunk. To change the LACP option on ports already operating as a trunk, you must first remove them from the trunk. For example, if ports C1 - C4 were LACP-active and operating in a trunk with another device, you would do the following to change them to (the default) LACP-passive:

```
ProCurve(config)# no int c1-c4 lacp
```

Removes the ports from the trunk.

```
ProCurve(config)# int c1-c4 lacp passive
```

Configures LACP passive.

Static Trunk: The switch uses the links you configure with the Port/Trunk Settings screen in the menu interface or the **trunk** command in the CLI to create a static port trunk. The switch offers two types of static trunks: LACP and Trunk.

Table 13-1. Trunk Types Used in Static and Dynamic Trunk Groups

Trunking Method	LACP	Trunk
Dynamic	Yes	No
Static	Yes	Yes

Table 13-2. Trunk Configuration Protocols

Protocol	Trunking Options
LACP (802.3ad)	Provides dynamic and static LACP trunking options. • **Dynamic LACP** — Use the switch-negotiated dynamic LACP trunk when: – The port on the other end of the trunk link is configured for Active or Passive LACP. – You want fault-tolerance for high-availability applications. If you use an eight-link trunk you can also configure one or more additional links to operate as standby links that will activate only if another active link goes down. • **Static LACP** — Use the manually configured static LACP trunk when: – The port on the other end of the trunk link is configured for a static LACP trunk – You want to configure non-default spanning tree or IGMP parameters on an LACP trunk group. – *You want an LACP trunk group to operate in a VLAN other than the default VLAN and GVRP is disabled. (Refer to "VLANs and Dynamic LACP" on page 13-23.)* – You want to use a monitor port on the switch to monitor an LACP trunk. For more information, refer to "Trunk Group Operation Using LACP" on page 13-18.
Trunk (non-protocol)	Provides manually configured, static-only trunking to: • Most ProCurve switches and routing switches not running the 802.3ad LACP protocol. • Windows NT and HP-UX workstations and servers Use the Trunk option when: – The device to which you want to create a trunk link is using a non-802.3ad trunking protocol – You are unsure which type of trunk to use, or the device to which you want to create a trunk link is using an unknown trunking protocol. – You want to use a monitor port on the switch to monitor traffic on a trunk. Refer to "Trunk Group Operation Using the "Trunk" Option" on page 13-24.

Table 13-3. General Operating Rules for Port Trunks

Media: For proper trunk operation, all ports on both ends of a trunk group must have the same media type and mode (speed and duplex). (For the switches covered by this guide, ProCurve recommends leaving the port Mode setting at **Auto** or, in networks using Cat 3 cabling, **Auto-10**.)

Port Configuration: The default port configuration is **Auto**, which enables a port to sense speed and negotiate duplex with an Auto-Enabled port on another device. ProCurve recommends that you use the **Auto** setting for all ports you plan to use for trunking. Otherwise, you must manually ensure that the mode setting for each port in a trunk is compatible with the other ports in the trunk.

Recommended Port Mode Setting for LACP

```
ProCurve(config)# show interface config
 Port Settings
  Port Type       | Enabled Mode          Flow Ctrl MDI
  ---- --------- + ------- ------------ --------- ----
  C1   10/100TX   | Yes     Auto         Disable   Auto
  C2   10/100TX   | Yes     Auto         Disable   Auto
```

Figure 13-2. Recommended Port Mode Setting for LACP

All of the following operate on a per-port basis, regardless of trunk membership:

- Enable/Disable
- Flow control (Flow Ctrl)

LACP is a full-duplex protocol. Refer to "Trunk Group Operation Using LACP" on page 13-18.

Trunk Configuration: All ports in the same trunk group must be the same trunk type (LACP or Trunk). All LACP ports in the same trunk group must be either all static LACP or all dynamic LACP.

A trunk appears as a single port labeled **Dyn1** (for an LACP dynamic trunk) or **Trk1** (for a static trunk of type: LACP, Trunk) on various menu and CLI screens. For a listing of which screens show which trunk types, see "How the Switch Lists Trunk Data" on page 13-25.

For spanning-tree or VLAN operation, configuration for all ports in a trunk is done at the trunk level. (You cannot separately configure individual ports within a trunk for spanning-tree or VLAN operation.)

Traffic Distribution: All of the switch trunk protocols use the SA/DA (Source Address/Destination Address) method of distributing traffic across the trunked links. See "Outbound Traffic Distribution Across Trunked Links" on page 13-25.

Spanning Tree: 802.1D (STP) and 802.1w (RSTP) Spanning Tree operate as a global setting on the switch (with one instance of Spanning Tree per switch). 802.1s (MSTP) Spanning Tree operates on a per-instance basis (with multiple instances allowed per switch). For each SpanningTree instance, you can adjust Spanning Tree parameters on a per-port basis. A static trunk of any type appears in the Spanning Tree configuration display, and you can configure Spanning Tree parameters for a static trunk in the same way that you would configure Spanning Tree parameters on a non-trunked port. (Note that the switch lists the trunk by name—such as **Trk1**—and does not list the individual ports in the trunk.) For example, if ports C1 and C2 are configured as a static trunk named **Trk1**, they are listed in the Spanning Tree display as **Trk1** and do not appear as individual ports in the Spanning Tree displays.

In this example showing part of the **show spanning-tree** listing, ports C1 and C2 are members of TRK1 and do not appear as individual ports in the port configuration part of the listing.

```
Port    Type      Cost  Priority State      | Designated Bridge
------- --------- ----- -------- ---------- + -----------------
C3      100/1000T 5     128      Forwarding | 0020c1-b27ac0
C4      100/1000T 5     128      Forwarding | 0060b0-889e00
C5      100/1000T 5     128      Disabled   |
C6      100/1000T 5     128      Disabled   |
Trk1              1     64       Forwarding | 0001e7-a0ec00
```

Figure 13-3. Example of a Port Trunk in a Spanning Tree Listing

When Spanning Tree forwards on a trunk, all ports in the trunk will be forwarding. Conversely, when Spanning Tree blocks a trunk, all ports in the trunk are blocked.

Note: A dynamic LACP trunk operates only with the default Spanning Tree settings. Also, this type of trunk appears in the CLI **show spanning-tree** display, but not in the Spanning Tree Operation display of the Menu interface.

If you remove a port from a static trunk, the port retains the same Spanning Tree settings that were configured for the trunk.

IP Multicast Protocol (IGMP): A static trunk of any type appears in the IGMP configuration display, and you can configure IGMP for a static trunk in the same way that you would configure IGMP on a non-trunked port. (Note that the switch lists the trunk by name—such as **Trk1**—and does not list the individual ports in the trunk.) Also, creating a new trunk automatically places the trunk in IGMP Auto status if IGMP is enabled for the default VLAN. A dynamic LACP trunk operates only with the default IGMP settings and does not appear in the IGMP configuration display or **show ip igmp** listing.

VLANs: Creating a new trunk automatically places the trunk in the DEFAULT_VLAN, regardless of whether the ports in the trunk were in another VLAN. Similarly, removing a port from a trunk group automatically places the port in the default VLAN. You can configure a static trunk in the same way that you configure a port for membership in any VLAN.

Note: For a dynamic LACP trunk to operate in a VLAN other than the default VLAN (DEFAULT_VLAN), GVRP must be enabled. See "Trunk Group Operation Using LACP" on page 13-18.

Port Security: Trunk groups (and their individual ports) cannot be configured for port security, and the switch excludes trunked ports from the **show port-security** listing. If you configure non-default port security settings for a port, then subsequently try to place the port in a trunk, you will see the following message and the command will not be executed:

< *port-list* > Command cannot operate over a logical port.

Monitor Port:

Note: A trunk cannot be a monitor port. A monitor port can monitor a static trunk but cannot monitor a dynamic LACP trunk.

Menu: Viewing and Configuring a Static Trunk Group

Important

Configure port trunking *before* you connect the trunked links to another switch, routing switch, or server. Otherwise, a broadcast storm could occur. (If you need to connect the ports before configuring them for trunking, you can temporarily disable the ports until the trunk is configured. See "Using the CLI To Enable or Disable Ports and Configure Port Mode" on page 10-9.)

To View and/or Configure Static Port Trunking: This procedure uses the Port/Trunk Settings screen to configure a static port trunk group on the switch.

1. Follow the procedures in the Important note above.
2. From the Main Menu, Select:

   2. Switch Configuration ...

   2. Port/Trunk Settings
3. Press **[E]** (for **Edit**) and then use the arrow keys to access the port trunk parameters.

```
==========================- CONSOLE - MANAGER MODE -============================
                    Switch Configuration - Port/Trunk Settings

  Port    Type      Enabled      Mode       Flow Ctrl  Group    Type
  ----  --------  + -------  ------------  ---------  -----  --------
  C1    10/100TX  | Yes      Auto          Disable
  C2    10/100TX  | Yes      Auto          Disable
  C3    10/100TX  | Yes      Auto          Disable
  C4    10/100TX  | Yes      Auto          Disable
  C5    10/100TX  | Yes      Auto          Disable
  C6    10/100TX  | Yes      Auto          Disable

 Actions->   Cancel     Edit     Save     Help

Select Yes to enable the port, No to disable.
Use arrow keys to change field selection, <Space> to toggle field choices,
and <Enter> to go to Actions.
```

These two columns indicate static trunk status.

(For dynamic LACP trunk status, use the CLI show lacp command—page 13-13.)

Figure 13-4. Example of the Menu Screen for Configuring a Port Trunk Group

4. In the Group column, move the cursor to the port you want to configure.
5. Use the Space bar to choose a trunk group assignment (**Trk1**, **Trk2**, and so on) for the selected port.

- For proper trunk operation, all ports in a trunk must have the same media type and mode (such as 10/100TX set to 100FDx, or 100FX set to 100FDx). The flow control settings must also be the same for all ports in a given trunk. To verify these settings, see “Viewing Port Status and Configuring Port Parameters” on page 10-2.
- You can configure the trunk group with up to eight ports per trunk. If multiple VLANs are configured, all ports within a trunk will be assigned to the same VLAN or set of VLANs. (With the 802.1Q VLAN capability built into the switch, more than one VLAN can be assigned to a trunk. Refer to the chapter titled “Static Virtual LANs (VLANs)” in the *Advanced Traffic Management Guide* for your switch.)

  (To return a port to a non-trunk status, keep pressing the Space bar until a blank appears in the highlighted Group value for that port.)

```
==========================- CONSOLE - MANAGER MODE -===========================
                    Switch Configuration - Port/Trunk Settings

  Port    Type      Enabled      Mode       Flow Ctrl  Group    Type
  ----  -------- + -------  ------------  ---------  -----  --------
  C1    10/100TX | Yes      Auto          Disable
  C2    10/100TX | Yes      Auto          Disable          _ . .
  C3    10/100TX | Yes      Auto          Disable
  C4    10/100TX | Yes      Auto          Disable
  C5    10/100TX | Yes      Auto          Disable    Trk1   Trunk
  C6    10/100TX | Yes      Auto          Disable    Trk1   Trunk


 Actions->   Cancel     Edit     Save     Help

Select whether the port is part of a trunk or Mesh.
Use arrow keys to change field selection, <Space> to toggle field choices,
and <Enter> to go to Actions.
```

Figure 13-5. Example of the Configuration for a Two-Port Trunk Group

6. Move the cursor to the Type column for the selected port and use the Space bar to select the trunk type:
   - LACP
   - Trunk (the default type if you do not specify a type)

   All ports in the same trunk group on the same switch must have the same Type (**LACP** or **Trunk**.

7. When you are finished assigning ports to the trunk group, press **[Enter]**, then **[S]** (for **Save**) and return to the Main Menu. (It is not necessary to reboot the switch.)

   During the Save process, traffic on the ports configured for trunking will be delayed for several seconds. If the Spanning Tree Protocol is enabled, the delay may be up to 30 seconds.

8. Connect the trunked ports on the switch to the corresponding ports on the opposite device. If you previously disabled any of the trunked ports on the switch, enable them now. (See "Viewing Port Status and Configuring Port Parameters" on page 10-2.)

Check the Event Log ("Using the Event Log To Identify Problem Sources" on page C-27) to verify that the trunked ports are operating properly.

CLI: Viewing and Configuring Port Trunk Groups

Trunk Status and Configuration Commands

show trunks	below
show lacp	page 13-13
trunk	page 13-15
interface < *port-list* > lacp	page 13-15

Using the CLI To View Port Trunks

You can list the trunk type and group for all ports on the switch or for selected ports. You can also list LACP-only status information for LACP-configured ports.

Listing Static Trunk Type and Group for All Ports or for Selected Ports.

Syntax: show trunks [< *port-list* >]

Omitting the < port-list > parameter results in a static trunk data listing for all LAN ports in the switch. For example, in a switch where ports A4 and A5 belong to Trunk 1 and ports A7 and A8 belong to Trunk 2, you have the options shown in figures 13-6 and 13-7 for displaying port data for ports belonging to static trunks.

Using a port list specifies, for switch ports in a static trunk group, only the ports you want to view. In this case, the command specifies ports A5 through A7. However, because port A6 is not in a static trunk group, it does not appear in the resulting listing:

Port A5 appears with an example of a name that you can optionally assign using the Friendly Port Names feature. (See "Using Friendly (Optional) Port Names" on page 10-18.)

```
ProCurve> show trunks e a5-a7

 Load Balancing

  Port | Name                        Type       | Group Type
  ---- + ---------------------------- --------- + ----- -----
  A5   | Print-Server-Trunk          10/100TX   | Trk1  Trunk
  A7   | not assigned                10/100TX   | Trk2  Trunk
```

Port A6 does not appear in this listing because it is not assigned to a static trunk.

Figure 13-6. Example Listing Specific Ports Belonging to Static Trunks

The **show trunks < *port-list* >** command in the above example includes a port list, and thus shows trunk group information only for specific ports that have membership in a static trunk. In figure 13-7, the command does not include a port list, so the switch lists all ports having static trunk membership.

```
ProCurve> show trunks

 Load Balancing

  Port | Name                        Type       | Group Type
  ---- + ---------------------------- --------- + ----- -----
  A4   | Print-Server-Trunk          10/100TX   | Trk1  Trunk
  A5   | Print-Server-Trunk          10/100TX   | Trk1  Trunk
  A7   | not assigned                10/100TX   | Trk2  Trunk
  A8   | not assigned                10/100TX   | Trk2  Trunk
```

Figure 13-7. Example of a Show Trunk Listing Without Specifying Ports

Listing Static LACP and Dynamic LACP Trunk Data.

Syntax: show lacp

Lists data for only the LACP-configured ports..

In the following example, ports A1 and A2 have been previously configured for a static LACP trunk. (For more on "Active", see table 11-13-5 on page 13-21.)

```
ProCurve> show lacp

                              LACP

PORT    LACP       TRUNK      PORT       LACP       LACP
NUMB    ENABLED    GROUP      STATUS     PARTNER    STATUS
----    -------    -------    -------    -------    -------
A1      Active     Trk1       Up         Yes        Success
A2      Active     Trk1       Up         Yes        Success
A3      Active     A3         Down       No         Success
A4      Passive    A4         Down       No         Success
A5      Passive    A5         Down       No         Success
A6      Passive    A6         Down       No         Success
```

Figure 13-8. Example of a Show LACP Listing

(For a description of each of the above-listed data types, refer to table 13-5, "LACP Port Status Data" on page 13-21.)

Dynamic LACP Standby Links. Dynamic LACP trunking enables you to configure standby links for a trunk by including more than eight ports in a dynamic LACP trunk configuration. When eight ports (trunk links) are up, the remaining link(s) will be held in standby status. If a trunked link that is "Up" fails, it will be replaced by a standby link, which maintains your intended bandwidth for the trunk. (See also the "Standby" entry under "Port Status" in "Table 13-5. LACP Port Status Data" on page 13-21.) In the next example, ports A1 through A9 have been configured for the same LACP trunk. Notice that one of the links shows Standby status, while the remaining eight links are "Up".

```
ProCurve> show lacp
                                   LACP
  PORT    LACP       TRUNK      PORT       LACP       LACP
  NUMB    ENABLED    GROUP      STATUS     PARTNER    STATUS
  ----    -------    -------    -------    -------    -------
  A1      Active     Dyn1       Up         Yes        Success
  A2      Active     Dyn1       Up         Yes        Success
  A3      Active     Dyn1       Up         Yes        Success
  A4      Active     Dyn1       Up         Yes        Success
  A5      Active     Dyn1       Up         Yes        Success
  A6      Active     Dyn1       Up         Yes        Success
  A7      Active     Dyn1       Up         Yes        Success
  A8      Active     Dyn1       Up         Yes        Success
  A9      Active     Dyn1       Standby    Yes        Success
```

"Up" Links

Standby Link

Figure 13-9. Example of a Dynamic LACP Trunk with One Standby Link

Using the CLI To Configure a Static or Dynamic Trunk Group

Important

Configure port trunking *before* you connect the trunked links between switches. Otherwise, a broadcast storm could occur. (If you need to connect the ports before configuring them for trunking, you can temporarily disable the ports until the trunk is configured. See "Using the CLI To Enable or Disable Ports and Configure Port Mode" on page 10-9.)

The table on page 13-4 describes the maximum number of trunk groups you can configure on the switches covered in this guide. An individual trunk can have up to eight links, with additional standby links if you're using LACP. You can configure trunk group types as follows:

Trunk Type	Trunk Group Membership	
	Trk*X* (Static)	Dyn*X* (Dynamic)
LACP	Yes	Yes
Trunk	Yes	No

Note

Trunks configured as FEC (Fast Ethernet Channel) are not supported. To configure port trunk groups, use static or LACP trunks. For release notes describing the latest software updates, visit the ProCurve Networking web site at **www.procureve.com**. Click on **Technical support**, and then click on **Product manuals (all)**.

The following examples show how to create different types of trunk groups.

Configuring a Static Trunk or Static LACP Trunk Group.

Syntax: trunk < *port-list* > < trk1 ... trk36 > < trunk | lacp >

Configures the specified static trunk type.

This example uses ports C4 - C6 to create a non-protocol static trunk group with the group name of **Trk2**.

```
ProCurve(config)# trunk c4-c6 trk2 trunk
```

Removing Ports from a Static Trunk Group. This command removes one or more ports from an existing **Trk*x*** trunk group.

Caution

Removing a port from a trunk can create a loop and cause a broadcast storm. When you remove a port from a trunk where spanning tree is not in use, ProCurve recommends that you first disable the port or disconnect the link on that port.

Syntax: no trunk < *port-list* >

Removes the specified ports from an existing trunk group.

For example, to remove ports C4 and C5 from an existing trunk group.

```
ProCurve(config)# no trunk c4-c5
```

Enabling a Dynamic LACP Trunk Group. In the default port configuration, all ports on the switch are set to LACP **Passive**. However, to enable the switch to automatically form a trunk group that is dynamic on both ends of the link, the ports on one end of a set of links must be LACP **Active**. The ports on the other end can be either LACP **Active** or LACP **Passive**. The **active** command enables the switch to automatically establish a (dynamic) LACP trunk group when the device on the other end of the link is configured for LACP **Passive**.

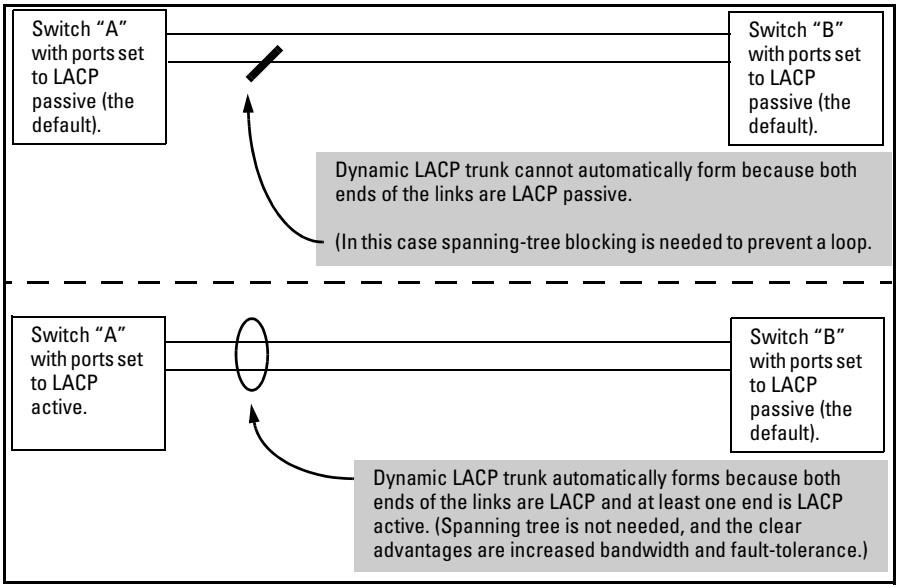

Figure 13-10. Example of Criteria for Automatically Forming a Dynamic LACP Trunk

Syntax: interface *< port-list >* lacp active

Configures < port-list > as LACP active. If the ports at the other end of the links on < port-list > are configured as LACP passive, then this command enables a dynamic LACP trunk group on < port-list >.

This example uses ports C4 and C5 to enable a dynamic LACP trunk group.

```
ProCurve(config)# interface c4-c5 lacp active
```

Removing Ports from an Dynamic LACP Trunk Group. To remove a port from dynamic LACP trunk operation, you must turn off LACP on the port. (On a port in an operating, dynamic LACP trunk, you cannot change between LACP **Active** and LACP **passive** without first removing LACP operation from the port.)

Caution

Unless spanning tree is running on your network, removing a port from a trunk can result in a loop. To help prevent a broadcast storm when you remove a port from a trunk where spanning tree is not in use, ProCurve recommends that you first disable the port or disconnect the link on that port.

Syntax:

Syntax: no interface < *port-list* > lacp

Removes < port-list > from any dynamic LACP trunk and returns the ports in < port-list > to passive LACP.

In this example, port C6 belongs to an operating, dynamic LACP trunk. To remove port C6 from the dynamic trunk and return it to passive LACP, you would do the following:

```
ProCurve(config)# no interface c6 lacp
ProCurve(config)# interface c6 lacp passive
```

Note that in the above example, if the port on the other end of the link is configured for active LACP or static LACP, the trunked link will be re-established almost immediately.

Web: Viewing Existing Port Trunk Groups

While the web browser interface does not enable you to configure a port trunk group, it does provide a view of an existing trunk group.

To view any port trunk groups:

Click on the **Status** tab.

Click on **[Port Status]**.

Trunk Group Operation Using LACP

The switch can automatically configure a dynamic LACP trunk group or you can manually configure a static LACP trunk group.

Note

LACP requires full-duplex (FDx) links of the same media type (10/100Base-T, 100FX, etc.) and the same speed, and enforces speed and duplex conformance across a trunk group. For most installations, ProCurve recommends that you leave the port Mode settings at **Auto** (the default). LACP also operates with **Auto-10**, **Auto-100**, and **Auto-1000** (if negotiation selects FDx), and **10FDx**, **100FDx**, and **1000FDx** settings.

LACP trunk status commands include:

Trunk Display Method	Static LACP Trunk	Dynamic LACP Trunk
CLI **show lacp** command	Included in listing.	Included in listing.
CLI **show trunk** command	Included in listing.	Not included.
Port/Trunk Settings screen in menu interface	Included in listing.	Not included

Thus, to display a listing of dynamic LACP trunk ports, you must use the **show lacp** command.

In most cases, trunks configured for LACP on the switches covered by this manual operate as described in table 13-4 on the next page.

Table 13-4. LACP Trunk Types

LACP Port Trunk Configuration	Operation
Dynamic LACP	This option automatically establishes an 802.3ad-compliant trunk group, with **LACP** for the port Type parameter and **Dyn*X*** for the port Group name, where ***X*** is an automatically assigned value from 1 to 36, depending on how many dynamic and static trunks are currently on the switch. (The switch allows a maximum of 36 trunk groups in any combination of static and dynamic trunks.) **Note:** Dynamic LACP trunks operate only in the default VLAN (unless GVRP is enabled and **Forbid** is used to prevent the trunked ports from joining the default VLAN). Thus, if an LACP dynamic port forms using ports that are not in the default VLAN, the trunk will automatically move to the default VLAN unless GVRP operation is configured to prevent this from occurring. In some cases, this can create a traffic loop in your network. For more on this topic, refer to "VLANs and Dynamic LACP" on page 13-23. Under the following conditions, the switch automatically establishes a dynamic LACP port trunk group and assigns a port Group name: • The ports on both ends of each link have compatible mode settings (speed and duplex). • The port on one end of each link must be configured for LACP Active and the port on the other end of the same link must be configured for either LACP Passive (the default) or LACP Active. For example: 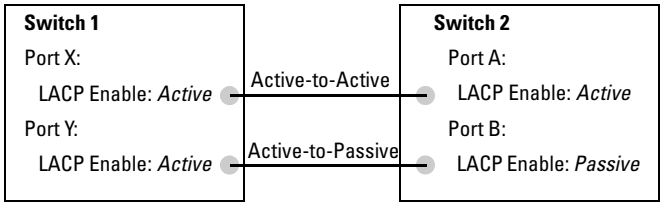 Either of the above link configurations allow a dynamic LACP trunk link. The following operations are supported: • Dynamic LACP <Active | Passive > to Static LACP • Dynamic LACP Active to Dynamic LACP Active NOT supported is: • Dynamic LACP <Active | Passive> to <Trunk> **Backup Links:** A maximum of eight operating links are allowed in the trunk, but, with dynamic LACP, you can configure one or more additional (backup) links that the switch automatically activates if a primary link fails. To configure a link as a standby for an existing eight-port dynamic LACP trunk, ensure that the ports in the standby link are configured as either active-to-active or active-to-passive between switches. **Displaying Dynamic LACP Trunk Data:** To list the configuration and status for a dynamic LACP trunk, use the CLI **show lacp** command. **Note:** The dynamic trunk is automatically created by the switch, and is not listed in the static trunk listings available in the menu interface or in the CLI **show trunk** listing.

LACP Port Trunk Configuration	Operation
Static LACP	Provides a manually configured, static LACP trunk to accommodate these conditions: • A static LACP trunk will work with a dynamic LACP trunk. The VLAN membership of a dynamic trunk will be VLAN 1; the static LACP trunk should also be a member of VLAN 1. (Static trunks can be configured to be a member of another VLAN.) • You want to configure non-default spanning tree or IGMP parameters on an LACP trunk group. • You want an LACP trunk group to operate in a VLAN other than the default VLAN and GVRP is disabled. (Refer to "VLANs and Dynamic LACP" on page 13-23.) • You want to use a monitor port on the switch to monitor an LACP trunk. The following operations are supported: • Dynamic LACP <Active | Passive > to Static LACP • Dynamic LACP Active to Dynamic LACP Active NOT supported is: • Dynamic LACP <Active | Passive> to <Trunk> (The table on page 13-4 lists the maximum number of trunk groups allowed on switches covered by this guide.) Displaying Static LACP Trunk Data: To list the configuration and status for a static LACP trunk, use the CLI **show lacp** command. To list a static LACP trunk with its assigned ports, use the CLI **show trunk** command or display the menu interface Port/Trunk Settings screen. Static LACP does not allow standby ports.

Default Port Operation

For the Series 4200vl switches, LACP is turned off by default. For the Series 5300xl, 3400lcl, and 6400cl switches, all ports are configured for passive LACP by default.

When LACP is turned on, if LACP is not configured as Active on at least one end of a link, then the port does not try to detect a trunk configuration and operates as a standard, untrunked port. Table 13-5 lists the elements of per-port LACP operation. To display this data for a switch, execute the following command in the CLI:

```
ProCurve> show lacp
```

Table 13-5. LACP Port Status Data

Status Name	Meaning
Port Numb	Shows the physical port number for each port configured for LACP operation (C1, C2, C3 .)..Unlisted port numbers indicate that the missing ports are assigned to a static Trunk group are not configured for any trunking.
LACP Enabled	**Active:** The port automatically sends LACP protocol packets. **Passive:** The port does not automatically send LACP protocol packets, and responds only if it receives LACP protocol packets from the opposite device. A link having either two active LACP ports or one active port and one passive port can perform dynamic LACP trunking. A link having two passive LACP ports will not perform LACP trunking because both ports are waiting for an LACP protocol packet from the opposite device. **Note:** For the Series 4200vl switches, LACP is turned off by default. For the 5300xl, 3400cl, and 6400cl switches, all ports are configured for passive LACP by default.
Trunk Group	**Trk*X***: This port has been manually configured into a static LACP trunk. **Trunk Group Same as Port Number:** The port is configured for LACP, but is not a member of a port trunk.
Port Status	**Up:** The port has an active LACP link and is not blocked or in Standby mode. **Down:** The port is enabled, but an LACP link is not established. This can indicate, for example, a port that is not connected to the network or a speed mismatch between a pair of linked ports. **Disabled:** The port cannot carry traffic. **Blocked:** LACP, spanning tree has blocked the port. (The port is not in LACP Standby mode.) This may be due to a (brief) trunk negotiation or a configuration error such as differing port speeds on the same link or trying to connect the switch to more trunks than it can support. (See the table on page 13-4.) **Standby:** The port is configured for dynamic LACP trunking to another device, but the maximum number of ports for the Dynamic trunk to that device has already been reached on either the switch or the other device. This port will remain in reserve, or "standby" unless LACP detects that another, active link in the trunk has become disabled, blocked, or down. In this case, LACP automatically assigns a Standby port, if available, to replace the failed port.
LACP Partner	**Yes:** LACP is enabled on both ends of the link. **No:** LACP is enabled on the switch, but either LACP is not enabled or the link has not been detected on the opposite device.
LACP Status	**Success:** LACP is enabled on the port, detects and synchronizes with a device on the other end of the link, and can move traffic across the link. **Failure:** LACP is enabled on a port and detects a device on the other end of the link, but is not able to synchronize with this device, and therefore not able to send LACP packets across the link. This can be caused, for example, by an intervening device on the link (such as a hub), a bad hardware connection, or if the LACP operation on the opposite device does not comply with the IEEE 802.3ad standard.

LACP Notes and Restrictions

802.1x (Port-Based Access Control) Configured on a Port. To maintain security, LACP is not allowed on ports configured for 802.1x authenticator operation. If you configure port security on a port on which LACP (active or passive) is configured, the switch removes the LACP configuration, displays a notice that LACP is disabled on the port(s), and enables 802.1x on that port.

```
ProCurve(config)# aaa port-access authenticator b1
LACP has been disabled on 802.1x port(s).
ProCurve(config)#
```

The switch will not allow you to configure LACP on a port on which port access (802.1x) is enabled. For example:

```
ProCurve(config)# int b1 lacp passive
Error configuring port < port-number >: LACP and 802.1x
cannot be run together.
ProCurve(config)#
```

To restore LACP to the port, you must first remove the port's 802.1x configuration and then re-enable LACP active or passive on the port.

Port Security Configured on a Port. To maintain security, LACP is not allowed on ports configured for port security. If you configure port security on a port on which LACP (active or passive) is configured, the switch removes the LACP configuration, displays a notice that LACP is disabled on the port(s), and enables port security on that port. For example:

```
ProCurve(config)# port-security a17 learn-mode static
address-limit 2
LACP has been disabled on secured port(s).
ProCurve(config)#
```

The switch will not allow you to configure LACP on a port on which port security is enabled. For example:

```
ProCurve(config)# int a17 lacp passive
Error configuring port A17: LACP and port security cannot
be run together.
ProCurve(config)#
```

To restore LACP to the port, you must remove port security and re-enable LACP active or passive.

Changing Trunking Methods. To convert a trunk from static to dynamic, you must first eliminate the static trunk.

Static LACP Trunks. Where a port is configured for LACP (Active or Passive), but does not belong to an existing trunk group, you can add that port to a static trunk. Doing so disables dynamic LACP on that port, which means you must manually configure both ends of the trunk.

Dynamic LACP Trunks. You can configure a port for LACP-active or LACP-passive, but on a dynamic LACP trunk you cannot configure the other options that you can on static trunks. If you want to manually configure a trunk, use the **trunk** command. (Refer to "Using the CLI To Configure a Static or Dynamic Trunk Group" on page 13-14.)

VLANs and Dynamic LACP. A dynamic LACP trunk operates only in the default VLAN (unless you have enabled GVRP on the switch and use **Forbid** to prevent the ports from joining the default VLAN).

- If you want to use LACP for a trunk on a non-default VLAN and GVRP is disabled, configure the trunk as a static trunk.
- If there are ports that you do not want on the default VLAN, ensure that they cannot become dynamic LACP trunk members. Otherwise a traffic loop can unexpectedly occur. For example:

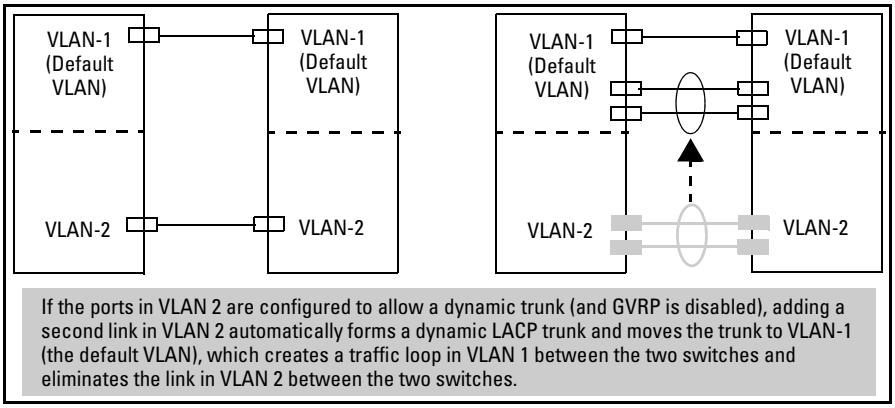

If the ports in VLAN 2 are configured to allow a dynamic trunk (and GVRP is disabled), adding a second link in VLAN 2 automatically forms a dynamic LACP trunk and moves the trunk to VLAN-1 (the default VLAN), which creates a traffic loop in VLAN 1 between the two switches and eliminates the link in VLAN 2 between the two switches.

Figure 13-11. A Dynamic LACP Trunk Forming in a VLAN Can Cause a Traffic Loop

Easy control methods include either disabling LACP on the selected ports or configuring them to operate in static LACP trunks.

Spanning Tree and IGMP. If Spanning Tree and/or IGMP is enabled in the switch, a dynamic LACP trunk operates only with the default settings for these features and does not appear in the port listings for these features.

Half-Duplex and/or Different Port Speeds Not Allowed in LACP Trunks. The ports on both sides of an LACP trunk must be configured for the same speed and for full-duplex (FDx). The 802.3ad LACP standard specifies a full-duplex (FDx) requirement for LACP trunking. (10-gigabit ports operate only at FDx.)

A port configured as LACP passive and not assigned to a port trunk can be configured to half-duplex (HDx). However, in any of the following cases, a port cannot be reconfigured to an HDx setting:

- If the port is a 10-gigabit port.
- If a port is set to LACP Active, you cannot configure it to HDx.
- If a port is already a member of a static or dynamic LACP trunk, you cannot configure it to HDx.
- If a port is already set to HDx, the switch does not allow you to configure it for a static or dynamic LACP trunk.

Dynamic/Static LACP Interoperation: A port configured for dynamic LACP can properly interoperate with a port configured for static (Trk*X*) LACP, but any ports configured as standby LACP links will be ignored.

Trunk Group Operation Using the "Trunk" Option

This method creates a trunk group that operates independently of specific trunking protocols and does not use a protocol exchange with the device on the other end of the trunk. With this choice, the switch simply uses the SA/DA method of distributing outbound traffic across the trunked ports without regard for how that traffic is handled by the device at the other end of the trunked links. Similarly, the switch handles incoming traffic from the trunked links as if it were from a trunked source.

When a trunk group is configured with the **trunk** option, the switch automatically sets the trunk to a priority of "4" for spanning-tree operation (even if spanning-tree is currently disabled. This appears in the running-config file as `spanning-tree Trkn priority 4`. Executing **write memory** after configuring the trunk places the same entry in the startup-config file.

Use the Trunk option to establish a trunk group between a 5300xl, 3400cl, or 6400cl switch and another device, where the other device's trunking operation fails to operate properly with LACP trunking configured on the 5300xl or LACP trunking configured on the 3400/6400cl switches or 4200vl switches.

How the Switch Lists Trunk Data

Static Trunk Group: Appears in the menu interface and the output from the CLI **show trunk** and **show interfaces** commands.

Dynamic LACP Trunk Group: Appears in the output from the CLI **show lacp** command.

Interface Option	Dynamic LACP Trunk Group	Static LACP Trunk Group	Static Non-Protocol (5300xl Switches Only)
Menu Interface	No	Yes	Yes
CLI **show trunk**	No	Yes	Yes
CLI **show interfaces**	No	Yes	Yes
CLI **show lacp**	Yes	Yes	No
CLI **show spanning-tree**	No	Yes	Yes
CLI **show igmp**	No	Yes	Yes
CLI **show config**	No	Yes	Yes

Outbound Traffic Distribution Across Trunked Links

The two trunk group options (LACP and Trunk) use source-destination address pairs (SA/DA) for distributing outbound traffic over trunked links.

SA/DA (source address/destination address) causes the switch to distribute outbound traffic to the links within the trunk group on the basis of source/destination address pairs. That is, the switch sends traffic from the same source address to the same destination address through the same trunked link, and sends traffic from the same source address to a different destination address through a different link, depending on the rotation of path assignments among the links in the trunk. Likewise, the switch distributes traffic for the same destination address but from different source addresses through different links. Because the amount of traffic coming from or going to various nodes in a network can vary widely, it is possible for one link in a trunk group to be fully utilized while others in the same trunk have unused bandwidth capacity even though the address assignments are evenly distributed across the links in a trunk. In actual networking environments, this is rarely a problem. However, if it becomes a problem, you can use the ProCurve

Manager Plus network management software to quickly and easily identify the sources of heavy traffic (top talkers) and make adjustments to improve performance.

Broadcasts, multicasts, and floods from different source addresses are distributed evenly across the links. As links are added or deleted, the switch redistributes traffic across the trunk group. For example, in figure 13-12 showing a three-port trunk, traffic could be assigned as shown in table 13-6.

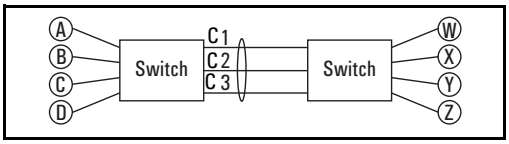

Figure 13-12. Example of Port-Trunked Network

Table 13-6. Example of Link Assignments in a Trunk Group (SA/DA Distribution)

Source:	Destination:	Link:
Node A	Node W	1
Node B	Node X	2
Node C	Node Y	3
Node D	Node Z	1
Node A	Node Y	2
Node B	Node W	3

14

Port Traffic Controls

Contents

Overview 14-3

All-Traffic Rate-Limiting for the 5300xl, 3400cl and 6400cl Switches 14-4

Introduction 14-4

Rate-Limiting Operation 14-5

Configuring Inbound Rate-Limiting 14-5

Displaying the Current Rate-Limit Configuration 14-6

Operating Notes for Rate-Limiting 14-7

ICMP Rate-Limiting 14-10

Terminology 14-10

Effect of ICMP Rate-Limiting 14-10

Operating Notes for ICMP Rate-Limiting 14-17

Guaranteed Minimum Bandwidth (GMB) on the Series 5300xl Switches 14-21

Introduction 14-21

Terminology 14-21

GMB Operation 14-21

Configuring Guaranteed Minimum Bandwidth for Outbound Traffic 14-23

Displaying the Current Guaranteed Minimum Bandwidth Configuration 14-25

GMB Operating Notes 14-26

Jumbo Packets on the Series 3400cl and Series 6400cl Switches 14-27

Terminology 14-27

Operating Rules 14-28

Configuring Jumbo Packet Operation 14-29

Overview 14-29

Viewing the Current Jumbo Configuration 14-29
Enabling or Disabling Jumbo Traffic on a VLAN 14-31
Operating Notes for Jumbo Traffic-Handling 14-32
Troubleshooting 14-34

Overview

Feature	Default	Menu	CLI	Web
Rate-Limiting	None	n/a	14-4	n/a
Guaranteed Minimum Bandwidth	Per Queue: 8%-16%-30%-45%	n/a	14-21	n/a
Jumbo Packets (3400cl and 6400cl Only)	Disabled	n/a	14-27	n/a

This chapter includes:

- **Rate Limiting:** Enables a port to limit the amount of bandwidth a user or device may utilize for inbound traffic on the switch.
- **Guaranteed Minimum Bandwidth (GMB):** Provides a method for ensuring that each of a port's outbound queues has a specified minimum consideration for sending traffic out on the link to another device.
- **Jumbo Packets (3400cl and 6400cl Only):** Enables ports operating at 1 Gbs or 10 Gbps speeds to accept inbound packets of up to 9220 bytes when configured for jumbo traffic.

All-Traffic Rate-Limiting for the 5300xl, 3400cl and 6400cl Switches

Feature	Default	Menu	CLI	Web
rate-limit < *limit-%* >	none	n/a	page 14-5	n/a
show rate-limit [*port-list*]	n/a	n/a	page 14-6	n/a

Note *This feature applies to the 5300xl, 3400cl, and 6400cl switches.*

Introduction

Rate-Limiting for all traffic provides a method for limiting the amount of bandwidth a user or device may utilize inbound on a switch port. This effectively sets an inbound usage level on a given port, and is a tool for enforcing maximum service level commitments granted to network users. This feature operates on a per-port level and is not configurable on port trunks. Note that rate-limiting is designed to be applied at the network edge to limit inbound traffic from non-critical users or to enforce service agreements such as those offered by Internet Service Providers (ISPs) to provide only the bandwidth for which a customer has paid.

Note On the 5300xl switches beginning with software release E.09.02, rate-limiting also can be applied by a RADIUS server during an authentication client session. See the chapter "*RADIUS Authentication and Accounting*" in the *Security Guide*, version January 2005 or later.

Note The 5300xl switches also support IGMP rate-limiting. For further information, see the chapter "*Multimedia Traffic Control with IP Multicast (IGMP)*" in the *Advanced Traffic Management Guide* for your switch.

Caution ***Rate-Limiting is intended for use on edge ports in a network. It is not recommended for use on links to other switches, routers, or servers within a network, or for use in the network core. Doing so can interfere with applications the network requires to function properly.***

Under network stress conditions, a port may allow occasional bursts of inbound traffic forwarding that exceed the port's configured rate. For this reason, rate-limiting should not be employed as a security feature.

Rate-Limiting Operation

Rate-Limiting operates on a per-port basis to allow only the specified percentage of the port's bandwidth to be used for inbound traffic. For example, if a 100 Mbps port negotiates a link at 100 Mbps and is rate-limit configured at 50%, then the inbound traffic flow through that port is limited to no more than 50 Mbps. Similarly, if the same port negotiates a 10 Mbps link, then it allows no more than 5 Mbps of inbound traffic.

Note for Rate-Limiting on Series 3400cl and 6400cl Switches

Configuring rate-limiting on a 3400cl or 6400cl switch port consumes one per-port rule and one per-port QoS mask. This affects the resources available for configuring QoS and ACLs. If you plan to configure QoS and/or ACLs on a 3400cl or 6400cl switch, refer to the chapters on these topics in the *Advanced Traffic Management Guide* for your switch.

Configuring Inbound Rate-Limiting

This command controls inbound usage of a port by setting a limit on the bandwidth available for inbound traffic. Beginning with software release E.10.02, the syntax of the rate-limiting command has changed to accommodate the new ICMP rate-limiting feature available. Refer to "ICMP Rate-Limiting" on page 14-10.

Syntax: [no] int < *port- list* > rate-limit < all | icmp >< 0..100 >

Configures an inbound traffic rate limit (on non-trunked ports) as a percentage of the bandwidth available on the link. You can configure a rate limit from either the global configuration level (as shown above) or from the port context level. The "no" form of the command disables rate-limiting on the specified ports. (Default: **Disabled***.)*

Notes:

- *Rate-Limiting applies only to non-trunked ports (and is not recommended for meshed ports).*
- *Configuring a rate limit of 0 (zero) on a port blocks all inbound traffic on that port. However, if this is the desired behavior for the port, ProCurve recommends that you use* **< *port-list* > disable** *to disable the port instead of configuring a rate limit of* **0**.

For example, either of the following commands configures an inbound rate limit of 60% on ports A3 - A5:

```
ProCurve (config)# int a3-a5 rate-limit all 60
ProCurve (eth-A3-A5)# rate-limit all 60
```

Displaying the Current Rate-Limit Configuration

This command displays the per-port rate-limit configuration in the running-config file.

Syntax: show rate-limit all [*port-list*]

Without **[*port-list*]**, *this command lists the rate-limit configuration for all ports on the switch. With* **[*port-list*]**, *this command lists the rate-limit configuration for the specified port(s). This command operates the same way in any CLI context.*

For example, if you wanted to view the rate-limiting configuration on the first five ports in the module in slot "A":

```
ProCurve# show rate-limit all a1-a5

 Inbound Rate Limit Maximum %

  Port  | Total
  ----- + --------
  A1    | Disabled
  A2    | Disabled
  A3    | 60
  A4    | 60
  A5    | 60
```

Ports A3-A5 are configured with a rate limit of 60 %. (Ports A1 and A2 are not configured for rate-limiting.)

Figure 14-1. Example of Listing the Rate-Limit Configuration

The **show config** command lists the per-port rate-limiting and Guaranteed Minimum Bandwidth configuration in the startup-config file. (Note that configuration changes performed with the CLI, but not followed by a **write mem** command do not appear in the startup-config file.)

```
ProCurve(config)# show config status
Running configuration is same as the startup configuration.
ProCurve(config)# show config

Startup configuration:

; J4850A Configuration Editor; Created on release #E.08.00

hostname "HPswitch"
module 1 type J4820A
snmp-server community "public" Unrestricted
vlan 1
   name "DEFAULT_VLAN"
   untagged A1-A24
   ip address dhcp-bootp
   exit
interface A1
   bandwidth-min output 10 20 20 50
   exit
interface A2
   bandwidth-min output 10 20 20 50
   exit
interface A3
   rate-limit all 60
   exit
interface A4
   rate-limit all 60
   exit
interface A5
   rate-limit all 60
   exit
```

The outbound port priority queues 1 - 4 for ports A1-A2 are configured with the indicated Guaranteed Minimum Bandwidth percentages.

Ports A3-A5 are configured with a rate limit of 60 %. (Ports A1 and A2 are not configured for rate-limiting.)

Figure 14-2. Example of Rate-Limit Settings Listed in the "show config" Output

Operating Notes for Rate-Limiting

- Rate-Limiting is available on all types of ports on the switches covered by this guide, and at all port speeds configurable for these devices. (Rate-Limiting is not allowed on trunked ports.)
- The configured rate limit on a port reflects the permitted forwarding rate from the port to the switching fabric, and is visible as the *average* rate of the outbound traffic originating from the rate-limited port. Also, rate-limiting reflects the available percentage of a port's entire inbound bandwidth. The rate of inbound flow for traffic of a given priority and the rate of flow from a rate-limited port to a particular queue of an outbound port are not measures of the actual rate limit enforced on a port.
- Rate-Limiting operates on a per-port basis, regardless of traffic priority. Configuring rate-limiting on a port where other features affect inbound port queue behavior (such as flow control) can result in the port not achieving its configured rate-limiting maximum. For example, in some situations with flow control configured on a rate-limited port, there can be enough "back pressure" to hold high-priority inbound traffic from the upstream device or application to a rate that is lower than the configured

rate limit. In this case, the inbound traffic flow does not reach the configured rate and lower priority traffic is not forwarded into the switch fabric from the rate-limited port. (This behavior is termed "head-of-line blocking" and is a well-known problem with flow-control.) In another type of situation, an outbound port can become oversubscribed by traffic received from multiple rate-limited ports. In this case, the actual rate for traffic on the rate-limited ports may be lower than configured because the total traffic load requested to the outbound port exceeds the port's bandwidth, and thus some requested traffic may be held off on inbound.

Note on Testing Rate-Limiting

Rate-Limiting is byte-based and is applied to the available bandwidth on a port, and not to any specific applications running through the port. If the total bandwidth requested by all applications together is less than the available, configured maximum rate, then no rate-limit can be applied. This situation occurs with a number of popular throughput-testing software applications, as well as most regular network applications. Consider the following example, which uses the minimum packet size:

The total available bandwidth on a 100 Mbps port "X" (allowing for Inter-packet Gap—IPG), with no rate-limiting restrictions, is:

(((100,000,000 bits) / 8) / 84) x 64 = 9,523,809 bytes per second

where:

- *The divisor (84) includes the 12-byte IPG, 8-byte preamble, and 64-bytes of data required to transfer a 64-byte packet on a 100 Mbps link.*
- *Calculated "bytes-per-second" includes packet headers and data. This value is the maximum "bytes-per-second" that 100 Mbps can support for minimum-sized packets.*

Suppose port "X" is configured with a rate limit of 50% (4,761,904 Mbytes). If a throughput-testing application is the only application using the port, and transmits 1 Mbyte of data through the port, it uses only 10.5% of the port's available bandwidth, *and the rate-limit of 50% has no effect*. This is because the maximum rate permitted (50%) exceeds the test application's bandwidth usage (126,642-164,062 bytes, depending upon packet size, which is only 1.3-1.7% of the available total). Before rate-limiting can occur, the test application's bandwidth usage must exceed the configured rate-limit. In this example, the bandwidth usage must exceed 50% of the port's total available bandwidth. That is, in this example, to test the rate-limit setting, the following must be true:

bandwidth usage > (0.50 x 9,523,809)

- **Network Stress Conditions:** Under normal network operating conditions, rate-limiting limits inbound traffic on a port to no more than the configured level. However, under network stress conditions, the port may allow occasional bursts of inbound traffic forwarding that exceed the configured rate.
- **Optimum Rate-Limiting Operation:** Optimum rate-limiting occurs with 64-byte packet sizes. Traffic with larger packet sizes can result in performance somewhat below the configured inbound bandwidth. This is to ensure the strictest possible rate-limiting of all sizes of packets.
- **Outbound Traffic Flow:** Configuring rate-limiting on a port does not control the rate of outbound traffic flow on the port.
- **Rate-Limiting Effect on Port Trunks:** Rate-Limiting is not supported on ports configured in a trunk group. Configuring a port for rate-limiting and then adding it to a trunk suspends rate-limiting on the port while it is in the trunk. Attempting to configure rate-limiting on a port that already belongs to a trunk generates the following message:

  `<port-list>: Operation is not allowed for a trunked port.`
- **Traffic Filters on Rate-Limited Ports:** Configuring a traffic filter on a port does not prevent the switch from including filtered traffic in the bandwidth-use measurement for rate-limiting. That is, where rate-limiting and traffic filtering are configured on the same port, the inbound, filtered traffic is included in the bandwidth measurement for calculating when the limit has been reached. Traffic filters include:
  - ACLs
  - Source-Port filters
  - Protocol filters
  - Multicast filters
- **Rate-Limiting Not Recommended on Mesh Ports:** Rate-Limiting can reduce the efficiency of paths through a mesh domain.

ICMP Rate-Limiting

In IP networks, ICMP messages are generated in response to either inquiries or requests from routing and diagnostic functions. These messages are directed to the applications originating the inquiries. In unusual situations, if the messages are generated rapidly with the intent of overloading network circuits, they can threaten network availability. This problem is visible in denial-of-service (DoS) attacks or other malicious behaviors where a worm or virus overloads the network with ICMP messages to an extent where no other traffic can get through. (ICMP messages themselves can also be misused as virus carriers). Such malicious misuses of ICMP can include a high number of ping packets that mimic a valid source IP address and an invalid destination IP address (spoofed pings), and a high number of response messages (such as Destination Unreachable error messages) generated by the network. ICMP Rate-Limiting provides a method for limiting the amount of bandwidth that may be utilized for inbound ICMP traffic on a switch port or trunk. This feature allows users to restrict ICMP traffic to levels that permit necessary ICMP functions, but throttle additional traffic that may be due to worms or viruses (reducing their spread and effect). In addition, this preserves inbound port bandwidth for non-ICMP traffic.

Terminology

All-Traffic Rate-Limiting: Applies a rate-limit to all inbound traffic, including ICMP traffic, received on an interface.

ICMP Rate-Limiting: Applies a rate-limit to all inbound ICMP traffic received on an interface, but does not limit other types of inbound traffic.

Spoofed Ping: An ICMP echo request packet intentionally generated with a valid source IP address and an invalid destination IP address. Spoofed pings are often created with the intent to oversubscribe network resources with traffic having invalid destinations.

Effect of ICMP Rate-Limiting

ICMP rate-limiting generally allows only a specified percentage of an interface's inbound bandwidth to be used for ICMP traffic. As a result, inbound bandwidth is preserved for non-ICMP traffic and the port or trunk throttles any sudden flood of inbound ICMP traffic that may be due to a worm or virus attack (or any other cause). Notice that ICMP rate-limiting does not throttle non-ICMP traffic. In cases where you want to throttle both ICMP traffic and all other inbound traffic on a given interface, you can configure both ICMP rate-limiting and all-traffic rate-limiting.

Caution

The ICMP protocol is necessary for routing, diagnostic, and error responses in an IP network. ICMP rate-limiting is primarily used for throttling worm or virus-like behavior, and should normally be configured to allow one to five per cent of available inbound bandwidth to be used for ICMP traffic. ***This feature should not be used to remove all ICMP traffic from a network.***

Note

Because all-traffic rate-limiting and ICMP rate-limiting operate similarly, the CLI command for the all-traffic version of rate-limiting has been modified for compatibility with the ICMP rate-limiting CLI command. Beginning with software release E.10.02, these commands appear in the following format:

rate-limit [all | icmp]

For more on all-traffic rate-limiting, refer to the chapter titled "Port Traffic Controls" in the *Management and Configuration Guide* for your switch (January 2005 or greater).

Network Application. Apply ICMP rate-limiting on all connected interfaces on the switch to effectively throttle excessive ICMP messaging from any source. On edge interfaces, where ICMP traffic should be minimal, a threshold of 1% of available bandwidth should be sufficient for most applications. On core interfaces, such as switch-to-switch and switch-to-router, a maximum threshold of 5% should be sufficient for normal ICMP traffic. ("Normal" ICMP traffic levels should be the maximums that occur when the network is rebooting.)

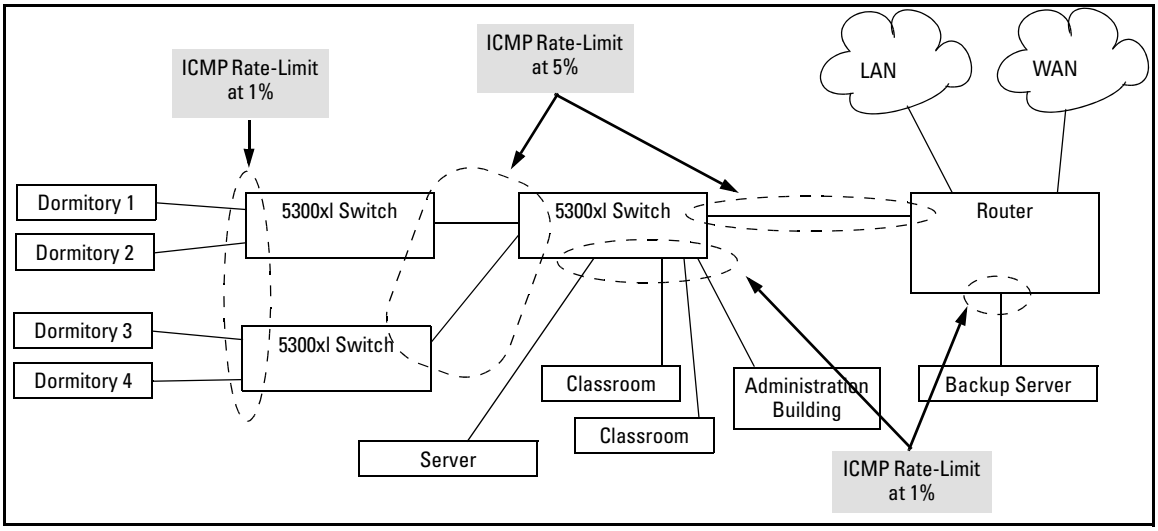

Figure 14-3. Example of ICMP Rate-Limiting

ICMP Rate-Limiting Operation. ICMP rate-limiting operates on an interface (per-port or per-trunk) basis to allow, on average, the highest expected amount of legitimate, inbound ICMP traffic. For example, if a 100 Mbps port negotiates a link to another switch at 100 Mbps and is ICMP rate-limit configured at 5%, then the inbound ICMP traffic flow through that port is limited to 5 Mbps. Similarly, if the same port negotiates a 10 Mbps link, then it allows 0.5 Mbps of inbound traffic. (For more on performance under varying operating conditions, refer to "Operating Notes for ICMP Rate-Limiting" on page 14-17.) If an interface experiences an inbound flow of ICMP traffic in excess of its configured limit, the switch generates a log message and an SNMP trap (if an SNMP trap receiver is configured).

Applying ICMP Rate-Limiting to a Port Trunk. These rules apply to ICMP rate-limiting when applied to a trunk:

- The configured ICMP traffic limit is applied as a percentage of all traffic inbound on the trunk.
- ICMP rate-limiting is only supported on a port trunk where all members of the trunk are *in the same module slot*. ICMP rate-limiting is **not** supported on trunks having members in multiple module slots.

- All ports belonging to a trunk configured for ICMP rate-limiting operate according to the trunk configuration, regardless of the ICMP rate-limiting state that existed on the port prior to its being added to the trunk. (While a port is in a trunk, any ICMP rate-limiting previously configured for that port is suspended, but remains in the switch configuration.)
- Removing a port from a trunk returns the port to whatever ICMP rate-limiting state existed on the port before it was put into the trunk.

Note

A rate-limited trunk should include only ports on the same slot/module. A rate-limited trunk configured across module boundaries is not supported and produces unpredictable rate-limiting operation and results.

Using Both ICMP and All-Traffic Rate-Limiting on an Interface. ICMP and all-traffic rate-limiting can be configured on the same interface. All-Traffic rate-limiting applies to all inbound traffic (including ICMP traffic), while ICMP rate-limiting applies only to inbound ICMP traffic.

Note that if the inbound, all-traffic load on an interface meets or exceeds the current all-traffic rate-limit while the ICMP traffic rate-limit on the same interface has not been reached, then all excess traffic will be dropped, including any inbound ICMP traffic above the all-traffic limit (regardless of whether the ICMP rate-limit has been reached). Suppose, for example:

- The all-traffic limit on port “X” is configured at 55% of the port’s bandwidth.
- The ICMP traffic limit on port “X” is configured at 2% of the port’s bandwidth.

If at a given moment:

- inbound ICMP traffic on port “X” is using 1% of the port’s bandwidth, and
- inbound traffic of all types on port “X” demands 61% of the ports’s bandwidth,

then all inbound traffic above 55% of the port’s bandwidth, including any additional ICMP traffic will be dropped as long as all inbound traffic combined on the port demands 55% or more of the port’s bandwidth.

Note

Under network stress conditions, an interface may allow occasional bursts of inbound ICMP traffic forwarding that exceed the interface’s configured ICMP traffic rate. Refer to “ICMP Rate-Limit Imposes an Average Bandwidth Limit” on page 18.

Configuring Inbound Rate-Limiting. This command controls inbound usage of a port by setting a limit on the bandwidth available for inbound traffic.

Syntax: [no] int < *port- list* | *trunk-list* > rate-limit icmp < 0..100 >

Configures inbound ICMP traffic rate limiting. You can configure a rate limit from either the global configuration level (as shown above) or from the interface context level. The **no** *form of the command disables ICMP rate-limiting on the specified interface(s). (Default:* **Disabled**.*)*

1 - 99*: Values in this range allow ICMP traffic as a percentage of the bandwidth available on the interface.*

0 *: This value causes an interface to drop all incoming ICMP traffic, and is not recommended. Refer to the Caution on page 11.*

Note: *ICMP Rate-Limiting is not supported on meshed ports. (Rate-limiting can reduce the efficiency of paths through a mesh domain).*

For example, either of the following commands configures an inbound rate limit of 1% on ports A3 - A5, which are used as network edge ports:

```
ProCurve(config)# int a3-a5 rate-limit icmp 1
ProCurve (eth-A3-A5)# rate-limit icmp 1
```

Displaying the Current Rate-Limit Configuration. This command displays the per-interface rate-limit configuration in the running-config file.

Syntax: show rate-limit icmp [*port-list* | *trunk-list*]

Without **[*port-list* | *trunk-list*]**, *this command lists the ICMP rate-limit configuration for all ports or trunks on the switch. With* **[*port-list* | *trunk-list*]**, *this command lists the rate-limit configuration for the specified interface(s). This command operates the same way in any CLI context.*

For example, if you wanted to view the rate-limiting configuration on the first six ports in the module in slot “B”:

```
ProCurve(config)# show rate-limit icmp b1-b6

 Inbound ICMP Rate Limit Maximum Percentage

         | Rate
  Port   | Limit
  ----- + --------
  B1     | Disabled
  B2     | 1
  B3     | 1
  B4     | 1
  B5     | 1
  B6     | Disabled
```

Ports B2-B5 are configured with an ICMP rate limit of 1%. (Ports B1 and B6 are not configured for ICMP rate-limiting.)

Figure 14-4. Example of Listing the Rate-Limit Configuration

The **show running** command displays the currently applied setting for any interfaces in the switch configured for ICMP rate limiting. The **show config** command displays this information for the configuration currently stored in the startup-config file. (Note that configuration changes performed with the CLI, but not followed by a **write mem** command do not appear in the startup-config file.)

```
ProCurve(config)# show config status
Running configuration is same as the startup configuration.

ProCurve(config)# show config
Startup configuration:

; J4850A Configuration Editor; Created on release #E.10.00

hostname "HPswitch"
module 2 type J8161A
module 4 type J8161A
snmp-server community "public" Unrestricted
vlan 1
   name "DEFAULT_VLAN"
   untagged B1-B24,D1-D24
   ip address dhcp-bootp
   exit
access-controller vlan-base 2000
interface B2
   rate-limit icmp 1
   exit
interface B3
   rate-limit icmp 1
   exit
interface B4
   rate-limit icmp 1
   exit
interface B5
   rate-limit icmp 1
   exit
```

The **show config status** command compares the content of the startup-config and running-config files and prints a report.

Ports B2-B5 are configured with an ICMP rate limit of 1%.

Figure 14-5. Example of ICMP Rate-Limit Settings Listed in the "show running" Output

ICMP Rate-Limiting Trap and Event Log Messages. If the switch detects a volume of inbound ICMP traffic on a port that exceeds the ICMP rate-limit configured for that port, it generates one SNMP trap and one informational Event Log message to notify the system operator of the condition. (The trap and Event Log message are sent within two minutes of the when the event occurred on the port.) For example:

```
I 06/30/05 11:15:42 RateLim: ICMP traffic exceeded
configured limit on port 1
```

These trap and Event Log messages provide an advisory that inbound ICMP traffic on a given interface has exceeded the configured maximum. The additional ICMP traffic is dropped, but the excess condition may indicate an infected host (or other traffic threat or network problem) on that interface. The system operator should investigate the attached devices or network conditions further.

The switch does not send more traps or Event Log messages for excess ICMP traffic on the affected port until the system operator resets the port's ICMP trap function. The reset can be done through SNMP from a network management station or through the CLI with the following **setmib** command.

Syntax: setmib hpIcmpRatelimitPortAlarmflag.< *internal-port-#* > -i 1

On a port configured with ICMP rate-limiting, this command resets the ICMP trap function, which allows the switch to generate a new SNMP trap and an Event Log message if ICMP traffic in excess of the configured limit is detected on the port.

For example, an operator noticing an ICMP rate-limiting trap or Event Log message originating with port A1 on a 5300xl switch would use the following **setmib** command to reset the port to send a new message if the condition occurs again.

```
ProCurve(config)# setmib hpicmpratelimitportalarm-
flag.1 -i 1
```

Operating Notes for ICMP Rate-Limiting

Note on Testing Rate-Limiting

ICMP rate-limiting is byte-based and is applied to the available bandwidth on an interface. If the total bandwidth requested by all ICMP traffic is less than the available, configured maximum rate, then no ICMP rate-limit can be applied. That is, an interface must be receiving more inbound ICMP traffic than the configured bandwidth limit allows. If the interface is configured with both **rate-limit all** and **rate-limit icmp**, then the ICMP limit can be met or exceeded only if the rate limit for all types of inbound traffic has not already been met or exceeded. Also, to test the ICMP limit it is necessary to generate ICMP traffic that exceeds the configured ICMP rate limit. Using the recommended settings—1% for edge interfaces and 5% maximum for core interfaces—it is easy to generate sufficient traffic. However, if you are testing with higher maximums, it is necessary to ensure that the ICMP traffic volume exceeds the configured maximum. Note also that testing ICMP rate-limiting where inbound ICMP traffic on a given interface has destinations on multiple outbound interfaces, the test results must be based on the received outbound ICMP average aggregate traffic over time.

ICMP rate-limiting is not reflected in counters monitoring inbound traffic because inbound packets are counted before the ICMP rate-limiting drop action occurs.

- **Interface Support:** ICMP rate-limiting is available on all types of ports and trunks on the switches covered by this guide, and at all port speeds configurable for these devices.
- **Rate-Limiting Not Permitted on Mesh Ports:** Either type of rate-limiting can reduce the efficiency of paths through a mesh domain.
- **Monitoring (Mirroring) ICMP Rate-Limited Interfaces:** If monitoring is configured, packets dropped by ICMP rate-limiting on a monitored interface will still be forwarded to the designated monitor port. (Monitoring shows what traffic is inbound on an interface, and is not affected by "drop" or "forward" decisions.)
- **ICMP Rate-Limit Imposes an Average Bandwidth Limit:** The configured ICMP rate limit on an interface reflects the permitted *average* forwarding rate for ICMP traffic from the interface to the switching fabric. (Note that while occasional bursts of traffic above the configured rate may be observed, the average rate will conform to the configured limit). Rate-Limiting is packet-based, and is calculated internally as the maximum number of 64-byte packets that can be forwarded within the configured bandwidth percentage. Where traffic includes packets larger than 64 bytes, actual average rates may be lower than the configured rate. Also, ICMP rate-limiting reflects the available percentage of an interface's entire inbound bandwidth. The rate of inbound flow for traffic of a given priority and the rate of flow from an ICMP rate-limited interface to a particular queue of an outbound interface are not measures of the actual ICMP rate limit enforced on an interface.
- **Network Stress Conditions:** Under normal network operating conditions, ICMP rate-limiting limits inbound traffic on an interface to no more than the configured level. However, under network stress conditions, the interface may allow occasional, brief bursts of inbound traffic forwarding that exceed the configured rate.
- **Below-Maximum Rates:** ICMP rate-limiting operates on a per-interface basis, regardless of traffic priority. Configuring ICMP rate-limiting on an interface where other features affect inbound port queue behavior (such as flow control) can result in the interface not achieving its configured ICMP rate-limiting maximum. For example, in some situations with flow control configured on an ICMP rate-limited interface, there can be enough "back pressure" to hold high-priority inbound traffic from the upstream device or application to a rate that does not allow bandwidth for lower-priority ICMP traffic. In this case, the inbound traffic flow may not permit the forwarding of ICMP traffic into the switch fabric from the rate-limited interface. (This behavior is termed "head-of-line blocking" and is a well-known problem with flow-control.) In cases where both types of rate-limiting (**rate-limit all** and **rate-limit icmp**) are configured on the same interface, this situation is more likely to occur. In another type of situa-

tion, an outbound interface can become oversubscribed by traffic received from multiple ICMP rate-limited interfaces. In this case, the actual rate for traffic on the rate-limited interfaces may be lower than configured because the total traffic load requested to the outbound interface exceeds the interface's bandwidth, and thus some requested traffic may be held off on inbound.

- **Optimum Rate-Limiting Operation:** Optimum rate-limiting occurs with 64-byte packet sizes. Traffic with larger packet sizes can result in performance somewhat below the configured inbound bandwidth. This is to ensure the strictest possible rate-limiting of all sizes of packets.
- **Heavy Memory Usage:** Combinations of intensive QoS, rate-limiting, and/or IDM ACL service demands on a switch can impose heavy memory usage on the switch's dynamic hardware rule processor, and can sometimes result in slower system performance. In such cases, moving support for some of the service load to other devices can improve performance.
- **Outbound Traffic Flow:** Configuring ICMP rate-limiting on an interface does not control the rate of outbound traffic flow on the interface.
- **Traffic Filters on Rate-Limited Interfaces:** Configuring a traffic filter on an interface does not prevent the switch from including filtered traffic in the bandwidth-use measurement for either type of rate-limiting (ICMP or all). That is, where rate-limiting and traffic filtering are configured on the same interface, the inbound, filtered traffic is included in the bandwidth measurement for calculating when the limit has been reached. Traffic filters include:
  - ACLs
  - Source-Port filters
  - Protocol filters
  - Multicast filters
- **Determining the 5300xl Switch Port Number Used in ICMP Port Reset Commands To Enable Excess ICMP Traffic Notification Traps and Event Log Messages:** Use the internal port numbers described in this section with the **setmib** command described on page 17. The port number included in the command corresponds to the internal number the switch maintains for the designated port, and not the port's external (slot/number) identity. To match the port's external slot/number to the internal port number, use the **walkmib ifDescr** command, as shown in the following figure:

```
ProCurve# walkmib ifDescr
ifDescr.1 = A1
ifDescr.2 = A2
ifDescr.3 = A3
.
.
.
ifDescr.23 = A23
ifDescr.24 = A24
ifDescr.27 = B1
ifDescr.28 = B2
ifDescr.29 = B3
.
.
.
ifDescr.48 = B22
ifDescr.49 = B23
ifDescr.50 = B24
.
.
.
```

Beginning and Ending of Port Number Listing for Slot A

Beginning and Ending of Port Number Listing for Slot B

Figure 14-6. Matching Internal Port Numbers to External Slot/Port Numbers

Guaranteed Minimum Bandwidth (GMB) on the Series 5300xl Switches

This section applies only to the Series 5300xl switches.

Feature	Default	Menu	CLI	Web
bandwidth-min output	Per-Queue: 8%-16%-30%-45%	n/a	page 14-23	n/a
show bandwidth output [*port-list*]	n/a	n/a	page 14-21	n/a

Introduction

Guaranteed Minimum Bandwidth (GMB) provides a method for ensuring that each of a given port's outbound traffic priority queues has a specified minimum consideration for sending traffic out on the link to another device. This can prevent a condition where applications generating lower-priority traffic in the network are frequently or continually "starved" by high volumes of higher-priority traffic. You can configure GMB per-port or per-trunk.

Terminology

Oversubscribed Queue: The condition where there is insufficient bandwidth allocated to a particular outbound priority queue for a given port. If additional, unused bandwidth is not available, the port delays or drops the excess traffic.

GMB Operation

The switch services per-port outbound traffic in a descending order of priority; that is, from the highest priority to the lowest priority. Each port offers four prioritized, outbound traffic queues. Tagged VLAN traffic is prioritized according to the 802.1p priority the traffic carries. Untagged VLAN traffic is assigned a priority of "**0**" (normal).

Table 14-1. Per-Port Outbound Priority Queues

802.1p Priority Settings in Tagged VLAN Packets*	Outbound Priority Queue for a Given Port
1 (low) 2 (low)	1
0 (normal) 3 (normal)	2
4 (medium) 5 (medium)	3
6 (high) 7(high)	4

*The switch processes outbound traffic from an untagged port at the "0" (normal) priority level.

You can use GMB to reserve a specific percentage of each port's available outbound bandwidth for each of the four priority queues. This means that regardless of the amount of high priority outbound traffic on a port, you can ensure that there will always be bandwidth reserved for lower-priority traffic.

Since the switch services outbound traffic according to priority (highest to lowest), the highest-priority outbound traffic on a given port automatically receives the first priority in servicing. Thus, in most applications, it is necessary only to specify the minimum bandwidth you want to allocate to the lower three priority queues. In this case, the high-priority traffic automatically receives all unassigned bandwidth without starving the lower-priority queues.

Conversely, configuring a bandwidth minimum on only the high-priority outbound queue of a port (and not providing a bandwidth minimum for the lower-priority queues) is not recommended because it may "starve" the lower-priority queues. (See the Note, below.)

Note

For a given port, when the demand on one or more outbound queues exceeds the minimum bandwidth configured for those queues, the switch apportions unallocated bandwidth to these queues on a priority basis. As a result, specifying a minimum bandwidth for a high-priority queue but not specifying a minimum for lower-priority queues can starve the lower-priority queues during periods of high demand on the high priority queue. For example, if a port configured to allocate a minimum bandwidth of 80% for outbound high-priority traffic experiences a demand above this minimum, then this burst starves lower-priority queues that *do not have a minimum configured*. Normally, this will not altogether halt lower priority traffic on the network, but will likely cause delays in the delivery of the lower-priority traffic.

The sum of the GMB settings for all four outbound queues on a given port cannot exceed 100%.

Configuring Guaranteed Minimum Bandwidth for Outbound Traffic

For any port or group of ports you can configure either the default minimum bandwidth settings for each outbound priority queue or a customized bandwidth allocation. For most applications, ProCurve recommends configuring GMB with the same values on all ports on the switch so that the outbound traffic profile is consistent for all outbound traffic. However, there may be instances where it may be advantageous to configure special profiles on connections to servers or to the network infrastructure (such as links to routers, other switches, or to the network core).

Syntax: [no] int < *port-list* > bandwidth-min output

Configures the minimum bandwidth allocation for the outbound priority queue for each port in **< *port-list* >**. *The default values are:*

- *Queue 1 (low priority): 8%*
- *Queue 2 (normal or unmarked priority): 16%*
- *Queue 3 (medium priority): 30%*
- *Queue 4 (high priority): 45%*

The **no** *form of the command disables GMB for all ports in* **< *port-list* >**. *In this state, which is the equivalent of setting all outbound queues on a port to* **0** *(zero), a high level of higher-priority traffic can starve lower-priority queues, which can slow or halt lower-priority traffic in the network. You can configure bandwidth minimums from either the global configuration level (as shown above) or from the port context level. For information on outbound port queues, refer to table 14-1, "Per-Port Outbound Priority Queues" on page 14-22.*

Syntax: [no] int < *port-list* > bandwidth-min output (*Continued*)

[< *queue1%* > < *queue2%* > < *queue3%* > < *queue4%* >]

For ports in **< *port-list* >**, *specifies the minimum outbound bandwidth as a percent of the total bandwidth for each outbound queue. The queues receive service in descending order of priority. You must specify a bandwidth percent value for all four queues, and the sum of the bandwidth percentages must not exceed 100%. (***0** *is a value for a queue percentage setting. See the* ***Note****, below.) Configuring a total of less than 100% across the four queues results in unallocated bandwidth that remains harmlessly unused unless a given queue becomes oversubscribed. In this case, the unallocated bandwidth is apportioned to oversubscribed queues in descending order of priority. For example, if you configure a minimum of 10% for queues 1 - 3, and 0% for queue 4, then the unallocated bandwidth will be available to all four queues in the following prioritized order:*

1. *Queue 4 (high priority)*
2. *Queue 3 (medium priority)*
3. *Queue 2 (normal priority)*
4. *Queue 1 (low priority)*

A setting of **0** *(zero %) on a queue means that no bandwidth minimum is specifically reserved for that queue for each of the ports in* **< *port-list* >**. *Also, there is no benefit to setting the high-priority queue (queue 4) to* **0** *(zero) unless you want the medium queue (queue 3) to be able to support traffic bursts above its guaranteed minimum.*

Notes: *Configuring 0% for a queue can result in that queue being starved if any higher queue becomes oversubscribed and is then given all unused bandwidth.*

The switch applies the bandwidth calculation to the link speed the port is currently using. For example, if a 10/100 Mbs port negotiates to 10 Mbps on the link, then it bases its GMB calculations on 10 Mbps; not 100 Mbps.

Use **show bandwidth output < *port-list* >** *to display the current GMB configuration. (The* **show config** *and* **show running** *commands do not include GMB configuration data.)*

For example, suppose you wanted to configure the following outbound minimum bandwidth availability for ports A1 and A2:

Priority of Outbound Port Queue	Minimum Bandwidth %	Effect on Outbound Bandwidth Allocation
4	50	Queue 4 has the first priority use of all outbound bandwidth not specifically allocated to queues 1 - 3. If, for example, bandwidth allocated to queue 1 is not being used and queues 3 and 4 become oversubscribed, queue 4 has first-priority use of the unused bandwidth allocated to queue 1.
3	20	Queue 3 has a guaranteed minimum bandwidth of 20% available for outbound traffic. If queue 3 becomes oversubscribed and queue 4 is not already using all of the unallocated bandwidth, then queue 3 can use the unallocated bandwidth. Also, any unused bandwidth allocated to queues 1 or 2 is available to queue 3 if queue 4 has not already claimed it.
2	20	Queue 2 has a guaranteed minimum bandwidth of 20% and, if oversubscribed, is subordinate to queues 4 and 3 in priority for any unused outbound bandwidth available on the port.
1	10	Queue 1 has a guaranteed minimum bandwidth of 10% and, if oversubscribed, is subordinate to queues 4, 3, and 2 for any unused outbound bandwidth available on the port.

Either of the following commands configures ports A1 and A2 with the bandwidth settings shown in the preceding table:

```
ProCurve(config)#int a1-a2 bandwidth-min output 10 20 20 50
ProCurve(eth-A1-A2)#bandwidth-min output 10 20 20 50
```

Displaying the Current Guaranteed Minimum Bandwidth Configuration

This command displays the per-port GMB configuration in the running-config file.

Syntax: show bandwidth output [*port-list*]

Without **[*port-list*]**, *this command lists the GMB configuration for all ports on the switch. With* **[*port-list*]**, *this command lists the GMB configuration for the specified ports. This command operates the same way in any CLI context. If the command lists* **Disabled** *for a port, there are no bandwidth minimums configured for any queue on the port. (Refer to the description of the* **no** *form of the* bandwidth-min output *command on page 14-23.)*

For example, to display the GMB configuration resulting from either of the above commands:

```
ProCurve# show bandwidth output a1-a5

 Outbound Guaranteed Minimum Bandwidth %

        | Low        Normal     Medium     High
  Port  | Priority   Priority   Priority   Priority
  ----- + --------- --------- --------- ---------
  A1    | 10         20         20         50
  A2    | 10         20         20         50
  A3    | 8          16         30         45
  A4    | 8          16         30         45
  A5    | 8          16         30         45
```

User-Configured Minimum Bandwidth Settings

Default Minimum Bandwidth Settings

Figure 14-7. Example of Listing the Guaranteed Minimum Bandwidth Configuration

For an example listing the GMB configuration in the startup-config file, refer to figure 14-2 on page 14-7.

GMB Operating Notes

Granularity of Applied GMB Settings. Incremental bandwidth settings greater than 0 and less than 100 are internally computed in steps of 1.6%. Thus, the switch internally converts a configured bandwidth percentage to the closest multiple of 1.6.

Jumbo Packets on the Series 3400cl and Series 6400cl Switches

This section applies only to the ProCurve Series 3400cl and Series 6400cl switches.

Feature	Default	Menu	CLI	Web
display VLAN jumbo status	n/a	—	14-29	—
configure jumbo VLANs	Disabled	—	14-31	—

The *Maximum Transmission Unit* (MTU) is the maximum size IP packet the switch can receive for Layer 2 packets inbound on a port. The switch drops any inbound packets larger than the MTU allowed on the port. On ports operating at 10 Mbps or 100 Mbps, the MTU is fixed at 1522 bytes. However, ports operating at 1 Gbs or 10 Gbps speeds accept forward packets of up to 9220 bytes (including four bytes for a VLAN tag) when configured for jumbo traffic. In the 3400cl/6400cl switches you can enable inbound jumbo packets on a per-VLAN basis. That is, on a VLAN configured for jumbo traffic, all ports belonging to that VLAN and *operating* at 1 Gbs or 10 Gbps allow inbound jumbo packets of up to 9220 bytes. (Regardless of the mode configured on a given jumbo-enabled port, if the port is operating at only 10 Mbps or 100 Mbps, only packets that do not exceed 1522 bytes are allowed inbound on that port.)

Terminology

Jumbo Packet: On the 3400cl/6400cl switches, an IP packet exceeding 1522 bytes in size. The maximum Jumbo packet size is 9220 bytes. (This size includes 4 bytes for the VLAN tag.)

Jumbo VLAN: A VLAN configured to allow inbound jumbo traffic. All ports belonging to a jumbo and operating at 1 Gbps or higher can receive jumbo packets from external devices. If the switch is in a meshed domain, then all meshed ports (operating at 1 Gbps or higher) on the switch will accept jumbo traffic from other devices in the mesh.

MTU (*Maximum Transmission Unit)*: This is the maximum-size IP packet the switch can receive for Layer 2 packets inbound on a port. The switch allows jumbo packets of up to 9220 bytes.

Standard MTU: On the 3400cl/6400cl switches, an IP packet of 1522 bytes in size. (This size includes 4 bytes for the VLAN tag.)

Operating Rules

- **Required Port Speed:** The 3400cl/6400cl switches allow inbound and outbound jumbo packets on ports operating at speeds of 1 gigabit or higher. At lower port speeds, only standard (1522-byte or smaller) packets are allowed, regardless of the jumbo configuration.
- **Flow Control:** Disable flow control (the default setting) on any ports or trunks through which you want to transmit or receive jumbo packets. Leaving flow control enabled on a port can cause a high rate of jumbo drops to occur on the port.
- **Switch Meshing:** If you enable jumbo traffic on a VLAN in a 3400cl or 6400cl switch, then all meshed ports on the switch will be enabled to support jumbo traffic. (On a given meshed switch, every meshed port operating at 1 Gbps or higher becomes a member of every VLAN configured on the switch.)
- **GVRP Operation:** A VLAN enabled for jumbo traffic cannot be used to create a dynamic VLAN. A port belonging to a statically configured, jumbo-enabled VLAN cannot join a dynamic VLAN.
- **Port Adds and Moves:** If you add a port to a VLAN that is already configured for jumbo traffic, the switch enables that port to receive jumbo traffic. If you remove a port from a jumbo-enabled VLAN, the switch disables jumbo traffic capability on the port only if the port is not currently a member of another jumbo-enabled VLAN. This same operation applies to port trunks.
- **Jumbo Traffic Sources:** A port belonging to a jumbo-enabled VLAN can receive inbound jumbo packets through any VLAN to which it belongs, including non-jumbo VLANs. For example, if VLAN 10 (without jumbos enabled) and VLAN 20 (with jumbos enabled) are both configured on a switch, and port 1 belongs to both VLANs, then port 1 can receive jumbo traffic from devices on either VLAN. For a method to allow only some ports in a VLAN to receive jumbo traffic, refer to “Operating Notes for Jumbo Traffic-Handling” on page 14-32.

Configuring Jumbo Packet Operation

Command	Page
show vlans	14-30
show vlans ports < port-list >	14-31
show vlans < vid >	14-31
jumbo	14-31

Overview

1. Determine the VLAN membership of the ports or trunks through which you want the switch to accept inbound jumbo traffic. For operation with GVRP enabled, refer to the GVRP topic under “Operating Rules”, above.
2. Ensure that the ports through which you want the switch to receive jumbo packets are operating at least at gigabit speed. (Check the **Mode** field in the output for the **show interfaces brief *< port-list >*** command.)
3. Use the **jumbo** command to enable jumbo packets on one or more VLANs statically configured in the switch. (All ports belonging to a jumbo-enabled VLAN can receive jumbo packets.
4. Execute **write memory** to save your configuration changes to the startup-config file.

Viewing the Current Jumbo Configuration

Syntax: show vlans

Lists the static VLANs configured on the switch and includes a **Jumbo** *column to indicate which VLANs are configured to support inbound jumbo traffic. All ports belonging to a jumbo-enabled VLAN can receive jumbo traffic. (For more information refer to “Operating Notes for Jumbo Traffic-Handling” on page 14-32.) See figure 14-8, below.*

```
ProCurve(config)# show vlans

 Status and Counters - VLAN Information

  Maximum VLANs to support : 8
  Primary VLAN : DEFAULT_VLAN
  Management VLAN :

  802.1Q VLAN ID Name         | Status     Voice Jumbo
  -------------- ------------ + ---------- ----- -----
  1              DEFAULT_VLAN | Port-based No    Yes
  5              VLAN5        | Port-based No    No
  22             VLAN22       | Port-based No    No
```

Indicates which static VLANs are configured to enable jumbo packets.

Figure 14-8. Example Listing of Static VLANs To Show Jumbo Status Per VLAN

Syntax: show vlans ports < *port-list* >

Lists the static VLANs to which the specified port(s) belong, including the **Jumbo** *column to indicate which VLANs are configured to support jumbo traffic. Entering only one port in* < *port-list* > *results in a list of all VLANs to which that port belongs. Entering multiple ports in* < *port-list* > *results in a superset list that includes the VLAN memberships of all ports in the list, even though the individual ports in the list may belong to different subsets of the complete VLAN listing. For example, if port 1 belongs to VLAN 1, port 2 belongs to VLAN 10, and port 3 belongs to VLAN 15, then executing this command with a* < *port-list* > *of* **1-3** *results in a listing of all three VLANs, even though none of the ports belong to all three VLANS. (Refer to figure 14-9.)*

```
ProCurve# show vlans ports 1-3

 Status and Counters - VLAN Information - for ports 1-3

  802.1Q VLAN ID Name         | Status     Voice Jumbo
  -------------- ------------ + ---------- ----- -----
  1              DEFAULT_VLAN | Port-based No    Yes
  10             VLAN10       | Port-based No    No
  15             VLAN15       | Port-based No    No
```

Indicates which static VLANs are configured to enable jumbo packets.

Figure 14-9. Example of Listing the VLAN Memberships for a Range of Ports

Syntax: show vlans < *vid* >

This command shows port membership and jumbo configuration for the specified < *vid* >.

```
ProCurve(config)# show vlan 100
 Status and Counters - VLAN Information - Ports - VLAN 100
  802.1Q VLAN ID : 100
  Name : VLAN100
  Status : Port-based
  Voice : No
  Jumbo : No

  Port Information Mode      Unknown VLAN Status
  ---------------- -------- ------------ ----------
  1                Tagged   Learn        Up
  2                Tagged   Learn        Up
  3                Tagged   Learn        Up
  4                Tagged   Learn        Down
  5                Tagged   Learn        Up
```

Lists the ports belonging to VLAN 100 and whether the VLAN is enabled for jumbo packet traffic.

Figure 14-10. Example of Listing the Port Membership and Jumbo Status for a VLAN

Enabling or Disabling Jumbo Traffic on a VLAN

Syntax: vlan < *vid* > jumbo
[no] vlan < *vid* > jumbo

Configures the specified VLAN to allow jumbo packets on all ports on the switch that belong to that VLAN. If the VLAN is not already configured on the switch, **vlan < *vid* > jumbo** *also creates the VLAN. Note that a port belonging to one jumbo VLAN can receive jumbo packets through any other VLAN statically configured on the switch, regardless of whether the other VLAN is enabled for jumbo packets. The* **[no]** *form of the command disables inbound jumbo traffic on all ports in the specified VLAN that do not also belong to another VLAN that is enabled for jumbo traffic. In a VLAN context, the command forms are* **jumbo** *and* **no jumbo**. *(Default: Jumbos disabled on the specified VLAN.)*

Operating Notes for Jumbo Traffic-Handling

- ProCurve does not recommend configuring a voice VLAN to accept jumbo packets. Voice VLAN packets are typically small, and allowing a voice VLAN to accept jumbo packet traffic can degrade the voice transmission performance.
- You can configure the default, primary, and/or (if configured) the management VLAN to accept jumbo packets on all ports belonging to the VLAN.
- When the switch applies the default MTU (1522-bytes) to a VLAN, all ports in the VLAN can receive incoming packets of up to 1522 bytes in length. When the switch applies the jumbo MTU (9220 bytes) to a VLAN, all ports in that VLAN can receive incoming packets of up to 9220 bytes in length. A port receiving packets exceeding the applicable MTU drops such packets, causing the switch to generate an Event Log message and increment the "Giant Rx" counter (displayed by **show interfaces < *port-list* >**).
- The switch does not allow flow control and jumbo packet capability to co-exist on a port. Attempting to configure both on the same port generates an error message in the CLI and sends a similar message to the Event Log.
- The default MTU on the 3400cl/6400cl switches is 1522 bytes (including 4 bytes for the VLAN tag). The jumbo MTU is 9220 bytes (including 4 bytes for the VLAN tag).
- When a port is not a member of any jumbo-enabled VLAN, it drops all jumbo traffic. If the port is receiving "excessive" inbound jumbo traffic, the port generates an Event Log message to notify you of this condition. This same condition generates a Fault-Finder message in the Alert log of the switch's web browser interface, and also increments the switch's "Giant Rx" counter.
- If you do not want all ports in a given VLAN to accept jumbo packets, you can consider creating one or more jumbo VLANs with a membership comprised of only the ports you want to receive jumbo traffic. Because a port belonging to one jumbo-enabled VLAN can receive jumbo packets through any VLAN to which it belongs, this method enables you to include both jumbo-enabled and non-jumbo ports within the same VLAN. For example, suppose you wanted to allow inbound jumbo packets only on ports 6, 7, 12, and 13. However, these ports are spread across VLAN 100 and VLAN 200, and also share these VLANs with other ports you want

excluded from jumbo traffic. A solution is to create a third VLAN with the sole purpose of enabling jumbo traffic on the desired ports, while leaving the other ports on the switch disabled for jumbo traffic. That is:

	VLAN 100	VLAN 200	VLAN 300
Ports	6-10	11-15	6, 7, 12, and 13
Jumbo-Enabled?	No	No	Yes

If there are security concerns with grouping the ports as shown for VLAN 300, you can either use source-port filtering to block unwanted traffic paths or create separate jumbo VLANs, one for ports 6 and 7, and another for ports 12 and 13.

- **Outbound Jumbo Traffic.** Any port operating at 1 Gbps or higher can transmit outbound jumbo packets through any VLAN, regardless of the jumbo configuration. The VLAN is not required to be jumbo-enabled, and the port is not required to belong to any other, jumbo enabled VLANs. This can occur in situations where a non-jumbo VLAN includes some ports that do not belong to another, jumbo-enabled VLAN and some ports that do belong to another, jumbo-enabled VLAN. In this case, ports capable of receiving jumbo packets can forward them to the ports in the VLAN that do not have jumbo capability.

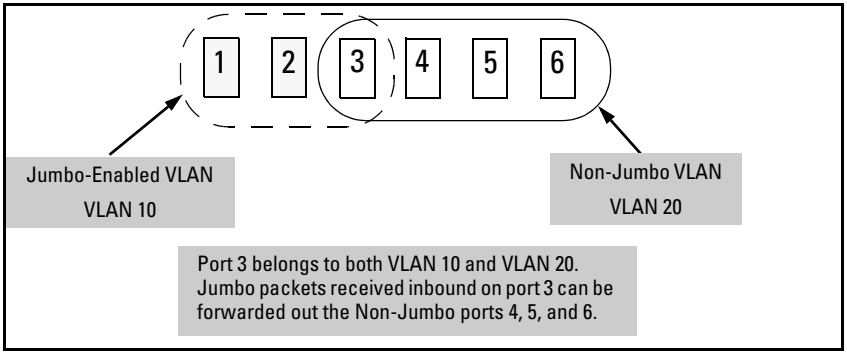

Figure 14-11. Forwarding Jumbo Packets Through Non-Jumbo Ports

Jumbo packets can also be forwarded out non-jumbo ports when the jumbo packets received inbound on a jumbo-enabled VLAN are routed to another, non-jumbo VLAN for outbound transmission on ports that have no memberships in other, jumbo-capable VLANs. Where either of the above scenarios is a possibility, the downstream device must be configured to accept the jumbo traffic. Otherwise, this traffic will be dropped by the downstream device.

- **Jumbo Traffic in a Switch Mesh Domain.** Note that if a switch belongs to a meshed domain, but does not have any VLANs configured to support jumbo traffic, then the meshed ports on that switch will drop any jumbo packets they receive from other devices. In this regard, if a mesh domain includes any ProCurve Series 5300xl switches and/or ProCurve 1600M/2400M/2424M/4000M/8000M switches along with Series 3400cl and Series 6400cl switches configured to support jumbo traffic, only the 3400cl/6400cl switches will receive jumbo packets. The other switch models in the mesh will drop such packets. For more information on switch meshing, refer to the chapter titled "Switch Meshing" in the *Advanced Traffic Management Guide* for your switch.

Troubleshooting

A VLAN is configured to allow jumbo packets, but one or more ports drops all inbound jumbo packets. The port may not be operating at 1 gigabit or higher. Regardless of a port's configuration, if it is actually operating at a speed lower than 1 gigabit, it drops inbound jumbo packets. For example, if a port is configured for **Auto** mode (**speed-duplex auto**), but has negotiated a 100 Mbps speed with the device at the other end of the link, then the port cannot receive inbound jumbo packets. To determine the actual operating speed of one or more ports, view the **Mode** field in the output for the following command:

show interfaces brief ***< port-list >***

A non-jumbo port is generating "Excessive undersize/giant packets" messages in the Event Log. The 3400cl/6400cl switches can transmit outbound jumbo traffic on any port, regardless of whether the port belongs to a jumbo VLAN. In this case, another port in the same VLAN on the switch may be jumbo-enabled through membership in a different, jumbo-enabled VLAN, and may be forwarding jumbo packets received on the jumbo VLAN to non-jumbo ports. Refer to "Outbound Jumbo Traffic" on page 14-33.

15

Configuring for Network Management Applications

Contents

Using SNMP Tools To Manage the Switch 15-3
- Overview 15-3
- SNMP Management Features 15-4
- Configuring for SNMP Access to the Switch 15-4
- Configuring for SNMP Version 3 Access to the Switch 15-5
- SNMP Version 3 Commands 15-6
  - Enabling SNMPv3 15-7
  - SNMPv3 Users 15-7
  - Group Access Levels 15-10
  - SNMPv3 Communities 15-11
  - Menu: Viewing and Configuring non-SNMP version 3 Communities 15-13
  - CLI: Viewing and Configuring SNMP Community Names 15-14
- SNMPv3 Notification and Traps 15-16
  - SNMPv1 and SNMPv2c Trap Features 15-19
  - CLI: Configuring and Displaying Trap Receivers 15-19
  - Using the CLI To Enable Authentication Traps 15-22
- Advanced Management: RMON 15-22

LLDP (Link-Layer Discovery Protocol) 15-24
- Terminology 15-25
- General LLDP Operation 15-27
  - LLDP-MED 15-27
- Packet Boundaries in a Network Topology 15-27
- Configuration Options 15-28
- Options for Reading LLDP Information Collected by the Switch . . 15-30
- LLDP and LLDP-MED Standards Compatibility 15-31

LLDP Operating Rules 15-31
LLDP Data Management on the Series 3400cl and 6400cl Switches 15-32
LLDP Neighbor Data 15-32
Configuring LLDP Operation 15-33
Viewing the Current Configuration 15-34
Configuring Global LLDP Packet Controls 15-37
Configuring SNMP Notification Support 15-41
Changing the Minimum Interval for Successive Data Change Notifications for the Same Neighbor 15-42
Configuring Per-Port Transmit and Receive Modes 15-42
Configuring Basic LLDP Per-Port Advertisement Content 15-43
Configuring Support for Port Speed and Duplex Advertisements on the 5300xl and 4200vl Switches 15-46
LLDP-MED (Media-Endpoint-Discovery) for the 5300xl and 4200vl Switches 15-47
LLDP-MED Topology Change Notification 15-50
LLDP-MED Fast Start Control 15-51
Advertising Device Capability, Network Policy, PoE Status and Location Data 15-52
Configuring Location Data for LLDP-MED Devices 15-56
Displaying Advertisement Data 15-62
Displaying Switch Information Available for Outbound Advertisements 15-63
Displaying LLDP Statistics 15-68
LLDP Operating Notes 15-70
LLDP and CDP Data Management 15-72
LLDP and CDP Neighbor Data 15-72
CDP Operation and Commands 15-74

Using SNMP Tools To Manage the Switch

Overview

You can manage the switch via SNMP from a network management station running an application such as ProCurve Manager (PCM) or ProCurve Manager Plus (PCM+). For more on PCM and PCM+, visit the ProCurve Networking web site at:

www.procurve.com

Click on **products index** in the sidebar, then click on the appropriate link appearing under the **Network Management** heading.

This section includes:

- An overview of SNMP management for the switch
- Configuring the switches for:
  - SNMP Communities (page 15-11)
  - Trap Receivers and Authentication Traps (page 15-16)
- Information on advanced management through RMON Support (page 15-22)

To implement SNMP management, the switch must have an IP address, configured either manually or dynamically (using DHCP or Bootp). If multiple VLANs are configured, each VLAN interface should have its own IP address. For DHCP use with multiple VLANs, refer to the section titled “The Primary VLAN” in the “Static Virtual LANs (VLANs)” chapter of the Advanced Traffic Management Guide for your switch.

Note

If you use the switch’s Authorized IP Managers and Management VLAN features, ensure that the SNMP management station and/or the choice of switch port used for SNMP access to the switch are compatible with the access controls enforced by these features. Otherwise, SNMP access to the switch will be blocked. For more on Authorized IP Managers, refer to the Access Security Guide on the Documentation CD-ROM shipped with your switch and also available on the ProCurve Networking web site. For information on the Management VLAN feature, refer to the section titled “The Secure Management VLAN” in the “Static Virtual LANs (VLANs)” chapter of the *Advanced Traffic Management Guide* for your switch.

SNMP Management Features

SNMP management features on the switch include:

- SNMP version 1, version 2c or version 3 over IP
- Security via configuration of SNMP communities (page 15-4)
- Security via authentication and privacy for SNMP Version 3 access
- Event reporting via SNMP
  - Version 1 traps
  - RMON: groups 1, 2, 3, and 9
- ProCurve Manager/Plus support
- Flow sampling using either EASE or sFlow
- Standard MIBs, such as the Bridge MIB (RFC 1493), Ethernet MAU MIB (RFC 1515), and others.

The switch SNMP agent also uses certain variables that are included in a Hewlett-Packard proprietary MIB (Management Information Base) file. If you are using HP OpenView, you can ensure that it is using the latest version of the MIB file by downloading the file to the OpenView database. To do so, go to the ProCurve Networking web site at:

www.procurve.com

Click on **software updates**, then **MIBs**.

Configuring for SNMP Access to the Switch

SNMP access requires an IP address and subnet mask configured on the switch. (See “IP Configuration” on page 8-2.) If you are using DHCP/Bootp to configure the switch, ensure that the DHCP/Bootp process provides the IP address. (See “DHCP/Bootp Operation” on page 8-12.)

Once an IP address has been configured, the main steps for configuring SNMP version 1 and version 2c access management features are:

1. Configure the appropriate SNMP communities. (Refer to “SNMPv3 Communities” on page 15-11.)
2. Configure the appropriate trap receivers. (Refer to “SNMPv3 Notification and Traps” on page 15-16.)

In some networks, authorized IP manager addresses are not used. In this case, all management stations using the correct community name may access the switch with the View and Access levels that have been set for that community.

If you want to restrict access to one or more specific nodes, you can use the switch's IP Authorized Manager feature. (Refer to the *Access Security Guide* for your switch.)

Caution

For ProCurve Manager (PCM) version 1.5 or earlier (or any TopTools version), deleting the "public" community disables some network management functions (such as traffic monitoring, SNMP trap generation, and threshold setting). If network management security is a concern, and you are using the above software versions, ProCurve recommends that you change the write access for the "public" community to "Restricted".

Configuring for SNMP Version 3 Access to the Switch

SNMP version 3 (SNMPv3) access requires an IP address and subnet mask configured on the switch. (See "IP Configuration" on page 8-2.) If you are using DHCP/Bootp to configure the switch, ensure that the DHCP/Bootp process provides the IP address. (See "DHCP/Bootp Operation" on page 8-12.)

Once an IP address has been configured, the main steps for configuring SNMP version 3 access management features are:

1. Enable SNMPv3 for operation on the switch (Refer to "SNMP Version 3 Commands" on page 15-6)
2. Configure the appropriate SNMP users (Refer to "SNMPv3 Users" on page 15-7)
3. Configure the appropriate SNMP communities. (Refer to "SNMPv3 Communities" on page 15-11.)
4. Configure the appropriate trap receivers. (Refer to "SNMPv3 Notification and Traps" on page 15-16.)

In some networks, authorized IP manager addresses are not used. In this case, all management stations using the correct User and community name may access the switch with the View and Access levels that have been set for that community. If you want to restrict access to one or more specific nodes, you can use the switch's IP Authorized Manager feature. (Refer to the *Access Security Guide* for your switch.)

SNMP Version 3 Commands

SNMP version 3 (SNMPv3) adds a new command to the CLI for configuring SNMPv3 functions. To enable SMNPv3 operation on the switch you must:

a. Enable SNMPv3 with the **snmpv3 enable** command. An initial user entry will be generated with MD5 authentication and DES privacy.

b. You may restrict access to only SNMPv3 agents with the **snmpv3 only** command. A second option would be to restrict write access to only SNMPv3 agents with the **snmpv3 restricted-access** command

Caution

Restricting access to only version 3 messages will make the community named "public" inaccessible to network management applications (such as auto-discovery, traffic monitoring, SNMP trap generation, and threshold setting) from operating in the switch.

Syntax: [no] snmpv3 enable

Enable and disable the switch for access from SNMPv3 agents. This includes the creation of the initial user record.

[no] snmpv3 only

Enables or disables restrictions to access from only SNMPv3 agents. When enabled, the switch will reject all non-SNMPv3 messages.

[no] snmpv3 restricted-access

Enables or disables restrictions from all non-SNMPv3 agents to read only access.

show snmpv3 enable

Displays the operating status of SNMPv3.

show snmpv3 only

Displays status of message reception of non-SNMPv3 messages.

show snmpv3 restricted-access

Displays status of write messages of non-SNMPv3 messages.

Enabling SNMPv3

The **snmpv3 enable** command starts a dialog that performs three functions: enabling the switch to receive SNMPv3 messages, configuring the initial users, and, optionally, to restrict non-version 3 messages to “read only”. Figure 15-1 shows an example of this dialog.

Note: SNMP Version 3 Initial Users

For most SNMPv3 management software to be able to create new users, they must have an initial user record clone. These records can be downgraded, given less features, but not upgraded with new features added. For this reason it is recommended that a second user with SHA and DES are created at the time you enable SNMPv3

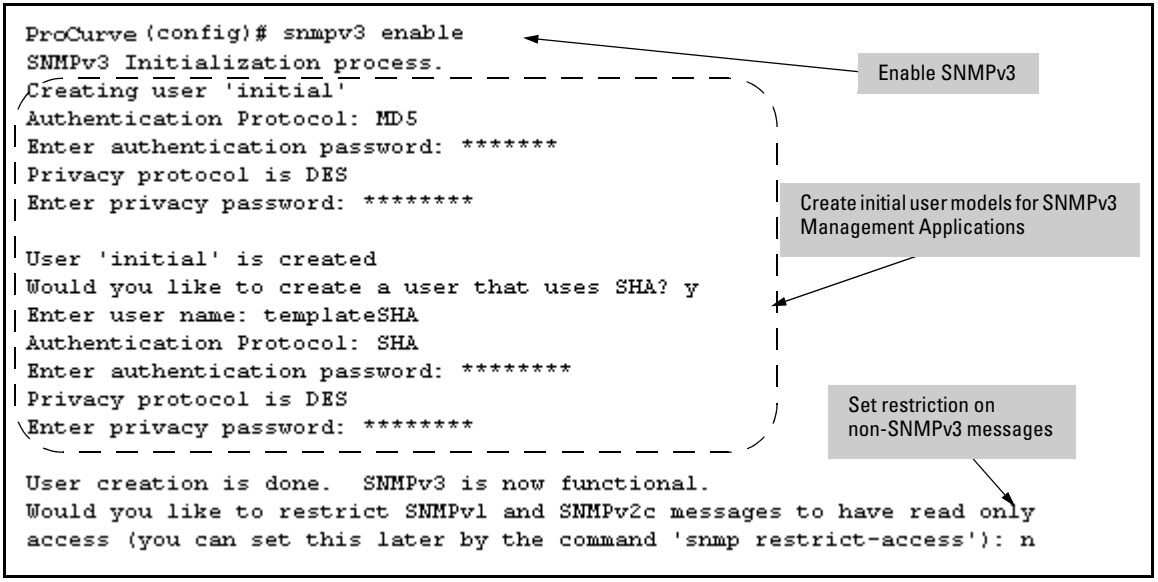

Figure 15-1. Example of SNMP version 3 Enable Command

SNMPv3 Users

The second step to use SNMPv3 on the switch is to configure the users that will be assigned to different groups. To establish users on the switch:

1. Add the users to the User Table. This is done with the **snmpv3 user** command. To view the users in the list you use the **show snmpv3 user** command. See “Adding Users” on page 15-8.

2. Assign users to Security Groups based on their security model. This is done with the **snmpv3 group** command. See“Assigning Users to Groups” on page 15-9.

Caution

Adding a user without authentication and/or privacy to a group that requires it, will cause the user to not be able to access the switch. You should only add users to the group that is appropriate for their security parameters

Adding Users. To establish a user you must first add the user names to the list of known users. Add user names with the **snmpv3 user** CLI command.

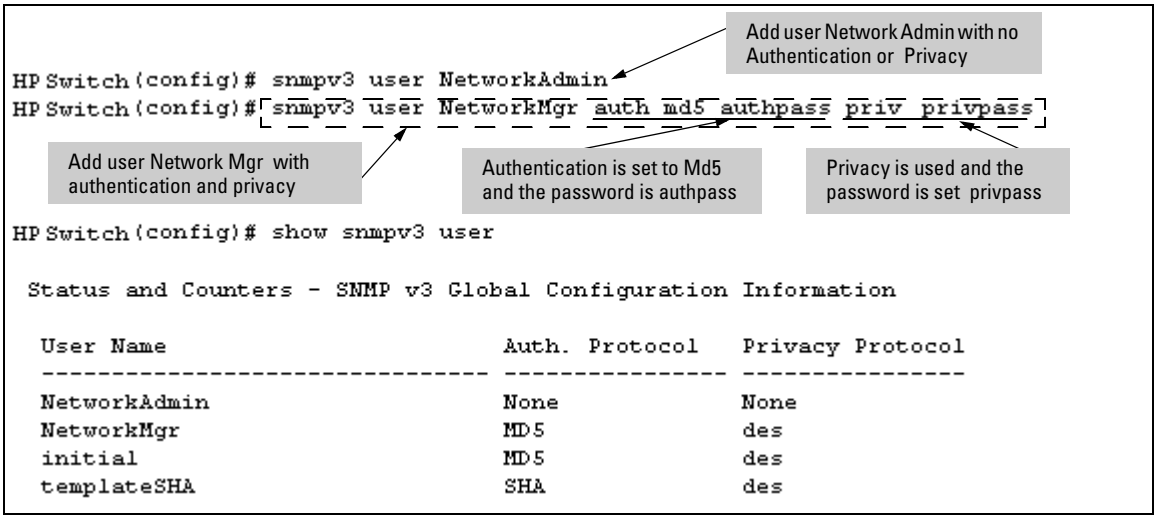

Figure 15-2. Adding and showing Users for SNMPv3

SNMPv3 Commands

Syntax: [no] snmpv3 user *<user_name>*

Adds or Deletes a user entry for snmpv3. Authorization and privacy are optional, but to use privacy, you must use authorization. When deleting a user, only the **user_name** *is required.*

[auth <md5 | sha> *<auth_pass>*]

With authorization, you can select either MD5 authentication or sha authentication. The auth_pass must be 6-32 characters in length and must be included when authentication is included. (Default: None)

[priv *<priv_pass>*]

With privacy, the switch only supports DES (56-bit) encryption. The privacy password **priv_pass** *must be 6-32 characters in length and must be included when using the* **priv** *parameter. (Default: None)*

Assigning Users to Groups. Then you must set the group access level for the user by assigning the user to a group. This is done with the **snmpv3 group** command. For more details on the MIBs access for a given group see "Group Access Levels" on page 15-10.

Add NetworkAdmin to operator noauth group

```
ProCurve (config)# snmpv3 group operatornoauth user NetworkAdmin sec-model ver3
ProCurve (config)# snmpv3 group managerpriv user NetworkMgr sec- model ver3
ProCurve (config)# show snmpv3 group

 Status and Counters - SNMP v3 Global Configuration Information

  Security Name                    Security Model Group Name
  ---------------------------------- -------------- --------------
  CommunityManagerReadOnly         ver1           ComManagerR
  CommunityManagerReadWrite        ver1           ComManagerRW
  CommunityOperatorReadOnly        ver1           ComOperatorRW
  CommunityOperatorReadWrite       ver1           ComOperatorRW
  CommunityManagerReadOnly         ver2c          ComManagerR
  CommunityManagerReadWrite        ver2c          ComManagerRW
  CommunityOperatorReadOnly        ver2c          ComOperatorRW
  CommunityOperatorReadWrite       ver2c          ComOperatorRW
  NetworkMgr                       ver3           ManagerPriv
  NetworkAdmin                     ver3           OperatorNoAuth
```

Add NetworkMgr to managerpriv group

Pre-assigned groups for access by Version 2c and version 1 management applications

Figure 15-3. Example of Assigning Users to Groups

SNMPv3 Group Commands

Syntax: [no] snmpv3 group

This command assigns or removes a user to a security group for access rights to the switch. To delete an entry, all of the following three parameters must be included in the command.

group *<group_name>*

This parameter identifies the group that has the privileges that will be assigned to the user. For more details see "Group Access Levels" on page 15-10.

user *<user_name>*

This parameter identifies the user to be added to the access group. This must match the user name added with the **snmpv3 user** *command.*

sec-model <ver1 | ver2c | ver3>

This defines which security model to use for the added user. A SNMPv3 access Group should only use the ver3 security model.

Group Access Levels

The switch supports eight predefined group access levels. There are four levels for use with version 3 users and four are used for access by version 2c or version 1 management applications.

Group Name	Group Access Type	Group Read View	Group Write View
managerpriv	Ver3 Must have Authentication and Privacy	ManagerReadView	ManagerWriteView
managerauth	Ver3 Must have Authentication	ManagerReadView	ManagerWriteView
operatorauth	Ver3 Must have Authentication	OperatorReadView	DiscoveryView
operatornoauth	Ver3 No Authentication	OperatorReadView	DiscoveryView
commanagerrw	Ver2c or Ver1	ManagerReadView	ManagerWriteView
commanagerr	Ver2c or Ver1	ManagerReadView	DiscoveryView
comoperatorrw	Ver2c or Ver1	OperatorReadView	OperatorReadView
comoperatorr	Ver2c or Ver1	OperatorReadView	DiscoveryView

Each view allows you to view or modify a different set of MIBs.

- **Manager Read View** – access to all managed objects
- **Manager Write View** – access to all managed objects *except* the following: vacmContextTable, vacmAccessTable, vacmViewTreeFamilyTable

- **OperatorReadView** – no access to icfSecurityMIB, hpSwitchIpTftp-Mode, vacmContextTable, vacmAccessTable, vacmViewTreeFamilyTable, usmUserTable, snmpCommunityTable
- **Discovery View** – Access limited to samplingProbe MIB.

Note

All access groups and views are predefined on the switch. There is no method to modify or add groups or views to those that are pre-defined on the switch.

SNMPv3 Communities

SNMP commuities are supported by the switch to allow management application that use version 2c or version 1 to access the switch. The communities are mapped to Group Access Levels that are used for version 2c or version 1 support. For more information see "Group Access Levels" on page 15-10. This mapping will happen automatically based on the communities access privileges, but special mappings can be added with the **snmpv3 community** command.

Syntax: [no] snmpv3 community

This command maps or removes a mapping of a community name to a group access level. To remove a mapping you, only need to specify the **index_name** *parameter.*

index *<index_name>*

This is an index number or title for the mapping. The values of 1-5 are reserved and can not be mapped.

name *<community_name>*

This is the community name that is being mapped to a group access level.

sec-name *<security_name>*

This is the group level that the community is being mapped. For more information see "Group Access Levels" on page 15-10.

tag *<tag_value>*

This is used to specify which target address may have access by way of this index reference.

Figure 15-4 shows the assigning of Operator community on MgrStation1 to the CommunityOperatorReadWrite group. Any other Operator only has an access level of CommunityOperatorReadOnly

Add mapping to allow write access for Operator community on MgrStation1

Two Operator Access Levels

```
ProCurve (config)# snmpv3 community index 30 name Operator sec-name
                    CommunityManagerReadWrite tag MgrStation1
ProCurve (config)# show snmpv3 community

 snmpCommunityTable [rfc2576]

  Index Name                  Community Name              Security Name
  ------------------------- -------------------------- --------------------------
  1                           public                      CommunityManagerReadWrite
  2                           Operator                    CommunityOperatorReadOnly
  3                           Manager                     CommunityManagerReadWrite
  30                          Operator                    CommunityManagerReadWrite
```

Figure 15-4. Assigning a Community to a Group Access Level

SNMP Community Features

Feature	Default	Menu	CLI	Web
show SNMP communities	n/a	page 15-13	page 15-14	—
configure identity information	none	—	page 15-15	
configure community names	public	page 15-13	page 15-15	—
MIB view for a community name (operator, manager)	manager	" "	" "	
write access for default community name	unrestricted	"	" "	

Use SNMP communities to restrict access to the switch by SNMP management stations by adding, editing, or deleting SNMP communities. You can configure up to five SNMP communities, each with either an operator-level or a manager-level view, and either restricted or unrestricted write access.

Using SNMP requires that the switch have an IP address and subnet mask compatible with your network.

Caution

For ProCurve Manager (PCM) version 1.5 or earlier (or any TopTools version), deleting the "public" community disables some network management functions (such as traffic monitoring, SNMP trap generation, and threshold setting). If network management security is a concern, and you are using the above software versions, ProCurve recommends that you change the write access for the "public" community to "Restricted".

Menu: Viewing and Configuring non-SNMP version 3 Communities

To View, Edit, or Add SNMP Communities:

1. From the Main Menu, Select:
   2. Switch Configuration...
      6. SNMP Community Names

Note: This screen gives an overview of the SNMP communities that are currently configured. All fields in this screen are read-only.

```
========================= CONSOLE - MANAGER MODE ============================
                    Switch Configuration - SNMP Communities

  Community Name   MIB View  Write Access
  ----------------  --------  ------------
  public            Manager   Unrestricted

 Actions->   Back    Add    Edit    Delete    Help

Return to previous screen.
Use up/down arrow keys to change record selection, left/right arrow keys to
change action selection, and <Enter> to execute action.
```

Add and Edit options are used to modify the SNMP options. See figure 8-2.

Figure 15-5. The SNMP Communities Screen (Default Values)

2. Press **[A]** (for **Add**) to display the following screen:

If you are adding a community, the fields in this screen are blank.

If you are editing an existing community, the values for the currently selected Community appear in the fields.

```
==========================- CONSOLE - MANAGER MODE -============================
                    Switch Configuration - SNMP Communities

  Community Name :
  MIB View : Manager                    Write Access : Restricted

 Actions->   Cancel     Edit     Save     Help

Enter Community Name - up to 16 characters, case sensitive; no spaces
Use arrow keys to change field selection, <Space> to toggle field choices,
and <Enter> to go to Actions.
```

Type the value for this field.

Use the Space bar to select values for other fields

Figure 15-6. The SNMP Add or Edit Screen

Need Help? If you need information on the options in each field, press **[Enter]** to move the cursor to the Actions line, then select the **Help** option on the Actions line. When you are finished with Help, press **[E]** (for Edit) to return the cursor to the parameter fields.

3. Enter the name you want in the Community Name field, and use the Space bar to select the appropriate value in each of the other fields. (Use the **[Tab]** key to move from one field to the next.)
4. Press **[Enter]**, then **[S]** (for **Save**).

CLI: Viewing and Configuring SNMP Community Names

Community Name Commands	Page
show snmp-server [<*community-string*>]	15-14
[no] snmp-server	15-15
[community <*community-str*>]	15-15
[host <*community-str*> <*ip-addr*>] [<none | debug | all | not-info | critical>]	15-20
[enable traps <authentication>	15-22

Listing Community Names and Values. This command lists the data for currently configured SNMP community names (along with trap receivers and the setting for authentication traps — see "SNMPv3 Notification and Traps" on page 15-16).

Syntax: show snmp-server [<*community-string*>]

This example lists the data for all communities in a switch; that is, both the default “public” community name and another community named "blue-team"

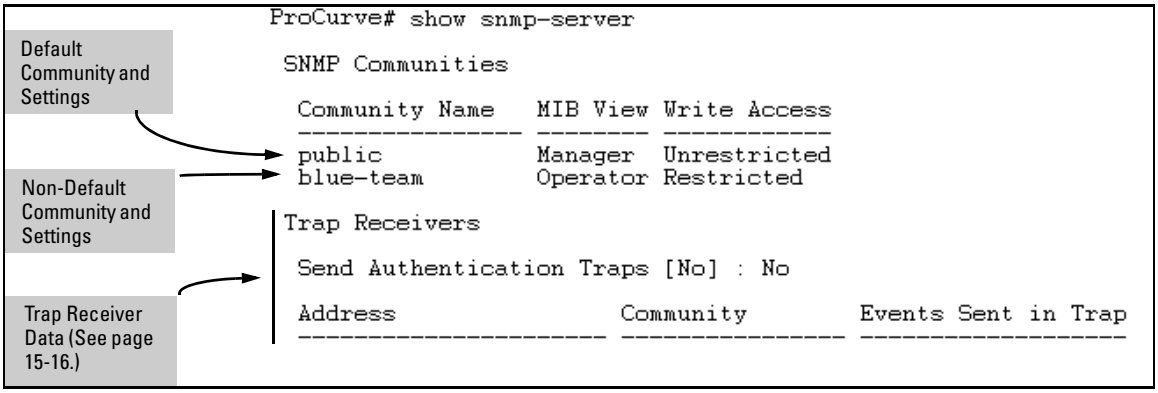

Figure 15-7. Example of the SNMP Community Listing with Two Communities

To list the data for only one community, such as the "public" community, use the above command with the community name included. For example:

```
ProCurve# show snmp-server public
```

Configuring Community Names and Values. The **snmp-server** command enables you to add SNMP communities with either default or specific access attributes, and to delete specific communities.

Syntax: [no] snmp-server community < *community-name* >

Configures a new community name. If you do not also specify **operator** *or* **manager**, *the switch automatically assigns the community to the* **operator** *MIB view. If you do not specify* **restricted** *or* **unrestricted**, *the switch automatically assigns the community to* **restricted** *(read-only) access. The* **no** *form uses only the* **< community-name >** *variable and deletes the named community from the switch.*

[operator | manager]

Optionally assigns an access level. At the **operator** *level the community can access all MIB objects except the CONFIG MIB. At the* **manager** *level the community can access all MIB objects.*

[restricted | unrestricted]

Optionally assigns MIB access type. Assigning the **restricted** *type allows the community to read MIB variables, but not to set them. Assigning the* **unrestricted** *type allows the community to read and set MIB variables.*

For example, to add the following communities:

Community	Access Level	Type of Access
red-team	manager *(Access to all MIB objects.)*	unrestricted *(read/write)*
blue-team	operator *(Access to all MIB objects except the CONFIG MIB.)*	restricted *(read-only)*

`ProCurve(`config)# snmp-server community red-team
manager unrestricted
`ProCurve`(config)# snmp-server community blue-team
operator restricted

To eliminate a previously configured community named "gold-team":

```
ProCurve(config) # no snmp-server community gold-team
```

SNMPv3 Notification and Traps

The switches covered by this manual support the SNMPv3 notification process. They also support version 1 or version 2c traps. For more information on version 1 or version2c traps, see “SNMPv1 and SNMPv2c Trap Features” on page 15-19. The SNMPv3 notification process allows for the messages passed to be authenticated and encrypted if you choose. To set up a SNMPv3 notification there are three steps:

1. Establish a Notification with the **snmpv3 notify** command
2. Point the notification to an Address with the **snmpv3 targetaddress** command.
3. Establish a parameter record for the target address with the **snmpv3 params** command.

Syntax: [no] snmpv3 notify <*notify_name*> tag <*tag_name*>

This adds or deletes a notification request. To remove a mapping you only need the ***< notify_name >****.*

[no] snmpv3 targetaddress < *name* > taglist < *tag* > params < *parms_name* > < *ip-addr* >

Add or delete an address where notification messages are sent. The < ***tag >*** *value must match the tag value of a notify entry.*

Note*:* You are only allowed up to 103 characters for the **taglist** value.

filter < none | debug | all | not-info | critical>

This filters messages to restrict the types of messages transmitted to an address. (Default: **none***)*

udp-port < *port* >

This specifies the UDP port to use. (*Default:* **162***)*

port-mask < *mask* >

Used to specific a range of UDP ports. (Default: **0***)*

addr-mask < *mask* >

Used to specify a range of addresses as destinations for notify messages. (Default: **0***)*

retries < *value* >

Number of times to retransmit a message when no response is reviewed. (Default: **3***)*

timeout < *value* >

Specifies how long the switch waits for a response from the target before it retransmits the packet. (Default: **1500***)*

max-msg-size<*size*> **Default:**1472

Specifies the maximum number of bytes a message to this target can contain.

[no] snmpv3 params *<params_name>* user *<user_name>*

Adds or deletes a user parameter for use with target address. The **params_name** *must match the* **parms_name** *in the* **targetaddress** *command. The* **user_name** *should be a user from the User Table. For more information on users see "SNMPv3 Users" on page 15-7.*

A complete **params** *command must also have a* **sec-model** *and* **msg-processing** *entry.*

< sec-model < ver1 | ver2c | ver3 >

This established the security model to use for messages passed to the **targetaddress**. *If you use* **ver3** *then* **msg-processing** *must also be* **ver3**.

< msg-processing < ver1 | ver2c | ver3 > [noaut | auth | priv]

Establishes the **msg-processing** *algorithm for messages passed to the target address. If* **ver3** *is used and* **sec-model** *is* **ver3** *then you must select a security services level (***noauth**, **auth**, *or* **priv***).*

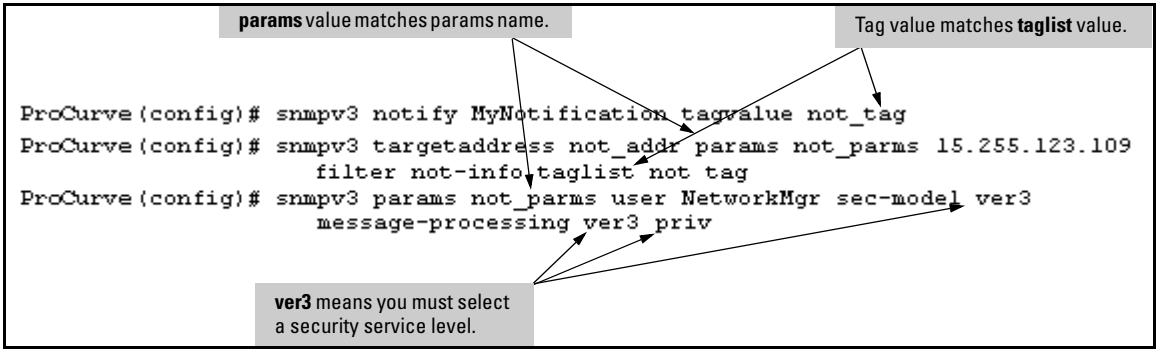

Figure 15-8. Example of SNMP Notification and Trap Configuration

SNMPv1 and SNMPv2c Trap Features

Feature	Default	Menu	CLI	Web
snmp-server host (trap receiver)	public	—	page 15-20	—
snmp-server enable (authentication trap)	none	—	page 15-22	—

A *trap receiver* is a management station designated by the switch to receive SNMP traps sent from the switch. An *authentication trap* is a specialized SNMP trap sent to trap receivers when an unauthorized management station tries to access the switch.

Note

Fixed or "Well-Known" Traps: The Series 5300xl switches automatically sends fixed traps (such as "coldStart", "warmStart", "linkDown", and "linkUp") to trap receivers using the **public** community name. These traps cannot be redirected to other communities. Thus, if you change or delete the default **public** community name, these traps will be lost.

Thresholds: The switch automatically sends all messages resulting from thresholds to the network management station(s) that set the thresholds, regardless of the trap receiver configuration.

In the default configuration, there are no trap receivers configured, and the authentication trap feature is disabled. From the CLI you can configure up to ten SNMP trap receivers to receive SNMP traps from the switch. As an option, you can also configure the switch to send Event Log messages as traps.

CLI: Configuring and Displaying Trap Receivers

Trap Receiver Commands	Page
show snmp-server	15-20
snmp-server host *<ip-addr> <community-name>* [none | all | non-info| critical | debug]	15-20
snmp-server enable traps authentication	15-20

Using the CLI To List Current SNMP Trap Receivers.

This command lists the currently configured trap receivers and the setting for authentication traps (along with the current SNMP community name data — see "SNMPv3 Communities" on page 15-11).

Syntax: show snmp-server

Displays current community and trap receiver data.

In the next example, the **show snmp-server** command shows that the switch has been previously configured to send SNMP traps to management stations belonging to the "public", "red-team", and "blue-team" communities.

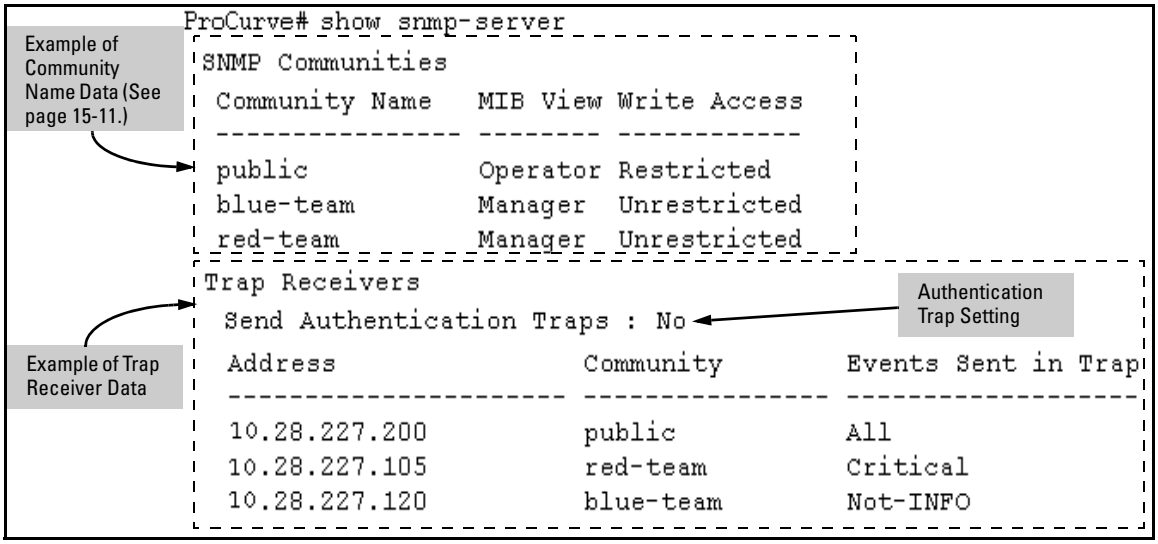


```
ProCurve# show snmp-server

SNMP Communities
 Community Name   MIB View Write Access
 ---------------- -------- ------------
 public           Operator Restricted
 blue-team        Manager  Unrestricted
 red-team         Manager  Unrestricted

Trap Receivers
 Send Authentication Traps : No

 Address                 Community        Events Sent in Trap
 ----------------------- ---------------- -------------------
 10.28.227.200           public           All
 10.28.227.105           red-team         Critical
 10.28.227.120           blue-team        Not-INFO
```

Figure 15-9. Example of Show SNMP-Server Listing

Configuring Trap Receivers. This command specifies trap receivers by community membership, management station IP address, and the type of Event Log messages to send to the trap receiver.

Note

If you specify a community name that does not exist—that is, has not yet been configured on the switch—the switch still accepts the trap receiver assignment. However, no traps will be sent to that trap receiver until the community to which it belongs has been configured on the switch.

Syntax: snmp-server host < *community-string* > < *ip-address* >

Using community name and destination IP address, this command designates a destination network-management station for receiving SNMP event log messages from the switch. If you do not specify the event level, then the switch does not send event log messages as traps. You can specify up to 10 trap receivers (network management stations).

Note: In all cases, the switch sends any threshold trap(s) to the network management station(s) that explicitly set the threshold(s).

[<none | all | non-info | critical | debug>]

Options for sending switch Event Log messages to a trap receiver. Refer toTable 15-1, “Options for Sending Event Log Messages as Traps,” on page 15-21. The levels specified with these options apply only to Event Log messages, and not to threshold traps.

Table 15-1. Options for Sending Event Log Messages as Traps

Event Level	Description
None (default)	Send no log messages.
All	Send all log messages.
Not INFO	Send the log messages that are not information-only.
Critical	Send critical-level log messages.
Debug	Reserved for ProCurve-internal use.

For example, to configure a trap receiver in a community named "red-team" with an IP address of 10.28.227.130 to receive only "critical" log messages:

```
ProCurve(config)# snmp-server trap-receiver red-team
   10.28.227.130 critical
```

Notes

To replace one community name with another for the same IP address, you must use **no snmp-server host < community-name> < ip-address >** to delete the unwanted community name. Otherwise, adding a new community name with an IP address already in use with another community name simply creates two allowable community name entries for the same management station.

If you do not specify the event level ([<none | all | non-info | critical | debug>]) then the switch does not send event log messages as traps. "Well-Known" traps and threshold traps (if configured) will still be sent.

Using the CLI To Enable Authentication Traps

Note

For this feature to operate, one or more trap receivers must be configured on the switch. See “Configuring Trap Receivers” on page 15-20.

Using the CLI To Enable Authentication Traps.

Syntax: [no] snmp-server enable traps authentication

Enables or disables sending an authentication trap to the configured trap receiver(s) if an unauthorized management station attempts to access the switch.

For example:

```
ProCurve(config)# snmp-server enable traps authentication
```

Check the Event Log in the console interface to help determine why the authentication trap was sent. (Refer to “Using the Event Log To Identify Problem Sources” on page C-27.)

Advanced Management: RMON

The switch supports RMON (Remote Monitoring) on all connected network segments. This allows for troubleshooting and optimizing your network.

The following RMON groups are supported:

- Ethernet Statistics (except the numbers of packets of different frame sizes)
- Alarm
- History (of the supported Ethernet statistics)
- Event

The RMON agent automatically runs in the switch. Use the RMON management station on your network to enable or disable specific RMON traps and events. Note that you can access the Ethernet statistics, Alarm, and Event groups from the ProCurve Manager network management software. For more on ProCurve Manager, visit the ProCurve Networking web site at

www.procurve.com

Click on **products index**, then look for the ProCurve Manager topic under the **Network Manager** bar.

LLDP (Link-Layer Discovery Protocol)

To standardize device discovery on all ProCurve switches, LLDP will be implemented while offering limited read-only support for CDP as documented in this manual. For current information on your switch model, consult the Release Notes (available on the ProCurve Networking web site). If LLDP has not yet been implemented (or if you are running an older version of software), consult a previous version of the Management and Configuration Guide for device discovery details.

Note

LLDP-Med features are supported on the Series 5300xl and 4200vl switches.

Table 15-2. LLDP and LLDP-MED Features

Feature	Default	Menu	CLI	Web
View the switch's LLDP configuration	n/a	—	page 15-33	—
Enable or disable LLDP on the switch	Enabled	—	page 15-28	—
Change the transmit interval (refresh-interval) for LLDP packets	30 seconds	—	page 15-38	—
Change the holdtime multiplier for LLDP Packets (holdtime-multiplier x refresh-interval = time-to-live)	4 seconds	—	page 15-28	—
Change the delay interval between advertisements	2 seconds	—	page 15-39	—
Changing the reinitialization delay interval	2 seconds	—	page 15-40	—
Configuring SNMP notification support	Disabled	—	page 15-41	—
Configuring transmit and receive modes	tx_rx	—	page 15-42	—
Configuring basic LLDP per-port advertisement content	Enabled	—	page 15-43	—
Configuring port speed and duplex advertisements for optional LLDP and mandatory LLDP-MED applications	Enabled	—	page 15-65	—
Configuring topology change notification for LLDP-MED	Enable	—	page 15-71	—
Changing the fast-start duration for LLDP-MED	5 sec	—	page 15-51	
Configuring LLDP-MED Advertising	Enabled	—	page 15-43	
Configuring LLDP-MED device location data	None	—	page 15-63	
Displaying Advertisement Data and Statistics	n/a	—	page 15-68	—

LLDP (Link Layer Discovery Protocol): provides a standards-based method for enabling the switches covered by this guide to advertise themselves to adjacent devices and to learn about adjacent LLDP devices.

LLDP-MED (LLDP Media Endpoint Discovery): Provides an extension to LLDP and is designed to support VoIP deployments.

Note

LLDP-MED is an extension for LLDP, and the switch requires that LLDP be enabled as a prerequisite to LLDP-MED operation. As of October, 2005, LLDP-MED operates on 5300xl and 4200vl switches. This feature is not currently offered on the 3400cl and 6400cl switches.

An SNMP utility can progressively discover LLDP devices in a network by:

1. Reading a given device's Neighbors table (in the Management Information Base, or MIB) to learn about other, neighboring LLDP devices.
2. Using the information learned in step 1 to find and read the neighbor devices' Neighbors tables to learn about additional devices, and so on.

Also, by using **show** commands to access the switch's neighbor database for information collected by an individual switch, system administrators can learn about other devices connected to the switch, including device type (capability) and some configuration information. In VoIP deployments using LLDP-MED on the 5300xl or 4200vl switches, additional support unique to VoIP applications is also available. Refer to "LLDP-MED (Media-Endpoint-Discovery) for the 5300xl and 4200vl Switches" on page 15-47.

Terminology

Adjacent Device: Refer to "Neighbor or Neighbor Device".

Advertisement: See LLDPDU.

Active Port: A port linked to another active device (regardless of whether STP is blocking the link).

ELIN (Emergency Location Identification Number): A valid telephone number in the North American Numbering Plan format and assigned to a multiline telephone system operator by the appropriate authority. This number calls a public service answering point (PSAP) and relays automatic location identification data to the PSAP.

LLDP: Link Layer Discovery Protocol:

- 5300xl, 4200vl, and 6400cl Switches: IEEE 802.1AB
- 3400cl Switches: IEEE 802.1AB/D9 or greater

LLDP-Aware: A device that has LLDP in its operating code, regardless of whether LLDP is enabled or disabled.

LLDP Device: A switch, server, router, or other device running LLDP.

LLDP Neighbor: An LLDP device that is either directly connected to another LLDP device or connected to that device by another, non-LLDP Layer 2 device (such as a hub) Note that an 802.1D-compliant switch does not forward LLDP data packets even if it is not LLDP-aware.

LLDPDU (LLDP Data Unit): LLDP data packet are transmitted on active links and include multiple TLVs containing global and per-port switch information. In this guide, LLDPDUs are termed “advertisements” or “packets”.

LLDP-MED (Link Layer Discover Protocol Media Endpoint Discovery): The TIA telecommunications standard produced by engineering subcommittee TR41.4, “VoIP Systems — IP Telephony infrastructure and Endpoints” to address needs related to deploying VoIP equipment in IEEE 802-based environments. This standard will be published as ANSI/TIA-1057.

MIB (Management Information Base): An internal database the switch maintains for configuration and performance information.

MLTS (Multiline Telephone System): A network-based and/or premises-based telephone system having a common interface with the public switched telephone system and having multiple telephone lines, common control units, multiple telephone sets, and control hardware and software.

NANP (North American Numbering Plan): A ten-digit telephone number format where the first three digits are an area code and the last seven-digits are a local telephone number.

Neighbor: See “LLDP Neighbor”.

Non-LLDP Device: A device that is not capable of LLDP operation.

PD (Powered Device): This is an IEEE 802.3af-compliant device that receives its power through a direct connection to a 10/100Base-TX PoE RJ-45 port in a ProCurve fixed-port or chassis-based switch. Examples of PDs include Voice-over-IP (VoIP) telephones, wireless access points, and remote video cameras.

PSAP (Public Safety Answering Point): PSAPs are typically emergency telephone facilities established as a first point to receive emergency (911) calls and to dispatch emergency response services such as police, fire and emergency medical services.

PSE (Power-Sourcing Equipment): A PSE, such as a PoE module installed in a Series 5300xl switch, provides power to IEEE 802.3af-compliant PDs directly connected to the ports on the module.

TLV (Type-Length-Value): A data unit that includes a data type field, a data unit length field (in bytes), and a field containing the actual data the unit is designed to carry (as an alphanumeric string, a bitmap, or a subgroup of information). Some TLVs include subelements that occur as separate data points in displays of information maintained by the switch for LLDP advertisements. (That is, some TLVs include multiple data points or subelements.)

General LLDP Operation

An LLDP packet contains data about the transmitting switch and port. The switch advertises itself to adjacent (neighbor) devices by transmitting LLDP data packets out all ports on which outbound LLDP is enabled, and reading LLDP advertisements from neighbor devices on ports that are inbound LLDP-enabled. (LLDP is a one-way protocol and does not include any acknowledgement mechanism.) An LLDP-enabled port receiving LLDP packets inbound from neighbor devices stores the packet data in a Neighbor database (MIB).

LLDP-MED

This capability is an extension to LLDP and is available on 5300xl switches running software release E.10.02 or greater, and on 4200vl switches. Refer to "LLDP-MED (Media-Endpoint-Discovery) for the 5300xl and 4200vl Switches" on page 15-47.

Packet Boundaries in a Network Topology

- Where multiple LLDP devices are directly connected, an outbound LLDP packet travels only to the next LLDP device. An LLDP-capable device does not forward LLDP packets to any other devices, regardless of whether they are LLDP-enabled.

- An intervening hub or repeater forwards the LLDP packets it receives in the same manner as any other multicast packets it receives. Thus, two LLDP switches joined by a hub or repeater handle LLDP traffic in the same way that they would if directly connected.
- Any intervening 802.1D device or Layer-3 device that is either LLDP-unaware or has disabled LLDP operation drops the packet.

Configuration Options

Enable or Disable LLDP on the Switch. In the default configuration, LLDP is globally enabled on the switch. To prevent transmission or receipt of LLDP traffic, you can disable LLDP operation (page 15-28)

Enable or Disable LLDP-MED on 5300xl or 4200vl Switches. In the default configuration for 5300xl switches running software release E.10.02 or greater or 4200vl switches, LLDP-MED is enabled by default. (Requires that LLDP is also enabled.) For more information, refer to "LLDP-MED (Media-Endpoint-Discovery) for the 5300xl and 4200vl Switches" on page 15-47.

Change the Frequency of LLDP Packet Transmission to Neighbor Devices. On a global basis, you can increase or decrease the frequency of outbound LLDP advertisements (page 15-28).

Change the Time-To-Live for LLDP Packets Sent to Neighbors. On a global basis, you can increase or decrease the time that the information in an LLDP packet outbound from the switch will be maintained in a neighbor LLDP device (page 15-28).

Transmit and Receive Mode. With LLDP enabled, the switch periodically transmits an LLDP advertisement (packet) out each active port enabled for outbound LLDP transmissions, and receives LLDP advertisements on each active port enabled to receive LLDP traffic (page 15-42). Per-Port configuration options include four modes:

- Transmit and Receive (**tx_rx**): This is the default setting on all ports. It enables a given port to both transmit and receive LLDP packets, and to store the data from received (inbound) LLDP packets in the switch's MIB.
- Transmit only (**txonly**): This setting enables a port to transmit LLDP packets that can be read by LLDP neighbors. However, the port drops inbound LLDP packets from LLDP neighbors without reading them. This prevents the switch from learning about LLDP neighbors on that port.

- Receive only (**rxonly**): This setting enables a port to receive and read LLDP packets from LLDP neighbors, and to store the packet data in the switch's MIB. However, the port does not transmit outbound LLDP packets. This prevents LLDP neighbors from learning about the switch through that port.
- Disable (**disable**): This setting disables LLDP packet transmissions and reception on a port. In this state, the switch does not use the port for either learning about LLDP neighbors or informing LLDP neighbors of its presence.

SNMP Notification. You can enable the switch to send a notification to any configured SNMP trap receiver(s) when the switch detects a remote LLDP data change on an LLDP-enabled port (page 15-41).

Per-Port (Outbound) Data Options. The following table lists the information the switch can include in the per-port, outbound LLDP packets it generates. In the default configuration, all outbound LLDP packets include this information in the TLVs transmitted to neighbor devices. However, you can configure LLDP advertisements on a per-port basis to omit some of this information (page 15-43).

Table 15-3. Data Available for Basic LLDP Advertisements

Data Type	Configuration Options	Default	Description
Time-to-Live	See note 1.	120 Seconds	The length of time an LLDP neighbor retains the advertised data before discarding it.
Chassis Type[2, 6]	N/A	Always Enabled	Indicates the type of identifier used for Chassis ID.
Chassis ID[6]	N/A	Always Enabled	Uses base MAC address of the switch.
Port Type[3, 6]	N/A	Always Enabled	Uses "Local", meaning assigned locally by LLDP.
Port Id[6]	N/A	Always Enabled	Uses port number of the physical port. In the 5300xl switches, this is an internal number reflecting the reserved slot/port position in the chassis. For more information on this numbering scheme, refer to figures D-2 and D-3 in Appendix D, "MAC Address Management" of the *Management and Configuration Guide* for your switch.
Remote Management Address			
Type[4, 6]	N/A	Always Enabled	Shows the network address type.
Address[4]	Default or Configured	Uses a default address selection method unless an optional address is configured. See "Remote Management Address", below.	
System Name[6]	Enable/Disable	Enabled	Uses the switch's assigned name.

Data Type	Configuration Options	Default	Description
System Description[6]	Enable/Disable	Enabled	Includes switch model name and running software version, and ROM version.
Port Description[6]	Enable/Disable	Enabled	Uses the physical port identifier.
System capabilities supported[5, 6]	Enable/Disable	Enabled	Identifies the switch's primary capabilities (bridge, router).
System capabilities enabled[5, 6]	Enable/Disable	Enabled	Identifies the primary switch functions that are enabled, such as routing.

[1]The Packet Time-to-Live value is included in LLDP data packets. (Refer to "Changing the Time-to-Live for Transmitted Advertisements" on page 15-38.)
[2]Subelement of the Chassis ID TLV.
[3]Subelement of the Port ID TLV.
[4]Subelement of the Remote-Management-Address TLV.
[5]Subelement of the System Capability TLV.
[6]Populated with data captured internally by the switch. For more on these data types, refer to the IEEE P802.1AB Standard.

Remote Management Address. The switch always includes an IP address in its LLDP advertisements. This can be either an address selected by a default process, or an address configured for inclusion in advertisements. Refer to "IP Address Advertisements" on page 15-31.

Debug Logging. You can enable LLDP debug logging to a configured debug destination (Syslog server and/or a terminal device) by executing the **debug lldp** command. (For more on Debug and Syslog, refer to the Troubleshooting appendix in the *Management and Configuration Guide* for your switch.) Note that the switch's Event Log does not record usual LLDP update messages.

Options for Reading LLDP Information Collected by the Switch

You can extract LLDP information from the switch to identify adjacent LLDP devices. Options include:

- Using the switch's **show lldp info** command options to display data collected on adjacent LLDP devices—as well as the local data the switch is transmitting to adjacent LLDP devices (page 15-33).

- Using an SNMP application that is designed to query the Neighbors MIB for LLDP data to use in device discovery and topology mapping. (In the 3400cl and 6400cl switches only.)
- Using the **walkmib** command to display a listing of the LLDP MIB objects

LLDP and LLDP-MED Standards Compatibility

The operation covered by this section is compatible with these standards:

- IEEE P802.1AB/D9 (Series 3400cl switches)
- IEEE P802.1AB (Series 5300xl, Series 4200vl, and Series 6400cl switches)
- RFC 2922 (PTOPO, or Physical Topology MIB)
- RFC 2737 (Entity MIB)
- RFC 2863 (Interfaces MIB)
- ANSI/TIA-1057/D6 (LLDP-MED; refer to "LLDP-MED (Media-Endpoint-Discovery) for the 5300xl and 4200vl Switches" on page 15-47.)

LLDP Operating Rules

(For additional information specific to LLDP-MED operation, refer to "LLDP-MED (Media-Endpoint-Discovery) for the 5300xl and 4200vl Switches" on page 15-47.)

Port Trunking. LLDP manages trunked ports individually. That is, trunked ports are configured individually for LLDP operation, in the same manner as non-trunked ports. Also, LLDP sends separate advertisements on each port in a trunk, and not on a per-trunk basis. Similarly, LLDP data received through trunked ports is stored individually, per-port.

IP Address Advertisements. In the default operation, if a port belongs to only one static VLAN, then the port advertises the lowest-order IP address configured on that VLAN. If a port belongs to multiple VLANs, then the port advertises the lowest-order IP address configured on the VLAN with the lowest VID. If the qualifying VLAN does not have an IP address, the port advertises 127.0.0.1 as its IP address. For example, if the port is a member of the default VLAN (VID = 1), and there is an IP address configured for the default VLAN, then the port advertises this IP address. In the default operation, the IP address that LLDP uses can be an address acquired by DHCP or Bootp.

You can override the default operation by configuring the port to advertise any IP address that is manually configured on the switch, even if the port does not belong to the VLAN configured with the selected IP address (page 15-43). (Note that LLDP cannot be configured through the CLI to advertise an addresses acquired through DHCP or Bootp. However, as mentioned above, in the default LLDP configuration, if the lowest-order IP address on the VLAN with the lowest VID for a given port is a DHCP or Bootp address, then the switch includes this address in its LLDP advertisements unless another address is configured for advertisements on that port.) Also, although LLDP allows configuring multiple remote management addresses on a port, only the lowest-order address configured on the port will be included in outbound advertisements. Attempting to use the CLI to configure LLDP with an IP address that is either not configured on a VLAN, or has been acquired by DHCP or Bootp results in the following error message.

```
xxx.xxx.xxx.xxx: This IP address is not configured or is
a DHCP address.
```

Spanning-Tree Blocking. Spanning tree does not prevent LLDP packet transmission or receipt on STP-blocked links.

802.1x Blocking. Ports blocked by 802.1x operation do not allow transmission or receipt of LLDP packets.

Data Management on the 3400cl/6400cl Switches. For information on how these switches manage LLDP data read from other devices, refer to “LLDP Data Management on the Series 3400cl and 6400cl Switches” on page 15-32.

LLDP Data Management on the Series 3400cl and 6400cl Switches

This section applies only to the Series 3400cl and 6400cl switches.

LLDP (Link-Layer Discovery Protocol) operation on the 3400cl and 6400cl switches includes transmitting LLDP packets to neighbor devices and reading LLDP packets received from neighbor devices.) This section describes points to note regarding LLDP data received by a 3400cl or 6400cl switch from other devices.

LLDP Neighbor Data

With LLDP enabled on a switch port, the port can read LLDP advertisements, and stores the data from the advertisements in its neighbor database. If the switch receives LLDP advertisements on the same port from the same

neighbor, it stores this information as two separate entries if the advertisements have differences chassis ID and port ID information. However, if the chassis and port ID information are the same, the switch stores this information as a single entry.

LLDP data transmission/collection is enabled in the switch's default configuration. In this state, an SNMP network management application designed to discover devices running LLDP can retrieve neighbor information from the switch.

Table 15-4. 3400cl/6400cl Neighbor Data Management

Protocol State	Packet Generation	Inbound Data Management	Inbound Packet Forwarding
LLDP Enabled[1]	Generates and transmits LLDP packets out all ports on the switch.	Store inbound LLDP data.	No forwarding of inbound LLDP packets.
LLDP Disabled	No packet generation.	No storage of LLDP data from neighbor devices.	No forwarding of inbound LLDP packets.

[1] LLDP transmit/receive are enabled in the default configuration of 3400cl and 6400cl switches.

Configuring LLDP Operation

In the default configuration, LLDP is enabled and in both transmit and receive mode on all active ports. The LLDP configuration includes global settings that apply to all active ports on the switch, and per-port settings that affect only the operation of the specified ports.

The commands in this section affect both LLDP and LLDP-MED operation. for information on operation and configuration unique to LLDP-MED, refer to "LLDP-MED (Media-Endpoint-Discovery) for the 5300xl and 4200vl Switches" on page 15-47.

Command	Page
show lldp config	15-36
[no] lldp run	15-37
lldp refresh-interval	15-38
lldp holdtime-multiplier	15-38
lldpTxDelay	15-39
lldpReinitDelay	15-40

Command	Page
lldp enable-notification	15-41
lldpnotificationinterval	15-42
lldp admin-status < txonly | rxonly | tx_rx | disable >	15-42
lldp config < *port-list* > IpAddrEnable	15-43
lldp config < *port-list* > basicTlvEnable	15-44
lldp config < *port-list* > dot3TlvEnable < macphy_config >	15-46

Viewing the Current Configuration

Displaying the Global LLDP, Port Admin, and SNMP Notification Status. This command displays the switch's general LLDP configuration status, including some per-port information affecting advertisement traffic and trap notifications.

Syntax show lldp config

Displays the LLDP global configuration, LLDP port status, and SNMP notification status. For information on port admin status, refer to "Configuring Per-Port Transmit and Receive Modes" on page 15-42.

For example, **show lldp config** produces the following display when the switch is in the default LLDP configuration:

```
ProCurve(config)# show lldp config

 LLDP Global Configuation

  LLDP Enabled [Yes] : Yes
  LLDP Transmit Interval    [30] : 30
  LLDP Hold time Multiplier [4] : 4
  LLDP Delay Interval       [2] : 2
  LLDP Reinit Interval      [2] : 2
  LLDP Notification Interval [5] : 5


 LLDP Port Configuration

  Port  | AdminStatus NotificationEnabled
  ----- + ----------- -------------------
  1     | Tx_Rx       False
  2     | Tx_Rx       False
  3     | Tx_Rx       False
  4     | Tx_Rx       False
  5     | Tx_Rx       False
  6     | Tx_Rx       False
  7     | Tx_Rx       False
  8     | Tx_Rx       False
  .       .           .
  .       .           .
```

Note: This value corresponds to the lldp refresh-interval command (page 15-38).

These LLDP-MED fields apply to 5300xl switches running software release E.10.xx or greater, and to 4200vl switches.

```
Med Topology Trap Enabled
-------------------------
False
True
False
False
True
False
False
```

Figure 15-10. Example of Viewing the General LLDP Configuration

Displaying Port Configuration Details. This command displays the port-specific configuration.

Syntax show lldp config < *port-list* >

Displays the LLDP port-specific configuration for all ports in < *port-list*>, *including which optional TLVs and any non-default IP address that are included in the port's outbound advertisements. For information on the notification setting, refer to "Configuring SNMP Notification Support" on page 15-41. For information on the other configurable settings displayed by this command, refer to "Configuring Per-Port Transmit and Receive Modes" on page 15-42.*

```
ProCurve(config)# show lldp config 3

 LLDP Port Configuration Detail

  Port : 3
  AdminStatus [Tx_Rx] : Tx_Rx
  NotificationEnabled [False] : False

  TLVS Advertised:
   * port_descr
   * system_name
   * system_descr
   * system_cap

  IpAddress Advertised:
```

The blank IpAddress field indicates that the default IP address will be advertised from this port. (Refer to page 15-43: "Configuring a Remote Management Address for Outbound LLDP Advertisements"

Figure 15-11. Example of Per-Port Configuration Display (3400cl/6400cl Switches)

```
ProCurve(config)# show lldp config a1

 LLDP Port Configuration Detail

  Port : a1
  AdminStatus [Tx_Rx] : Tx_Rx
  NotificationEnabled [False] : False
  Med Topology Trap Enabled [False] : False


  TLVS Advertised:
   * port_descr
   * system_name
   * system_descr
   * system_cap
   * capabilities
   * network_policy
   * location_id
   * poe
   * macphy_config

  IpAddress Advertised:
```

These fields appear when medtlvenable is enabled on the switch, which is the default setting.

This field appears when dot3tlvenable is enabled on the switch, which is the default setting.

The blank IpAddress field indicates that the default IP address will be advertised from this port. (Refer to page 15-43: "Configuring a Remote Management Address for Outbound LLDP Advertisements"

Figure 15-12. Example of Per-Port Configuration Display (5300xl with Software Release E.10.x or Greater)

Configuring Global LLDP Packet Controls

The commands in this section configure the aspects of LLDP operation that apply the same to all ports in the switch.

Enabling or Disabling LLDP Operation on the Switch. Enabling LLDP operation (the default) causes the switch to:

- Use active, LLDP-enabled ports to transmit LLDP packets describing itself to neighbor devices.
- Add entries to its neighbors table based on data read from incoming LLDP advertisements.

Syntax [no] lldp run

Enables or disables LLDP operation on the switch. The **no** *form of the command, regardless of individual LLDP port configurations, prevents the switch from transmitting outbound LLDP advertisements, and causes the switch to drop all LLDP advertisements received from other devices. The switch preserves the current LLDP configuration when LLDP is disabled. After LLDP is disabled, the information in the LLDP neighbors database remains until it times-out. (Default: Enabled)*

For example, to disable LLDP on the switch:

```
ProCurve(config)# no lldp run
```

Changing the Packet Transmission Interval. This interval controls how often active ports retransmit advertisements to their neighbors.

Syntax lldp refresh-interval < 5 - 32768 >

Changes the interval between consecutive transmissions of LLDP advertisements on any given port. (Default: 30 seconds)

Note: *The* **refresh-interval** *must be greater than or equal to (4 x* **delay-interval***). (The default* **delay-interval** *is 2). For example, with the default* **delay-interval***, the lowest* **refresh-interval** *you can use is 8 seconds (4 x 2 = 8). Thus, if you want a* **refresh-interval** *of 5 seconds, you must first change the delay interval to 1 (that is, 4 x 1 < 5). If you want to change the* **delay-interval***, use the* **setmib** *command.*

Changing the Time-to-Live for Transmitted Advertisements. The Time-to-Live value (in seconds) for all LLDP advertisements transmitted from a switch is controlled by the switch that generates the advertisement, and determines how long an LLDP neighbor retains the advertised data before

discarding it. The Time-to-Live value is the result of multiplying the **refresh-interval** by the **holdtime-multiplier** described below.

Syntax lldp holdtime-multiplier < 2 - 10 >

Changes the multiplier an LLDP switch uses to calculate the Time-to-Live for the LLDP advertisements it generates and transmits to LLDP neighbors. When the Time-to-Live for a given advertisement expires the advertised data is deleted from the neighbor switch's MIB. (Default: 4; Range: 2 - 10)

For example, if the refresh-interval on the switch is 15 seconds and the **holdtime-multiplier** is at the default, the Time-to-Live for advertisements transmitted from the switch is 60 seconds (4 x 15). To reduce the Time-to-Live, you could lower the **holdtime-interval** to 2, which would result in a Time-to-Live of 30 seconds.

```
ProCurve(config)# lldp holdtime-multiplier 2
```

Changing the Delay Interval Between Advertisements Generated by Value or Status Changes to the LLDP MIB. The switch uses a *delay-interval* setting to delay transmitting successive advertisements resulting from these LLDP MIB changes. If a switch is subject to frequent changes to its LLDP MIB, lengthening this interval can reduce the frequency of successive advertisements. The delay-interval can be changed using either an SNMP network management application or the CLI **setmib** command.

Syntax setmib lldpTxDelay.0 -i < 1 - 8192 >

Uses **setmib** *to change the minimum time (delay-interval) any LLDP port will delay advertising successive LLDP advertisements due to a change in LLDP MIB content. (Default: 2; Range: 1 - 8192)*

Note: *The LLDP refresh-interval (transmit interval) must be greater than or equal to (4 x delay-interval). The switch does not allow increasing the delay interval to a value that conflicts with this relationship. That is, the switch displays* **Inconsistent value** *if (4 x delay-interval) exceeds the current transmit interval, and the command fails. Depending on the current refresh-interval setting, it may be necessary to increase the refresh-interval before using this command to increase the delay-interval.*

For example, to change the delay-interval from 2 seconds to 8 seconds when the refresh-interval is at the default 30 seconds, you must first set the refresh-interval to a minimum of 32 seconds (32 = 4 x 8).

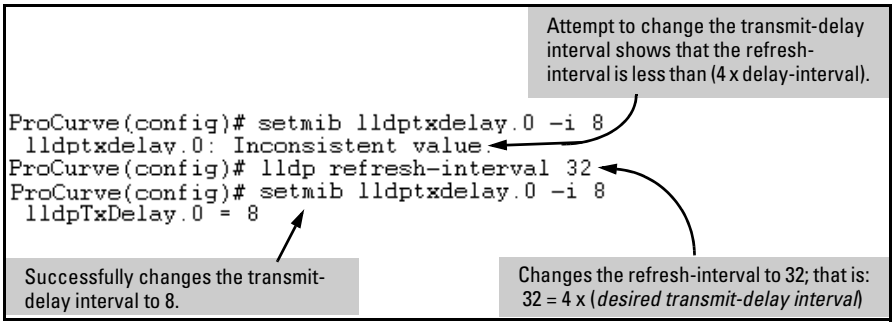

Figure 15-13. Example of Changing the Transmit-Delay Interval

Changing the Reinitialization Delay Interval. In the default configuration, a port receiving a **disable** command followed immediately by a **txonly**, **rxonly**, or **tx_rx** command delays reinitializing for two seconds, during which time LLDP operation remains disabled. If an active port is subjected to frequent toggling between the LLDP disabled and enabled states, LLDP advertisements are more frequently transmitted to the neighbor device. Also, the neighbor table in the adjacent device will change more frequently, as it deletes, then replaces LLDP data for the affected port which, in turn, generates SNMP traps (if trap receivers and SNMP notification are configured). All of this can unnecessarily increase network traffic. Extending the reinitialization-

delay interval delays the port's ability to reinitialize and generate LLDP traffic following an LLDP disable/enable cycle.

Syntax setmib lldpReinitDelay.0 -i < 1 - 10 >

Uses **setmib** *to change the minimum time (reinitialization delay interval) an LLDP port will wait before reinitializing after receiving an LLDP disable command followed closely by a txonly or tx_rx command. The delay interval commences with execution of the* **lldp admin-status < port-list > disable** *command. (Default: 2 seconds; Range: 1 - 10 seconds)*

For example, the following command changes the reinitialization delay interval to five seconds:

```
ProCurve(config)# setmib lldpreinitdelay.0 -i 5
```

Configuring SNMP Notification Support

You can enable SNMP trap notification of LLDP data changes detected on advertisements received from neighbor devices, and control the interval between successive notifications of data changes on the same neighbor.

Enabling LLDP Data Change Notification for SNMP Trap Receivers.

Syntax [no] lldp enable-notification < *port-list* >

Enables or disables each port in < port-list > for sending notification to configured SNMP trap receiver(s) if an LLDP data change is detected in an advertisement received on the port from an LLDP neighbor. (Default: Disabled)

For information on configuring trap receivers in the switch, refer to the chapter titled "Configuring for Network Management Applications" in the Management and Configuration Guide for your switch.

For example, this command enables SNMP notification on ports 1 - 5:

```
ProCurve(config)# lldp enable-notification 1-5
```

Changing the Minimum Interval for Successive Data Change Notifications for the Same Neighbor

LLDP trap notification is enabled on a port, a rapid succession of changes in LLDP information received in advertisements from one or more neighbors can generate a high number of traps. To reduce this effect, you can globally change the interval between successive notifications of neighbor data change.

Syntax setmib lldpnotificationinterval.0 -i < 1 - 3600 >

Globally changes the interval between successive traps generated by the switch. If multiple traps are generated in the specified interval, only the first trap will be sent. The remaining traps will be suppressed. (A network management application can periodically check the switch MIB to detect any missed change notification traps. Refer to IEEE P802.1AB or later for more information.) (Default: 5 seconds)

For example, the following command limits change notification traps from a particular switch to one per minute.

```
ProCurve(config)# setmib lldpnotificationinterval.0 -i 60
lldpNotificationInterval.0 = 60
```

Configuring Per-Port Transmit and Receive Modes

These commands control advertisement traffic inbound and outbound on active ports.

Syntax lldp admin-status < *port-list* > < txonly | rxonly | tx_rx | disable >

With LLDP enabled on the switch in the default configuration, each port is configured to transmit and receive LLDP packets. These options enable you to control which ports participate in LLDP traffic and whether the participating ports allow LLDP traffic in only one direction or in both directions.

txonly: *Configures the specified port(s) to transmit LLDP packets, but block inbound LLDP packets from neighbor devices.*

rxonly: *Configures the specified port(s) to receive LLDP packets from neighbors, but block outbound packets to neighbors.*

tx_rx: *Configures the specified port(s) to both transmit and receive LLDP packets. (This is the default setting.)*

disable: *Disables LLDP packet transmit and receive on the specified port(s).*

Configuring Basic LLDP Per-Port Advertisement Content

In the default LLDP configuration, outbound advertisements from each port on the switch include both mandatory and optional data.

Mandatory Data. An active LLDP port on the switch always includes the mandatory data in its outbound advertisements. LLDP collects the mandatory data, and, except for the Remote Management Address, you cannot use LLDP commands to configure the actual data.

- Chassis Type (TLV subelement)
- Chassis ID (TLV)
- Port Type (TLV subelement)
- Port ID (TLV)
- Remote Management Address (TLV; actual IP address is a subelement that can be a default address or a configured address)

Configuring a Remote Management Address for Outbound LLDP Advertisements. This is an optional command you can use to include a specific IP address in the outbound LLDP advertisements for specific ports.

Syntax [no] lldp config < *port-list* > ipAddrEnable < *ip-address* >

Replaces the default IP address for the port with an IP address you specify. This can be any IP address configured in a static VLAN on the switch, even if the port does not belong to the VLAN configured with the selected IP address. The ***no*** *form of the command deletes the specified IP address. If there are no IP addresses configured as management addresses, then the IP address selection method returns to the default operation. (Default: The port advertises the IP address of the lowest-numbered VLAN (VID) to which it belongs. If there is no IP address configured on the VLAN(s) to which the port belongs, and the port is not configured to advertise an IP address from any other (static) VLAN on the switch, then the port advertises an address of 127.0.0.1.)*

Note: *This command does not accept either IP addresses acquired through DHCP or Bootp, or IP addresses that are not configured in a static VLAN on the switch*

For example, if port 3 belongs to a subnetted VLAN that includes an IP address of 10.10.10.100 and you wanted port 3 to use this secondary address in LLDP advertisements, you would need to execute the following command:

```
ProCurve(config)# lldp config 3 ipAddrEnable 10.10.10.100
```

Optional Data. You can configure an individual port or group of ports to exclude one or more of these data types from outbound LLDP advertisements. Note that optional data types, when enabled, are populated with data internal to the switch; that is, you cannot use LLDP commands to configure their actual content.

- port description (TLV)
- system name (TLV)
- system description (TLV)
- system capabilities (TLV)
  - system capabilities Supported (TLV subelement)
  - system capabilities Enabled (TLV subelement)
- port speed and duplex (TLV subelement)

Syntax: [no] lldp config < *port-list* > basicTlvEnable < *TLV-Type* >

port_descr

For outbound LLDP advertisements, this TLV includes an alphanumeric string describing the port.
(Default: Enabled)

system_name

For outbound LLDP advertisements, this TLV includes an alphanumeric string showing the system's assigned name.
(Default: Enabled)

system_descr

For outbound LLDP advertisements, this TLV includes an alphanumeric string describing the full name and version identification for the system's hardware type, software version, and networking application.
(Default: Enabled)

system_cap

For outbound advertisements, this TLV includes a bitmask of supported system capabilities (device functions). Also includes information on whether the capabilities are enabled.
(Default: Enabled)

For example, if you wanted to exclude the system name TLV from the outbound LLDP advertisements for all ports on a 3400cl-24G switch, you would use this command:

```
ProCurve(config)# no lldp config 1-24 basicTlvEnable
system_name
```

If you later decided to reinstate the system name TLV on ports 1-5, you would use this command:

```
ProCurve(config)# lldp config 1-5 basicTlvEnable
system_name
```

Configuring Support for Port Speed and Duplex Advertisements on the 5300xl and 4200vl Switches

This feature operates only on 5300xl switches running software release E.10.x or greater, and 4200vl switches.

This feature is enabled in the default LLDP-MED configuration on 5300xl switches running software release E.10.x or greater, and on 4200vl switches. It is optional for LLDP operation, but is *required* for LLDP-MED operation.

Port speed and duplex advertisements are supported on 5300xl switches and 4200vl switches to inform an LLDP endpoint and the switch port of each other's port speed and duplex configuration and capabilities. Configuration mismatches between a switch port and an LLDP endpoint can result in excessive collisions and voice quality degradation. LLDP enables discovery of such mismatches by supporting SNMP access to the switch MIB for comparing the current switch port and endpoint settings. (Changing a current device configuration to eliminate a mismatch requires intervention by the system operator.)

Syntax: [no] lldp config < *port-list* > dot3TlvEnable macphy_config

> ***Note:*** *This command applies only to 5300xl switches running software release E.10.xx or greater, and 4200vl switches.*
>
> *For outbound advertisements, this TLV includes the (local) switch port's current speed and duplex settings, the range of speed and duplex settings the port supports, and the method required for reconfiguring the speed and duplex settings on the device (auto-negotiation during link initialization, or manual configuration).*
>
> *Using SNMP to compare local and remote information can help in locating configuration mismatches.*
> *(Default: Enabled)*
>
> ***Note:*** *For LLDP operation, this TLV is optional. For LLDP-MED operation, this TLV is mandatory.*

As mentioned above, an SNMP network management application can be used to compare the port speed and duplex data configured in the switch and advertised by the LLDP endpoint. You can also use the CLI to display this information. For more on using the CLI to display port speed and duplex information, refer to "Displaying the Current Port Speed and Duplex Configuration on a Switch Port" on page 15-64.

LLDP-MED (Media-Endpoint-Discovery) for the 5300xl and 4200vl Switches

As of October 2006, LLDP-MED operates only on 5300xl switches running software release E.10.x or greater, and 4200vl switches.

LLDP-MED (ANSI/TIA-1057/D6) extends the LLDP (IEEE 802.1AB) industry standard to support advanced features on the network edge for Voice Over IP (VoIP) endpoint devices with specialized capabilities and LLDP-MED standards-based functionality. LLDP-MED uses the standard LLDP commands described earlier in this section, with some extensions, and also introduces new commands unique to LLDP-MED operation. The **show** commands described elsewhere in this section are applicable to both LLDP and LLDP-MED operation. LLDP-MED benefits include:

- plug-and-play provisioning for MED-capable, VoIP endpoint devices
- simplified, vendor-independent management enabling different IP telephony systems to interoperate on one network
- automatic deployment of convergence network policies (voice VLANs, Layer 2/CoS priority, and Layer 3/QoS priority)
- configurable endpoint location data to support the Emergency Call Service (ECS) (such as Enhanced 911 service, 999, 112)
- detailed VoIP endpoint data inventory readable via SNMP from the switch
- Power over Ethernet (PoE) status and troubleshooting support via SNMP
- support for IP telephony network troubleshooting of call quality issues via SNMP

This section describes how to configure and use LLDP-MED features in the 5300xl switches running software release E.10.x or greater, and 4200vl switches, to support VoIP network edge devices (Media Endpoint Devices) such as:

- IP phones
- voice/media gateways
- media servers

- IP communications controllers
- other VoIP devices or servers

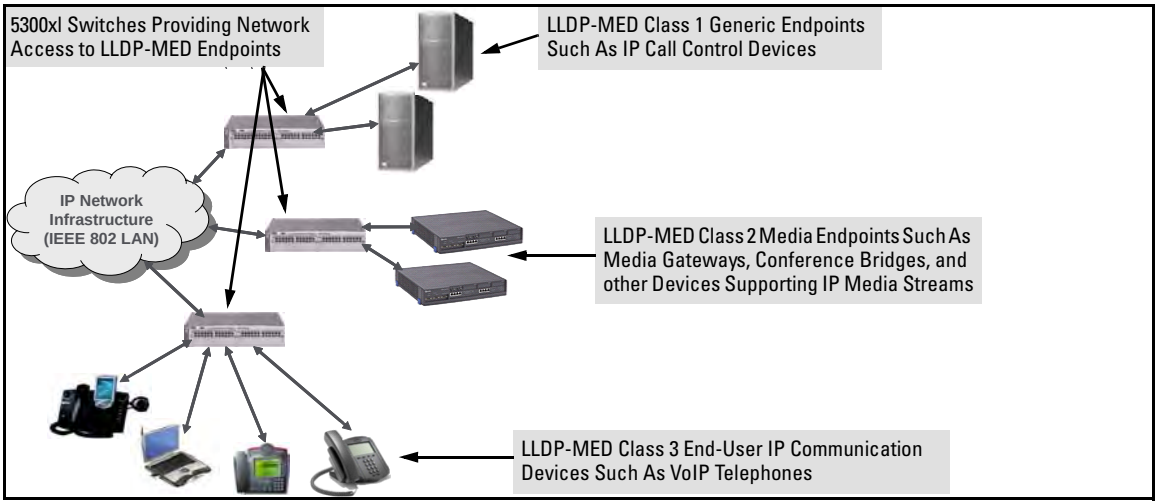

Figure 15-14. Example of LLDP-MED Network Elements

LLDP-MED Endpoint Support. LLDP-MED interoperates with directly connected IP telephony (endpoint) clients having these features and services:

- able to autonegotiate speed and duplex configuration with the switch
- able to use the following network policy elements configured on the client port
  - voice VLAN ID
  - 802.1p (Layer 2) QoS
  - Diffserv codepoint (DSCP) (Layer 3) QoS
- discover and advertise device location data learned from the switch
- support emergency call service (ECS—such as E911, 999, and 112)
- advertise device information for the device data inventory collected by the switch, including:
  - hardware revision
  - firmware revision
  - software revision
  - serial number
  - manufacturer name
  - model name
  - asset ID

- provide information on network connectivity capabilities (for example, a multi-port VoIP phone with Layer 2 switch capability)
- support the fast start capability

Note

LLDP-MED is intended for use with VoIP endpoints, and is not designed to support links between network infrastructure devices, such as switch-to-switch or switch-to-router links.

LLDP-MED Endpoint Device Classes. LLDP-MED endpoint devices are, by definition, located at the network edge and communicate using the LLDP-MED framework. Any LLDP-MED endpoint device belongs to one of the following three classes:

- Class 1 (Generic Endpoint Devices): These devices offer the basic LLDP discovery services, network policy advertisement (VLAN ID, Layer 2/802.1p priority, and Layer 3/DSCP priority), and PoE management. This class includes such devices as IP call controllers and communication-related servers.
- Class 2 (Media Endpoint Devices): These devices offer all Class 1 features plus media streaming capability, and include such devices as voice/media gateways, conference bridges, and media servers.
- Class 3 (Communication Devices): These devices are typically IP phones or end-user devices that otherwise support IP media and offer all Class 1 and Class 2 features, plus location identification and emergency 911 capability, Layer 2 switch support, and device information management.

LLDP-MED Operational Support on the 5300xl and 4200vl Switches.

The 4200vl switches, and the 5300xl switches beginning with software release E.10.xx, offer two configurable TLVs supporting MED-specific capabilities:

- medTlvEnable (for per-port enabling or disabling of LLDP-MED operation)
- medPortLocation (for configuring per-port location or emergency call data)

Note

LLDP-MED operation also requires the port speed and duplex TLV (dot3TlvEnable; page 15-46), which is enabled in the default configuration.

LLDP-MED Topology Change Notification

This optional feature provides information an SNMP application can use to track LLDP-MED connects and disconnects.

Syntax: lldp top-change-notify < *port-list* >

Topology change notification, when enabled on an LLDP port, causes the switch to send an SNMP trap if it detects LLDP-MED endpoint connection or disconnection activity on the port, or an age-out of the LLDP-MED neighbor on the port. The trap includes the following information:

- *the port number (internal) on which the activity was detected (For more in internal port numbers, refer to "Determining the 5300xl Port Number Included in Topology Change Notification Traps" on page 15-71.)*
- *the LLDP-MED class of the device detected on the port ("LLDP-MED Endpoint Device Classes" on page 15-49.)*

The **show running** command shows whether the topology change notification feature is enabled or disabled. For example, if ports A1-A10 have topology change notification enabled, the following entry appears in the **show running** output:

```
lldp top-change-notify A1-A10
```

(Default: Disabled)

Note: To send traps, this feature requires access to at least one SNMP server. For information on configuring traps, go to the chapter titled "Configuring for Network Management Applications" in the Management and Configuration Guide for your switch, and refer to one of the following sections:

- SNMPv1 and SNMPv2c Trap Features
- SNMPv3 Notification and Traps

Also, if a detected LLDP-MED neighbor begins sending advertisements without LLDP-MED TLVs, the switch sends a top-change-notify trap.

Note

Topology change notifications provide one method for monitoring system activity. However, because SNMP normally employs UDP, which does not guarantee datagram delivery, topology change notification should not be relied upon as the sole method for monitoring critical endpoint device connectivity.

LLDP-MED Fast Start Control

Syntax: lldp fast-start-count < 1 - 10 >

An LLDP-MED device connecting to a switch port may use the data contained in the MED TLVs from the switch to configure itself. However, the **lldp refresh-interval** *setting (default: 30 seconds) for transmitting advertisements can cause an unacceptable delay in MED device configuration. To support rapid LLDP-MED device configuration, the* **lldp fast-start-count** *command temporarily overrides the* **refresh-interval** *setting for the* **fast-start-count** *advertisement interval. This results in the port initially advertising LLDP-MED at a faster rate for a limited time. Thus, when the switch detects a new LLDP-MED device on a port, it transmits one LLDP-MED advertisement per second out the port for the duration of the* **fast-start-count** *interval. In most cases, the default setting should provide an adequate* **fast-start-count** *interval.*

(Range: **1** - **10** *seconds; Default:* **5** *seconds)*

Note: This global command applies only to ports on which a new LLDP-MED device is detected. It does not override the refresh-interval setting on ports where non-MED devices are detected.

Advertising Device Capability, Network Policy, PoE Status and Location Data

The medTlvEnable option on the switch is enabled in the default configuration and supports the following LLDP-MED TLVs:

- LLDP-MED capabilities: This TLV enables the switch to determine:
  - whether a connected endpoint device supports LLDP-MED
  - which specific LLDP-MED TLVs the endpoint supports
  - the device class (1, 2, or 3) for the connected endpoint

  This TLV also enables an LLDP-MED endpoint to discover what LLDP-MED TLVs the switch port currently supports.
- network policy operating on the port to which the endpoint is connected (VLAN, Layer 2 QoS, Layer 3 QoS)
- PoE (MED Power-over-Ethernet)
- physical location data — page 56

Note

LLDP-MED operation requires the macphy_config TLV subelement—enabled by default—that is optional for IEEE 802.1AB LLDP operation. Refer to the **dot3TlvEnable macphy_config** command on page 15-46.

Network Policy Advertisements. Network policy advertisements are intended for real-time voice and video applications, and include these TLV subelements:

- Layer 2 (802.1p) QoS
- Layer 3 DSCP (diffserv code point) QoS
- Voice VLAN ID (VID)

VLAN Operating Rules. These rules affect advertisements of VLANs in network policy TLVs:

- The VLAN ID TLV subelement applies only to a VLAN configured for voice operation (**vlan** < ***vid*** > **voice**).
- If there are multiple voice VLANs configured on a port, LLDP-MED advertises the voice VLAN having the lowest VID.

- The voice VLAN port membership configured on the switch can be tagged or untagged. However, if the LLDP-MED endpoint expects a tagged membership when the switch port is configured for untagged, or the reverse, then a configuration mismatch results. (Typically, the endpoint expects the switch port to have a tagged voice VLAN membership.)
- If a given port does not belong to a voice VLAN, then the switch does not advertise the VLAN ID TLV through this port.

Policy Elements. These policy elements may be statically configured on the switch or dynamically imposed during an authenticated session using a RADIUS server and 802.1X or MAC authentication. (Web authentication does not apply to VoIP telephones and other telecommunications devices that are not capable of accessing the switch through a Web browser.) The QoS and voice VLAN policy elements can be statically configured with the following CLI commands:

vlan < *vid* > voice

vlan < *vid* > < tagged | untagged > < *port-list* >

int < *port-list* > qos priority < 0 - 7 >

vlan < *vid* > qos dscp < *codepoint* >

Notes

A codepoint must have an 802.1p priority before you can configure it for use in prioritizing packets by VLAN-ID. If a codepoint you want to use shows **No Override** in the **Priority** column of the DSCP policy table (display with **show qos-dscp map**, then use **qos-dscp map < *codepoint* > priority < 0 - 7 >** to configure a priority before proceeding. For more on this topic, refer to the chapter titled "Quality of Service (QoS): Managing Bandwidth More Effectively" in the *Advanced Traffic Management Guide* for your switch.

Enabling or Disabling medTlvEnable on 5300xl or 4200vl Switches.

In the default LLDP-MED configuration, the TLVs controlled by medTlvEnable are enabled.

Syntax: [no] lldp config < *port-list* > medTlvEnable < *medTlv* >

- *Enables or disables advertisement of the following TLVs on the specified ports:*
  - *device capability TLV*
  - *configured network policy TLV*
  - *configured location data TLV (Refer to "Configuring Location Data for LLDP-MED Devices" on page 15-56.)*
  - *current PoE status TLV*

  (Default: All of the above TLVs are enabled.)
- *Helps to locate configuration mismatches by allowing use of an SNMP application to compare the LLDP-MED configuration on a port with the LLDP-MED TLVs advertised by a neighbor connected to that port.*

capabilities

This TLV enables the switch to determine:

- *which LLDP-MED TLVs a connected endpoint can discover*
- *the device class (1, 2, or 3) for the connected endpoint*

This TLV also enables an LLDP-MED endpoint to discover what LLDP-MED TLVs the switch port currently supports.

(Default: enabled)

Note: *This TLV cannot be disabled unless the* network_policy, poe, and location_id *TLVs are already disabled.*

network-policy

This TLV enables the switch port to advertise its configured network policies (voice VLAN, Layer 2 QoS, Layer 3 QoS), and allows LLDP-MED endpoint devices to auto-configure the voice network policy advertised by the switch. This also enables the use of SNMP applications to troubleshoot statically configured endpoint network policy mismatches.

(Default: Enabled)

Notes: *Network policy is only advertised for ports that are configured as members of the voice VLAN. If the port belongs to more than one voice VLAN, then the voice VLAN with the lowest-numbered VID is selected as the VLAN for voice traffic. Also, this TLV cannot be enabled unless the* capability *TLV is already enabled.*

For more information, refer to "Network Policy Advertisements" on page 15-52

location_id

This TLV enables the switch port to advertise its configured location data (if any). For more on configuring location data, refer to "Configuring Location Data for LLDP-MED Devices".

(Default: Enabled)

Note: *When disabled, this TLV cannot be enabled unless the* capability *TLV is already enabled.*

poe

This TLV enables the switch port to advertise its current PoE (Power over Ethernet) state and to read the PoE requirements advertised by the LLDP-MED endpoint device connected to the port.

(Default: Enabled)

Note: *When disabled, this TLV cannot be enabled unless the* capability *TLV is already enabled.*

For more on this topic, refer to "PoE Advertisements", below.

PoE Advertisements. These advertisements inform an LLDP-MED endpoint of the power (PoE) configuration on switch ports. Similar advertisements from an LLDP-MED endpoint inform the switch of the endpoint's power needs and provide information that can be used to identify power priority mismatches.

Power-over-Ethernet TLVs include the following power data:

- **power type:** indicates whether the device is a power-sourcing entity (PSE) or a powered device (PD). Ports on the J8161A PoE xl module are PSE devices. A MED-capable VoIP telephone is a PD.
- **power source**: indicates the source of power in use by the device. Power sources for powered devices (PDs) include PSE, local (internal), and PSE/local. The 5300xl switches advertise Unknown.
- **power priority:** indicates the power priority configured on the switch (PSE) port or the power priority configured on the MED-capable endpoint.
- **power value:** indicates the total power in watts that a switch port (PSE) can deliver at a particular time, or the total power in watts that the MED endpoint (PD) requires to operate.

To display the current power data for an LLDP-MED device connected to a port, use the following command:

show lldp info remote-device < port-list >

For more on this command, refer to page 66.

To display the current PoE configuration on the switch, use the following commands:

show power brief < port-list >

show power < port-list >

For more on PoE configuration and operation, refer to the chapter titled "Power Over Ethernet (PoE) Operation for the Series 5300xl Switches" in the *Management and Configuration Guide* for your switch.

Configuring Location Data for LLDP-MED Devices

You can configure a switch port to advertise location data for the switch itself, the physical wall-jack location of the endpoint (recommended), or the location of a DHCP server supporting the switch and/or endpoint. You also have the option of configuring these different address types:

- **civic address:** physical address data such as city, street number, and building information

- **ELIN (Emergency Location Identification Number):** an emergency number typically assigned to MLTS (Multiline Telephone System Operators) in North America
- **coordinate-based location:** attitude, longitude, and altitude information (Requires configuration via an SNMP application.)

Syntax: [no] lldp config < *port-list* > medPortLocation < *Address-Type* >

Configures location or emergency call data the switch advertises per port in the **location_id** *TLV. This TLV is for use by LLDP-MED endpoints employing location-based applications.*

Note: *The switch allows one medPortLocation entry per port (without regard to type). Configuring a new medPortLocation entry of any type on a port replaces any previously configured entry on that port.*

civic-addr < *COUNTRY-STR* > < *WHAT* > < *CA-TYPE* > < *CA-VALUE* > . . .
[< *CA-TYPE* > < *CA-VALUE* >] . . . [< *CA-TYPE* > < *CA-VALUE* >]

This command enables configuration of a physical address on a switch port, and allows up to 75 characters of address information.

COUNTRY-STR: *A two-character country code, as defined by ISO 3166. Some examples include* **FR** *(France),* **DE** *(Germany), and* **IN** *(India). This field is required in a* **civic-addr** *command. (For a complete list of country codes, visit* **www.iso.org** *on the world wide web.)*

WHAT: *A single-digit number specifying the type of device to which the location data applies:*

- **0:** *Location of DHCP server*
- **1:** *Location of switch*
- **2:** *Location of LLDP-MED endpoint (recommended application)*

This field is required in a **civic-addr** *command.*

Type/Value Pairs (**CA-TYPE** *and* **CA-VALUE*****):*** *This is a series of data pairs, each composed of a location data "type" specifier and the corresponding location data for that type. That is, the first value in a pair is expected to be the civic address "type" number (****CA-TYPE****), and the second value in a pair is expected to be the corresponding civic address data (****CA-VALUE****). For example, if the* ***CA-TYPE*** *for "city name" is "****3****", then the type/value pair to define the city of Paris is "****3 Paris****". Multiple type/value pairs can be entered in any order, although it is recommended that multiple pairs be entered in ascending order of the* ***CA-TYPE****.*

When an emergency call is placed from a properly configured class 3 endpoint device to an appropriate PSAP, the country code, device type, and type/value pairs configured on the switch port are included in the transmission. The "type" specifiers are used by the PSAP to identify and organize the location data components in an understandable format for response personnel to interpret. A **civic-addr** *command requires a minimum of one type/value pair, but typically includes multiple type/value pairs as needed to configure a complete set of data describing a given location.*

CA-TYPE: *This is the first entry in a type/value pair, and is a number defining the type of data contained in the second entry in the type/value pair (**CA-VALUE**). Some examples of **CA-TYPE** specifiers include:*

- *3 = city*
- *6 = street (name)*
- *25 = building name*

(Range: 0 - 255)

*For a sample listing of **CA-TYPE** specifiers, refer to table 15-5 on page 15-60.*

CA-VALUE: *This is the second entry in a type/value pair, and is an alphanumeric string containing the location information corresponding to the immediately preceding **CA-TYPE** entry. Strings are delimited by either blank spaces, single quotes ('... '), or double quotes ("... "). Each string should represent a specific data type in a set of unique type/value pairs comprising the description of a location, and each string must be preceded by a **CA-TYPE** number identifying the type of data in the string.*

Note: *A 5300xl port allows one instance of any given **CA-TYPE**. For example, if a type/value pair of* **6 Atlantic** *(to specify "Atlantic" as a street name) is configured on port A5 and later another type/value pair of* **6 Pacific** *is configured on the same port, then* **Pacific** *replaces* **Atlantic** *in the civic address location configured for port A5.*

elin-addr < *emergency-number* >

This feature is intended for use in Emergency Call Service (ECS) applications to support class 3 LLDP-MED VoIP telephones connected to a 5300xl switch in a multiline telephone system (MLTS) infrastructure. An ELIN (Emergency Location Identification Number) is a valid North American Numbering Plan (NANP) format telephone number assigned to MLTS operators in North America by the appropriate authority. The ELIN is used to route emergency (E911) calls to a Public Safety Answering Point (PSAP).

(Range: 1-15 numeric characters)

Configuring Coordinate-Based Locations. Latitude, longitude, and altitude data can be configured per switch port using an SNMP management application. For more information, refer to the documentation provided with the application. A further source of information on this topic is *RFC 3825-Dynamic Host Configuration Protocol Option for Coordinate-based Location Configuration Information.*

Note

Endpoint use of data from a medPortLocation TLV sent by the switch is device-dependent. Refer to the documentation provided with the endpoint device.

Table 15-5. Some Location Codes Used in CA-TYPE Fields*

Location Element	Code	Location Element	Code
national subdivision	1	street number	19
regional subdivision	2	additional location data	22
city or township	3	unit or apartment	26
city subdivision	4	floor	27
street	6	room number	28
street suffix	18		

*The code assignments in this table are examples from a work-in-progress (the internet draft titled "Dynamic Host Configuration Protocol (DHCPv4 and DHCPv6) Option for Civic Addresses Configuration Information draft-ietf-geopriv-dhcp-civil-06" dated May 30, 2005.) For the actual codes to use, contact the PSAP or other authority responsible for specifying the civic addressing data standard for your network.

Example of a Location Configuration on a 5300xl Switch Port.

Suppose a system operator wanted to configure the following information as the civic address for a telephone connected to her company's network through port A2 of a 5300xl switch at the following location:

Description	CA-Type	CA-VALUE
national subdivision	1	CA
city	3	Widgitville
street	6	Main
street number	19	1433
unit	26	Suite 4-N
floor	27	4
room number	28	N4-3

Figure 15-15 shows the commands for configuring and displaying the above data.

```
ProCurve(config)# lldp config a2 medportlocation civic-addr US 2 1 CA 3 Widgitvi
lle 6 Main 19 1433 26 Suite_4-N 27 4 28 N4-3

ProCurve(config)# show lldp config a2

 LLDP Port Configuration Detail

  Port : A2
  AdminStatus [Tx_Rx] : Tx_Rx
  NotificationEnabled [False] : False
  Med Topology Trap Enabled [False] : False

  Country Name                  : US
  What                          : 2
  Ca-Type                       : 1
  Ca-Length                     : 2
  Ca-Value                      : CA
  Ca-Type                       : 3
  Ca-Length                     : 11
  Ca-Value                      : Widgitville
  Ca-Type                       : 6
  Ca-Length                     : 4
  Ca-Value                      : Main
  Ca-Type                       : 19
  Ca-Length                     : 4
  Ca-Value                      : 1433
  Ca-Type                       : 26
  Ca-Length                     : 9
  Ca-Value                      : Suite_4-N
  Ca-Type                       : 27
  Ca-Length                     : 1
  Ca-Value                      : 4
  Ca-Type                       : 28
  Ca-Length                     : 4
  Ca-Value                      : N4-3
```

Figure 15-15. Example of a Civic Address Configuration

Displaying Advertisement Data

Command	Page
show lldp info local-device	below
walkmib lldpXdot3LocPortOperMauType	
show lldp info remote-device	15-65
walkmib lldpXdot3RemPortAutoNegAdvertisedCap	
show lldp info stats	15-68

Displaying Switch Information Available for Outbound Advertisements

These commands display the current switch information that will be used to populate outbound LLDP advertisements.

Syntax show lldp info local-device [*port-list*]

Without the [port-list] option, this command displays the global switch information and the per-port information currently available for populating outbound LLDP advertisements.

With the [port-list] option, this command displays only the following port-specific information that is currently available for outbound LLDP advertisements on the specified ports:

- **PortType**
- **PortId**
- **PortDesc**

Note: *This command displays the information available on the switch. Use the* **lldp config < port-list >** *command to change the selection of information that is included in actual outbound advertisements. In the default LLDP configuration, all information displayed by this command is transmitted in outbound advertisements.*

For example, in the default configuration, the switch information currently available for outbound LLDP advertisements appears similar to the display in figure 15-16 on page 15-64.

```
ProCurve(config)# show lldp info local-device

 LLDP Local Device Information

  Chassis Type : mac-address
  Chassis Id   : 00 08 83 08 db 20
  System Name  : Switch A
  System Description : HP J4903A ProCurve Switch 2824, revision M.08.51, RO...
  System Capabilities Supported : bridge, router
  System Capabilities Enabled   : bridge
  Management Address  :
     Type:ipv4
     Address:

 LLDP Port Information

  Port      | PortType PortId   PortDesc
  -------- + -------- -------- --------
  1         | local    1        1
  2         | local    2        2
  3         | local    3        3
  4         | local    4        4
  5         | local    5        5
  6         | local    6        6
  .           .        .        .
  .           .        .        .
  .           .        .        .
```

The Management Address field displays only the LLDP-configurable IP addresses on the switch. (Only manually-configured IP addresses are LLDP-configurable.) If the switch has only an IP address from a DHCP or Bootp server, then the Management Address field is empty (because there are no LLDP-configurable IP addresses available). For more on this topic, refer to "Remote Management Address" on page 15-30.

Figure 15-16. Example of Displaying the Global and Per-Port Information Available for Outbound Advertisements

```
ProCurve(config)# show lldp info local 1-2

 LLDP Local Port Information Detail

  Port     : 1
  PortType : local
  PortId   : 1
  PortDesc : 1

-------------------------------------------
  Port     : 2
  PortType : local
  PortId   : 2
  PortDesc : 2
```

Figure 15-17. Example of the Default Per-Port Information Content for Ports 1 and 2

Displaying the Current Port Speed and Duplex Configuration on a Switch Port. Port speed and duplex information for a switch port and a connected LLDP-MED endpoint can be compared for configuration mismatches by using an SNMP application. You can also use the switch CLI to display this information, if necessary. The following two commands provide methods for displaying speed and duplex information for switch ports. For

information on displaying the currently configured port speed and duplex on an LLDP-MED endpoint, refer to "Displaying the Current Port Speed and Duplex Configuration on a Switch Port" on page 15-64.

Syntax: show interfaces brief < *port-list* >

Includes port speed and duplex configuration in the **Mode** *column of the resulting display.*
(This command is available on all switch models covered by this guide.)

Displaying Advertisements Currently in the Neighbors MIB. These commands display the content of the inbound LLDP advertisements received from other LLDP devices.

Syntax show lldp info remote-device [*port-list*]

Without the [port-list] option, this command provides a global list of the individual devices it has detected by reading LLDP advertisements. Discovered devices are listed by the inbound port on which they were discovered. Multiple devices listed for a single port indicates one of the following:

- ***5300xl and 4200vl Switches:*** *Multiple devices listed for the same port indicates that such devices are connected to the switch through a hub.*
- ***3400cl/6400cl Switches:*** *Multiple devices listed for the same port indicate that multiple devices are connected to the switch through a hub.*

Discovering the same device on multiple ports indicates that the remote device may be connected to the switch in one of the following ways:

- *Through different VLANS using separate links. (This applies to switches that use the same MAC address for all configured VLANs.)*
- *Through different links in the same trunk.*
- *Through different links using the same VLAN. (In this case, spanning-tree should be invoked to prevent a network topology loop. Note that LLDP packets travel on links that spanning-tree blocks for other traffic types.)*

With the [port-list] *option, this command provides a listing of the LLDP data that the switch has detected in advertisements received on the specified ports.*
For descriptions of the various types of information displayed by these commands, refer to Table 15-3 on page 15-29.

```
ProCurve Switch 3400cl-24G# show lldp info remote

 LLDP Remote Devices Information

  LocalPort | ChassisId                 PortId PortName SysName
  --------- + ------------------------- ------ -------- ----------------------
  1         | 00 11 85 c6 54 60         17     17          ProCurve Switch ...
  2         | 00 11 85 cf 66 80         33     33          ProCurve Switch ...
```

Note: In software releases earlier than M_08_06x (for the 3400cl switches only), a **Port Type** column appears with this command instead of the **PortId**, **PortName** columns shown in this figure.

Note: In software release E.10.x and greater for the 5300xl switches, and for 4200vl switches, the **PortName** column heading appears as **PortDescr**.

Figure 15-18. Example of a Global Listing of Discovered Devices

```
ProCurve(config)# show lldp info remote-device a2

 LLDP Remote Device Information Detail

  Local Port    : A2
  ChassisType   : network-address
  ChassisId     : 0f ff  7a 5c
  PortType      : mac-address
  PortId        : 08 00 0f 14 de f2
  SysName       : regDN 3004,<IP-Phone-Data>
  System Descr  : regDN 3004,<IP-Phone-Data>,h/w rev 0,ASIC rev 0,f/w Boot FW...
  PortDescr     : LAN port

  System Capabilities Supported  : bridge, telephone
  System Capabilities Enabled    : bridge, telephone

  Remote Management Address

  MED Information Detail
    EndpointClass           :Class3
    Media Policy Vlan id    :10
    Media Policy Priority   :7
    Media Policy Dscp       :44
    Media Policy Tagged     :False
    Poe Device Type         :PD
    Power Requested         :47
    Power Source            :Unknown
    Power Priority          :High
```

Indicates the policy configured on the telephone. A configuration mismatch occurs if the supporting port is configured differently.

Figure 15-19. Example of a 5300xl LLDP-MED Listing of an Advertisement Received From an LLDP-MED (VoIP Telephone) Source

Displaying LLDP Statistics

LLDP statistics are available on both a global and a per-port levels. Rebooting the switch resets the LLDP statistics counters to zero. Disabling the transmit and/or receive capability on a port "freezes" the related port counters at their current values.

Syntax show lldp stats [*port-list*]

The global LLDP statistics command displays an overview of neighbor detection activity on the switch, plus data on the number of frames sent, received, and discarded per-port. The per-port LLDP statistics command enhances the list of per-port statistics provided by the global statistics command with some additional per-port LLDP statistics.

Global LLDP Counters:

Neighbor Entries List Last Updated: *Shows the elapsed time since a neighbor was last added or deleted.*

New Neighbor Entries Count: *Shows the total of new LLDP neighbors detected since the last switch reboot. Disconnecting, then reconnecting a neighbor increments this counter.*

Neighbor Entries Deleted Count: *Shows the number of neighbor deletions from the MIB for AgeOut Count and forced drops for all ports. For example, if the admin status for port on a neighbor device changes from* **tx_rx** *or* **txonly** *to* **disabled** *or* **rxonly**, *then the neighbor device sends a "shutdown" packet out the port and ceases transmitting LLDP frames out that port. The device receiving the shutdown packet deletes all information about the neighbor received on the applicable inbound port and increments the counter.*

Neighbor Entries Dropped Count: *Shows the number of valid LLDP neighbors the switch detected, but could not add. This can occur, for example, when a new neighbor is detected when the switch is already supporting the maximum number of neighbors. Refer to "Neighbor Maximum" on page 15-70.*

Neighbor Entries AgeOut Count: *Shows the number of LLDP neighbors dropped on all ports due to Time-to-Live expiring.*

— Continued on the next page. —

— Continued from the preceding page. —

Per-Port LLDP Counters:

NumFramesRecvd: *Shows the total number of valid, inbound LLDP advertisements received from any neighbor(s) on <port-list>. Where multiple neighbors are connected to a port through a hub, this value is the total number of LLDP advertisements received from all sources.*

NumFramesSent: *Shows the total number of LLDP advertisements sent from <port-list>.*

NumFramesDiscarded: *Shows the total number of inbound LLDP advertisements discarded by <port-list>. This can occur, for example, when a new neighbor is detected on the port, but the switch is already supporting the maximum number of neighbors. Refer to "Neighbor Maximum" on page 15-70. This can also be an indication of advertisement formatting problems in the neighbor device.*

Frames Invalid: *Shows the total number of invalid LLDP advertisements received on the port. An invalid advertisement can be caused by header formatting problems in the neighbor device.*

TLVs Unrecognized: *Shows the total number of LLDP TLVs received on a port with a type value in the reserved range. This could be caused by a basic management TLV from a later LLDP version than the one currently running on the switch.*

TLVs Discarded: *Shows the total number of LLDP TLVs discarded for any reason. In this case, the advertisement carrying the TLV may be accepted, but the individual TLV was not usable.*

Neighbor Ageouts: *Shows the number of LLDP neighbors dropped on the port due to Time-to-Live expiring.*

```
ProCurve(config)# show lldp stats

 LLDP Device Statistics

  Neighbor Entries List Last Updated : 2 hours
  New Neighbor Entries Count : 20
  Neighbor Entries Deleted Count : 20
  Neighbor Entries Dropped Count : 0
  Neighbor Entries AgeOut Count : 20

 LLDP Port Statistics

  Port  | NumFramesRecvd NumFramesSent NumFramesDiscarded
  ----- + -------------- ------------- ------------------
  1     | 628            316           0
  2     | 21             12            0
  3     | 0              252           0
  4     | 446            226           0
  5     | 0              0             0
  6     | 0              0             0
  .       .              .             .
  .       .              .             .
  .       .              .             .
```

Counters showing frames sent on a port but no frames received on that port indicates an active link with a device that either has LLDP disabled on the link or is not LLDP-aware.

Figure 15-20. Example of a Global LLDP Statistics Display

```
ProCurve(config)# show lldp stats 1

 LLDP Port Statistics Detail

  PortName : 1
  Frames Discarded  : 0
  Frames Invalid    : 0
  Frames Received   : 658
  Frames Sent       : 331
  TLVs Unrecognized : 0
  TLVs Discarded    : 0
  Neighbor Ageouts  : 0
```

Figure 15-21. Example of a Per-Port LLDP Statistics Display

LLDP Operating Notes

Neighbor Maximum. The neighbors table in the switch supports as many neighbors as there are ports on the switch. The switch can support multiple neighbors connected through a hub on a given port, but if the switch neighbor maximum is reached, advertisements from additional neighbors on the same or other ports will not be stored in the neighbors table unless some existing neighbors time-out or are removed.

LLDP Packet Forwarding: An 802.1D-compliant switch does not forward LLDP packets, regardless of whether LLDP is globally enabled or disabled on the switch.

One IP Address Advertisement Per-Port: LLDP advertises only one IP address per-port, even if multiple IP addresses are configured by **lldp config** **<** ***port-list*** **>** **ipAddrEnable** on a given port.

802.1Q VLAN Information. LLDP packets do not include 802.1Q header information, and are always handled as untagged packets.

Effect of 802.1X Operation. If 802.1X port security is enabled on a port and a connected device is not authorized, LLDP packets are not transmitted or received on that port. Any neighbor data stored in the neighbor MIB for that port prior to the unauthorized device connection remains in the MIB until it ages out. If an unauthorized device later becomes authorized, LLDP transmit and receive operation resumes.

Neighbor Data Can Remain in the Neighbor Database After the Neighbor Is Disconnected. After disconnecting a neighbor LLDP device from the switch, the neighbor can continue to appear in the switch's neighbor database for an extended period if the neighbor's **holdtime-multiplier** is high; especially if the **refresh-interval** is large. Refer to "Changing the Time-to-Live for Transmitted Advertisements" on page 15-38.

Mandatory TLVs. All mandatory TLVs required for LLDP operation are also mandatory for LLDP-MED operation.

Determining the 5300xl Port Number Included in Topology Change Notification Traps. Enabling topology change notification on a 5300xl switch port and then connecting or disconnecting an LLDP-MED endpoint on that port causes the switch to send an SNMP trap to notify the designated management station(s). The port number included in the trap corresponds to the internal number the switch maintains for the designated port, and not the port's external (slot/number) identity. To match the port's external slot/number to the internal port number appearing in an SNMP trap, use the **walkmib ifDescr** command, as shown in the following figure:

```
ProCurve# walkmib ifDescr
ifDescr.1 = A1
ifDescr.2 = A2
ifDescr.3 = A3
.
.
.
ifDescr.23 = A23
ifDescr.24 = A24
ifDescr.27 = B1
ifDescr.28 = B2
ifDescr.29 = B3
.
.
.
ifDescr.48 = B22
ifDescr.49 = B23
ifDescr.50 = B24
.
.
.
```

Beginning and Ending of Port Number Listing for Slot A

Beginning and Ending of Port Number Listing for Slot B

Figure 15-22. Matching Internal Port Numbers to External Slot/Port Numbers

LLDP and CDP Data Management

This section describes points to note regarding LLDP (Link-Layer Discovery Protocol) and CDP (Cisco Discovery Protocol) data received by the switch from other devices. LLDP operation includes both transmitting LLDP packets to neighbor devices and reading LLDP packets received from neighbor devices. CDP operation is limited to reading incoming CDP packets from neighbor devices. (ProCurve switches do not generate CDP packets.)

LLDP and CDP Neighbor Data

With both LLDP and (read-only) CDP enabled on a switch port, the port can read both LLDP and CDP advertisements, and stores the data from both types of advertisements in its neighbor database. (The switch only *stores* CDP data that has a corresponding field in the LLDP neighbor database.) The neighbor database itself can be read by either LLDP or CDP methods or by using the **show lldp** commands. Take note of the following rules and conditions:

- If the switch receives both LLDP and CDP advertisements on the same port from the same neighbor the switch stores this information as two separate entries if the advertisements have differences chassis ID and port ID information.
- If the chassis and port ID information are the same, the switch stores this information as a single entry. That is, LLDP data overwrites the corresponding CDP data in the neighbor database if the chassis and port ID information in the LLDP and CDP advertisements received from the same device is the same.
- Data read from a CDP packet does not support some LLDP fields, such as “System Descr”, “SystemCapSupported”, and “ChassisType”. For such fields, LLDP assigns relevant default values. Also:
  - The LLDP “System Descr” field maps to CDP’s “Version” and “Platform” fields.
  - The switch assigns “ChassisType” and “PortType” fields as “local” for both the LLDP and the CDP advertisements it receives.
  - Both LLDP and CDP support the “System Capability” TLV. However, LLDP differentiates between what a device is capable of supporting and what it is actually supporting, and separates the two types of information into subelements of the System Capability TLV. CDP has only a single field for this data. Thus, when CDP System Capability data is mapped to LLDP, the same value appears in both LLDP System Capability fields.
  - System Name and Port Descr are not communicated by CDP, and thus are not included in the switch’s Neighbors database.

Note

Because ProCurve switches do not generate CDP packets, they are not represented in the CDP data collected by any neighbor devices running CDP.

A switch with CDP disabled forwards the CDP packets it receives from other devices, but does not store the CDP information from these packets in its own MIB.

LLDP data transmission/collection and CDP data collection are both enabled in the switch’s default configuration. In this state, an SNMP network management application designed to discover devices running either CDP or LLDP can retrieve neighbor information from the switch regardless of whether LLDP or CDP is used to collect the device-specific information.

Protocol State	Packet Generation	Inbound Data Management	Inbound Packet Forwarding
CDP Enabled[1]	n/a	Store inbound CDP data.	No forwarding of inbound CDP packets.
CDP Disabled	n/a	No storage of CDP data from neighbor devices.	Floods inbound CDP packets from connected devices to outbound ports.
LLDP Enabled[1]	Generates and transmits LLDP packets out all ports on the switch.	Store inbound LLDP data.	No forwarding of inbound LLDP packets.
LLDP Disabled	No packet generation.	No storage of LLDP data from neighbor devices.	No forwarding of inbound LLDP packets.

[1] Both CDP data collection and LLDP transmit/receive are enabled in the default configuration. If a switch receives CDP packets and LLDP packets from the same neighbor device on the same port, it stores and displays the two types of information separately if the chassis and port ID information in the two types of advertisements is different. In this case, if you want to use only one type of data from a neighbor sending both types, disable the unwanted protocol on either the neighbor device or on the switch. However, if the chassis and port ID information in the two types of advertisements is the same, the LLDP information overwrites the CDP data for the same neighbor device on the same port.

CDP Operation and Commands

By default the switches covered by this guide have CDP enabled on each port. This is a read-only capability, meaning that the switch can receive and store information about adjacent CDP devices but does not generate CDP packets.

When a CDP-enabled switch receives a CDP packet from another CDP device, it enters that device's data in the CDP Neighbors table, along with the port number where the data was received (and does not forward the packet). The switch also periodically purges the table of any entries that have expired. (The hold time for any data entry in the switch's CDP Neighbors table is configured in the device transmitting the CDP packet, and cannot be controlled in the switch receiving the packet.) A switch reviews the list of CDP neighbor entries every three seconds, and purges any expired entries.

Command	Page
show cdp	15-75
show cdp neighbors [< *port-list* > detail] [detail < *port-list* >]	15-76
[no] cdp run	15-77
[no] cdp enable < *port-list* >	15-77

Note

For details on how to use an SNMP utility to retrieve information from the switch's CDP Neighbors table maintained in the switch's MIB (Management Information Base), refer to the documentation provided with the particular SNMP utility.

Viewing the Switch's Current CDP Configuration. CDP is shown as enabled/disabled both globally on the switch and on a per-port basis.

Syntax: show cdp

Lists the switch's global and per-port CDP configuration.

The following example shows the default CDP configuration.

```
ProCurve(config)# show cdp
  Global CDP information
   Enable CDP [Yes] : Yes


   Port CDP
   ---- --------
   A1   enabled
   A2   enabled
   A3   enabled
    .       .
    .       .
    .       .
```

Figure 15-23. Example of Show CDP with the Default CDP Configuration

Viewing the Switch's Current CDP Neighbors Table. Devices are listed by the port on which they were detected.

Syntax: show cdp neighbors

Lists the neighboring CDP devices the switch detects, with a subset of the information collected from the device's CDP packet.

[[e] port-numb [detail]]

Lists the CDP device connected to the specified port. (Allows only one port at a time.) Using **detail** *provides a longer list of details on the CDP device the switch detects on the specified port.*

[detail [[e] port-num]]

Provides a list of the details for all of the CDP devices the switch detects. Using port-num *produces a list of details for the selected port.*

Figure 15-24 lists CDP devices that the switch has detected by receiving their CDP packets.

```
ProCurve> show cdp neighbors
 CDP neigbors information
  Port Device ID                        | Platform                      Capability
  ---- ------------------------------ + ---------------------------- ----------
  A1   Accounting(0030c1-7fcc40)        | J4812A ProCurve Switch...     S
  A2   Research(0060b0-889e43)          | J4121A ProCurve Switch...     S
  A4   Support(0060b0-761a45)           | J4121A ProCurve Switch...     S
  A7   Marketing(0030c5-38dc59)         | J4813A ProCurve Switch...     S
  A12  Mgmt NIC(099a05-09df9b           | NIC Model X666                H
  A12  Mgmt NIC(099a05-09df11           | NIC Model X666                H
```

Figure 15-24. Example of CDP Neighbors Table Listing

Enabling CDP Operation. Enabling CDP operation (the default) on the switch causes the switch to add entries to its CDP Neighbors table for any CDP packets it receives from other neighboring CDP devices.

Disabling CDP Operation. Disabling CDP operation clears the switch's CDP Neighbors table and causes the switch to drop inbound CDP packets from other devices without entering the data in the CDP Neighbors table.

Syntax: [no] cdp run

Enables or disables CDP read-only operation on the switch. (Default: Enabled)

For example, to disable read-only CDP on the switch:

```
ProCurve(config)# no cdp run
```

When CDP is disabled:

- **show cdp neighbors** displays an empty CDP Neighbors table
- **show cdp** displays

  Global CDP information
  Enable CDP [Yes]: No

Enabling or Disabling CDP Operation on Individual Ports. In the factory-default configuration, the switch has all ports enabled to receive CDP packets. Disabling CDP on a port causes it to drop inbound CDP packets without recording their data in the CDP Neighbors table.

Syntax: [no] cdp enable < [e] port-list >

For example, to disable CDP on port A1:

```
ProCurve(config)# no cdp enable a1
```

—This page is intentionally unused—

File Transfers

Contents

Overview A-3

Downloading Switch Software A-3

General Software Download Rules A-4

Using TFTP To Download Switch Software from a Server A-4

Menu: TFTP Download from a Server to Primary Flash A-5

CLI: TFTP Download from a Server to Flash A-6

Using Secure Copy and SFTP A-8

How It Works A-9

The SCP/SFTP Process A-10

Disable TFTP and Auto-TFTP for Enhanced Security A-10

Command Options A-13

Authentication A-14

SCP/SFTP Operating Notes A-14

Using Xmodem to Download Switch Software From a PC or UNIX Workstation A-16

Menu: Xmodem Download to Primary Flash A-16

CLI: Xmodem Download from a PC or UNIX Workstation to Primary or Secondary Flash A-17

Switch-to-Switch Download A-18

Menu: Switch-to-Switch Download to Primary Flash A-18

CLI: Switch-To-Switch Downloads A-19

Using PCM+ to Update Switch Software A-21

Troubleshooting TFTP Downloads A-21

Transferring Switch Configurations and ACL Command Files . . A-23

TFTP: Copying a Configuration from a Remote Host A-23

TFTP: Copying a Configuration File to a Remote Host A-24

TFTP: Uploading an ACL Command File from a TFTP Server A-24

Xmodem: Copying a Configuration File from the Switch to a Serially Connected PC or UNIX Workstation A-27

Xmodem: Copying a Configuration File from a Serially Connected PC or UNIX Workstation A-27

Copying Diagnostic Data to a Remote Host, PC, or UNIX Workstation A-29

Copying Command Output to a Destination Device A-29

Copying Event Log Output to a Destination Device A-30

Copying Crash Data Content to a Destination Device A-30

Copying Crash Log Data Content to a Destination Device A-31

Overview

You can download new switch software, upload or download switch configuration files, and upload command files for configuring Access Control Lists (ACLs).

This appendix includes the following information:

- Downloading switch software (begins below)
- Transferring switch configurations (begins on page A-23)
- Uploading ACL command files (page A-24)

Note that this manual uses the terms *switch software* and *software image* to refer to the downloadable software files of the type the switch uses to operate its networking features. Other terms sometimes used for the same purpose are *Operating System*, or *OS*.

For information on how switch memory operates, including primary and secondary flash, see Chapter 6, “Switch Memory and Configuration”.

Downloading Switch Software

ProCurve periodically provides switch software updates through the ProCurve Networking web site. For more information, refer to the support and warranty booklet shipped with the switch, or visit **www.procurve.com** and click on **software updates**. After you acquire a new switch software version, you can use one of the following methods for downloading the software to the switch:

Software Download Features

Feature	Default	Menu	CLI	Web
TFTP	n/a	page A-5	page A-6	—
Xmodem	n/a	page A-16	page A-17	—
Switch-to-Switch	n/a	page A-18	page A-19	
Software Update Manager in PCM+	Refer to the documentation provided with PCM+.			

General Software Download Rules

- Switch software that you download via the menu interface always goes to primary flash.
- After a software download, you must reboot the switch to implement the new software. Until a reboot occurs, the switch continues to run on the software it was using before the download commenced.

Note

Downloading new switch software does not change the current switch configuration. The switch configuration is contained in separate files that can also be transferred. See "Transferring Switch Configurations" on page A-23.

In most cases, if a power failure or other cause interrupts a flash image download, the switch reboots with the image previously stored in primary flash. In the unlikely event that the primary image is corrupted (which may occur if a download is interrupted by a power failure), the switch goes into boot ROM mode. In this case, use the boot ROM console to download a new image to primary flash. See "Restoring a Flash Image" on page C-58.

Using TFTP To Download Switch Software from a Server

This procedure assumes that:

- A software version for the switch has been stored on a TFTP server accessible to the switch. (The software file is typically available from the ProCurve Networking web site at **www.procurve.com**.)
- The switch is properly connected to your network and has already been configured with a compatible IP address and subnet mask.
- The TFTP server is accessible to the switch via IP.

Before you use the procedure, do the following:

- Obtain the IP address of the TFTP server in which the software file has been stored.
- If VLANs are configured on the switch, determine the name of the VLAN in which the TFTP server is operating.
- Determine the name of the software file stored in the TFTP server for the switch (for example, E0820.swi).

Note

If your TFTP server is a UNIX workstation, *ensure that the case (upper or lower) that you specify for the filename is the same case as the characters in the software filenames on the server.*

Menu: TFTP Download from a Server to Primary Flash

Note that the menu interface accesses only the primary flash.

1. In the console Main Menu, select **Download OS** to display the screen in figure A-A-1. (The term “OS”, or “operating system” refers to the switch software):

```
==========================- CONSOLE - MANAGER MODE -============================
                                Download OS

  Current Firmware revision : E.08.00

  Method [TFTP] : TFTP
  TFTP Server :

  Remote File Name :



 Actions->   Cancel     Edit     eXecute     Help

Select the file transfer method (TFTP and XMODEM are currently supported).
Use arrow keys to change field selection, <Space> to toggle field choices,
and <Enter> to go to Actions.
```

Figure A-1. Example of a Download OS (Software) Screen (Default Values)

2. Press **[E]** (for **Edit**).
3. Ensure that the **Method** field is set to **TFTP** (the default).
4. In the **TFTP Server** field, type in the IP address of the TFTP server in which the software file has been stored.
5. In the **Remote File Name** field, type the name of the software file. If you are using a UNIX system, remember that the filename is case-sensitive.
6. Press **[Enter],** then **[X]** (for **eXecute**) to begin the software download. The following screen then appears:

```
==========================- CONSOLE - MANAGER MODE -============================
                                Download OS
  Current Firmware revision : E.08.00
  Method [TFTP] : TFTP
  TFTP Server : 10.28.227.105

  Remote File Name : E_08_01.swi


             Received 370,000 bytes of OS download.
  +-------------------------------------------------------------------+
  |*******************                                                |
  +-------------------------------------------------------------------+
```

Figure A-2. Example of the Download OS (Software) Screen During a Download

A "progress" bar indicates the progress of the download. When the entire software file has been received, all activity on the switch halts and you will see **Validating and writing system software to FLASH...**

7. After the primary flash memory has been updated with the new software, you must reboot the switch to implement the newly downloaded software. Return to the Main Menu and press **[6]** (for **Reboot Switch**). You will then see this prompt:

   `Continue reboot of system?  :  No`

   Press the space bar once to change `No` to `Yes`, then press **[Enter]** to begin the reboot.

Note

When you use the menu interface to download a switch software, the new image is always stored in primary flash. Also, using the Reboot Switch command in the Main Menu always reboots the switch from primary flash. Rebooting the switch from the CLI gives you more options. See "Rebooting the Switch" on page 6-18.

8. After you reboot the switch, confirm that the software downloaded correctly:
   a. From the Main Menu, select **1. Status and Counters**, and from the Status and Counters menu, select **1. General System Information**
   b. Check the **Firmware revision** line.

CLI: TFTP Download from a Server to Flash

Syntax: copy tftp flash <*ip-address*> <*remote-file*> [< primary | secondary >]

This command automatically downloads a switch software file to primary or secondary flash. Note that if you do not specify the flash destination, the Xmodem download defaults to primary flash.

For example, to download a switch software file named E0800.swi from a TFTP server with the IP address of 10.28.227.103 to primary flash:

1. Execute **copy** as shown below:

```
ProCurve# copy tftp flash 10.28.227.103 e0800.swi
The Primary OS Image will be deleted, continue [y/n]? Y
01431K
```

Dynamic counter continually displays the number of bytes transferred.

This message means that the image you want to upload will replace the image currently in primary flash.

Figure A-3. Example of the Command to Download an OS (Switch Software)

2. When the switch finishes downloading the software file from the server, it displays this progress message:

   Validating and Writing System Software to FLASH …

3. When the download finishes, you must reboot the switch to implement the newly downloaded software image. To do so, use one of the following commands:

Syntax: boot system flash < primary | secondary >

Boots from the selected flash.

Syntax: reload

Boots from the flash image and startup-config file. On a 5300xl switch running software release E.09.xx or greater (with multiple configuration files), also uses the current startup-config file.

(For more on these commands, refer to "Rebooting the Switch" on page 6-18.)

4. To confirm that the software downloaded correctly, execute **show system** and check the Firmware revision line.

If you need information on primary/secondary flash memory and the boot commands, see "Using Primary and Secondary Flash Image Options" on page 6-13.

Using Secure Copy and SFTP

For some situations you may want to use a secure method to issue commands or copy files to the switch. By opening a secure, encrypted SSH session you can then use a third-party software application to take advantage of Secure Copy (SCP) and Secure ftp (SFTP). SCP and SFTP provide a secure alternative to TFTP for transferring information that may be sensitive (like switch configuration files) to and from the switch. Essentially you are creating a secure SSH tunnel as a way to transfer files with SFTP and SCP channels.

To use these commands you must install on the administrator workstation a third-party application software client that supports the SFTP and/or SCP functions. Some examples of software that supports SFTP and SCP are PuTTY, Open SSH, WinSCP, and SSH Secure Shell. Most of these are freeware and may be downloaded without cost or licensing from the internet. There are differences in the way these clients work, so be sure you also download the documentation.

As described earlier in this chapter you can use a TFTP client on the administrator workstation to update software images. This is a plain text mechanism and it connects to a standalone TFTP server or another ProCurve switch acting as a TFTP server to obtain the software image file(s). Using SCP and SFTP allows you to maintain your switches with greater security. You can also roll out new software images with automated scripts that make it easier to upgrade multiple switches simultaneously and securely.

SFTP (secure file transfer protocol) is unrelated to FTP, although there are some functional similarities. Once you set up an SFTP session through an SSH tunnel, some of the commands are the same as FTP commands. Certain commands are not allowed by the SFTP server on the switch, such as those that create files or folders. If you try to issue commands such as **create** or **remove** using SFTP the switch server returns an error message.

You can use SFTP just as you would TFTP to transfer files to and from the switch, but with SFTP your file transfers are encrypted and require authentication, so they are more secure than they would be using TFTP. SFTP works only with SSH version 2 (SSH v2).

Note

SFTP over SSH version 1 (SSH v1) is not supported. A request from either the client or the switch (or both) using SSH v1 generates an error message. The actual text of the error message differs, depending on the client software in use. Some examples are:

```
Protocol major versions differ: 2 vs. 1
Connection closed
```

```
Protocol major versions differ: 1 vs. 2
Connection closed
```

```
Received disconnect from <ip-addr>: /usr/local/
libexec/sftp-server: command not supported
Connection closed
```

SCP (secure copy) is an implementation of the BSD **rcp** (Berkeley UNIX remote copy) command tunneled through an SSH connection.

SCP is used to copy files to and from the switch when security is required. SCP works with both SSH v1 and SSH v2. Be aware that the most third-party software application clients that support SCP use SSHv1.

How It Works

The general process for using SCP and SFTP involves three steps:

1. Open an SSH tunnel between your computer and the switch if you haven't already done so. (This step assumes that you have already set up SSH on the switch.)
2. Execute **ip ssh filetransfer** to tell the switch that you want to enable secure file transfer.
3. Use a third-party client application for SCP and SFTP commands.

The SCP/SFTP Process

To use SCP and SFTP:

1. Open an SSH session as you normally would to establish a secure encrypted tunnel between your computer and the switch. For more detailed directions on how to open an SSH session see the chapter titled *"Configuring Secure Shell (SSH)"* in the *Access Security Guide* for your switch. Please note that this is a one-time procedure for new switches or connections. If you have already done it once you should not need to do it a second time.
2. To enable secure file transfer on the switch (once you have an SSH session established between the switch and your computer), open a terminal window and type in the following command:

   ```
   ProCurve(config)# ip ssh filetransfer
   ```

Disable TFTP and Auto-TFTP for Enhanced Security

Beginning with software release E.10.02, using the **ip ssh filetransfer** command to enable Secure FTP (SFTP) automatically disables TFTP and auto-TFTP (if either or both are enabled).

```
ProCurve(config)# ip ssh filetransfer
Tftp and auto-tftp have been disabled.
ProCurve(config)# sho run

Running configuration:

; J4850A Configuration Editor; Created on release #E.10.02

hostname "ProCurve"
module 1 type J8161A
module 2 type J8161A
vlan 1
   name "DEFAULT_VLAN"
   untagged A1-A24,B1-B24
   ip address 10.28.234.176 255.255.240.0
   exit
ip ssh filetransfer
no tftp-enable
password manager
password operator
```

Enabling SFTP automatically disables TFTP and auto-tftp and displays this message.

Viewing the configuration shows that SFTP is enabled and TFTP is disabled.

Figure A-4. Example of Switch Configuration with SFTP Enabled

If you enable SFTP, then later disable it, TFTP and auto-TFTP remain disabled unless they are explicitly re-enabled.

Operating rules are:

- The TFTP feature is enabled by default, and can be enabled or disabled through the CLI, the Menu interface, or an SNMP application. Auto-TFTP is disabled by default and must be configured through the CLI.

```
ProCurve
========================= CONSOLE - MANAGER MODE ============================
                    Switch Configuration - System Information

  System Name : ProCurve
  System Contact :
  System Location :

  Inactivity Timeout (min) [0] : 0       MAC Age Time (sec) [300] : 300
  Inbound Telnet Enabled [Yes] : Yes     Web Agent Enabled [Yes] : Yes
  Time Sync Method [None] : TIMEP
  TimeP Mode [Disabled] : Disabled
  Tftp-enable [Yes] : Yes

  Time Zone [0] : 0
  Daylight Time Rule [None] : None

 Actions->   Cancel    Edit    Save    Help

Cancel changes and return to previous screen.
Use arrow keys to change action selection and <Enter> to execute action.
```

Enables/Disables TFTP.

Note: If SFTP is enabled, this field will be set to **No**. You cannot use this field to enable TFTP if SFTP is enabled. Attempting to do so produces an **Inconsistent value** message in the banner below the **Actions** line.

Figure A-5. Using the Menu Interface To Disable TFTP

- While SFTP is enabled, TFTP and auto-TFTP cannot be enabled from the CLI. Attempting to enable either non-secure TFTP option while SFTP is enabled produces one of the following messages in the CLI:

  ```
  SFTP must be disabled before enabling tftp.
  ```

  ```
  SFTP must be disabled before enabling auto-tftp.
  ```

  Similarly, while SFTP is enabled, TFTP cannot be enabled using an SNMP management application. Attempting to do so generates an “inconsistent value” message. (An SNMP management application cannot be used to enable or disable auto-TFTP.)

- To enable SFTP by using an SNMP management application, you must first disable TFTP and, if configured, auto-TFTP on the switch. You can use either an SNMP application or the CLI to disable TFTP, but must use the CLI to disable auto-TFTP. The following two CLI commands disable TFTP and auto-TFTP on the switch.

Syntax: no tftp-enable

This command disables all TFTP operation on the switch except for the auto-TFTP feature. To re-enable TFTP operation, use the **tftp-enable** *command. When TFTP is disabled, the instances of* **tftp** *in the CLI copy command and the Menu interface "Download OS" screen become unavailable.*

Note: *This command does* ***not*** *disable auto-TFTP operation. To disable an auto-TFTP command configured on the switch, use the* **no auto-tftp** *command described below to remove the command entry from the switch's configuration.*

Syntax: no auto-tftp

If auto-TFTP is configured on the switch, this command deletes the **auto-tftp** *entry from the switch configuration, thus preventing auto-tftp operation if the switch reboots.*

Note: *This command does not affect the current TFTP-enable configuration on the switch.*

Command Options

If you need to enable SSH v2 (which is required for SFTP) enter this command:

```
ProCurve(config)# ip ssh version 2
```

Note

As a matter of policy, administrators should *not* enable the SSHv1-only or the SSHv1-or-v2 advertisement modes. SSHv1 is supported on only some legacy switches (such as the ProCurve Series 2500 switches).

To confirm that SSH is enabled type in the command

```
ProCurve(config)# show ip ssh
```

3. Once you have confirmed that you have enabled an SSH session (with the **show ip ssh** command) you can then open your third-party software client application to begin using the SCP or SFTP commands to safely transfer files or issue commands to the switch.

If you need to disable secure file transfer:

```
ProCurve(config)# no ip ssh filetransfer
```

Authentication

Switch memory allows up to ten public keys. This means the authentication and encryption keys you use for your third-party client SCP/SFTP software can differ from the keys you use for the SSH session, even though both SCP and SFTP use a secure SSH tunnel.

Note

SSH authentication through a TACACS+ server and use of SCP or SFTP through an SSH tunnel are mutually exclusive. Thus, if the switch is configured to use TACACS+ for authenticating a secure Telnet SSH session on the switch, you cannot enable SCP or SFTP. Also, if SCP or SFTP is enabled on the switch, you cannot enable TACACS+ authentication for a secure Telnet SSH. On the 5300xl switches, the same mutual exclusion also applies to RADIUS servers. The switch displays a message similar to the following if there is an attempt to configure either option when the other is already configured:

```
RADIUS/TACACS authentication for ssh sessions and
secure file transfer(scp/sftp) may not be configured
simultaneously.
```

To provide username/password authentication on a switch providing SCP or SFTP support, use the switch's local username/password facility. Otherwise, you can use the switch's local public key for authentication.

Some clients such as PSCP (PuTTY SCP) automatically compare switch host keys for you. Other clients require you to manually copy and paste keys to the **$HOME/.ssh/known_hosts** file. Whatever SCP/SFTP software tool you use, after installing the client software you must verify that the switch host keys are available to the client.

Because the third-party software utilities you may use for SCP/SFTP vary, you should refer to the documentation provided with the utility you select before performing this process.

SCP/SFTP Operating Notes

- When an SFTP client connects, the switch provides a file system displaying all of its available files and folders. No file or directory creation is permitted by the user. Files may only be uploaded or downloaded, according to the permissions mask. All of the necessary files the switch will need are already in place on the switch. You do not need to (nor can you create) new files.

- The switch supports one SFTP session or one SCP session at a time.
- All files have read-write permission. Several SFTP commands, such as `create` or `remove`, are not allowed and return an error message. The switch displays the following files:

```
/
+---cfg
|   running-config
|   startup-config
+---log
|   crash-data
|   crash-data-a     (5304xl Only)
|   crash-data-b        "      "
|   crash-data-c        "      "
|   crash-data-d        "      "
|   crash-data-e     (5308xl Only)
|   crash-data-f        "      "
|   crash-data-g        "      "
|   crash-data-h        "      "
|   crash-log
|   crash-log-a      (5304xl Only)
|   crash-log-b         "      "
|   crash-log-c         "      "
|   crash-log-d         "      "
|   crash-log-e      (5308xl Only)
|   crash-log-f         "      "
|   crash-log-g         "      "
|   crash-log-h         "      "
|   event log
+---os
|   primary
|   secondary
\---ssh
    +---mgr_keys
    |   authorized_keys
    \---oper_keys
        authorized_keys
```

Once you have configured your switch for secure file transfers with SCP and SFTP, files can be copied to or from the switch in a secure (encrypted) environment and TFTP is no longer necessary.

Using Xmodem to Download Switch Software From a PC or UNIX Workstation

This procedure assumes that:

- The switch is connected via the Console RS-232 port to a PC operating as a terminal. (Refer to the *Installation and Getting Started Guide* you received with the switch for information on connecting a PC as a terminal and running the switch console interface.)
- The switch software is stored on a disk drive in the PC.
- The terminal emulator you are using includes the Xmodem binary transfer feature. (For example, in the HyperTerminal application included with Windows NT, you would use the **Send File** option in the **Transfer** dropdown menu.)

Menu: Xmodem Download to Primary Flash

Note that the menu interface accesses only the primary flash.

1. From the console Main Menu, select

   7. Download OS

2. Press **[E]** (for **Edit**).
3. Use the Space bar to select **XMODEM** in the **Method** field.
4. Press **[Enter],** then **[X]** (for **eXecute**) to begin the software download. The following message then appears:

   Press enter and then initiate Xmodem transfer
   from the attached computer.....

5. Press **[Enter]** and then execute the terminal emulator command(s) to begin Xmodem binary transfer. For example, using HyperTerminal:
   a. Click on **Transfer**, then **Send File**.
   b. Type the file path and name in the Filename field.
   c. In the Protocol field, select **Xmodem**.
   d. Click on the **[Send]** button.

   The download will then commence. It can take several minutes, depending on the baud rate set in the switch and in your terminal emulator.

6. After the primary flash memory has been updated with the new software, you must reboot the switch to implement the newly downloaded software. Return to the Main Menu and press **[6]** (for **Reboot Switch**). You will then see this prompt:

   `Continue reboot of system?  :  No`

   Press the space bar once to change `No` to `Yes`, then press **[Enter]** to begin the reboot.

7. To confirm that the software downloaded correctly:
   a. From the Main Menu, select

      1. Status and Counters

      1. General System Information

   b. Check the **Firmware revision** line.

CLI: Xmodem Download from a PC or UNIX Workstation to Primary or Secondary Flash

Using Xmodem and a terminal emulator, you can download a software file to either primary or secondary flash.

Syntax: copy xmodem flash [< primary | secondary >]

Downloads a software file to primary or secondary flash. If you do not specify the flash destination, the Xmodem download defaults to primary flash.

For example, to download a switch software file named E0822.swi from a PC (running a terminal emulator program such as HyperTerminal) to primary flash:

1. Execute the following command in the CLI:

```
HPswitch# copy xmodem flash
The Primary OS Image will be deleted, continue [y/n]?  y
Press 'Enter' and start XMODEM on your host...
```

2. Execute the terminal emulator commands to begin the Xmodem transfer. For example, using HyperTerminal:
   a. Click on **Transfer**, then **Send File**.
   b. Type the file path and name in the Filename field.

c. In the Protocol field, select **Xmodem**.

d. Click on the **[Send]** button.

The download can take several minutes, depending on the baud rate used in the transfer.

3. When the download finishes, you must reboot the switch to implement the newly downloaded software. To do so, use one of the following commands:

Syntax: boot system flash <primary | secondary>

Reboots from the selected flash.

Syntax: reload

Reboots from the flash image currently in use.

(For more on these commands, see "Rebooting the Switch" on page 6-18.)

4. To confirm that the software downloaded correctly:

```
ProCurve> show system
```

Check the **Firmware revision** line. It should show the software version that you downloaded in the preceding steps.

If you need information on primary/secondary flash memory and the boot commands, see "Using Primary and Secondary Flash Image Options" on page 6-13.

Switch-to-Switch Download

You can use TFTP to transfer a software image between two switches of the same series. (For example, all of the Series 5300xl switches use software with the "E" identifier, such as E.08.40.swi, all of the Series 3400cl and Series 6400cl switches use software with the "M" identifier, such as M.08.01, and all of the Series 4200vl switches use the "L" identifier, such as L.10.xx.) The menu interface enables you to transfer primary-to-primary or secondary-to-primary. The CLI enables all combinations of flash location options.

Menu: Switch-to-Switch Download to Primary Flash

Using the menu interface, you can download a switch software file from either the primary or secondary flash of one switch to the primary flash of another switch of the same series.

1. From the switch console Main Menu in the switch to receive the download, select **7. Download OS** screen.
2. Ensure that the **Method** parameter is set to **TFTP** (the default).
3. In the **TFTP Server** field, enter the IP address of the remote switch containing the software file you want to download.
4. For the **Remote File Name**, enter one of the following:
   - To download the software in the primary flash of the source switch, type "**flash**" in lowercase characters.
   - To download the software in the secondary flash of the source switch, type
     /os/secondary.
5. Press **[Enter]**, then **[X]** (for **eXecute**) to begin the software download.
6. A "progress" bar indicates the progress of the download. When the entire switch software download has been received, all activity on the switch halts and the following messages appear:

   Validating and writing system software to FLASH...
7. After the primary flash memory has been updated with the new software, you must reboot the switch to implement the newly downloaded software. Return to the Main Menu and press **[6]** (for **Reboot Switch**). You will then see this prompt:

   ```
   Continue reboot of system?  :  No
   ```

   Press the space bar once to change `No` to `Yes`, then press **[Enter]** to begin the reboot.
8. To confirm that the software downloaded correctly:
   a. From the Main Menu, select

      Status and Counters

      General System Information

   b. Check the **Firmware revision** line.

CLI: Switch-To-Switch Downloads

Where two switches in your network belong to the same series, you can download a software image between them by initiating a **copy tftp** command from the destination switch. (For example, all of the Series 5300xl switches use software with the "E" identifier, such as E.08.40.swi, all of the Series 3400cl

and Series 6400cl switches use software with the “M” identifier, such as M.08.01 and all of the Series 4200vl switches use the “L” identifier, such as L.10.xx.) The options for this CLI feature include:

- Copy from primary flash in the source to either primary or secondary in the destination.
- Copy from either primary or secondary flash in the source to either primary or secondary flash in the destination.

Downloading from Primary Only.

Syntax: copy tftp flash < *ip-addr* > flash [primary | secondary]

This command (executed in the destination switch) downloads the software flash in the source switch’s primary flash to either the primary or secondary flash in the destination switch.

If you do not specify either a primary or secondary flash location for the destination, the download automatically goes to primary flash.

For example, to download a software file from primary flash in a with an IP address of 10.29.227.103 to the primary flash in the destination switch, you would execute the following command in the destination switch’s CLI:

```
ProCurve# copy tftp flash 10.29.227.103 flash
Device will be rebooted, do you want to continue [y/n] Y
00107K
```

Running Total of Bytes Downloaded

Figure A-6. Switch-To-Switch, from Primary in Source to Either Flash in Destination

Downloading from Either Flash in the Source Switch to Either Flash in the Destination Switch.

Syntax: copy tftp flash < *ip-addr* > < /os/primary > | < /os/secondary > [primary | secondary]

This command (executed in the destination switch) gives you the most options for downloading between switches. If you do not specify either a primary or secondary flash location for the destination, the download automatically goes to primary flash.

For example, to download a software file from secondary flash in a switch with an IP address of 10.28.227.103 to the secondary flash in a destination switch, you would execute the following command in the destination switch's CLI:

```
ProCurve# copy tftp flash 10.29.227.103 /os/secondary secondary
Device will be rebooted, do you want to continue [y/n] Y
01084K
```

Figure A-7. Switch-to-Switch, from Either Flash in Source to Either Flash in Destination

Using PCM+ to Update Switch Software

ProCurve Manager Plus includes a software update utility for updating on ProCurve switch products such as the 5300xl and 4200vl. (PCM+ version 1.6 and greater will offer this feature for the 3400cl switches and 6400 switches beginning in December, 2004. PCM+ version 2.0.1 will offer this feature for the 4200vl switches.) For further information, refer to the *Getting Started Guide* and the *Administrator's Guide*, provided electronically with the application.

Troubleshooting TFTP Downloads

When using the menu interface, if a TFTP download fails, the Download OS (Operating System, or software) screen indicates the failure.

Message Indicating cause of TFTP Download Failure

```
========================== CONSOLE - MANAGER MODE ============================
                                Download OS

  Current Firmware revision : E.08.00

  Method [TFTP] : TFTP
  TFTP Server : 10.29.227.105

  Remote File Name : os

              Received 0 bytes of OS download.
  +-------------------------------------------------------------------+
  |                                                                   |
  +-------------------------------------------------------------------+

Connection to 10.29.227.105 failed

                         Press any key to continue
```

Figure A-8. Example of Message for Download Failure

To find more information on the cause of a download failure, examine the messages in the switch's Event Log by executing this CLI command:

```
ProCurve# show log tftp
```

(For more on the Event Log, see "Using the Event Log To Identify Problem Sources" on "Using the Event Log To Identify Problem Sources" on page C-27.)

Some of the causes of download failures include:

- Incorrect or unreachable address specified for the **TFTP Server** parameter. This may include network problems.
- Incorrect VLAN.
- Incorrect name specified for the **Remote File Name** parameter, or the specified file cannot be found on the TFTP server. This can also occur if the TFTP server is a UNIX machine and the case (upper or lower) for the filename on the server does not match the case for the filename entered for the **Remote File Name** parameter in the **Download OS** (Operating System, or software) screen.
- One or more of the switch's IP configuration parameters are incorrect.
- For a UNIX TFTP server, the file permissions for the software file do not allow the file to be copied.
- Another console session (through either a direct connection to a terminal device or through Telnet) was already running when you started the session in which the download was attempted.

Note

If an error occurs in which normal switch operation cannot be restored, the switch automatically reboots itself. In this case, an appropriate message is displayed after the switch reboots.

Transferring Switch Configurations and ACL Command Files

Transfer Features

Feature	Default	Menu	CLI	Web
Use TFTP to copy from a remote host to a config file.	n/a	—	below	—
Use TFTP to copy a config file to a remote host.	n/a	—	page A-24	—
Use TFTP to upload and execute a command file for configuring or replacing an ACL in the switch configuration.	n/a	—	page A-24	—
Use Xmodem to copy a configuration from a serially connected host to a config file.	n/a	—	page A-27	—
Use Xmodem to copy a config file to a serially connected host.	n/a	—	page A-27	—

Using the CLI commands described in this section, you can copy switch configurations to and from a switch, or copy an ACL command file to configure or replace an ACL in the switch configuration.

Note

It is useful to note here that you can perform all TFTP operations using SFTP as described in the section on *Using Secure Copy and SFTP* on page A-8 for greater security, if needed.

TFTP: Copying a Configuration from a Remote Host

Syntax: copy tftp < startup-config | running-config > < *ip-address* > < *remote-file* > [pc | unix]
copy tftp config < *filename* > < *ip-address* > < *remote-file* > [pc | unix]

All Switches: *This command copies a configuration from a remote host to the startup-config or running-config file.*

5300xl and 4200vl: *On a 5300xl switch running software release E.09.xx or greater or on a 4200vl switch, this command can copy a configuration from a remote host to a designated config file in the switch. For more on multiple configuration files, refer to "Multiple Configuration Files on 5300xl and 4200vl Switches" on page 6-22.*

(Refer to "Using Primary and Secondary Flash Image Options" on page 6-13 for more on flash image use.)

For example, to download a configuration file named **sw5300** in the **configs** directory on drive "**d**" in a remote host having an IP address of 10.28.227.105:

```
ProCurve# copy tftp startup-config 10.28.227.105
          d:\configs\sw2512
```

TFTP: Copying a Configuration File to a Remote Host

Syntax: copy < startup-config | running-config > tftp < *ip-addr* > < *remote-file* > [pc | unix]

copy config < *filename* > tftp < *ip-addr* > < *remote-file* > [pc | unix]

All Switches: *This command copies the switch's startup configuration (startup-config file) or running configuration (running-config file) to a TFTP server.*

5300xl or 4200vl: *On a 5300xl switch running software release E.09.xx or greater or on a 4200vl switch, this command can copy a designated config file in the switch to a TFTP server. For more on multiple configuration files, refer to "Multiple Configuration Files on 5300xl and 4200vl Switches" on page 6-22.*

For example, to upload the current startup configuration to a file named **sw5300** in the configs directory on drive "**d**" in a TFTP server having an IP address of 10.28.227.105:

```
HPswitch# copy startup-config tftp 10.28.227.105
          d:\configs\sw5300
```

TFTP: Uploading an ACL Command File from a TFTP Server

This section describes how to upload and execute a command file to the switch for configuring or replacing an Access Control List (ACL) in the switch configuration. Such files should contain only ACE (Access Control Entry) commands. For an example of creating an ACL command file offline, refer to

"Working Offline To Create or Edit an ACL" in the "Access Control Lists (ACLs) chapter of the *Advanced Traffic Management Guide* for your switch.

Syntax: copy tftp command-file < *ip-addr* > < *filename*.txt > < unix | pc >

where:

< *ip-addr* > = *The IP address of a TFTP server available to the switch*

< *filename.txt* > = *A text file containing ACL commands and stored in the TFTP directory of the server identified by* < *ip-addr* >

< unix | pc > = *The type of workstation used for serial, Telnet, or SSH access to the switch CLI*

This command copies and executes the named text file from the specified TFTP server address and executes the ACL commands in the file. Depending on the ACL commands used, this action does one of the following in the running-config file:

- *Creates a new ACL.*
- *Replaces an existing ACL. (Refer to "Creating an ACL Offline" in the "Access Control Lists (ACLs)" chapter in the Advanced Traffic Management Guide for your switch.)*
- *Adds to an existing ACL.*

For example, suppose you:

1. Created an ACL command file named **vlan10_in.txt** to update an existing ACL.
2. Copied the file to a TFTP server at 18.38.124.16.

Using a PC workstation, you then execute the following from the CLI to upload the file to the switch and implement the ACL commands it contains:

```
ProCurve(config)# copy tftp command-file 18.38.124.16
vlan10_in.txt pc
```

The switch displays this message:

```
Running configuration may change, do you want to continue
[y/n]?
```

To continue with the upload, press the **[Y]** key. To abort the upload, press the **[N]** key. Note that if the switch detects an illegal (non-ACL) command in the file, it bypasses the illegal command, displays a notice as shown in figure A-A-9, and continues to implement the remaining ACL commands in the file.

```
ProCurve(config)# copy tftp command-file 18.38.124.18 vlan10_in.txt pc
Running configuration may change, do you want to continue [y/n]?  y
  1. ip access-list extended "155"
  2. deny tcp 0.0.0.0 255.255.255.255 10.10.10.2 0.0.0.0 eq 23 log
  3. permit ip 0.0.0.0 255.255.255.255 0.0.0.0 255.255.255.255
  4. show running
Command files are limited to access-list commands.
  5. exit
 ProCurve(config)# show running

Running configuration:

; J4850A Configuration Editor; Created on release #E.08.00

hostname " ProCurve "
cdp run
module 1 type J4820A
ip default-gateway 18.38.248.1
logging 18.38.227.2
snmp-server community "public" Unrestricted
ip access-list extended "155"
   deny tcp 0.0.0.0 255.255.255.255 10.10.10.2 0.0.0.0 eq 23 log
   permit ip 0.0.0.0 255.255.255.255 0.0.0.0 255.255.255.255
   exit
   :
   :
```

This message indicates that "show running" command just above it is not an ACL command and will be ignored by the switch.

Manually executing **show running** from the CLI indicates that the file was implemented, creating ACL 155 in the switch's running configuration.

Figure A-9. Example of Using the Copy Command to Download and Configure an ACL

For more on this general topic, including an example of an ACL command file created offline, refer to the section titled "Editing ACLs and Creating an ACL Offline" in the "Access Control Lists (ACLs)" chapter of the *Advanced Traffic Management Guide* for your switch.

Xmodem: Copying a Configuration File from the Switch to a Serially Connected PC or UNIX Workstation

To use this method, the switch must be connected via the serial port to a PC or UNIX workstation. You will need to:

- Determine a filename to use.
- Know the directory path you will use to store the configuration file.

Syntax: copy < startup-config | running-config > xmodem < pc | unix >
copy config < *filename* > xmodem < pc | unix >

All Switches: *Uses Xmodem to copy a startup-config or running-config file from the switch to a PC or Unix workstation.*

5300xl and 4200vl: *A 5300xl switch running software release E.09.xx or greater, or a 4200vl switch, uses Xmodem to copy a designated configuration file from the switch to a PC or Unix workstation. For more on multiple configuration files, refer to* *"Multiple Configuration Files on 5300xl and 4200vl Switches" on page 6-22.*

For example, to copy a configuration file to a PC serially connected to the switch:

1. Determine the file name and directory location on the PC.
2. Execute the following command:

```
HPswitch# copy startup-config xmodem pc
Press 'Enter' and start XMODEM on your host...
```

3. After you see the above prompt, press **[Enter]**.
4. Execute the terminal emulator commands to begin the file transfer.

Xmodem: Copying a Configuration File from a Serially Connected PC or UNIX Workstation

To use this method, the switch must be connected via the serial port to a PC or UNIX workstation on which is stored the configuration file you want to copy. To complete the copying, you will need to know the name of the file to copy and the drive and directory location of the file.

Syntax: copy xmodem startup-config < pc | unix >
copy xmodem config < *filename* > < pc | unix >

All Switches: *Copies a configuration file from a serially connected PC or UNIX workstation to the switch's startup-config file.*

5300xl and 4200vl: *5300xl switches running software release E.09.xx or greater, and 4200vl switches, copy a configuration file from a serially connected PC or UNIX workstation to a designated configuration file on the switch. For more on multiple configuration files, refer to "Multiple Configuration Files on 5300xl and 4200vl Switches" on page 6-22.*

For example, to copy a configuration file from a PC serially connected to the switch:

1. Execute the following command:

```
ProCurve# copy xmodem startup-config pc
Device will be rebooted, do you want to continue [y/n]?  y
Press 'Enter' and start XMODEM on your host...
```

2. After you see the above prompt, press **[Enter]**.
3. Execute the terminal emulator commands to begin the file transfer.
4. When the download finishes, you must reboot the switch to implement the newly downloaded software. To do so, use one of the following commands:

Syntax: boot system flash [primary | secondary]
boot system flash [config < *filename* >

All Switches: *Boots from the selected flash.*

5300xl and4200vl: *5300xl switches running software release E.09.xx or greater, and 4200vl switches, boot from the designated configuration file. For more on multiple configuration files, see "Multiple Configuration Files on 5300xl and 4200vl Switches" on page 6-22.*

Syntax: reload

Reboots from the flash image currently in use.

(For more on these commands, see "Rebooting the Switch" on page 6-18.)

Copying Diagnostic Data to a Remote Host, PC, or UNIX Workstation

You can use the CLI to copy the following types of switch data to a text file in a management device:

- Command Output: Sends the output of a switch CLI command as a file on the destination device.
- Event Log: Copies the switch's Event Log into a file on the destination device.
- Crash Data: software-specific data useful for determining the reason for a system crash.
- Crash Log: Processor-Specific operating data useful for determining the reason for a system crash.

Copying Command Output to a Destination Device

Syntax: copy command-output < "*cli-command*" > tftp < *ip-address* > < *filepath-filename* >

copy command-output <"*cli-command*"> xmodem

These commands direct the displayed output of a CLI command to a file in a destination device.

For example, to use Xmodem to copy the output of **show config** to a serially connected PC:

At this point, press **[Enter]** and start the Xmodem command sequence in your terminal emulator.

```
ProCurve#copy command-output "show config" xmodem pc
Press 'Enter' and start XMODEM on your host...

Transfer complete
```

Indicates the operation is finished.

Figure A-10. Example of Sending Command Output to a File on an Attached PC

Note that the command you specify must be enclosed in double-quote marks.

Copying Event Log Output to a Destination Device

Syntax: copy event-log tftp < *ip-address* > < *filepath_filename* >

copy event-log xmodem

These commands use TFTP or Xmodem to copy the Event Log content to a PC or UNIX workstation on the network.

For example, to copy the event log to a PC connected to the switch:

At this point, press **[Enter]** and start the Xmodem command sequence in your terminal emulator.

```
ProCurve# copy event-log xmodem pc
Press 'Enter' and start XMODEM on your host...

Transfer complete
```

Figure A-11. Example of Sending Event Log Content to a File on an Attached PC

Copying Crash Data Content to a Destination Device

This command uses TFTP or Xmodem to copy the Crash Data content to a PC or UNIX workstation on the network. You can copy individual slot information or the master switch information. If you do not specify either, the command defaults to the master data.

Syntax: copy crash-data [<*slot-id* | master>] xmodem

copy crash-data [<*slot-id* | master>] tftp <*ip-address*> <*filename*>

where: *slot-id* = **a** - **h**, *and retrieves the crash log or crash data from the processor on the module in the specified slot.*

master *Retrieves crash log or crash data from the switch's chassis processor.*

These commands use TFTP or Xmodem to copy the Event Log content to a PC or UNIX workstation on the network.

For example, to copy the switch's crash data to a file in a PC:

At this point, press **[Enter]** and start the Xmodem command sequence in your terminal emulator. →

```
ProCurve(config)# copy crash-data xmodem pc
Press 'Enter' and start XMODEM on your host...
 :
Transfer complete
```

Figure A-12. Example of Copying Switch Crash Data Content to a PC

Copying Crash Log Data Content to a Destination Device

Syntax: copy crash-log [<*slot-id* | master>] tftp <*ip-address*> <*filepath and filename*>

copy crash-log [<*slot-id* | master>] xmodem

where: *slot-id* = **a** - **h**, *and retrieves the crash log or crash data from the processor on the module in the specified slot.*

master *Retrieves crash log or crash data from the switch's chassis processor.*

These commands use TFTP or Xmodem to copy the Crash Log content to a PC or UNIX workstation on the network. You can copy individual slot information or the master switch information. If you do not specify either, the command defaults to the master data.

For example, to copy the Crash Log for slot C to a file in a PC connected to the switch:

At this point, press **[Enter]** and start the Xmodem command sequence in your terminal emulator. →

```
ProCurve(config)# copy crash-log c xmodem
Press 'Enter' and start XMODEM on your host...

Transfer complete
```

Figure A-13. Example of sending a Crash Log for Slot C to a File on an Attached PC

—This page is intentionally unused—

B

Monitoring and Analyzing Switch Operation

Contents

Overview B-3

Status and Counters Data B-4

Menu Access To Status and Counters B-5

General System Information B-5

Menu Access B-5

CLI Access B-6

Switch Management Address Information B-6

Menu Access B-6

CLI Access B-7

Module Information B-8

Menu: Displaying Port Status B-8

CLI Access B-8

Port Status B-9

Menu: Displaying Port Status B-9

CLI Access B-9

Web Access B-9

Viewing Port and Trunk Group Statistics and Flow Control Status B-10

Menu Access to Port and Trunk Statistics B-11

CLI Access To Port and Trunk Group Statistics B-12

Web Browser Access To View Port and Trunk Group Statistics B-12

Viewing the Switch's MAC Address Tables B-13

Menu Access to the MAC Address Views and Searches B-13

CLI Access for MAC Address Views and Searches B-16

Spanning Tree Protocol (STP) Information B-17

Menu Access to STP Data B-17

CLI Access to STP Data B-18

Internet Group Management Protocol (IGMP) Status B-19

VLAN Information B-20
Web Browser Interface Status Information B-22

Interface Monitoring Features B-23
Menu: Configuring Port and Static Trunk Monitoring B-24
CLI: Configuring Port, Mesh, and Static Trunk Monitoring B-26
Web: Configuring Port Monitoring B-29

Overview

The switches covered by this guide have several built-in tools for monitoring, analyzing, and troubleshooting switch and network operation:

- **Status:** Includes options for displaying general switch information, management address data, port status, port and trunk group statistics, MAC addresses detected on each port or VLAN, and STP, IGMP, and VLAN data *(page B-4)*.
- **Counters:** Display details of traffic volume on individual ports (page B-10).
- **Event Log**: Lists switch operating events *(*"Using the Event Log To Identify Problem Sources" on page C-27*)*.
- **Alert Log:** Lists network occurrences detected by the switch—in the Status | Overview screen of the web browser interface *(*page 5-16*)*.
- **Configurable trap receivers:** Uses SNMP to enable management stations on your network to receive SNMP traps from the switch. (Refer to "SNMPv1 and SNMPv2c Trap Features" on page 15-19.)
- **Port monitoring (mirroring):** Copy all traffic from the specified ports to a designated monitoring port (page B-23).

Note

Link test and ping test—analysis tools in troubleshooting situations—are described in appendix C, "Troubleshooting". See "Diagnostic Tools" on page C-45.

Status and Counters Data

This section describes the status and counters screens available through the switch console interface and/or the web browser interface.

Note

You can access all console screens from the web browser interface via Telnet to the console. Telnet access to the switch is available in the Device View window under the **Configuration** tab.

Status or Counters Type	Interface	Purpose	Page
Menu Access to Status and Counters	Menu	Access menu interface for status and counter data.	**B-5**
General System Information	Menu, CLI	Lists switch-level operating information.	**B-5**
Management Address Information	Menu, CLI	Lists the MAC address, IP address, and IPX network number for each VLAN or, if no VLANs are configured, for the switch.	**B-6**
Module Information	Menu, CLI	Lists the module type and description for each slot in which a module is installed.	**B-8**
Port Status	Menu, CLI, Web	Displays the operational status of each port.	**B-9**
Port and Trunk Statistics and Flow Control Status	Menu, CLI, Web	Summarizes port activity and lists per-port flow control status.	**B-10**
VLAN Address Table	Menu, CLI	Lists the MAC addresses of nodes the switch has detected on specific VLANs, with the corresponding switch port.	**B-13**
Port Address Table	Menu, CLI	Lists the MAC addresses that the switch has learned from the selected port.	**B-13**
STP Information	Menu, CLI	Lists Spanning Tree Protocol data for the switch and for individual ports. If VLANs are configured, reports on a per-VLAN basis.	**B-17**
IGMP Status	Menu, CLI	Lists IGMP groups, reports, queries, and port on which querier is located.	**B-19**
VLAN Information	Menu, CLI	For each VLAN configured in the switch, lists 802.1Q VLAN ID and up/down status.	**B-20**
Port Status Overview and Port Counters	Web	Shows port utilization and counters, and the Alert Log.	**B-22**

Menu Access To Status and Counters

Beginning at the Main Menu, display the Status and Counters menu by selecting:

1. Status and Counters

```
==========================- CONSOLE - MANAGER MODE -============================
                            Status and Counters Menu

   1. General System Information
   2. Switch Management Address Information
   3. Module Information
   4. Port Status
   5. Port Counters
   6. Vlan Address Table
   7. Port Address Table
   8. Spanning Tree Information
   0. Return to Main Menu...

Displays switch management information including software versions.
To select menu item, press item number, or highlight item and press <Enter>.
```

Figure B-1. The Status and Counters Menu

Each of the above menu items accesses the read-only screens described on the following pages. Refer to the online help for a description of the entries displayed in these screens.

General System Information

Menu Access

From the console Main Menu, select:

1. Status and Counters

1. General System Information

```
==========================- CONSOLE - MANAGER MODE -============================
                 Status and Counters - General System Information

  System Contact     :
  System Location    :

  Firmware revision  : E.08.30          Base MAC Addr      : 0001e7-a09900
  ROM Version        : E.05.04          Serial Number      : S2600017409

  Up Time            : 2 hours          Memory   - Total   : 24,588,136
  CPU Util (%)       : 1                           Free    : 19,613,568

  IP Mgmt  - Pkts Rx : 0                Packet   - Total   : 832
             Pkts Tx : 0                Buffers    Free    : 793
                                                   Lowest  : 769
                          24,588,1 6               Missed  : 0


 Actions->   Back     Help

Return to previous screen.
Use arrow keys to change action selection and <Enter> to execute action.
```

Figure B-2. Example of General Switch Information

This screen dynamically indicates how individual switch resources are being used. See the online Help for details.

CLI Access

Syntax: show system-information

Switch Management Address Information

Menu Access

From the Main Menu, select:

1 Status and Counters …

2. Switch Management Address Information

```
==========================- CONSOLE - MANAGER MODE -============================
               Status and Counters - Management Address Information

  Time Server Address : Disabled

   VLAN Name    MAC Address          IP Address
  ------------  -------------------  -------------------
  DEFAULT_VLAN  0001e7-a09900        10.28.227.101
  VLAN-22       0001e7-a09900        Disabled
  VLAN-33       0001e7-a09900        Disabled


 Actions->   Back     Help

Return to previous screen.
Use arrow keys to change action selection and <Enter> to execute action.
```

Figure B-3. Example of Management Address Information with VLANs Configured

This screen displays addresses that are important for management of the switch. If multiple VLANs are *not* configured, this screen displays a single IP address for the entire switch. See the online Help for details.

Note

As shown in figure B-3, all VLANs on the switches covered by this guide use the same MAC address. (This includes both the statically configured VLANs and any dynamic VLANs existing on the switch as a result of GVRP operation.)

Also, the switches covered by this guide use a multiple forwarding database. When using multiple VLANs and connecting a switch to a device that uses a single forwarding database, such as a Switch 4000M, there are cabling and tagged port VLAN requirements. For more on this topic, refer to the section titled “Multiple VLAN Considerations” in the “Static Virtual LANs (VLANs) chapter of the *Advanced Traffic Management Guide* for your switch.

CLI Access

Syntax: show management

Module Information

Use this feature to determine which slots have modules installed and which type(s) of modules are installed.

Menu: Displaying Port Status

From the Main Menu, select:

1. Status and Counters …
3. Module Information

```
HPswitch
==============================================================================
                    Status and Counters - Module Information

  Slot    Module Type                 Module Description
  ----  ---------------  ---------------------------------------------
  A                      HP J4878A  4x MiniGBIC module
  B                      HP J4820A 10/100Base-TX module
  C                      Slot Available
  D                      Slot Available
  E                      Slot Available
  F                      Slot Available
  G                      Slot Available
  H                      Slot Available

 Actions->   Back    Help

Return to previous screen.
Use up/down arrow keys to scroll to other entries, left/right arrow keys to
change action selection, and <Enter> to execute action.
```

Figure B-4. Example of Module Information in the Menu Interface

CLI Access

Syntax: show module

Port Status

The web browser interface and the console interface show the same port status data.

Menu: Displaying Port Status

From the Main Menu, select:

1. Status and Counters …
4. Port Status

```
================================================================================
                        Status and Counters - Port Status

                      Intrusion                                   Flow
  Port     Type        Alert    Enabled  Status     Mode         Ctrl
  -----  ---------   ---------  -------  ------  -----------    -----
  A1                 No         Yes      Down                   off
  A2                 No         Yes      Down                   off
  A3                 No         Yes      Down                   off
  A4                 No         Yes      Down                   off
  B1     10/100TX    No         Yes      Up      100FDx         off
  B2     10/100TX    No         Yes      Down    10FDx          off
  B3     10/100TX    No         Yes      Down    10FDx          off
  B4     10/100TX    No         Yes      Down    10FDx          off
  B5     10/100TX    No         Yes      Down    10FDx          off
  B6     10/100TX    No         Yes      Down    10FDx          off
  B7     10/100TX    No         Yes      Down    10FDx          off

 Actions->    Back     Intrusion log     Help

Return to previous screen.
Use up/down arrow keys to scroll to other entries, left/right arrow keys to
change action selection, and <Enter> to execute action.
```

Figure B-5. Example of Port Status on the Menu Interface

CLI Access

Syntax: show interfaces brief

Web Access

1. Click on the **Status** tab.
2. Click on **[Port Status]**.

Viewing Port and Trunk Group Statistics and Flow Control Status

Feature	Default	Menu	CLI	Web
viewing port and trunk statistics for all ports, and flow control status	n/a	page B-11	page B-12	page B-12
viewing a detailed summary for a particular port or trunk	n/a	page B-11	page B-12	page B-12
resetting counters	n/a	page B-11	page B-12	page B-12

These features enable you to determine the traffic patterns for each port since the last reboot or reset of the switch. You can display:

- A general report of traffic on all LAN ports and trunk groups in the switch, along with the per-port flow control status (On or Off).
- A detailed summary of traffic on a selected port or trunk group.

You can also reset the counters for a specific port.

The menu interface and the web browser interface provide a dynamic display of counters summarizing the traffic on each port. The CLI lets you see a static "snapshot" of port or trunk group statistics at a particular moment.

As mentioned above, rebooting or resetting the switch resets the counters to zero. You can also reset the counters to zero for the current session. This is useful for troubleshooting. See the "Note On Reset", below.

Note on Reset

The **Reset** action resets the counter display to zero for the current session, but does not affect the cumulative values in the actual hardware counters. (In compliance with the SNMP standard, the values in the hardware counters are not reset to zero unless you reboot the switch.) Thus, using the **Reset** action resets the displayed counters to zero for the current session only. Exiting from the console session and starting a new session restores the counter displays to the accumulated values in the hardware counters.

Menu Access to Port and Trunk Statistics

To access this screen from the Main Menu, select:

1. Status and Counters …

4. Port Counters

```
==========================- CONSOLE - MANAGER MODE -============================
                        Status and Counters - Port Counters

                                                                          Flow
  Port      Total Bytes   Total Frames     Errors Rx      Drops Tx       Ctrl
 -------   -------------  -------------  -------------  -------------   ------
  A1            195,072            323              0              0   off
  A2            651,816            871              0              0   off
  A3-Trk1       290,163            500              0              0   off
  A4-Trk1       260,134            501              0              0   off
  C1            859,363           5147              0              0   off
  C2            674,574           1693              0              0   off
  C3             26,554            246              0              0   off
  C4            113,184            276              0              0   off
  C5                  0              0              0              0   off

 Actions->   Back     Show details     Reset     Help

Return to previous screen.
Use up/down arrow keys to scroll to other entries, left/right arrow keys to
change action selection, and <Enter> to execute action.
```

Figure B-6. Example of Port Counters on the Menu Interface

To view details about the traffic on a particular port, use the ↓ key to highlight that port number, then select **Show Details**. For example, selecting port A2 displays a screen similar to figure B-7, below.

```
==========================- CONSOLE - MANAGER MODE -============================
                   Status and Counters - Port Counters - Port A2

  Link Status      : Up

  Bytes Rx         : 630,746              Bytes Tx         : 21,070
  Unicast Rx       : 568                  Unicast Tx       : 285
  Bcast/Mcast Rx   : 18                   Bcast/Mcast Tx   : 0

  FCS Rx           : 0                    Drops Tx         : 0
  Alignment Rx     : 0                    Collisions Tx    : 0
  Runts Rx         : 0                    Late Colln Tx    : 0
  Giants Rx        : 0                    Excessive Colln  : 0
  Total Rx Errors  : 0                    Deferred Tx      : 0

 Actions->   Back     Reset     Help

Return to previous screen.
Use arrow keys to change action selection and <Enter> to execute action.
```

Figure B-7. Example of the Display for Show details on a Selected Port

This screen also includes the **Reset** action for the current session. (See the “Note on Reset” on page B-10.)

CLI Access To Port and Trunk Group Statistics

To Display the Port Counter Summary Report.

Syntax: show interfaces

This command provides an overview of port activity for all ports on the switch.

To Display a Detailed Traffic Summary for Specific Ports. .

Syntax: show interfaces < *port-list* >

This command provides traffic details for the port(s) you specify

To Reset the Port Counters for a Specific Port.

Syntax: clear statistics < *port-list* >

This command resets the counters for the specified ports to zero for the current session. (See the "Note on Reset" on page B-10.)

Web Browser Access To View Port and Trunk Group Statistics

1. Click on the **Status** tab.
2. Click on **[Port Counters]**.
3. To refresh the counters for a specific port, click anywhere in the row for that port, then click on **[Refresh]**.

Note

The reset the port counters to zero, you must reboot the switch.

Viewing the Switch's MAC Address Tables

Feature	Default	Menu	CLI	Web
viewing MAC addresses on all ports on a specific VLAN	n/a	page B-13	page B-16	—
viewing MAC addresses on a specific port	n/a	page B-15	page B-16	—
searching for a MAC address	n/a	page B-15	page B-16	—

These features help you to view:

- The MAC addresses that the switch has learned from network devices attached to the switch
- The port on which each MAC address was learned

Menu Access to the MAC Address Views and Searches

Per-VLAN MAC-Address Viewing and Searching. This feature lets you determine which switch port on a selected VLAN is being used to communicate with a specific device on the network. The per-VLAN listing includes:

- The MAC addresses that the switch has learned from network devices attached to the switch
- The port on which each MAC address was learned

1. From the Main Menu, select:

   1. Status and Counters
   5. VLAN Address Table

2. The switch then prompts you to select a VLAN.

```
Select VLAN : DEFAULT_VLAN
```

3. Use the Space bar to select the VLAN you want, then press **[Enter]**. The switch then displays the MAC address table for that VLAN:

```
==========================- CONSOLE - MANAGER MODE -============================
                       Status and Counters - Address Table

  MAC Address   Located on Port
 -------------  ---------------
 0030c1-7f49c0  A3
 0030c1-7fec40  A1
 0030c1-b29ac0  A3
 0060b0-17de5b  A3
 0060b0-880a80  A2
 0060b0-df1a00  A3
 0060b0-df2a00  A3
 0060b0-e9a200  A3
 009027-e74f90  A3
 080009-21ae84  A3
 080009-62c411  A3
 080009-6563e2  A3

 Actions->   Back    Search    Next page    Prev page    Help

Return to previous screen.
Use up/down arrow keys to scroll to other entries, left/right arrow keys to
change action selection, and <Enter> to execute action.
```

Figure B-8. Example of the Address Table

To page through the listing, use **Next page** and **Prev page**.

Finding the Port Connection for a Specific Device on a VLAN. This feature uses a device's MAC address that you enter to identify the port used by that device.

1. Proceeding from figure B-8, press **[S]** (for **Search**), to display the following prompt:

   `Enter MAC address: _`

2. Type the MAC address you want to locate and press **[Enter]**. The address and port number are highlighted if found. If the switch does not find the MAC address on the currently selected VLAN, it leaves the MAC address listing empty.

Located MAC Address and Corresponding Port Number

```
==========================- CONSOLE - MANAGER MODE -============================
                       Status and Counters - Address Table

  MAC Address   Located on Port
 -------------  ---------------
 0030c1-7fcc6d  2
 005004-17df9c  1
 0060b0-889e00  1
```

Figure B-9. Example of Menu Indicating Located MAC Address

3. Press **[P]** (for **Prev page**) to return to the full address table listing.

Port-Level MAC Address Viewing and Searching. This feature displays and searches for MAC addresses on the specified port instead of for all ports on the switch.

1. From the Main Menu, select:

   1. Status and Counters
   7. Port Address Table

```
==========================- CONSOLE - MANAGER MODE -============================
                            Status and Counters Menu

   1. General System Information
   2. Switch Management Address Information
   3. Module Information
   4. Port Status
   5. Port Counters
   6. Vlan Address Table
   7. Port Address Table
   8. Spanning Tree Information
   0. Return to Main Menu...

Select port : A1

Type port number or press <Space> to scroll ports. Press <Enter> to select.
To select menu item, press item number, or highlight item and press <Enter>.
```

Prompt for Selecting the Port To Search

Figure B-10. Listing MAC Addresses for a Specific Port

2. Use the Space bar to select the port you want to list or search for MAC addresses, then press **[Enter]** to list the MAC addresses detected on that port.

Determining Whether a Specific Device Is Connected to the Selected Port. Proceeding from step 2, above:

1. Press **[S]** (for **Search**), to display the following prompt:

   `Enter MAC address: _`

2. Type the MAC address you want to locate and press **[Enter]**. The address is highlighted if found. If the switch does not find the address, it leaves the MAC address listing empty.

3. Press **[P]** (for **Prev page**) to return to the previous per-port listing.

CLI Access for MAC Address Views and Searches

Syntax: show mac-address
[vlan < *vlan-id* >]
[< *port-list* >]
[< mac-addr >]

To List All Learned MAC Addresses on the Switch, with The Port Number on Which Each MAC Address Was Learned.

```
ProCurve> show mac-address
```

To List All Learned MAC Addresses on one or more ports, with Their Corresponding Port Numbers. For example, to list the learned MAC address on ports A1 through A4 and port A6:

```
ProCurve> show mac-address a1-a4,a6
```

To List All Learned MAC Addresses on a VLAN, with Their Port Numbers. This command lists the MAC addresses associated with the ports for a given VLAN. For example:

```
ProCurve> show mac-address vlan 100
```

Note

The switches covered by this guide operate with a multiple forwarding database architecture. For more on this topic, refer to “Duplicate MAC Addresses on Different Switches” on page C-14

To Find the Port On Which the Switch Learned a Specific MAC Address. For example, to find the port on which the switch learns a MAC address of 080009-21ae84:

```
ProCurve# show mac-address 080009-21ae84
 Status and Counters - Address Table - 080009-21ae84
  MAC Address : 080009-21ae84
  Located on Port : A2
```

Spanning Tree Protocol (STP) Information

Menu Access to STP Data

From the Main Menu, select:

1. Status and Counters …
8. Spanning Tree Information

STP must be enabled on the switch to display the following data:

```
==========================- CONSOLE - MANAGER MODE -============================
                Status and Counters - Spanning Tree Information

  STP Enabled            : Yes
  Switch Priority        : 32,768
  Hello Time             : 2
  Max Age                : 20
  Forward Delay          : 15

  Topology Change Count  : 3
  Time Since Last Change : 4 mins

  Root MAC Address       : 0030c1-7fcc40
  Root Path Cost         : 0
  Root Port              : This switch is root
  Root Priority          : 32768


 Actions->   Back     Show ports     Help

Return to previous screen.
Use arrow keys to change action selection and <Enter> to execute action.
```

Figure B-11. Example of Spanning Tree Information

Use this screen to determine current switch-level STP parameter settings and statistics.

You can use the **Show ports** action at the bottom of the screen to display port-level information and parameter settings for each port in the switch (including port type, cost, priority, operating state, and designated bridge) as shown in figure B-12.

```
========================- CONSOLE - MANAGER MODE -============================
             Status and Counters - Spanning Tree - Port Information

  Port    Type      Cost   Priority    State      Designated Bridge
  ----  ---------  -----  --------  ----------  -----------------
  A1    100/1000T      5       128  Forwarding  0001e7-a09900
  A2    100/1000T      5       128  Forwarding  0001e7-a09900
  A3    100/1000T      5       128  Disabled
  A4    100/1000T      5       128  Disabled
  A5    100/1000T      5       128  Disabled
  A6    100/1000T      5       128  Disabled
  C1    1000SX         5       128  Forwarding  0001e7-a09900
  C2    1000SX         5       128  Forwarding  0001e7-a09900
  C3    1000SX         5       128  Forwarding  0001e7-a09900

 Actions->   Back    Help

Return to previous screen.
Use up/down arrow keys to scroll to other entries, left/right arrow keys to
change action selection, and <Enter> to execute action.
```

Figure B-12. Example of STP Port Information

CLI Access to STP Data

This option lists the STP configuration, root data, and per-port data (cost, priority, state, and designated bridge).

Syntax: show spanning-tree

```
ProCurve> show spanning-tree
```

Internet Group Management Protocol (IGMP) Status

The switch uses the CLI to display the following IGMP status on a per-VLAN basis:

Show Command	Output
show ip igmp	Global command listing IGMP status for all VLANs configured in the switch: • VLAN ID (VID) and name • Active group addresses per VLAN • Number of report and query packets per group • Querier access port per VLAN
show ip igmp <*vlan-id*>	Per-VLAN command listing above IGMP status for specified VLAN (VID)
show ip igmp group <*ip-addr*>	Lists the ports currently participating in the specified group, with port type, Access type, Age Timer data and Leave Timer data.

For example, suppose that **show ip igmp** listed an IGMP group address of 224.0.1.22. You could get additional data on that group by executing the following:

```
HPswitch> show ip igmp group 224.0.1.22

 IGMP ports for group 224.0.1.22

  Port Type       Access       Age Timer Leave Timer
  ---- --------- ----------- --------- -----------
  3    10/100TX  host         0         0
```

Figure B-13. Example of IGMP Group Data

VLAN Information

The switch uses the CLI to display the following VLAN status:

Show Command	Output
show vlan	Lists: • Maximum number of VLANs to support • Existing VLANs • Status (static or dynamic) • Primary VLAN
show vlan <*vlan-id*>	For the specified VLAN, lists: • Name, VID, and status (static/dynamic) • Per-Port mode (tagged, untagged, forbid, no/auto) • "Unknown VLAN" setting (Learn, Block, Disable) • Port status (up/down)

For example, suppose that your switch has the following VLANs:

Ports	VLAN	VID
A1 - A12	DEFAULT_VLAN	1
A1, A2	VLAN-33	33
A3, A4	VLAN-44	44

The next three figures show how you could list data on the above VLANs.

Listing the VLAN ID (VID) and Status for ALL VLANs in the Switch.

```
ProCurve> show vlan
  Status and Counters - VLAN Information
   VLAN support : Yes
   Maximum VLANs to support : 9
   Primary VLAN: DEFAULT_VLAN
   802.1Q VLAN ID Name          Status
   -------------- ------------- --------
   1              DEFAULT_VLAN  Static
   33             VLAN-33       Static
   44             VLAN-44       Static
```

Figure B-14. Example of VLAN Listing for the Entire Switch

Listing the VLAN ID (VID) and Status for Specific Ports.

Because ports A1 and A2 are not members of VLAN-44, it does not appear in this listing.

```
ProCurve>show vlan ports A1-A2
 Status and Counters - VLAN Information - for ports A1,A2
  802.1Q VLAN ID Name          Status
  -------------- ------------- -------------
  1              DEFAULT_VLAN  Static
  33             VLAN-33       Static
```

Figure B-15. Example of VLAN Listing for Specific Ports

Listing Individual VLAN Status.

```
ProCurve>show vlan 1
 Status and Counters - VLAN Information - Ports - VLAN 1
  802.1Q VLAN ID : 1
  Name           : DEFAULT_VLAN
  Status         : Static

  Port Information Mode     Unknown VLAN Status
  ---------------- -------- ------------ ----------
  A1               Untagged Learn        Up
  A2               Tagged   Learn        Up
  A3               Untagged Learn        Up
  A4               Untagged Learn        Down
  A5               Untagged Learn        Down
  .                   .        .           .
  .                   .        .           .
  .                   .        .           .
```

Figure B-16. Example of Port Listing for an Individual VLAN

Web Browser Interface Status Information

The “home” screen for the web browser interface is the Status Overview screen, as shown below. As the title implies, it provides an overview of the status of the switch, including summary graphs indicating the network utilization on each of the switch ports, symbolic port status indicators, and the Alert Log, which informs you of any problems that may have occurred on the switch.

For more information on this screen, refer to chapter 5, “Using the Web Browser Interface” .

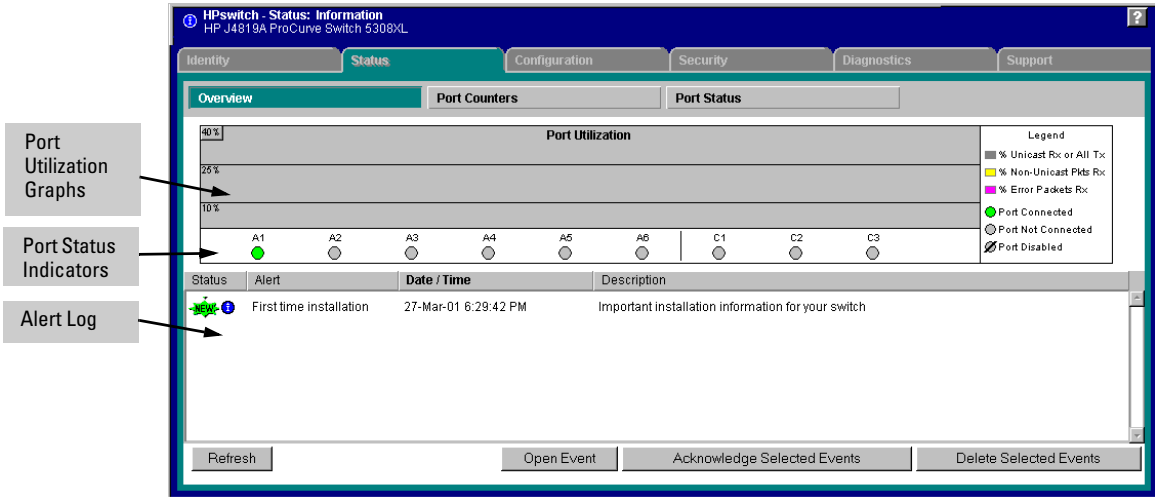

Figure B-17. Example of a Web Browser Interface Status Overview Screen

Interface Monitoring Features

Port Monitoring Features

Feature	Default	Menu	CLI	Web
display monitoring configuration	disabled	page B-24	page B-26	page B-29
configure the monitor port(s)	ports: none	page B-24	page B-27	page B-29
selecting or removing ports	none selected	page B-24	page B-28	page B-29

You can designate monitoring of inbound and outbound traffic on:

- **Ports and static trunks:** Allows monitoring of individual ports, groups of contiguous ports, and static port trunks.
- **Meshed ports:** Allows traffic monitoring on all ports configured for meshing on the switch.
- **Static VLANs:** Allows traffic monitoring on one static VLAN (*5300xl switches and 4200vl switches only*).

The switch monitors network activity by copying all traffic inbound and outbound on the specified interfaces to the designated monitoring port, to which a network analyzer can be attached.

Note

VLANs, a switch mesh, and port trunks cannot be used as a monitoring port.

The switch can monitor static LACP trunks, but not dynamic LACP trunks.

It is possible, when monitoring multiple interfaces in networks with high traffic levels, to copy more traffic to a monitor port than the link can support. In this case, some packets may not be copied to the monitor port.

Menu: Configuring Port and Static Trunk Monitoring

This procedure describes configuring the switch for monitoring when monitoring is disabled. (If monitoring has already been enabled, the screens will appear differently than shown in this procedure.)

1. From the Console Main Menu, Select:

   2. Switch Configuration...

   3. Network Monitoring Port

```
==========================- CONSOLE - MANAGER MODE -============================
                  Switch Configuration - Network Monitoring Port

  Monitoring Enabled [No] : No

 Actions->   Cancel     Edit     Save     Help

Select whether to enable traffic monitoring.
Use arrow keys to change field selection, <Space> to toggle field choices,
and <Enter> to go to Actions.
```

Enable monitoring by setting this parameter to "Yes".

Figure B-18. The Default Network Monitoring Configuration Screen

2. In the Actions menu, press **[E]** (for `Edit`).
3. If monitoring is currently disabled (the default) then enable it by pressing the Space bar (or **[Y]**) to select `Yes`.
4. Press the down arrow key to display a screen similar to the following and move the cursor to the **Monitoring Port** parameter.

```
ProCurve
========================= CONSOLE - MANAGER MODE ============================
                 Switch Configuration - Network Monitoring Port

  Monitoring Enabled [No] : Yes
  Monitoring Port : A1
  Monitor : Ports

  Port    Type       Action     |  Port    Type       Action
  ----  --------- + -------     |  ----  --------- + -------
  A1    10/100TX  |            |  A10   10/100TX  |
  A2    10/100TX  |            |  A11   10/100TX  |
  A3    10/100TX  |            |  A12   10/100TX  |
  A4    10/100TX  |            |  A13   10/100TX  |
  A5    10/100TX  |            |  A14   10/100TX  |
  A6    10/100TX  |            |  A15   10/100TX  |
  A7    10/100TX  |            |  A20   10/100TX  |
  A8    10/100TX  |            |  Trk1  Trunk     |

 Actions->   Cancel     Edit     Save     Help

Select the port that will act as the Monitoring Port.
Use arrow keys to change field selection, <Space> to toggle field choices,
and <Enter> to go to Actions.
```

Move the cursor to the Monitoring Port parameter.

Inbound Port and Trunk Monitoring (Only) on the Switch 4108

Figure B-19. How To Select a Monitoring Port

5. Use the Space bar to select the port to use for monitoring.
6. Highlight the Monitor field and use the Space bar to select the interfaces to monitor:

   Ports: Use for monitoring ports, static trunks, or the mesh.

   VLAN: Use for monitoring a VLAN (*5300xl and 4200vl switches*).
7. Do one of the following:
   - If you are monitoring ports, static trunks, or the mesh, go to step 8.
   - If you are monitoring a VLAN on a 5300xl switch:
     i. Press **[Tab]** or the down arrow key to move to the **VLAN** field.

```
ProCurve
========================= CONSOLE - MANAGER MODE ===========
                 Switch Configuration - Network Monitoring Por

  Monitoring Enabled [No] : Yes
  Monitoring Port : A1
  Monitor : VLAN
  VLAN : VLAN_20
```

Use the Space bar to select a VLAN to monitor.

ii. Use the Space bar to select the VLAN you want to monitor.
iii. Go to step 10.

8. Use the down arrow key to move the cursor to the **Action** column for the individual ports and position the cursor at a port you want to monitor.
9. Press the Space bar to select **Monitor** for each port and trunk that you want monitored. (Use the down arrow key to move from one interface to the next in the **Action** column.)
10. When you finish selecting ports to monitor, press **[Enter]**, then press **[S]** (for **Save**) to save your changes and exit from the screen.
11. Return to the Main Menu.

CLI: Configuring Port, Mesh, and Static Trunk Monitoring

Port, Mesh, and Static Trunk Monitoring Commands Used in This Section

show monitor	below
mirror-port	page B-27
monitor	page B-28

You must use the following configuration sequence to configure port and static trunk monitoring in the CLI:

1. Assign a monitoring (mirror) port.
2. Designate the port(s), mesh, and/or static trunk(s) to monitor.

Displaying the Monitoring Configuration.

Syntax: show monitor

This command lists the port assigned to receive monitored traffic and the ports and/or trunks being monitored.

For example, if you assign port A6 as the monitoring port and configure the switch to monitor ports A1 - A3, **show monitor** displays the following:

```
ProCurve(config)# show monitor

 Network Monitoring Port

  Mirror Port: A6          <-- Port receiving monitored traffic.

  Monitoring sources
  ------------------
  A1
  A2                       <-- Monitored Ports
  A3
```

Figure B-20. Example of Monitored Port Listing

Configuring the Monitor Port.

Syntax: [no] mirror-port [< *port-num* >]

> *This command assigns or removes a monitoring port, and must be executed from the global configuration level. Removing the monitor port disables port monitoring and resets the monitoring parameters to their factory-default settings.*

For example, to assign port A6 as the monitoring port:

```
ProCurve(config)# mirror-port a6
```

To turn off monitoring:

```
ProCurve(config)# no mirror-port
```

Selecting or Removing Monitoring Source Interfaces. After you configure a monitor port you can use either the global configuration level or the interface context level to select ports, static trunks, meshed ports, or (for the 5300xl switches or 4200vl switches) VLANs as monitoring sources. You can also use either level to remove monitoring sources.

Syntax: [no] interface < *monitor-list* > monitor
[no] vlan < *vid* > monitor

where:

< *monitor-list* > *Includes port numbers, static trunk names, and meshing, such as* ***a4***, ***c7***, ***b5-b8***, ***trk1***, *and* ***mesh***.

< *vid* > *Allows monitoring of one VLAN. (This option applies to the 5300xl and 4200vl switches.)*

Identifies the switch elements to monitor through the currently configured monitor port. You can monitor the port(s), static trunk(s), and any switch mesh available on the switch or, on a 5300xl or 4200vl, one VLAN.

Note

Individual ports, static trunks, and meshing can all be monitored at the same time. However, if you configure the switch to monitor a VLAN (*5300xl and 4200vl switches only*), all other interfaces are removed from monitoring. Also, you can configure only one VLAN at a time for monitoring.

Elements in the monitor list can include port numbers, static trunk names, and the mesh at the same time.

For example, with a port such as port A6 configured as the monitoring (mirror) port, you would use either of the following commands to select these interfaces for monitoring:

- A1 through A3, and A5
- Trunks 1 and 2
- Meshing

From the global config level, selects ports and trunks for monitoring sources.

```
ProCurve(config)# int b6-b9,b14,trk2,mesh monitor

ProCurve(config)# int b6-b9,b14,trk2,mesh
ProCurve(eth-B6-B9,B14,Mesh,Trk2)# monitor
```

Selects the interface context level, then selects the ports as monitoring sources.

Figure B-21. Examples of Selecting Ports and Static Trunks as Monitoring Sources

To monitor a VLAN:

```
ProCurve(config)# vlan 20 monitor

ProCurve(config)# show monitor
 Network Monitoring Port
  Mirror Port: A1
  Monitoring sources
  ------------------
  VLAN_20
```

Configure monitoring of VLAN 20.

Display current monitoring configuration:
- Monitor port
- Interface Being Monitored

Figure B-22. Example of Configuring VLAN Monitoring

```
ProCurve(eth-A1-A3,A5)# no int a5 monitor
ProCurve(eth-A1-A3,A5)# no monitor


ProCurve(config)# no int a5 monitor
ProCurve(config)# no int a1-a3,a5 monitor
```

These two commands show how to disable monitoring at the interface context level for a single port or all ports in an interface context level.

These two commands show how to disable monitoring at the global config level for a single port or a group of ports.

Figure B-23. Examples of Removing Ports as Monitoring Sources

Web: Configuring Port Monitoring

To enable port monitoring:

1. Click on the **Configuration** tab.
2. Click on **[Monitor Port]**.
3. To monitor one or more ports.
   a. Click on the radio button for **Monitor Selected Ports**.
   b. Select the port(s) to monitor.
4. Click on **[Apply Changes]**.

To remove port monitoring:

1. Click on the **[Monitoring Off]** radio button.
2. Click on **[Apply Changes]**.

For web-based Help on how to use the web browser interface screen, click on the **[?]** button provided on the web browser screen.

— This page is intentionally unused. —

Troubleshooting

Contents

Overview C-3

Troubleshooting Approaches C-4

Browser or Telnet Access Problems C-5

Unusual Network Activity C-7

General Problems C-7

802.1Q Prioritization Problems C-8

ACL Problems C-8

IGMP-Related Problems C-13

LACP-Related Problems C-13

Mesh-Related Problems C-14

Port-Based Access Control (802.1x)-Related Problems C-15

QoS-Related Problems C-18

Radius-Related Problems C-18

Spanning-Tree Protocol (STP) and Fast-Uplink Problems C-19

SSH-Related Problems C-20

TACACS-Related Problems C-22

TimeP, SNTP, or Gateway Problems C-24

VLAN-Related Problems C-24

Using the Event Log To Identify Problem Sources C-27

Menu: Entering and Navigating in the Event Log C-29

CLI: Listing Events C-30

Reducing Duplicate Event Log and SNMP Trap Messages C-31

Debug and Syslog Messaging Operation C-34

Debug Command Operation C-35

Debug Types C-36
Debug Destinations C-38
Syslog Operation C-39
Viewing the Debug Configuration C-40
Steps for Configuring Debug and Syslog Messaging C-40
Operating Notes for Debug and Syslog C-44

Diagnostic Tools C-45
Port Auto-Negotiation C-45
Ping and Link Tests C-45
Web: Executing Ping or Link Tests C-47
CLI: Ping or Link Tests C-48
Displaying the Configuration File C-50
CLI: Viewing the Configuration File C-50
Web: Viewing the Configuration File C-50
Listing Switch Configuration and Operation Details C-50
CLI Administrative and Troubleshooting Commands C-52
Traceroute Command C-53

Restoring the Factory-Default Configuration C-57
CLI: Resetting to the Factory-Default Configuration C-57
Clear/Reset: Resetting to the Factory-Default Configuration . C-57

Restoring a Flash Image C-58

Overview

This chapter addresses performance-related network problems that can be caused by topology, switch configuration, and the effects of other devices or their configurations on switch operation. (For switch-specific information on hardware problems indicated by LED behavior, cabling requirements, and other potential hardware-related problems, refer to the installation guide you received with the switch.)

Note

ProCurve periodically places switch software updates on the ProCurve Networking web site. ProCurve recommends that you check this web site for software updates that may have fixed a problem you are experiencing.

For information on support and warranty provisions, see the Support and Warranty booklet shipped with the switch.

Troubleshooting Approaches

Use these approaches to diagnose switch problems:

- Check the ProCurve Networking web site for software updates that may have solved your problem: **www.procurve.com**
- Check the switch LEDs for indications of proper switch operation:
  - Each switch port has a Link LED that should light whenever an active network device is connected to the port.
  - Problems with the switch hardware and software are indicated by flashing the Fault and other switch LEDs.

    See the *Installation Guide* shipped with the switch for a description of the LED behavior and information on using the LEDs for troubleshooting.
- Check the network topology/installation. See the *Installation Guide* shipped with the switch for topology information.
- Check cables for damage, correct type, and proper connections. You should also use a cable tester to check your cables for compliance to the relevant IEEE 802.3 specification. See the *Installation Guide* shipped with the switch for correct cable types and connector pin-outs.
- Use ProCurve Manager to help isolate problems and recommend solutions.
- Use the Port Utilization Graph and Alert Log in the web browser interface included in the switch to help isolate problems. See Chapter 5, “Using the Web Browser Interface” for operating information. These tools are available through the web browser interface:
  - Port Utilization Graph
  - Alert Log
  - Port Status and Port Counters screens
  - Diagnostic tools (Link test, Ping test, configuration file browser)
- For help in isolating problems, use the easy-to-access switch console built into the switch or Telnet to the switch console. See chapter 4, “Using the Switch Console Interface” for operating information. These tools are available through the switch console
  - Status and Counters screens
  - Event Log
  - Diagnostics tools (Link test, Ping test, configuration file browser, and advanced user commands)

Browser or Telnet Access Problems

Cannot access the web browser interface:

- Access may be disabled by the **Web Agent Enabled** parameter in the switch console. Check the setting on this parameter by selecting:

  2. Switch Configuration …

  1. System Information

- The switch may not have the correct IP address, subnet mask or gateway. Verify by connecting a console to the switch's Console port and selecting:

  2. Switch Configuration …

  5. IP Configuration

  Note: If DHCP/Bootp is used to configure the switch, the IP addressing can be verified by selecting:

  1. Status and Counters …

  2. Switch Management Address Information

  also check the DHCP/Bootp server configuration to verify correct IP addressing.

- If you are using DHCP to acquire the IP address for the switch, the IP address "lease time" may have expired so that the IP address has changed. For more information on how to "reserve" an IP address, refer to the documentation for the DHCP application that you are using.
- If one or more IP-Authorized managers are configured, the switch allows web browser access only to a device having an authorized IP address. For more information on IP Authorized managers, refer to the *Access Security Guide* for your switch.
- Java™ applets may not be running on the web browser. They are required for the switch web browser interface to operate correctly. See the online Help on your web browser for how to run the Java applets.

Cannot Telnet into the switch console from a station on the network:

- Off subnet management stations can lose Telnet access if you enable routing without first configuring a static (default) route. That is, the switch uses the IP default gateway only while operating as a Layer 2 device. While routing is enabled on the switch, the IP default gateway is not used. You can avoid this problem by using the ip route command to configure a static (default) route before enabling routing. Refer to chapter 16, "IP Routing Features", for more information.
- Telnet access may be disabled by the **Inbound Telnet Enabled** parameter in the System Information screen of the menu interface:

  2. Switch Configuration

  1. System Information
- The switch may not have the correct IP address, subnet mask, or gateway. Verify by connecting a console to the switch's Console port and selecting:

  2. Switch Configuration

  5. IP Configuration

  Note: If DHCP/Bootp is used to configure the switch, see the **Note**, above.
- If you are using DHCP to acquire the IP address for the switch, the IP address "lease time" may have expired so that the IP address has changed. For more information on how to "reserve" an IP address, refer to the documentation for the DHCP application that you are using.
- If one or more IP-Authorized managers are configured, the switch allows inbound telnet access only to a device having an authorized IP address. For more information on IP Authorized managers, refer to the *Access Security Guide* for your switch.

Unusual Network Activity

Network activity that fails to meet accepted norms may indicate a hardware problem with one or more of the network components, possibly including the switch. Such problems can also be caused by a network loop or simply too much traffic for the network as it is currently designed and implemented. Unusual network activity is usually indicated by the LEDs on the front of the switch or measured with the switch console interface or with a network management tool such as ProCurve Manager. Refer to the *Installation Guide* you received with the switch for information on using LEDs to identify unusual network activity.

A topology loop can also cause excessive network activity. The Event Log "FFI" messages can be indicative of this type of problem.

General Problems

The network runs slow; processes fail; users cannot access servers or other devices. Broadcast storms may be occurring in the network. These may be due to redundant links between nodes.

- If you are configuring a port trunk, finish configuring the ports in the trunk before connecting the related cables. Otherwise you may inadvertently create a number of redundant links (i.e. topology loops) that will cause broadcast storms.
- Turn on Spanning Tree Protocol to block redundant links (i.e. topology loops)
- Check for FFI messages in the Event Log.

Duplicate IP Addresses. This is indicated by this Event Log message:

> **ip: Invalid ARP source:** *IP address* **on** *IP address*
>
> *where:* both instances of *IP address* are the same address, indicating the switch's IP address has been duplicated somewhere on the network.

Duplicate IP Addresses in a DHCP Network. If you use a DHCP server to assign IP addresses in your network and you find a device with a valid IP address that does not appear to communicate properly with the server or other devices, a duplicate IP address may have been issued by the server. This can occur if a client has not released a DHCP-assigned IP address after the intended expiration time and the server "leases" the address to another device.

This can also happen, for example, if the server is first configured to issue IP addresses with an unlimited duration, then is subsequently configured to issue IP addresses that will expire after a limited duration. One solution is to configure "reservations" in the DHCP server for specific IP addresses to be assigned to devices having specific MAC addresses. For more information, refer to the documentation for the DHCP server.

One indication of a duplicate IP address in a DHCP network is this Event Log message:

`ip: Invalid ARP source: <` *IP-address* `> on <`*IP-address*`>`

where: both instances of *IP-address* are the same address, indicating the IP address that has been duplicated somewhere on the network.

The Switch Has Been Configured for DHCP/Bootp Operation, But Has Not Received a DHCP or Bootp Reply. When the switch is first configured for DHCP/Bootp operation, or if it is rebooted with this configuration, it immediately begins sending request packets on the network. If the switch does not receive a reply to its DHCP/Bootp requests, it continues to periodically send request packets, but with decreasing frequency. Thus, if a DHCP or Bootp server is not available or accessible to the switch when DHCP/Bootp is first configured, the switch may not immediately receive the desired configuration. After verifying that the server has become accessible to the switch, reboot the switch to re-start the process.

802.1Q Prioritization Problems

Ports configured for non-default prioritization (level 1 - 7) are not performing the specified action. If the ports were placed in a trunk group after being configured for non-default prioritization, the priority setting was automatically reset to zero (the default). Ports in a trunk group operate only at the default priority setting.

ACL Problems

Series 5300xl Switches Only: ACLs are properly configured and assigned to VLANs, but the switch is not using the ACLs to filter IP layer 3 packets.

1. The 5300xl switch may be running with IP routing disabled. To ensure that IP routing is enabled, execute **show running** and look for the IP routing statement in the resulting listing. For example:

```
ProCurve(config)# show running

Running configuration:

; J4850A Configuration Editor; Created on release #E.08.01

hostname " ProCurve"
cdp run
module 1 type J4820A
ip default-gateway 10.30.248.1
ip routing
logging 10.28.227.2
snmp-server community "public" Unrestricted
ip access-list extended "Controls for VLAN 20"
   permit tcp 0.0.0.0 255.255.255.255 10.10.20.98 0.0.0.0 eq 80
   permit tcp 0.0.0.0 255.255.255.255 10.10.20.21 0.0.0.0 eq 80
   deny tcp 0.0.0.0 255.255.255.255 10.10.20.1 0.0.0.255 eq 80
   deny tcp 10.10.20.17 0.0.0.0 10.10.10.100 0.0.0.0 eq 23 log
   deny tcp 10.10.20.23 0.0.0.0 10.10.10.100 0.0.0.0 eq 23 log
   deny tcp 10.10.20.40 0.0.0.0 10.10.10.100 0.0.0.0 eq 23 log
   permit ip 10.10.20.1 0.0.0.255 10.10.10.100 0.0.0.0
   deny ip 10.10.30.1 0.0.0.255 10.10.10.100 0.0.0.0
   permit ip 10.10.30.1 0.0.0.255 10.10.10.1 0.0.0.255
   exit
-- MORE --, next page: Space, next line: Enter, quit: Control-C
```

Indicates that routing is enabled; a requirement for ACL operation. (There is an exception. See the **Note**, below.)

Figure C-1. Indication that Routing Is Enabled

Note

If an ACL assigned to a VLAN includes an ACE referencing an IP address on the switch itself as a packet source or destination, the ACE screens traffic to or from this switch address regardless of whether IP routing is enabled. This is a security measure designed to help protect the switch from unauthorized management access.

If you need to configure IP routing, execute the **ip routing** command.

2. ACL filtering on the 5300xl switches applies only to routed packets and packets having a destination IP address (DA) on the switch itself. Also, the switch applies assigned ACLs only at the point where traffic enters or leaves the switch on a VLAN. Ensure that you have correctly applied your ACLs (“in” and/or “out”) to the appropriate VLAN(s).

The switch does not allow management access from a device on the same VLAN.

The implicit **deny any** function that the switch automatically applies as the last entry in any ACL always blocks packets having the same DA as the switch’s IP address on the same VLAN. That is, bridged packets with the switch itself as the destination are blocked as a security measure. To preempt this action, edit the ACL to include an ACE that permits access to the switch’s DA on that VLAN from the management device.

Error (Invalid input) when entering an IP address.

When using the "host" option in the command syntax, ensure that you are not including a mask in either dotted decimal or CIDR format. Using the "host" option implies a specific host device and therefore does not permit any mask entry.

```
ProCurve(config)# access-list 6 permit host 18.28.100.100

ProCurve(config)# access-list 6 permit host 18.28.100.100 255.255.255.255
Invalid input: 255.255.255.255

ProCurve(config)# access-list 6 permit host 18.28.100.100/32
Invalid input: 18.28.100.100/32
```

Correct.

Incorrect. No mask needed to specify a single host.

Figure C-2. Examples of Correctly and Incorrectly Specifying a Single Host

Apparent failure to log all "Deny" Matches.

Where the **log** statement is included in multiple ACEs configured with a "deny" option, a large volume of "deny" matches generating logging messages in a short period of time can impact switch performance. If it appears that the switch is not consistently logging all "deny" matches, try reducing the number of logging actions by removing the **log** statement from some ACEs configured with the "deny" action.

The switch does not allow any routed access from a specific host, group of hosts, or subnet.

The implicit **deny any** function that the switch automatically applies as the last entry in any ACL may be blocking all access by devices not specifically permitted by an entry in an ACL affecting those sources. If you are using the ACL to block specific hosts, a group of hosts, or a subnet, but want to allow any access not specifically permitted, insert **permit any** as the last explicit entry in the ACL.

The switch is not performing routing functions on a VLAN

Two possible causes of this problem are:

- Routing is not enabled. If **show running** indicates that routing is not enabled, use the **ip routing** command to enable routing.
- *On a Series 5300xl switch*, an ACL may be blocking access to the VLAN. Ensure that the switch's IP address on the VLAN is not blocked by one of the ACE entries in an ACL applied to that VLAN. A common mistake is to either not explicitly permit the switch's IP address as a

DA or to use a wildcard ACL mask in a deny statement that happens to include the switch's IP address. For an example of this problem, refer to the section titled "General ACL Operating Notes" in the "Access Control Lists (ACLs)" chapter of the Advanced Traffic Management Guide for your switch.

Routing Through a Gateway on the Switch Fails

Configuring a "deny" ACE that includes a gateway address can block traffic attempting to use the gateway as a next-hop.

Remote Gateway Case on a Series 5300xl Switch. For example, configuring ACL "101" (below) and applying it outbound on VLAN 1 in figure C-4 includes the router gateway (10.0.8.1) needed by devices on other networks. This can prevent the switch from sending ARP and other routing messages to the gateway router to support traffic from authorized remote networks.

In figure C-4, this ACE denies access to the 10 Net's 10.0.8.1 router gateway needed by the 20 Net.

(*Subnet* mask is 255.255.255.0.)

```
ProCurve(config)# show access-list config

ip access-list extended "101"
   deny ip 0.0.0.0 255.255.255.255 10.0.8.30 0.0.0.255
   permit ip 0.0.0.0 255.255.255.255 0.0.0.0 255.255.255.255
   exit
```

Figure C-3. Example of ACE Blocking an Entire Subnet

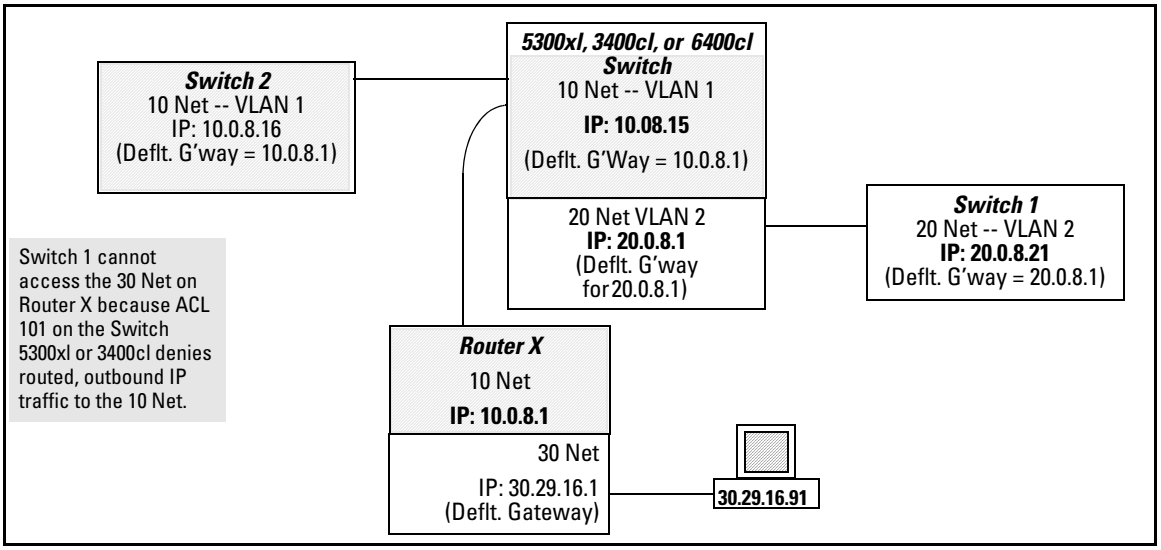

Figure C-4. Example of Inadvertently Blocking a Gateway

To avoid inadvertently blocking the remote gateway for authorized traffic from another network (such as the 20 Net in this example):

1. Configure an ACE that specifically permits authorized traffic from the remote network.
2. Configure narrowly defined ACEs to block unwanted IP traffic that would otherwise use the gateway. Such ACEs might deny traffic for a particular application, particular hosts, or an entire subnet.
3. Configure a "permit any" ACE to specifically allow any IP traffic to move through the gateway.

Local Gateway Case. If you use the switch as a gateway for traffic you want routed between subnets, use these general steps to avoid blocking the gateway for authorized applications:

1. Configure gateway security first for routing with specific permit and deny statements.
2. Permit authorized traffic.
3. Deny any unauthorized traffic that you have not already denied in step 1.

IGMP-Related Problems

IP Multicast (IGMP) Traffic That Is Directed By IGMP Does Not Reach IGMP Hosts or a Multicast Router Connected to a Port. IGMP must be enabled on the switch and the affected port must be configured for "Auto" or "Forward" operation.

IP Multicast Traffic Floods Out All Ports; IGMP Does Not Appear To Filter Traffic. The IGMP feature does not operate if the switch or VLAN does not have an IP address configured manually or obtained through DHCP/Bootp. To verify whether an IP address is configured for the switch or VLAN, do either of the following:

- **Try Using the Web Browser Interface:** If you can access the web browser interface, then an IP address is configured.
- **Try To Telnet to the Switch Console:** If you can Telnet to the switch, then an IP address is configured.
- **Using the Switch Console Interface:** From the Main Menu, check the Management Address Information screen by clicking on

  1. Status and Counters

  2. Switch Management Address Information

LACP-Related Problems

Unable to enable LACP on a port with the **interface < *port-number* > lacp** command. In this case, the switch displays the following message:

Operation is not allowed for a trunked port.

You cannot enable LACP on a port while it is configured as static **Trunk** port. To enable LACP on static-trunked port, first use the **no trunk < *port-number* >** command to disable the static trunk assignment, then execute **interface < *port-number* > lacp**.

Caution

Removing a port from a trunk without first disabling the port can create a traffic loop that can slow down or halt your network. Before removing a port from a trunk, ProCurve recommends that you either disable the port or disconnect it from the LAN.

Mesh-Related Problems

Traffic on a dynamic VLAN does not get through the switch mesh .

GVRP enables dynamic VLANs. Ensure that all switches in the mesh have GVRP enabled. (Note that ProCurve 1600M/2400M/2424M/4000M/8000M switches do not offer GVRP. Thus, if there are any of these switches in the mesh, GVRP must be disabled for any switch in the mesh.)

The Switch Mesh Does Not Allow A ProCurve Switch 1600M/2400M/2424M/4000M/8000M Port To Join the Mesh . One of the switches in the mesh domain has detected a duplicate MAC address on multiple switches. For example:

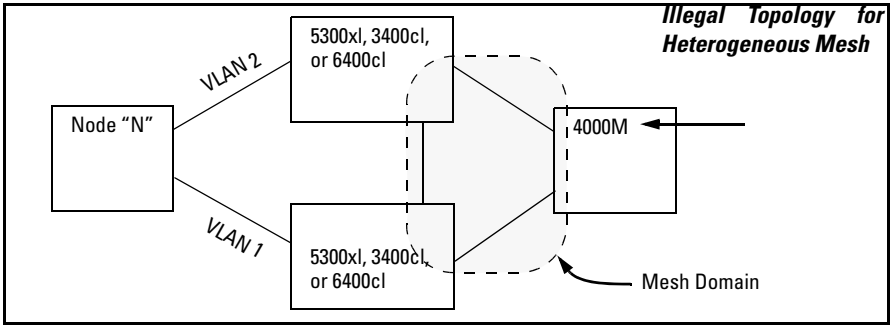

Figure C-5. Example of Illegal Topology for Heterogeneous Mesh

Changing the topology can solve this problem. Also, the duplicate MAC address must age out before the Switch 1600M/2400M/2424M/4000M/8000M port can join the mesh. Refer to the following two topics in the "Switch Meshing" chapter of the *Advanced Traffic Management Guide* for your switch:

- The section titled "Using a Heterogeneous Switch Mesh"
- The bulleted item titled "Compatibility with Older Switches" in the section titled "Requirements and Restrictions".

Duplicate MAC Addresses on Different Switches. In a switch mesh that includes any 1600M/2400M/2424M/4000M/8000M switches, duplicate MAC addresses on different switches are not allowed. (The 1600M/2400M/2424M/4000M/8000M switches do not recognize multiple instances of a particular MAC address on different VLANs.) Refer to "The Switch Mesh Does Not Allow A ProCurve Switch 1600M/2400M/2424M/4000M/8000M Port To Join the Mesh" on page C-14.

Port-Based Access Control (802.1x)-Related Problems

Note

To list the 802.1x port-access Event Log messages stored on the switch, use **show log 802**.

See also “Radius-Related Problems” on page C-18.

The switch does not receive a response to RADIUS authentication requests. In this case, the switch will attempt authentication using the secondary method configured for the type of access you are using (console, Telnet, or SSH).

There can be several reasons for not receiving a response to an authentication request. Do the following:

- Use **ping** to ensure that the switch has access to the configured RADIUS servers.
- Verify that the switch is using the correct encryption key (RADIUS secret key) for each server.
- Verify that the switch has the correct IP address for each RADIUS server.
- Ensure that the **radius-server timeout** period is long enough for network conditions.

The switch does not authenticate a client even though the RADIUS server is properly configured and providing a response to the authentication request. If the RADIUS server configuration for authenticating the client includes a VLAN assignment, ensure that the VLAN exists as a static VLAN on the switch. Refer to "How 802.1x Authentication Affects VLAN Operation" in the *Access Security Guide* for your switch.

During RADIUS-authenticated client sessions, access to a VLAN on the port used for the client sessions is lost. If the affected VLAN is configured as untagged on the port, it may be temporarily blocked on that port during an 802.1x session. This is because the switch has temporarily assigned another VLAN as untagged on the port to support the client access, as specified in the response from the RADIUS server. Refer to "How 802.1x Authentication Affects VLAN Operation" in the *Access Security Guide* for your switch.

The switch appears to be properly configured as a supplicant, but cannot gain access to the intended authenticator port on the switch to which it is connected. If **aaa authentication port-access** is configured for Local, ensure that you have entered the local *login* (operator-level) username and password of the authenticator switch into the **identity** and **secret** parameters of the supplicant configuration. If instead, you enter the enable (manager-level) username and password, access will be denied.

The supplicant statistics listing shows multiple ports with the same authenticator MAC address. The link to the authenticator may have been moved from one port to another without the supplicant statistics having been cleared from the first port. Refer to "Note on Supplicant Statistics" in the chapter on Port-Based Access Control in the *Access Security Guide* for your switch.

The show port-access authenticator < *port-list* > command shows one or more ports remain open after they have been configured with control unauthorized. 802.1x is not active on the switch. After you execute **aaa port-access authenticator active**, all ports configured with **control unauthorized** should be listed as **Closed**.

```
ProCurve(config)# show port-access authenticator e A9
 Port Access Authenticator Status
  Port-access authenticator activated [No] : No
              Access   Authenticator  Authenticator
  Port Status Control  State          Backend State
  ---- ------ -------- -------------- --------------
  A9   Open   FU       Force Auth     Idle

ProCurve(config)# aaa port-access authenticator active

ProCurve(config)# show port-access authenticator e A9
 Port Access Authenticator Status
  Port-access authenticator activated [No] : Yes
              Access   Authenticator  Authenticator
  Port Status Control  State          Backend State
  ---- ------ -------- -------------- --------------
  A9   Closed FU       Force Unauth   Idle
```

Port A9 shows an "Open" status even though Access Control is set to **Unauthorized** (Force Auth). This is because the port-access authenticator has not yet been activated.

Figure C-6. Authenticator Ports Remain "Open" Until Activated

RADIUS server fails to respond to a request for service, even though the server's IP address is correctly configured in the switch. Use **show radius** to verify that the encryption key (RADIUS secret key) the switch is using is correct for the server being contacted. If the switch has only a global key configured, then it either must match the server key or you must configure a server-specific key. If the switch already has a server-specific key assigned to the server's IP address, then it overrides the global key and must match the server key.

```
10.33.18.119(config)# show radius
 Status and Counters - General RADIUS Information
  Deadtime(min) : 0
  Timeout(secs) : 5
  Retransmit Attempts : 3
  Global Encryption Key : My-Global-Key

                  Auth  Acct
  Server IP Addr  Port  Port  Encryption Key
  --------------- ----- ----- ---------------
  10.33.18.119    1812  1813  119-only-key
```

Global RADIUS Encryption Key

Unique RADIUS Encryption Key for the RADIUS server at 10.33.18.119

Figure C-7. Displaying Encryption Keys

Also, ensure that the switch port used to access the RADIUS server is not blocked by an 802.1x configuration on that port. For example, **show port-access authenticator < *port-list* >** gives you the status for the specified ports. Also, ensure that other factors, such as port security or any 802.1x configuration on the RADIUS server are not blocking the link.

The authorized MAC address on a port that is configured for both 802.1x and port security either changes or is re-acquired after execution of aaa port-access authenticator < *port-list* > initialize. If the port is force-authorized with **aaa port-access authenticator <port-list> control authorized** command and port security is enabled on the port, then executing **initialize** causes the port to clear the learned address and learn a new address from the first packet it receives after you execute **initialize**.

A trunked port configured for 802.1x is blocked. If you are using RADIUS authentication and the RADIUS server specifies a VLAN for the port, the switch allows authentication, but blocks the port. To eliminate this problem, either remove the port from the trunk or reconfigure the RADIUS server to avoid specifying a VLAN.

QoS-Related Problems

Loss of communication when using VLAN-tagged traffic. If you cannot communicate with a device in a tagged VLAN environment, ensure that the device either supports VLAN tagged traffic or is connected to a VLAN port that is configured as **Untagged**.

Radius-Related Problems

The switch does not receive a response to RADIUS authentication requests. In this case, the switch will attempt authentication using the secondary method configured for the type of access you are using (console, Telnet, or SSH).

There can be several reasons for not receiving a response to an authentication request. Do the following:

- Use **ping** to ensure that the switch has access to the configured RADIUS server.
- Verify that the switch is using the correct encryption key for the designated server.
- Verify that the switch has the correct IP address for the RADIUS server.

- Ensure that the **radius-server timeout** period is long enough for network conditions.
- Verify that the switch is using the same UDP port number as the server.

RADIUS server fails to respond to a request for service, even though the server's IP address is correctly configured in the switch. Use **show radius** to verify that the encryption key the switch is using is correct for the server being contacted. If the switch has only a global key configured, then it either must match the server key or you must configure a server-specific key. If the switch already has a server-specific key assigned to the server's IP address, then it overrides the global key and must match the server key.

Global RADIUS Encryption Key

```
10.33.18.119(config)# show radius
 Status and Counters - General RADIUS Information
   Deadtime(min) : 0
   Timeout(secs) : 5
   Retransmit Attempts : 3
   Global Encryption Key : My-Global-Key

                   Auth  Acct
   Server IP Addr  Port  Port  Encryption Key
   --------------- ----- ----- ---------------
   10.33.18.119    1812  1813  119-only-key
```

Unique RADIUS Encryption Key for the RADIUS server at 10.33.18.119

Figure C-8. Examples of Global and Unique Encryption Keys

Spanning-Tree Protocol (STP) and Fast-Uplink Problems

Caution

If you enable STP, it is recommended that you leave the remainder of the STP parameter settings at their default values until you have had an opportunity to evaluate STP performance in your network. Because incorrect STP settings can adversely affect network performance, you should avoid making changes without having a strong understanding of how STP operates. To learn the details of STP operation, refer to the IEEE 802.1D standard.

Broadcast Storms Appearing in the Network. This can occur when there are physical loops (redundant links) in the topology.Where this exists, you should enable STP on all bridging devices in the topology in order for the loop to be detected.

STP Blocks a Link in a VLAN Even Though There Are No Redundant Links in that VLAN. In 802.1Q-compliant switches STP blocks redundant physical links even if they are in separate VLANs. A solution is to use only one, multiple-VLAN (tagged) link between the devices. Also, if ports are available, you can improve the bandwidth in this situation by using a port trunk. Refer to "Spanning Tree Operation with VLANs" in the chapter titled "Static Virtual LANs (VLANs)" in the *Advanced Traffic Management Guide* for your switch.

Fast-Uplink Troubleshooting. Some of the problems that can result from incorrect usage of Fast-Uplink STP include temporary loops and generation of duplicate packets.

Problem sources can include:

- Fast-Uplink is configured on a switch that is the STP root device.
- Either the **Hello Time** or the **Max Age** setting (or both) is too long on one or more switches. Return the **Hello Time** and Max Age settings to their default values (2 seconds and 20 seconds, respectively, on a switch).
- A "downlink" port is connected to a switch that is further away (in hop count) from the root device than the switch port on which fast-uplink STP is configured.
- Two edge switches are directly linked to each other with a fast-uplink (Mode = **Uplink**) connection.
- Fast uplink is configured on both ends of a link.
- A switch serving as a backup STP root switch has ports configured for fast-uplink STP and has become the root device due to a failure in the original root device.

SSH-Related Problems

Switch access refused to a client. Even though you have placed the client's public key in a text file and copied the file (using the **copy tftp pub-key-file** command) into the switch, the switch refuses to allow the client to have access. If the source SSH client is an SSHv2 application, the public key may be in the PEM format, which the switch (SSHv1) does not interpret. Check the SSH client application for a utility that can convert the PEM-formatted key into an ASCII-formatted key.

Executing IP SSH does not enable SSH on the switch. The switch does not have a host key. Verify by executing show ip host-public-key. If you see the message

```
ssh cannot be enabled until a host key is configured
(use 'crypto' command).
```

then you need to generate an SSH key pair for the switch. To do so, execute **crypto key generate**.(Refer to "2. Generating the Switch's Public and Private Key Pair" in the SSH chapter of the *Access Security Guide* for your switch.)

Switch does not detect a client's public key that does appear in the switch's public key file (show ip client-public-key). The client's public key entry in the public key file may be preceded by another entry that does not terminate with a new line (CR). In this case, the switch interprets the next sequential key entry as simply a comment attached to the preceding key entry. Where a public key file has more than one entry, ensure that all entries terminate with a new line (CR). While this is optional for the last entry in the file, not adding a new line to the last entry creates an error potential if you either add another key to the file at a later time or change the order of the keys in the file.

An attempt to copy a client public-key file into the switch has failed and the switch lists one of the following messages.

```
Download failed: overlength key in key file.
```

```
Download failed: too many keys in key file.
```

```
Download failed: one or more keys is not a valid RSA
public key.
```

The public key file you are trying to download has one of the following problems:

- A key in the file is too long. The maximum key length is 1024 characters, including spaces. This could also mean that two or more keys are merged together instead of being separated by a <CR><LF>.
- There are more than ten public keys in the key file.
- One or more keys in the file is corrupted or is not a valid rsa public key.

Client ceases to respond ("hangs") during connection phase. The switch does not support data compression in an SSH session. Clients will often have compression turned on by default, but will disable it during the negotiation phase. A client which does not recognize the compression-request FAILURE response may fail when attempting to connect. Ensure that compression is turned off before attempting a connection to prevent this problem.

TACACS-Related Problems

Event Log. When troubleshooting TACACS+ operation, check the switch's Event Log for indications of problem areas.

All Users Are Locked Out of Access to the Switch. If the switch is functioning properly, but no username/password pairs result in console or Telnet access to the switch, the problem may be due to how the TACACS+ server and/or the switch are configured. Use one of the following methods to recover:

- Access the TACACS+ server application and adjust or remove the configuration parameters controlling access to the switch.
- If the above method does not work, try eliminating configuration changes in the switch that have not been saved to flash (boot-up configuration) by causing the switch to reboot from the boot-up configuration (which includes only the configuration changes made prior to the last **write memory** command.) If you did not use **write memory** to save the authentication configuration to flash, then pressing the Reset button or cycling the power reboots the switch with the boot-up configuration.
- Disconnect the switch from network access to any TACACS+ servers and then log in to the switch using either Telnet or direct console port access. Because the switch cannot access a TACACS+ server, it will default to local authentication. You can then use the switch's local Operator or Manager username/password pair to log on.
- As a last resort, use the Clear/Reset button combination to reset the switch to its factory default boot-up configuration. Taking this step means you will have to reconfigure the switch to return it to operation in your network.

No Communication Between the Switch and the TACACS+ Server Application. If the switch can access the server device (that is, it can **ping** the server), then a configuration error may be the problem. Some possibilities include:

- The server IP address configured with the switch's tacacs-server host command may not be correct. (Use the switch's **show tacacs-server** command to list the TACACS+ server IP address.)

- The encryption key configured in the server does not match the encryption key configured in the switch (by using the **tacacs-server key** command). Verify the key in the server and compare it to the key configured in the switch. (Use **show tacacs-server** to list the global key. Use **show config** or **show config running** to list any server-specific keys.)
- The accessible TACACS+ servers are not configured to provide service to the switch.

Access Is Denied Even Though the Username/Password Pair Is Correct. Some reasons for denial include the following parameters controlled by your TACACS+ server application:

- The account has expired.
- The access attempt is through a port that is not allowed for the account.
- The time quota for the account has been exhausted.
- The time credit for the account has expired.
- The access attempt is outside of the time frame allowed for the account.
- The allowed number of concurrent logins for the account has been exceeded

For more help, refer to the documentation provided with your TACACS+ server application.

Unknown Users Allowed to Login to the Switch. Your TACACS+ application may be configured to allow access to unknown users by assigning them the privileges included in a *default user* profile. Refer to the documentation provided with your TACACS+ server application.

System Allows Fewer Login Attempts than Specified in the Switch Configuration. Your TACACS+ server application may be configured to allow fewer login attempts than you have configured in the switch with the **aaa authentication num-attempts** command.

TimeP, SNTP, or Gateway Problems

The Switch Cannot Find the Time Server or the Configured Gateway .

TimeP, SNTP, and Gateway access are through the primary VLAN, which in the default configuration is the DEFAULT_VLAN. If the primary VLAN has been moved to another VLAN, it may be disabled or does not have ports assigned to it.

VLAN-Related Problems

Monitor Port. When using the monitor port in a multiple VLAN environment, the switch handles broadcast, multicast, and unicast traffic output from the monitor port as follows:

- If the monitor port is configured for tagged VLAN operation on the same VLAN as the traffic from monitored ports, the traffic output from the monitor port carries the same VLAN tag.
- If the monitor port is configured for untagged VLAN operation on the same VLAN as the traffic from the monitored ports, the traffic output from the monitor port is untagged.
- If the monitor port is not a member of the same VLAN as the traffic from the monitored ports, traffic from the monitored ports does not go out the monitor port.

None of the devices assigned to one or more VLANs on an 802.1Q-compliant switch are being recognized. If multiple VLANs are being used on ports connecting 802.1Q-compliant devices, inconsistent VLAN IDs may have been assigned to one or more VLANs. For a given VLAN, the same VLAN ID must be used on all connected 802.1Q-compliant devices.

Link Configured for Multiple VLANs Does Not Support Traffic for One or More VLANs. One or more VLANs may not be properly configured as “Tagged” or “Untagged”. A VLAN assigned to a port connecting two 802.1Q-compliant devices must be configured the same on both ports. For example, VLAN_1 and VLAN_2 use the same link between switch “X” and switch “Y”.

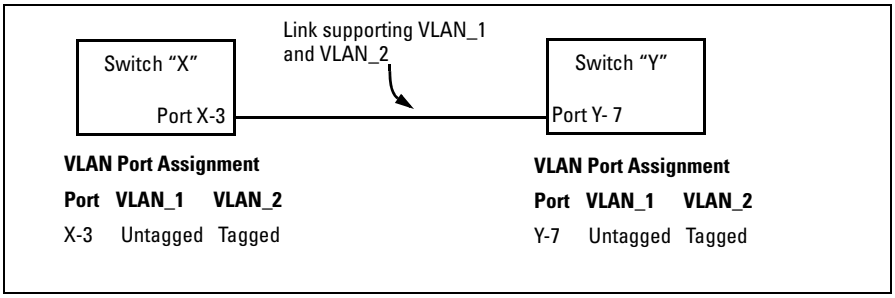

Figure C-9. Example of Correct VLAN Port Assignments on a Link

1. If VLAN_1 (VID=1) is configured as "Untagged" on port 3 on switch "X", then it must also be configured as "Untagged" on port 7 on switch "Y". Make sure that the VLAN ID (VID) is the same on both switches.
2. Similarly, if VLAN_2 (VID=2) is configured as "Tagged on the link port on switch "A", then it must also be configured as "Tagged" on the link port on switch "B". Make sure that the VLAN ID (VID) is the same on both switches.

Duplicate MAC Addresses Across VLANs. The switches covered by this guide operate with multiple forwarding databases. Thus, duplicate MAC addresses occurring on different VLANs can appear where a device having one MAC address is a member of more than one 802.1Q VLAN, and the switch port to which the device is linked is using VLANs (instead of STP or trunking) to establish redundant links to another switch. If the other device sends traffic over multiple VLANs, its MAC address will consistently appear in multiple VLANs on the switch port to which it is linked.

Note that attempting to create redundant paths through the use of VLANs will cause problems with some switches. One symptom is that a duplicate MAC address appears in the Port Address Table of one port, and then later appears on another port. While the switches covered by this guide have multiple forwarding databases, and thus does not have this problem, some switches with a single forwarding database for all VLANs may produce the impression that a connected device is moving among ports because packets with the same MAC address but different VLANs are received on different ports. You can avoid this problem by creating redundant paths using port trunks or spanning tree.

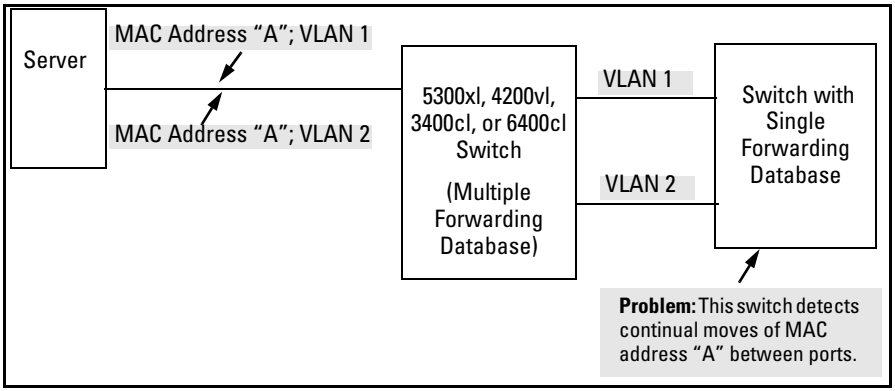

Figure C-10. Example of Duplicate MAC Address

Using the Event Log To Identify Problem Sources

The Event Log records operating events as single-line entries listed in chronological order, and serves as a tool for isolating problems. Each Event Log entry is composed of five fields:

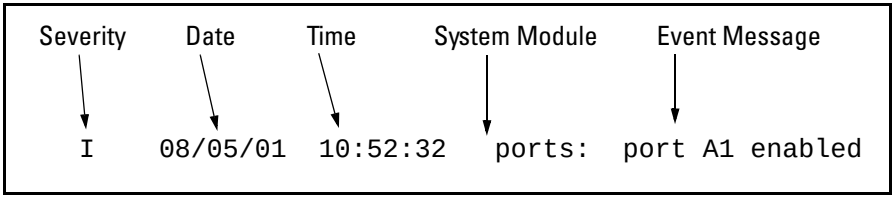

Severity is one of the following codes:

- **I** (information) indicates routine events.
- **W** (warning) indicates that a service has behaved unexpectedly.
- **M** (major) indicates that a severe switch error has occurred.
- **D** (debug) reserved for ProCurve internal diagnostic information.

Date is the date in *mm/dd/yy* format that the entry was placed in the log.

Time is the time in *hh:mm:ss* format that the entry was placed in the log.

System Module is the internal module (such as “ports” for port manager) that generated the log entry. If VLANs are configured, then a VLAN name also appears for an event that is specific to an individual VLAN. Table C-1 on page C-28 lists the individual modules.

Event Message is a brief description of the operating event.

The Event Log holds up to 1000 lines in chronological order, from the oldest to the newest. Each line consists of one complete event message. Once the log has received 1000 entries, it discards the current oldest line each time a new line is received. The Event Log window contains 14 log entry lines and can be positioned to any location in the log.

The Event Log will be *erased* if power to the switch is interrupted.

(The Event Log is *not* erased by using the **Reboot Switch** command in the Main Menu.)

Table C-1. Event Log System Modules

Module	Event Description	Module	Event Description
addrMgr	Address table	timep	Time protocol
chassis	switch hardware	udpf	UDP broadcast forwarder
bootp	bootp addressing	vlan	VLAN operations
connfilt	Connection-Rate filtering	RateLim	Rate-limiting
console	Console interface		
dhcp	DHCP addressing		
download	file transfer		
FFI	Find, Fix, and Inform -- available in the console Event Log and web browser interface alert log		
garp	GARP/GVRP		
igmp	IP Multicast		
ip	IP-related		
ipx	Novell Netware		
lacp	Dynamic LACP trunks		
ldbal	Load-Balance Protocol (meshing)		
lldp	Link-Layer Discovery Protocol		
maclock	MAC lockdown and MAC lockout		
mgr	Console management		
PIM	Protocol-Independent multicast		
ports	Change in port status; static trunks		
radius	RADIUS authentication		
snmp	SNMP communications		
ssh	Secure-Shell status		
ssl	Secure sockets layer status		
stp	Spanning Tree		
sys, system	Switch management		
telnet	Telnet activity		
tcp	Transmission control		
tftp	File transfer for new OS or config.		

Menu: Entering and Navigating in the Event Log

From the Main Menu, select **Event Log**.

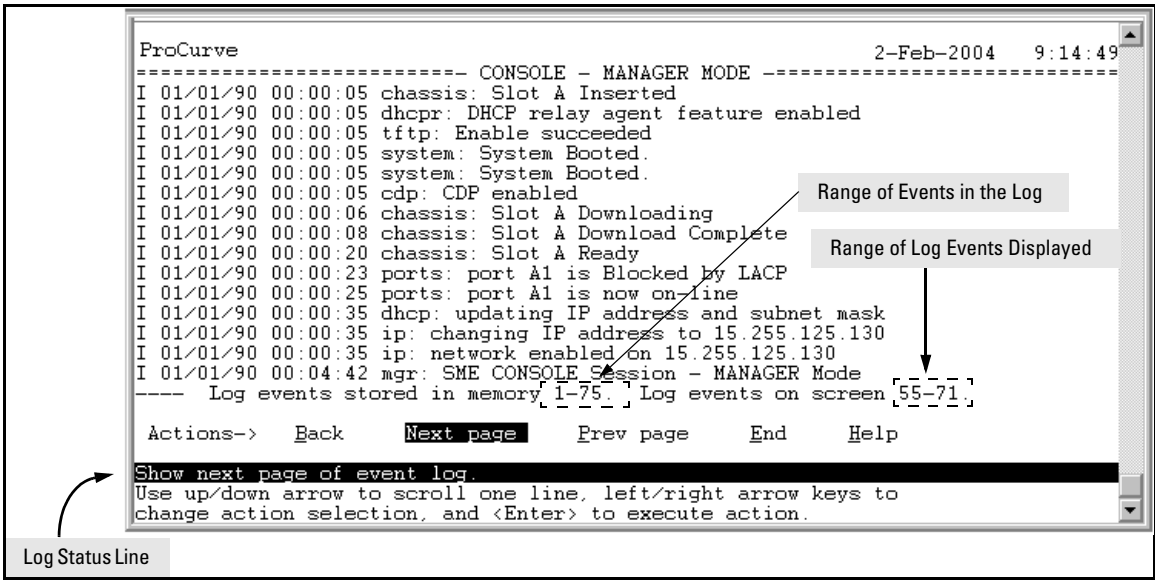

Figure C-11. Example of an Event Log Display

The *log status line* at the bottom of the display identifies where in the sequence of event messages the display is currently positioned.

To display various portions of the Event Log, either preceding or following the currently visible portion, use either the actions listed at the bottom of the display (**Next page**, **Prev page**, or **End**), or the keys described in the following table:

Table C-2. Event Log Control Keys

Key	Action
[N]	Advance the display by one page (next page).
[P]	Roll back the display by one page (previous page).
[↓]	Advance display by one event (down one line).
[↑]	Roll back display by one event (up one line).
[E]	Advance to the end of the log.
[H]	Display Help for the Event Log.

CLI: Listing Events

Syntax: show logging [-a] [<search-text>]

Uses the CLI to list:

- *Events recorded since the last boot of the switch*
- *All events recorded*
- *Event entries containing a specific keyword, either since the last boot or all events recorded*

show logging

Lists recorded log messages since last reboot.

show logging -a

Lists all recorded log messages, including those before the last reboot.

show logging -a system

Lists log messages with "system" in the text or module name.

show logging system

Lists all log messages since the last reboot that have "system" in the text or module name.

Reducing Duplicate Event Log and SNMP Trap Messages

Note

This feature is available with all software releases for the Series 3400/6400cl switches, Series 4200vl switches and with software release E.08.xx and greater on the Series 5300xl switches. Initially it applies only to Event Log messages and SNMP traps generated by the PIM software module.

A recurring event can generate a series of duplicate Event Log messages and SNMP traps in a relatively short time. This can flood the Event Log and any configured SNMP trap receivers with excessive, exactly identical messages. To help reduce this problem, the switch uses *log throttle periods* to regulate (throttle) duplicate messages for a given recurring event, and maintains a counter to record how many times it detects duplicates of a particular event since the last system reboot. That is, when the first instance of a particular event or condition generates a message, the switch initiates a log throttle period that applies to all recurrences of that event. If the logged event recurs during the log throttle period, the switch increments the counter initiated by the first instance of the event, but does not generate a new message. If the logged event repeats again after the log throttle period expires, then the switch generates a duplicate of the first message, increments the counter, and starts a new log throttle period during which any additional instances of the event are counted, but not logged. Thus, for a particular, recurring event, the switch displays one instance of the corresponding message in the Event Log for each successive log throttle period applied to recurrences of that event. Also, each logged instance of the event message includes counter data showing how many times the event has occurred since the last reboot. The switch manages messages to SNMP trap receivers in the same way.

The log throttle period for an event depends on the event's severity level:

Severity	Log Throttle Period
I (Information)	6000 Seconds
W (Warning)	600 Seconds
M (Major)	6 Seconds
D (Debug)	60 Seconds

Example of Log Message Throttling. For example, suppose that you configure VLAN 100 on the switch to support PIM operation, but do not configure an IP address. If PIM attempted to use VLAN 100, the switch would generate the first instance of the following Event Log message and counter.

```
W 10/01/04 09:00:33 PIM:No IP address configured on VID 100 (1)
```

The counter indicates that this is the first instance of this event since the switch last rebooted.

Figure C-12. Example of the First Instance of an Event Message and Counter

If PIM operation caused the same event to occur six more times during the initial log throttle period, there would be no further entries in the Event Log. However, if the event occurred again after the log throttle period expired, the switch would repeat the message (with an updated counter) and start a new log throttle period.

This message indicates the original instance of the event (since the last switch reboot).

```
W 10/01/04 09:00:33 PIM:No IP address configured on VID 100 (1)
.
.
.
W 10/01/04 09:28:42 PIM:No IP address configured on VID 100 (8)
```

Original Counter from First Log Throttle Period

The duplicate of the original message is the first instance of the event since the previous log throttle period expired, and indicates that a new log throttle period has begun for this event..

The counter now indicates that this is the eighth instance of this event since the switch last rebooted.

Figure C-13. Example of Duplicate Messages Over Multiple Log Throttling Periods

Note that if the same type of event occurs under different circumstances, the switch handles these as unrelated events for the purpose of Event Log messages. For example, if PIM operation simultaneously detected that VLANs 100 and 205 were configured without IP addresses, you would see log messages similar to the following:

These two messages report separate events involving separate log throttle periods and separate counters.

```
W 10/01/04 09:00:33 PIM:No IP address configured on VID 100 (1)
W 10/01/04 09:00:33 PIM:No IP address configured on VID 205 (1)
.
.
.
```

Figure C-14. Example of Log Messages Generated by Unrelated Events of the Same Type

Example of Event Counter Operation. Suppose the switch detects the following after a reboot:

- Three duplicate instances of the PIM "Send error" during the first log throttle period for this event
- Five more instances of the same Send error during the second log throttle period for this event
- Four instances of the same Send error during the third log throttle period for this event

In this case, the duplicate message would appear three times in the Event Log (once for each log throttle period for the event being described), and the Duplicate Message Counter would increment as shown in table C-3. (The same operation would apply for messages sent to any configured SNMP trap receivers.)

Table C-3. How the Duplicate Message Counter Increments

Instances During 1st Log Throttle Period	Instances During 2nd Log Throttle Period	Instances During 3rd Log Throttle Period	Duplicate Message Counter*
3			1
	5		4
		4	9

*This value always comprises the first instance of the duplicate message in the current log throttle period plus all previous occurrences of the duplicate message occurring since the switch last rebooted.

Debug and Syslog Messaging Operation

The switch's Event Log records switch-level progress, status, and warning messages. The Debug/System-Logging (*Syslog*) feature provides a method for recording messages you can use to help in debugging network-level problems, such as routing misconfigurations and other network protocol details.

Debug enables you to specify the types of event notification messages to send to external devices. Debug messaging reports on these event types:

- ACL "deny" matches
- Selected IP routing events
- Events that generate messages for the switch's Event Log

You can configure the switch to send debug messages to these destinations:

- Up to six Syslog servers
- A CLI session through direct RS-232 console, Telnet, or SSH

Event Notification Logging	—			Automatically sends switch-level event messages to the switch's Event Log. Debug and Syslog do not affect this operation, but add the capability of directing Event Log messaging to an external file.
Optional **Debug** Commands	**all**			Assigns debug logging to the configured debug destination(s) for all ACL, Event Log, IP-OSPF, and IP-RIP options.
	acl			Assigns ACL Syslog logging to the debug destination(s). When there is a match with a "deny" ACE, directs the resulting message to the configured debug destination(s).
	event			Assigns standard Event Log messages to the debug destination(s). (The same messages are also sent to the switch's Event Log, regardless of whether you enable this option.)
	IP			
		ospf		Assigns OSPF event logging to the debug destination(s).
		rip		Assigns RIP event logging to the debug destination(s).
	lldp			Assigns LLDP debug logging to the debug destination(s).
Debug Destinations	**Destination**		**logging**	Used to disable or re-enable Syslog logging if one or more Syslog servers are already configured by the separate **logging** < ***ip-addr*** > command. Optionally, also specifies the destination (facility) subsystem the Syslog servers must use.
			session	Assigns or re-assigns destination status to the terminal device most recently using this command to request debug output.

Figure C-15. Event Messaging Structure

Debug logging requires a logging destination (Syslog server and/or a session type), and involves the **logging** and **debug destination** commands. Actions you can perform with Debug and Syslog operation include:

Configure the switch to send Event Log messages to one or more Syslog servers. Included is the option to send the messages to the User log facility (default) on the configured server(s) or to another log facility.

Note

As of September 2004, the **logging facility** < *facility-name* > option (described on page C-40) is available on these switch models:

- Series 5300xl switches (software release E.08.xx or greater)
- Series 4200vl switches
- Series 4100gl switches (software release G.07.50 or greater)
- Series 3400cl switches
- Series 6400cl switches
- Series 2800 switches
- Series 2600 switches and the Switch 6108 (software release H.07.30 or greater)

For the latest feature information on ProCurve switches, visit the ProCurve Networking web site and check the latest release notes for the switch products you use.

- Configure the switch to send Event Log messages to the current management-access session (serial-connect CLI, Telnet CLI, or SSH).
- Disable all Syslog debug logging while retaining the Syslog addresses from the switch configuration. This allows you to configure Syslog messaging and then disable and re-enable it as needed.
- Display the current debug configuration. If Syslog logging is currently active, this includes the Syslog server list.
- Display the current Syslog server list when Syslog logging is disabled.

Debug Command Operation

As shown in figure C-15, the **debug** command performs two main functions:

- Specifies the type(s) of event messaging to send to a destination.
- Specifies the destination(s) of the selected message types.

Except as noted below, rebooting the switch returns the debug destination and debug message types to their default settings (disabled).

Note Using the **logging < *dest-ip-addr* >** command to configure a Syslog server address creates an exception to the above general operation. Refer to "Syslog Operation" on page C-39.

Debug Types

This section describes the types of debug messages the switch can send to configured debug destinations.

Syntax: [no] debug < *debug-type* >

acl

When a match occurs on an ACL "deny" Access Control Entry (with **log** *configured), the switch sends an ACL message to the configured debug destination(s). For more on ACLs, refer to the chapter titled "Access Control Lists" in the Advanced Traffic Management Guide for your switch. (Default: Disabled)*

all

Configures the switch to send all debug types to the configured debug destination(s). (Default: Disabled)

event

Configures the switch to send Event Log messages to the configured debug destination(s). ***Note:*** *This has no effect on event notification messages the switch routinely sends to the Event Log itself. Also, this debug type is automatically enabled in these cases:*

- *If there is currently no Syslog server address configured and you use* **logging < *ip-addr* >** *to configure an address.*
- *If there is currently at least one Syslog server address configured and the switch is rebooted or reset.*

ip

Enables all IP-OSPF message types for the configured destinations.

lldp

Enables all LLDP message types for the configured destinations.

Syntax: [no] debug < *debug-type* > *(Continued)*

ip [ospf < adj | event | flood | lsa-generation | packet | retransmission | spf >]

For the configured debug destination(s):

ospf < adj | event | flood | lsa-generation | packet | retransmission | spf > — *Enables the specified IP-OSPF message type.*

adj — *Adjacency changes.*
event — *OSPF events.*
flood — *Information on flood messages.*
lsa-generation — *New LSAs added to database.*
packet — *Packets sent/received.*
retransmission — *Retransmission timer messages.*
spf — *Path recalculation messages.*

ip [rip < database | event | trigger >]

rip < database | event | trigger > > — *Enables the specified RIP message type for the configured destination(s).*

database— *Display database changes.*

event— *Display RIP events.*

trigger— *Display trigger messages.*

(Default: Event (log) message type.)

Debug Destinations

Debug enables you to disable and re-enable Syslog messaging to configured servers, and to designate a CLI session to receive messaging of any debug type.

Syntax: [no] debug destination < logging | session >

logging

This command enables Syslog logging to the configured Syslog server(s). That is, the switch sends the debug message types (specified by the **debug < *debug-type* >** *command in the preceding section) to the configured Syslog server(s). (Default: Logging disabled)*

(To configure a Syslog server IP address, refer to "Syslog Operation" on page C-39.)

Note: *Debug messages from Series 5300xl switches running software release E.07.21 or greater, Series 4200vl switches, and any 3400cl/6400cl switches carry a "debug" severity level. Because some Syslog servers, in their default configuration, ignore Syslog messages with this severity level, you should ensure that the Syslog servers you intend to receive debug messages are configured to accept the "debug" severity level. For more information, refer to* "Operating Notes for Debug and Syslog" on page C-44.

session

*Enables or disables transmission of event notification messages to the CLI session that most recently executed this command. The session can be on any one terminal emulation device with serial, Telnet, or SSH access to the CLI at the Manager level prompt (***ProCurve#_** *). If more than one terminal device has a console session with the CLI, you can redirect the destination from the current device to another device. Do so by executing* **debug destination session** *in the CLI on the terminal device on which you now want to display event messages.*

Event message types received on the selected CLI session are those specified by the **debug < *debug-type* >** *command. (Refer to* "Debug Types" on page C-36.*)*

Syslog Operation

Syslog is a client-server logging tool that allows a client switch to send event notification messages to a networked device operating with Syslog server software. Messages sent to a Syslog server can be stored to a file for later debugging analysis. Use of Syslog requires that you set up a Syslog server application on a networked host accessible to the switch. (Refer to the documentation for the Syslog server application you select.) Except as described below, you must use the **debug** command to specify the message types the switch sends to the configured Syslog server(s).

Syntax: [no] logging < *syslog-ip-addr* >

Enables or disables Syslog messaging to the specified IP address. You can configure up to six addresses. If you configure an address when none are already configured, this command enables destination logging (Syslog) and the Event debug type. Thus, at a minimum, the switch begins sending Event Log messages to the configured Syslog server(s). The ACL, IP-OSPF, and/or IP-RIP message types will also be sent to the Syslog server(s) if they are currently enabled debug types. (Refer to "Debug Types" on page C-36.*)*

no logging *removes all currently configured Syslog logging destinations from the switch.*

no logging < *syslog-ip-address* > *removes only the specified Syslog logging destination from the switch.*

*If you use the "***no***" form of the command to delete the only remaining logging address, debug destination logging is disabled on the switch, but the Event debug type is not changed from its current setting.*

To block messages to the configured Syslog server(s) from any currently enabled debug type, use **no debug < *debug-type* >**. *(Refer to* "Debug Types" on page C-36.*)*

To disable Syslog logging on the switch without deleting the server addresses, use **no debug destination logging**. *Note that, unlike the case where there are no Syslog servers configured, if one or more Syslog servers are already configured, but Syslog messaging is disabled, adding a new server address to those already configured does not re-enable Syslog messaging. In this case, you must use* **debug destination logging** *to re-enable Syslog messaging.*

Syntax: [no] logging facility < *facility-name* >

The logging facility specifies the destination subsystem the Syslog server(s) must use. (All configured Syslog servers must use the same subsystem.) ProCurve recommends the default (user) subsystem unless your application specifically requires another subsystem. Options include:

user *(the default) — Random user-level messages*
kern — *Kernel messages*
mail — *Mail system*
daemon — *System daemons*
auth — *Security/Authorization messages*
syslog — *Messages generated internally by Syslog*
lpr — *Line-Printer subsystem*
news — *Netnews subsystem*
uucp — *uucp subsystem*
cron — *cron/at subsystem*
sys9 — *cron/at subsystem*
sys10 - sys14 — *Reserved for system use*
local10 - local17 — *Reserved for system use*

For a listing of applicable ProCurve switches, refer to the Note on page C-35.

Viewing the Debug Configuration

Syntax: show debug

This command displays the currently configured debug logging destination(s) and type(s). For examples of show debug output, refer to figure C-16 on page C-42.

Steps for Configuring Debug and Syslog Messaging

1. Skip this step if you do not want to use a Syslog server.

   If you want a Syslog server as a destination for debug messaging:

   a. Use this command to configure the Syslog server IP address and enable Syslog logging:

      `ProCurve(config)# logging` < *ip-addr* >

Using this command when there are no Syslog server IP addresses already configured enables both debug messaging to a Syslog server and the Event debug-type, which means that the switch begins sending Event Log messages to the server, regardless of other debug types that may be configured.

b. Use the command in step "a" to configure any additional Syslog servers you want to use, up to a total of six. (When multiple server IP addresses are configured, the switch sends the selected debug message types to all such addresses.)

c. If you want Event Log messages sent to the Syslog server, skip this step. Otherwise, use this command to block Event Log messages to the server:

```
ProCurve# no debug event
```

2. If you do not want a CLI session for a destination, skip this step.

   Otherwise, from the device to which you want the switch to send debug messages:

   a. Use a serial, Telnet, or SSH connection to access the switch's CLI.

   b. Execute this command:

```
ProCurve# debug destination session
```

3. Enable the debug types for which you want messages sent to the Syslog server(s) and/or the current session device:

   `ProCurve# debug` < acl | all | event | ip [ospf-opt]>

   Repeat this step if necessary to enable multiple debug types.

Example: Suppose that there are no Syslog servers configured on the switch (the default). Configuring one Syslog server enables debug logging to that server and also enables Event Log messages to be sent to the server.

```
ProCurve(config)# show debug

Debug Logging
 Destination:    None
 Enabled debug types:
  None are enabled.

ProCurve(config)# logging 18.28.38.164
ProCurve(config)# write mem

ProCurve(config)# show debug

Debug Logging
 Destination:
  Logging --
    18.28.38.164
    Facility = user
 Enabled debug types:
  event
```

Displays the default debug configuration. (There are no Syslog server IP addresses or debug types configured.)

When the logging command configures a Syslog IP address, the switch automatically enables debug messaging to the Syslog address, the **user** facility on the Syslog server, and the Event debug message type.

Figure C-16. Example of Configuring Basic Syslog Operation

Note that after you enable Syslog logging, if you do not want Event Log messages sent to the Syslog server(s), you can block such messages by executing **no debug event**. (This has no effect on standard logging of messages in the switch's Event Log.)

Example. Suppose that you want to:

- Configure Syslog logging of ACL and IP-OSPF packet messages on a Syslog server at 18.38.64.164 (with **user** as the default logging facility).
- Also display these messages in the CLI session of your terminal device's management access to the switch.
- Prevent the Switch's standard Event Log messages from going to the Syslog server and the CLI.

Assuming the debug/Syslog feature is disabled on the switch, you would use the commands shown in figure C-17 to configure the above operation.

```
ProCurve# config
ProCurve(config)# logging 18.38.64.164
ProCurve(config)# show debug
Debug Logging
 Destination:
  Logging --
    18.38.64.164
 Enabled debug types:
  event
ProCurve(config)# no debug event
ProCurve(config)# debug acl
ProCurve(config)# debug ip ospf packet
ProCurve(config)# debug destination session
ProCurve(config)# show debug
Debug Logging
 Destination:
  Logging --
    18.38.64.164
    Facility = user
  Session
 Enabled debug types
  ip ospf packet
  acl log
```

Configure a Syslog server IP. (Assumes no other Syslog server IP in configuration.) This is an active debug destination for any configured debug types.

Display resulting configuration.

Remove unwanted event message logging to debug destinations.

Configure the debug types you want sent to the Syslog server and the CLI session.

Configure the CLI session as a debug destination.

Show the complete debug/Syslog configuration.

Figure C-17. Example Debug/Syslog Configuration for Multiple Types and Destinations

Operating Notes for Debug and Syslog

- **Rebooting the Switch or pressing the Reset button resets the Debug Configuration.**

Debug Option	Effect of a Reboot or Reset
logging (destination)	If any Syslog server IP addresses are in the startup-config file, they are saved across a reboot and the logging destination option remains enabled. Otherwise, the logging destination is disabled.
Session (destination)	Disabled.
ACL (event type)	Disabled.
All (event type)	Disabled.
Event (event type)	If a Syslog server is configured in the startup-config file, resets to enabled, regardless of prior setting. Disabled if no Syslog server is configured.
IP (event type)	Disabled.

- **Debug commands do not affect message output to the Event Log.** As a separate option, invoking debug with the **event** option causes the switch to send Event Log messages to whatever debug destination(s) you configure (session and/or logging), as well as to the Event Log.
- **Ensure that your Syslog server(s) will accept Debug messages.** All Syslog messages resulting from debug operation carry a “debug” severity. If you configure the switch to transmit debug messages to a Syslog server, ensure that the server’s Syslog application is configured to accept the “debug” severity level. (The default configuration for some Syslog applications ignores the “debug” severity level.)

Diagnostic Tools

Diagnostic Features

Feature	Default	Menu	CLI	Web
Port Auto negotiation	n/a	n/a	n/a	n/a
Ping Test	n/a	—	page C-48	page C-47
Link Test	n/a	—	page C-48	page C-47
Display Config File	n/a	—	page C-50	page C-50
Admin. and Troubleshooting Commands	n/a	—	page C-52	—
Factory-Default Config	page C-57 (Buttons)	—	page C-57	—
Port Status	n/a	pages B-9 and B-10	pages B-9 and B-10	pages B-9 and B-10

Port Auto-Negotiation

When a link LED does not light (indicating loss of link between two devices), the most common reason is a failure of port auto-negotiation between the connecting ports. If a link LED fails to light when you connect the switch to a port on another device, do the following:

1. Ensure that the switch port and the port on the attached end-node are both set to **Auto** mode.
2. If the attached end-node does not have an **Auto** mode setting, then you must manually configure the switch port to the same setting as the end-node port. Refer to Chapter 10, “Port Status and Basic Configuration”.

Ping and Link Tests

The Ping test and the Link test are point-to-point tests between your switch and another IEEE 802.3-compliant device on your network. These tests can tell you whether the switch is communicating properly with another device.

Note

To respond to a Ping test or a Link test, the device you are trying to reach must be IEEE 802.3-compliant.

Ping Test. This is a test of the path between the switch and another device on the same or another IP network that can respond to IP packets (ICMP Echo Requests).

Link Test. This is a test of the connection between the switch and a designated network device on the same LAN (or VLAN, if configured). During the link test, IEEE 802.2 test packets are sent to the designated network device in the same VLAN or broadcast domain. The remote device must be able to respond with an 802.2 Test Response Packet.

Web: Executing Ping or Link Tests

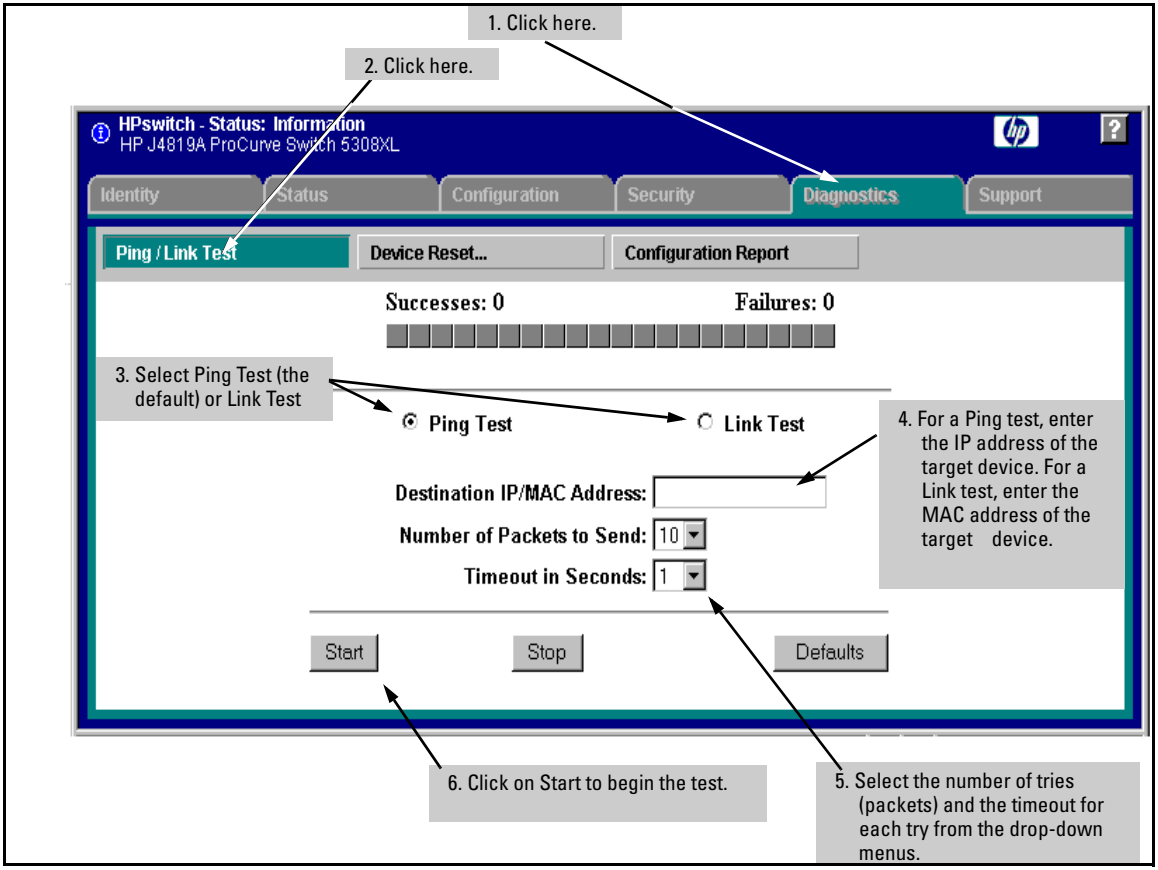

Figure C-18. Link and Ping Test Screen on the Web Browser Interface

Successes indicates the number of Ping or Link packets that successfully completed the most recent test.

Failures indicates the number of Ping or Link packets that were unsuccessful in the last test. Failures indicate connectivity or network performance problems (such as overloaded links or devices).

Destination IP/MAC Address is the network address of the target, or destination, device to which you want to test a connection with the switch. An IP address is in the *X.X.X.X* format where *X* is a decimal number between 0 and 255. A MAC address is made up of 12 hexadecimal digits, for example, 0060b0-080400.

Number of Packets to Send is the number of times you want the switch to attempt to test a connection.

Timeout in Seconds is the number of seconds to allow per attempt to test a connection before determining that the current attempt has failed.

To halt a Link or Ping test before it concludes, click on the Stop button.
To reset the screen to its default settings, click on the Defaults button.

CLI: Ping or Link Tests

Ping Tests. You can issue single or multiple ping tests with varying repetitions and timeout periods. The defaults and ranges are:

- Repetitions: 1 (1 - 999)
- Timeout: 5 seconds (1 - 256 seconds)

Syntax: ping < *ip-address* > [repetitions < 1 - 999 >] [timeout < 1 - 256 >]

Basic Ping Operation

```
ProCurve > ping 10.28.227.103
10.28.227.103 is alive, time = 15 ms
```

Ping with Repetitions

```
ProCurve> ping 10.28.227.103 repetitions 3
10.28.227.103 is alive, iteration 1, time = 15 ms
10.28.227.103 is alive, iteration 2, time = 15 ms
10.28.227.103 is alive, iteration 3, time = 15 ms
```

Ping with Repetitions and Timeout

```
ProCurve > ping 10.28.227.103 repetitions 3 timeout 2
10.28.227.103 is alive, iteration 1, time = 15 ms
10.28.227.103 is alive, iteration 2, time = 10 ms
10.28.227.103 is alive, iteration 3, time = 15 ms
```

Ping Failure

```
ProCurve > ping 10.28.227.105
Target did not respond.
```

Figure C-19. Examples of Ping Tests

To halt a ping test before it concludes, press **[Ctrl] [C]**.

Link Tests. You can issue single or multiple link tests with varying repetitions and timeout periods. The defaults are:

- Repetitions: 1 (1 - 999)
- Timeout: 5 seconds (1 - 256 seconds)

Syntax: link < *mac-address* > [repetitions < 1 - 999 >] [timeout < 1 - 256 >] [vlan < *vlan-id* >]

Basic Link Test	`HP4108#link 0030c1-7fcc40` `Link-test passed.`
Link Test with Repetitions	`ProCurve# link 0030c1-7fcc40 repetitions 3` `802.2 TEST packets sent: 3, responses received: 3`
Link Test with Repetitions and Timeout	`ProCurve# link 0030c1-7fcc40 repetitions 3 timeout 1` `802.2 TEST packets sent: 3, responses received: 3`

Link Test Over a Specific VLAN	`ProCurve# link 0030c1-7fcc40 repetitions 3 timeout 1`
	`vlan 1`
	`802.2 TEST packets sent: 3, responses received: 3`

Link Test Over a Specific VLAN; Test Fail	`ProCurve#link 0030c1-7fcc40 repetitions 3 timeout 1`
	`vlan 222`
	`802.2 TEST packets sent: 3, responses received: 0`

Figure C-20. Example of Link Tests

Displaying the Configuration File

The complete switch configuration is contained in a file that you can browse from either the web browser interface or the CLI. It may be useful in some troubleshooting scenarios to view the switch configuration.

CLI: Viewing the Configuration File

Using the CLI, you can display either the running configuration or the startup configuration. (For more on these topics, see appendix C, “Switch Memory and Configuration”.)

Syntax: write terminal

Displays the running configuration.

show config

Displays the startup configuration.

show running-config

Displays the running-config file.

Web: Viewing the Configuration File

To display the running configuration, through the web browser interface:

1. Click on the **Diagnostics** tab.
2. Click on **[Configuration Report]**
3. Use the right-side scroll bar to scroll through the configuration listing.

Listing Switch Configuration and Operation Details

The **show tech** command outputs, in a single listing, switch operating and running configuration details from several internal switch sources, including:

- Image stamp (software version data)
- Running configuration
- Event Log listing
- Boot History
- Port settings
- Status and counters — port status

- IP routes
- Status and counters — VLAN information
- GVRP support
- Load balancing (trunk and LACP)

Syntax: show tech

Executing **show tech** outputs a data listing to your terminal emulator. However, using your terminal emulator's text capture features, you can also save **show tech** data to a text file for viewing, printing, or sending to an associate. For example, if your terminal emulator is the Hyperterminal application available with Microsoft® Windows® software, you can copy the show tech output to a file and then use either Microsoft Word or Notepad to display the data. (In this case, Microsoft Word provides the data in an easier-to-read format.)

To Copy show tech output to a Text File. This example uses the Microsoft Windows terminal emulator. To use another terminal emulator application, refer to the documentation provided with that application.

1. In Hyperterminal, click on **Transfer** | **Capture Text...**

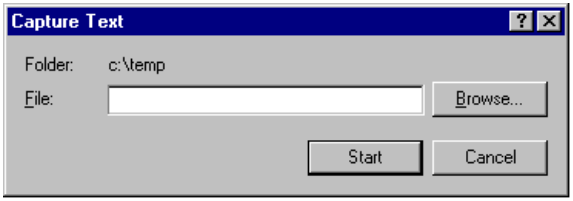

Figure C-21. The Capture Text window of the Hyperterminal Application

2. In the **File** field, enter the path and file name under which you want to store the **show tech** output.

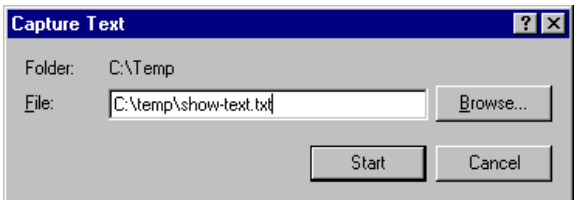

Figure C-22. Example of a Path and Filename for Creating a Text File from show tech Output

3. Click **[Start]** to create and open the text file.

4. Execute **show tech**:

   ```
   ProCurve# show tech
   ```

   a. Each time the resulting listing halts and displays -- MORE --, press the Space bar to resume the listing.
   b. When the CLI prompt appears, the show tech listing is complete. At this point, click on **Transfer** | **Capture Text** | **Stop** in HyperTerminal to stop copying data into the text file created in the preceding steps.

Note

Remember to do the above step to stop HyperTerminal from copying into the text file. Otherwise, the text file remains open to receiving additional data from the HyperTerminal screen.

5. To access the file, open it in Microsoft Word, Notepad, or a similar text editor.

CLI Administrative and Troubleshooting Commands

These commands provide information or perform actions that you may find helpful in troubleshooting operating problems with the switch.

Note

For more on the CLI, refer to chapter 3, “Using the Command Line Reference (CLI)”.

Syntax: show version

Shows the software version currently running on the switch, and the flash image from which the switch booted (primary or secondary).

show boot-history

Displays the switch shutdown history.

show history

Displays the current command history.

Syntax: show version

[no] page

Toggles the paging mode for display commands between continuous listing and per-page listing.

setup

Displays the Switch Setup screen from the menu interface.

repeat

Repeatedly executes the previous command until a key is pressed.

kill

Terminates all other active sessions.

Traceroute Command

The **traceroute** command enables you to trace the route from the switch to a host address.

This command outputs information for each (router) hop between the switch and the destination address. Note that every time you execute **traceroute**, it uses the same default settings unless you specify otherwise for that instance of the command.

Syntax: traceroute < *ip-address* >

Lists the IP address of each hop in the route, plus the time in microseconds for the **traceroute** packet reply to the switch for each hop.

To halt an ongoing traceroute search, press the **[Ctrl] [C]** keys.

[minttl < 1-255 >]

For the current instance of **traceroute**, *changes the minimum number of hops allowed for each probe packet sent along the route. If* **minttl** *is greater than the actual number of hops, then the output includes only the hops at and above the* **minttl** *threshold. (The hops below the threshold are not listed.) If* **minttl** *matches the actual number of hops, only that hop is shown in the output. If* **minttl** *is less than the actual number of hops, then all hops are listed. For any instance of* **traceroute,** *if you want a* **minttl** *value other than the default, you must specify that value. (Default: 1)*

[maxttl < 1-255 >]

For the current instance of **traceroute**, *changes the maximum number of hops allowed for each probe packet sent along the route. If the destination address is further from the switch than* **maxttl** *allows, then* **traceroute** *lists the IP addresses for all hops it detects up to the* **maxttl** *limit. For any instance of* **traceroute,** *if you want a* **maxttl** *value other than the default, you must specify that value. (Default: 30)*

[timeout < 1-120 >]

For the current instance of **traceroute**, *changes the timeout period the switch waits for each probe of a hop in the route. For any instance of* **traceroute,** *if you want a* **timeout** *value other than the default, you must specify that value. (Default: 5 seconds)*

[probes < 1-5 >

For the current instance of **traceroute**, *changes the number of queries the switch sends for each hop in the route. For any instance of* **traceroute,** *if you want a* **probes** *value other than the default, you must specify that value. (Default: 3)*

A Low Maxttl Causes Traceroute To Halt Before Reaching the Destination Address. For example, executing **traceroute** with its default values for a destination IP address that is four hops away produces a result similar to this:

```
   ProCurve Switch 5308XL# traceroute 125.25.24.35
traceroute to 125.25.24.35 ,
                1 hop min, 30 hops max, 5 sec. timeout, 3 probes
 1 10.255.120.2           0 ms       0 ms       0 ms
 2 10.71.217.2            7 ms       3 ms       0 ms
 3 10.243.170.1           0 ms       1 ms       0 ms
 4 125.25.24.35           3 ms       3 ms       0 ms
```

Intermediate router hops with the time taken for the switch to receive acknowledgement of each probe reaching each router.

Destination IP Address

Figure C-23. Example of a Completed Traceroute Enquiry

Continuing from the previous example (figure C-23, above), executing **traceroute** with an insufficient **maxttl** for the actual hop count produces an output similar to this:

Traceroute does not reach destination IP address because of low **maxttl** setting.

```
ProCurve# traceroute 125.25.24.35 maxttl 3
traceroute to 125.25.24.35 ,
                1 hop min, 3 hops max, 5 sec. timeout, 3 probes
 1 10.255.120.2           0 ms       0 ms       0 ms
 2 10.71.217.2            0 ms       0 ms       0 ms
 3 10.243.170.1           0 ms *        0 ms
```

The asterisk indicates there was a timeout on the second probe to the third hop.

Figure C-24. Example of Incomplete Traceroute Due to Low Maxttl Setting

If A Network Condition Prevents Traceroute from Reaching the Destination. Common reasons for Traceroute failing to reach a destination include:

- Timeouts (indicated by one asterisk per probe, per hop; see figure C-24, above.)
- Unreachable hosts
- Unreachable networks
- Interference from firewalls
- Hosts configured to avoid responding

Executing traceroute where the route becomes blocked or otherwise fails results in an output marked by timeouts for all probes beyond the last detected hop. For example with a maximum hop count of 7 (**maxttl** = 7), where the route becomes blocked or otherwise fails, the output appears similar to this:

At hop 3, the first and third probes timed out but the second probe reached the router.

All further probes within the **maxttl** timed-out without finding a router or the destination IP address.

```
ProCurve# traceroute 107.64.197.100 maxttl 7
traceroute to 107.64.197.100 ,
                1 hop min, 7 hops max, 5 sec. timeout, 3 probes
 1 10.255.120.2            0 ms        0 ms        0 ms
 2 10.71.217.2             0 ms        0 ms        0 ms
 3  * 10.243.170.1         0 ms  *
 4  *   *   *
 5  *   *   *
 6  *   *   *
 7  *   *   *
```

An asterisk indicates a timeout without finding the next hop.

Figure C-25. Example of Traceroute Failing to Reach the Destination Address

Restoring the Factory-Default Configuration

As part of your troubleshooting process, it may become necessary to return the switch configuration to the factory default settings. This process momentarily interrupts the switch operation, clears any passwords, clears the console Event Log, resets the network counters to zero, performs a complete self test, and reboots the switch into its factory default configuration including deleting an IP address. There are two methods for resetting to the factory-default configuration:

- CLI
- Clear/Reset button combination

Note

ProCurve recommends that you save your configuration to a TFTP server before resetting the switch to its factory-default configuration. You can also save your configuration via Xmodem, to a directly connected PC.

CLI: Resetting to the Factory-Default Configuration

This command operates at any level *except* the Operator level.

Syntax: erase startup-configuration

Deletes the startup-config file in flash so that the switch will reboot with its factory-default configuration.

Note

The **erase startup-config** command does not clear passwords.

Clear/Reset: Resetting to the Factory-Default Configuration

To execute the factory default reset, perform these steps:

1. Using pointed objects, simultaneously press both the Reset and Clear buttons on the front of the switch.

2. Continue to press the Clear button while releasing the Reset button.
3. When the Self Test LED begins to flash, release the Clear button.

   The switch will then complete its self test and begin operating with the configuration restored to the factory default settings.

Restoring a Flash Image

The switch can lose its operating system if either the primary or secondary flash image location is empty or contains a corrupted OS file and an operator uses the **erase flash** command to erase a good OS image file from the opposite flash location.

To Recover from an Empty or Corrupted Flash State. Use the switch's console serial port to connect to a workstation or laptop computer that has the following:

- A terminal emulator program with Xmodem capability, such as the HyperTerminal program included in Windows PC software.
- A copy of a good OS image file for the switch.

Note

The following procedure requires the use of Xmodem, and copies an OS image into primary flash only.

This procedure assumes you are using HyperTerminal as your terminal emulator. If you use a different terminal emulator, you may need to adapt this procedure to the operation of your particular emulator.

1. Start the terminal emulator program.
2. Ensure that the terminal program is configured as follows:

   - Baud rate: 9600
   - No parity
   - 8 Bits
   - 1 stop bit
   - No flow control

3. Use the Reset button to reset the switch. The following prompt should then appear in the terminal emulator:

```
Enter h or ? for help.

=>
```

4. Since the OS file is large, you can increase the speed of the download by changing the switch console and terminal emulator baud rates to a high speed. For example:
   a. Change the switch baud rate to 115,200 Bps.

      ```
      => sp 115200
      ```

   b. Change the terminal emulator baud rate to match the switch speed:
      i. In HyperTerminal, select **Call** | **Disconnect**.
      ii. Select **File** | **Properties**.
      iii. click on **[Configure .].**
      iv. Change the baud rate to **115200**.
      v. Click on **[OK]**. In the next window, click on **[OK]** again.
      vi. Select **Call** | **Connect**
      vii. Press **[Enter]** one or more times to display the => prompt.

5. Start the Console Download utility by typing **do** at the => prompt and pressing **[Enter]**:

   ```
   => do
   ```

6. You will then see this prompt:

   ```
   You have invoked the console download utility.
   Do you wish to continue? (Y/N)>_
   ```

7. At the above prompt:
   a. Type **y** (for Yes)
   b. Select **Transfer** | **File** in HyperTerminal.
   c. Enter the appropriate filename and path for the OS image.
   d. Select the **Xmodem** protocol (and not the 1k Xmodem protocol).
   e. Click on **[Send]**.

   If you are using HyperTerminal, you will see a screen similar to the following to indicate that the download is in progress:

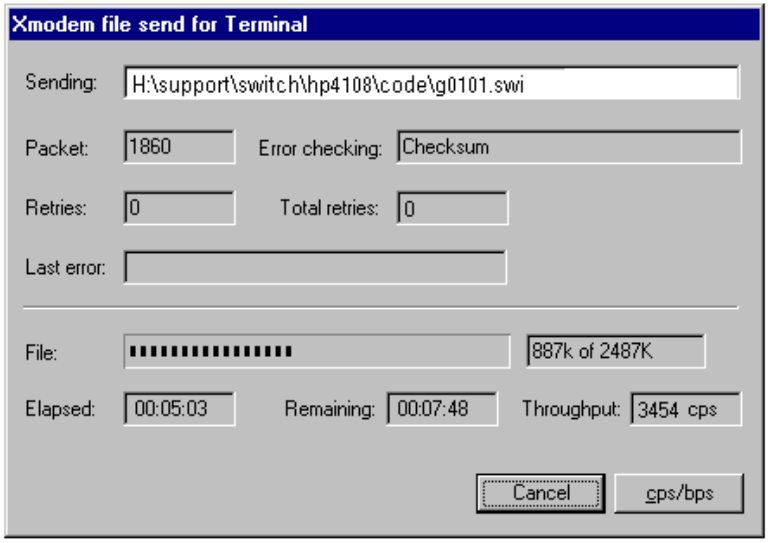

Figure C-26. Example of Xmodem Download in Progress

8. When the download completes, the switch reboots from primary flash using the OS image you downloaded in the preceding steps, plus the most recent startup-config file.

MAC Address Management

Contents

Overview D-2

Determining MAC Addresses D-3

Menu: Viewing the Switch's MAC Addresses D-4

CLI: Viewing the Port and VLAN MAC Addresses D-5

Viewing the MAC Addresses of Connected Devices D-8

Overview

The switch assigns MAC addresses in these areas:

- For management functions, one Base MAC address is assigned to the default VLAN (VID = 1). (All VLANs on the switches covered in this guide use the same MAC address.)
- For internal switch operations: One MAC address per port (See "CLI: Viewing the Port and VLAN MAC Addresses" on page D-5.)

MAC addresses are assigned at the factory. The switch automatically implements these addresses for VLANs and ports as they are added to the switch.

Note

The switch's base MAC address is also printed on a label affixed to the switch.

Determining MAC Addresses

MAC Address Viewing Methods

Feature	Default	Menu	CLI	Web
view switch's base (default vlan) MAC address and the addressing for any added VLANs	n/a	D-4	D-5	—
view port MAC addresses (hexadecimal format)	n/a	—	D-5	—

- **Use the menu interface** to view the switch's base MAC address and the MAC address assigned to any VLAN you have configured on the switch. (The same MAC address is assigned to VLAN1 and all other VLANs configured on the switch.)

Note

The switch's base MAC address is used for the default VLAN (VID = 1) that is always available on the switch. This is true for dynamic VLANs as well; the base MAC address is the same across all VLANs.

- **Use the CLI** to view the switch's port MAC addresses in hexadecimal format.

Menu: Viewing the Switch's MAC Addresses

The Management Address Information screen lists the MAC addresses for:

- Base switch (default VLAN; VID = 1)
- Any additional VLANs configured on the switch.

Also, the Base MAC address appears on a label on the back of the switch.

Note

The Base MAC address is used by the first (default) VLAN in the switch. This is usually the VLAN named "DEFAULT_VLAN" unless the name has been changed (by using the VLAN Names screen). On the switches covered by this guide, the VID (VLAN identification number) for the default VLAN is always "1", *and cannot be changed*.

To View the MAC Address (and IP Address) assignments for VLANs Configured on the Switch:

1. From the Main Menu, Select

   1. Status and Counters

   2. Switch Management Address Information

   If the switch has only the default VLAN, the following screen appears. If the switch has multiple static VLANs, each is listed with its address data.

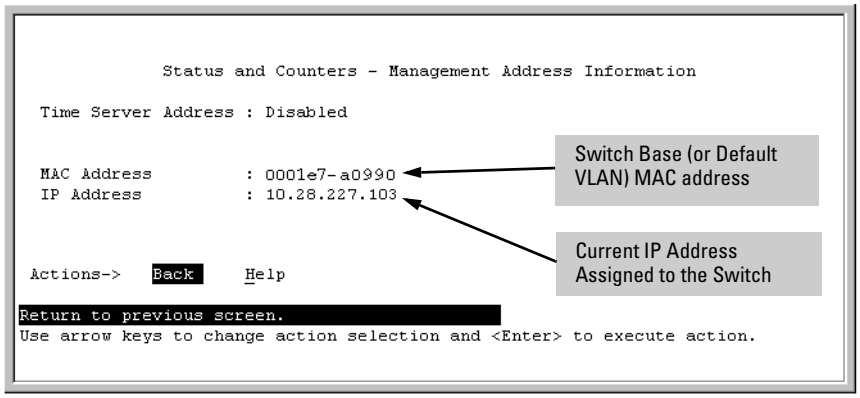

Figure D-1. Example of the Management Address Information Screen

CLI: Viewing the Port and VLAN MAC Addresses

The MAC address assigned to each switch port is used internally by such features as Flow Control and the spanning-tree protocol. Using the **walkmib** command to determine the MAC address assignments for individual ports can sometimes be useful when diagnosing switch operation.

Switch Series	MAC Address Allocation
5300xl and 4200vl	The switch allots 26 MAC addresses per slot. For a given slot, if a four-port module is installed, then the switch uses the first four MAC addresses in the allotment for that slot, and the remaining 22 MAC addresses are unused. If a 24-port module is installed, the switch uses the first 24 MAC addresses in the allotment, and so-on. The switch's base MAC address is assigned to VLAN (VID) 1 and appears in the **walkmib** listing after the MAC addresses for the ports. (All VLANs in the switch have the same MAC address.)
3400cl-24G	This switch uses 24 MAC addresses for the 24 fixed ports, plus two MAC addresses if an optional 10-gigabit expansion module is installed. The switch's base MAC address is assigned to VLAN (VID) 1 and appears in the **walkmib** listing after the MAC addresses for the ports. (All VLANs in the switch have the same MAC address.)
3400cl-48G	Same as for the 3400cl-24G, except this model uses 48 MAC addresses for the 48 fixed ports.
6400cl	These switches use 6 MAC addresses for the 6 fixed ports, plus two MAC addresses if an optional 10-gigabit expansion module is installed. The switch's base MAC address is assigned to VLAN (VID) 1 and appears in the **walkmib** listing after the MAC addresses for the ports. (All VLANs in the switch have the same MAC address.)

To display the switch's MAC addresses, use the **walkmib** command at the command prompt:

Note

This procedure displays the MAC addresses for all ports and existing VLANs in the switch, regardless of which VLAN you select.

1. If the switch is at the CLI Operator level, use the **enable** command to enter the Manager level of the CLI.
2. Type the following command to display the MAC address for each port on the switch:

   ```
   ProCurve# walkmib ifPhysAddress
   ```

(The above command is not case-sensitive.)

For example, with a 4-port module in slot A of a 5304xl switch, a 24-port module in slot B, and four nondefault VLANs configured:

```
ProCurve(config)# walkmib ifphysaddress
ifPhysAddress.1 = 00 04 ea 5e 20 ff
ifPhysAddress.2 = 00 04 ea 5e 20 fe
ifPhysAddress.3 = 00 04 ea 5e 20 fd
ifPhysAddress.4 = 00 04 ea 5e 20 fc
ifPhysAddress.27 = 00 04 ea 5e 20 e5
ifPhysAddress.28 = 00 04 ea 5e 20 e4
ifPhysAddress.29 = 00 04 ea 5e 20 e3
ifPhysAddress.30 = 00 04 ea 5e 20 e2
ifPhysAddress.31 = 00 04 ea 5e 20 e1
ifPhysAddress.32 = 00 04 ea 5e 20 e0
ifPhysAddress.33 = 00 04 ea 5e 20 df
ifPhysAddress.34 = 00 04 ea 5e 20 de
ifPhysAddress.35 = 00 04 ea 5e 20 dd
ifPhysAddress.36 = 00 04 ea 5e 20 dc
ifPhysAddress.37 = 00 04 ea 5e 20 db
ifPhysAddress.38 = 00 04 ea 5e 20 da
ifPhysAddress.39 = 00 04 ea 5e 20 d9
ifPhysAddress.40 = 00 04 ea 5e 20 d8
ifPhysAddress.41 = 00 04 ea 5e 20 d7
ifPhysAddress.42 = 00 04 ea 5e 20 d6
ifPhysAddress.43 = 00 04 ea 5e 20 d5
ifPhysAddress.44 = 00 04 ea 5e 20 d4
ifPhysAddress.45 = 00 04 ea 5e 20 d3
ifPhysAddress.46 = 00 04 ea 5e 20 d2
ifPhysAddress.47 = 00 04 ea 5e 20 d1
ifPhysAddress.48 = 00 04 ea 5e 20 d0
ifPhysAddress.49 = 00 04 ea 5e 20 cf
ifPhysAddress.50 = 00 04 ea 5e 20 ce
ifPhysAddress.282 = 00 04 ea 5e 20 00
ifPhysAddress.381 = 00 04 ea 5e 20 00
ifPhysAddress.431 = 00 04 ea 5e 20 00
ifPhysAddress.456 = 00 04 ea 5e 20 00
ifPhysAddress.481 = 00 04 ea 5e 20 00
ifPhysAddress.4377 =
ProCurve(config)#
```

ifPhysAddress.1 - 4:	Ports A1 - A4 in Slot A (Addresses 5 - 24 in slot A are unused, and addresses 25 and 26 are reserved.)
ifPhysAddress.27 - 50:	Ports B1 - B24 in Slot B (Addresses 51 - 52 in slot B are reserved.)
ifPhysAddress.282	Base MAC Address (MAC Address for default VLAN; VID = 1)
ifPhysAddress.381, 431 456, and 481	Physical addresses for non-default VLANs configured on the switch. On the switches covered by this guide, all VLANs use the same MAC address as the Default VLAN. Refer to "Multiple VLAN Considerations" in the "Static Virtual LANs (VLANs)" chapter of the *AdvancedTraffic Management Guide* for your switch.

Figure D-2. Example of Port MAC Address Assignments on a Series 5300xl Switch

```
ProCurve Switch 2824(config)# walkmib ifphysaddress
ifPhysAddress.1 = 00 08 83 08 db 3f
ifPhysAddress.2 = 00 08 83 08 db 3e
ifPhysAddress.3 = 00 08 83 08 db 3d
ifPhysAddress.4 = 00 08 83 08 db 3c
ifPhysAddress.5 = 00 08 83 08 db 3b
ifPhysAddress.6 = 00 08 83 08 db 3a
ifPhysAddress.7 = 00 08 83 08 db 39
ifPhysAddress.8 = 00 08 83 08 db 38
ifPhysAddress.9 = 00 08 83 08 db 37
ifPhysAddress.10 = 00 08 83 08 db 36
ifPhysAddress.11 = 00 08 83 08 db 35
ifPhysAddress.12 = 00 08 83 08 db 34
ifPhysAddress.13 = 00 08 83 08 db 33
ifPhysAddress.14 = 00 08 83 08 db 32
ifPhysAddress.15 = 00 08 83 08 db 31
ifPhysAddress.16 = 00 08 83 08 db 30
ifPhysAddress.17 = 00 08 83 08 db 2f
ifPhysAddress.18 = 00 08 83 08 db 2e
ifPhysAddress.19 = 00 08 83 08 db 2d
ifPhysAddress.20 = 00 08 83 08 db 2c
ifPhysAddress.21 = 00 08 83 08 db 2b
ifPhysAddress.22 = 00 08 83 08 db 2a
ifPhysAddress.23 = 00 08 83 08 db 29
ifPhysAddress.24 = 00 08 83 08 db 28
ifPhysAddress.25 = 00 08 83 08 db 27
ifPhysAddress.26 = 00 08 83 08 db 26
ifPhysAddress.102 = 00 08 83 08 db 20
ifPhysAddress.4197 =
```

ifPhysAddress.1 - 24: Ports 1 - 24

(A 3400cl-48G switch includes addresses 1 - 48 for the fixed ports.)

ifPhysAddress.25 - 26: Ports 25 - 26

(Addresses 25 - 26 appear only if a 10-gigabit expansion module is installed in the switch. On a 3400cl-48G switch, these ports are numbered 49 and 50.)

ifPhysAddress.102 Base MAC Address (MAC Address for default VLAN; VID = 1)

Figure D-3. Example of Port MAC Address Assignments on a 3400cl-24G Switch

Viewing the MAC Addresses of Connected Devices

Syntax: show mac-address [| mac-addr |

Lists the MAC addresses of the devices the switch has detected, along with the number of the specific port on which each MAC address was detected.

[port-list]

Lists the MAC addresses of the devices the switch has detected, on the specified port(s).

[mac-addr]

Lists the port on which the switch detects the specified MAC address. Returns the following message if the specified MAC address is not detected on any port in the switch:

`MAC address <mac-addr> not found.`

[vlan < vid >]

Lists the MAC addresses of the devices the switch has detected on ports belonging to the specified VLAN, along with the number of the specific port on which each MAC address was detected.

To list the MAC addresses of devices the switch has detected, use the **show mac-address** command.

Daylight Savings Time on ProCurve Switches

This information applies to the following ProCurve switches:

- 212M
- 224M
- 1600M
- 2400M
- 2424M
- 4000M
- 8000M
- Series 2500
- Series 2600
- Series 2800
- Series 3400cl
- Series 4100gl
- Series 4200vl
- Series 5300xl
- Series 6400cl
- 6108
- AdvanceStack Switches
- AdvanceStack Routers

ProCurve switches provide a way to automatically adjust the system clock for Daylight Savings Time (DST) changes. To use this feature you define the month and date to begin and to end the change from standard time. In addition to the value “none” (no time changes), there are five pre-defined settings, named:

- Alaska
- Canada and Continental US
- Middle Europe and Portugal
- Southern Hemisphere
- Western Europe

The pre-defined settings follow these rules:

Alaska:

- Begin DST at 2am the first Sunday on or after April 24th.
- End DST at 2am the first Sunday on or after October 25th.

Canada and Continental US:

- Begin DST at 2am the first Sunday on or after April 1st.
- End DST at 2am the first Sunday on or after October 25th.

Middle Europe and Portugal:

- Begin DST at 2am the first Sunday on or after March 25th.
- End DST at 2am the first Sunday on or after September 24th.

Southern Hemisphere:

- Begin DST at 2am the first Sunday on or after October 25th.
- End DST at 2am the first Sunday on or after March 1st.

Western Europe:

- Begin DST at 2am the first Sunday on or after March 23rd.
- End DST at 2am the first Sunday on or after October 23rd.

A sixth option named "User defined" allows you to customize the DST configuration by entering the beginning month and date plus the ending month and date for the time change. The menu interface screen looks like this (all month/date entries are at their default values):

```
========================= CONSOLE - MANAGER MODE ============================
                    Switch Configuration - System Information

  System Name :     ProCurve Switch 5304XL
  System Contact :
  System Location :

  Inactivity Timeout (min) [0] : 0       MAC Age Time (sec) [300] : 300
  Inbound Telnet Enabled [Yes] : Yes     Web Agent Enabled [Yes] : Yes
  Time Sync Method [None] : TIMEP
  TimeP Mode [Disabled] : Disabled

  Time Zone [0] : 0
  Daylight Time Rule [None] : User-defined
  Beginning month [April] : April        Beginning day [1] : 1
  Ending month [October] : October       Ending day [1] : 1

 Actions->   Cancel     Edit     Save     Help

Use arrow keys to change field selection, <Space> to toggle field choices,
and <Enter> to go to Actions.
```

Select User-defined and press ↓ to display the remaining parameters.

Figure E-1. Menu Interface with "User-Defined" Daylight Time Rule Option

Before configuring a “User defined” Daylight Time Rule, it is important to understand how the switch treats the entries. The switch knows which dates are Sundays, and uses an algorithm to determine on which date to change the system clock, given the configured “Beginning day” and “Ending day”:

- If the configured day is a Sunday, the time changes at 2am on that day.
- If the configured day is not a Sunday, the time changes at 2am on the first Sunday after the configured day.

This is true for both the “Beginning day” and the “Ending day”.

With that algorithm, one should use the value “1” to represent “first Sunday of the month”, and a value equal to “number of days in the month minus 6" to represent “last Sunday of the month”. This allows a single configuration for every year, no matter what date is the appropriate Sunday to change the clock.

— This page is intentionally unused. —

Index

Symbols

=> prompt … C-58

Numerics

802.1x
    LLDP blocked … 15-32
802.1X effect, LLDP … 15-71

A

access
    manager … 15-12
    operator … 15-12
Access Conrtroller Module
    5300xl features not supported … 12-8
access control server … 12-4
Access Controller Module
    BIOS POST event log messages … 12-32
    configuring client VLANs … 12-19
    configuring on network … 12-14
    configuring uplink ports … 12-19
    displaying status … 12-24
    downloading software … 12-30
    features of … 12-7
    general operation … 12-3
    managing … 12-27
    module operation … 12-5
    network address translation … 12-11
    operating rules … 12-14
    overview … 12-5
    resetting to factory defaults … 12-30
    routing support … 12-10
    uplink ports … 12-6
    VLAN base … 12-18
    VLANs … 12-12
ACL
    debug … C-34, C-36
        See also debug command.
    gateway fails … C-11
    troubleshooting … C-8
ACL resources … 14-5
ACM, see Access Controller Module
Actions line … 3-9, 3-10, 3-11
    location on screen … 3-9
address table, port … B-13
address, network manager … 15-4, 15-5
advertise location … 15-48
alert log … 5-20
    alert types … 5-21
    disabling … 5-25
    setting the sensitivity level … 5-24
    sorting the entries … 5-20
arp age, default … 8-7
asterisk … 3-10, 3-13, 6-27
asterisk, in traceroute … C-55
authentication trap … 15-19, 15-22
    See also SNMP.
authentication trap, configuring … 15-22
authorized IP managers
    SNMP, blocking … 15-3
auto MDI/MDI-X configuration, display … 10-16
auto MDI/MDI-X operation … 10-15, 10-16
auto MDI/MDI-X port mode, display … 10-16
auto negotiation … 10-4
Auto-10 … 13-4, 13-7, 13-18
autonegotiate … 15-48

B

bandwidth
    displaying utilization … 5-17
BIOS POST messages … 12-32
boot
    See also reboot.
boot command … 6-4, 6-18
boot ROM console … A-4
boot ROM mode … C-58
boot, from primary flash … 6-19
Bootp … 8-2, 8-12
    Bootp table file … 8-14
    Bootptab file … 8-13
    effect of no reply … C-7
    operation … 8-13
    See also DHCP.
    using with Unix systems … 8-13
Bootp/DHCP differences … 8-13
Bootp/DHCP, LLDP … 15-44
broadcast limit … 10-5, 10-14
broadcast storm … 13-3, C-20

broadcast traffic, IPX … 10-5, 10-14
browser interface
See web browser interface.

C

CDP
configuration, viewing … 15-75
data collection … 15-73
default CDP operation … 15-73
disabled … 15-73
general operation … 15-74
LLDP neighbor data … 15-72
mappings to LLDP data fields … 15-73
neighbor devices … 15-73
on individual ports … 15-77
read-only operation … 15-72, 15-74
Clear + Reset button combination … 6-35
Clear button … 5-10
restoring factory default configuration … C-58
CLI
context level … 10-10
moving to or from the menu … 4-7
client traffic … 12-11
client VLANs … 12-12
command line interface
See CLI.
communities, SNMP … 15-13
viewing and configuring with the CLI … 15-14
viewing and configuring with the menu … 15-13
conceptual view … 12-5
configuration … 3-7
Bootp … 8-13
comparing startup to running … 6-6
console … 7-3
copying … A-23
download … A-4
factory default … 6-9, 8-2
IP … 8-2
network monitoring … B-23
permanent … 6-7
permanent change defined … 6-5
port … 10-1
port trunk group … 13-1
port, duplex … 10-9
port, speed … 10-9
quick … 3-8
reboot to activate … 3-13
restoring factory defaults … C-57
saving from menu interface … 3-10
serial link … 7-3
SNMP … 15-4, 15-5, 15-11
SNMP communities … 15-13, 15-14
startup … 3-10
system … 7-9
Telnet access configuration … 7-3
transferring … A-23
trap receivers … 15-19
viewing … 6-6
web browser access … 7-3
configuration file
browsing for troubleshooting … C-50
multiple
configuration file, multiple
after first E.09.xx reboot … 6-26
applicable software release … 6-22, 6-23
applicable switch models … 6-22
applications … 6-23
asterisk … 6-27
backupConfig … 6-24
change policy … 6-29
Clear + Reset button combination … 6-35
copy from tftp host … 6-37
copy to tftp host … 6-37
create new file … 6-25, 6-32, 6-33
current file in use … 6-27
default reboot from primary … 6-30
effect of E.09.xx download … 6-28
erasing … 6-34
factory default, E.09.xx installed … 6-28
memory assignments … 6-26
memory slot … 6-24, 6-27, 6-30
minconfig … 6-30, 6-34
newconfig … 6-30
oldConfig … 6-26, 6-28
override reboot policy … 6-29
policy, override … 6-31
power cycle … 6-30
pre E.09.xx in one flash … 6-26
primary boot path … 6-27
reboot policy options … 6-24
reboot policy, override … 6-29
reboot process … 6-25
reload … 6-31
rename config file … 6-32
reset … 6-30

running-config file … 6-25
running-config file operation … 6-24
secondary boot path … 6-27
sftp/scp transfer … 6-39
show config file content … 6-29
show multiple files … 6-27
slot 1, use … 6-39
startup-config … 6-24
startup-config file … 6-25
transition to multiple files … 6-26
Unable to copy … 6-32
workingConfig … 6-24, 6-26, 6-28
xmodem from host … 6-38
xmodem to host … 6-38
configuring uplink VLAN … 12-19
console … C-7
configuring … 7-3
ending a session … 3-5
features … 2-3
Main menu … 3-7
navigation … 3-9, 3-10
operation … 3-10
starting a session … 3-4
status and counters access … 3-7
troubleshooting access problems … C-5
context level
global config … 8-10
copy
multiple config file, tftp … 6-37
CPU utilization … B-6

D

date format … C-27
date, configure … 7-13
debug
overview … C-34
session options … C-34
debug command
"debug" severity and Syslog servers … C-38, C-44
configuring messaging … C-40
destinations … C-34, C-38
event … C-36
event log … C-34, C-44
operating notes … C-44
OSPF … C-37
RIP … C-37
session configuration … C-38
show debug … C-40
structure … C-34
syntax … C-36
debug logging, LLDP … 15-30
default gateway … 8-3
default trunk type … 13-10
default VLAN … 12-12
Device Passwords Window … 5-8
DHCP … 8-12
address problems … C-7
effect of no reply … C-7
manual gateway precedence … 8-12
DHCP/Bootp differences … 8-13
DHCP/Bootp process … 8-12
DHCP/Bootp, LLDP … 15-44
diagnostics tools … C-45
browsing the configuration file … C-50
ping and link tests … C-45
display commands
show commands … 12-24
displaying duplex information … 15-64
DNS name … 5-4
Domain Name Server … 5-4
downlink ports … 12-6
download … A-4
See also switch software.
switch-to-switch … A-18
troubleshooting … A-21
Xmodem … A-16
download software … A-18
download, TFTP … A-4, A-5
duplex advertisements … 15-46
duplicate MAC address
See MAC address.
Dyn1
See LACP.

E

edge ports … 14-4
Emergency Location Id Number … 15-57
Emergency Location Identification Number … 15-25
ending a console session … 3-5
event log … 3-7, C-27
navigation … C-29
severity level … C-27
use during troubleshooting … C-27
with debug … C-34, C-44

excessive packets … 14-34

F

factory default configuration
    restoring … 6-9, C-57
failure, switch software download … A-22
fault detection … 5-8
fault detection policy … 5-8, 5-24
fault detection policy, setting … 5-24
fault detection window … 5-24
fault-tolerance … 13-5
filter, source-port … 14-33
firmware version … B-6
flash memory … 3-10, 6-3
flow control
    constraints … 10-5, 10-11
    global … 10-10, 10-11
    global requirement … 10-5, 10-10
    jumbo packets … 14-28, 14-32
    per-port … 10-5, 10-10, 10-11
flow control, effect on rate-limiting … 14-7, 14-18
flow control, status … B-10
flow control, terminal … 7-3
format, date … C-27
format, time … C-27
friendly port names
    See port names, friendly.

G

gateway … 8-3, 8-5, 8-12
    routing fails … C-11
gateway (IP) address … 8-4, 8-6
gateway, manual config priority … 8-12
gateway, on primary VLAN … 8-4
giant packets … 14-34
global config level … 8-10
GMB
    See guaranteed minimum bandwidth.
guaranteed minimum bandwidth
    apportioning unallocated bandwidth … 14-23
    configuration … 14-23
    described … 14-21
    displaying configuration … 14-6
    displaying current configuration … 14-25
    granularity of bandwidth settings … 14-26
    operating notes … 14-26
    operation … 14-21
    outbound queue priority … 14-22
    starving queues … 14-23

H

Help … 3-11, 5-13
Help line, about … 3-9
Help line, location on screens … 3-9
help, online inoperable … 5-13
hop, router … 8-10
HP Auto-MDIX feature … 10-15

I

IEEE 802.1AB/D9 … 15-26
IEEE 802.1d … C-19
IEEE 802.3ab … 10-4
IEEE P802.1AB/D9 … 15-31
IGMP
    host not receiving … C-13
    not working … C-13
    statistics … B-19
inactivity timeout … 7-4
Inbound Telnet Enabled parameter … C-6
Inconsistent value … 15-40
installing … 12-6
invalid input … 4-12
IP … 8-7
    CLI access … 8-6
    configuration … 8-2
    DHCP/Bootp … 8-2
    duplicate address … C-7
    duplicate address, DHCP network … C-7
    effect when address not used … 8-11
    features available with and without … 8-11
    gateway … 8-3
    gateway (IP) address … 8-4
    menu access … 8-5
    multiple addresses in VLAN … 8-3, 8-8
    subnet … 8-3, 8-8
    subnet mask … 8-2, 8-6
    time server address … 9-10, 9-19
    Time-To-Live … 8-7, 8-10
    TTL … 8-7, 8-10
    using for web browser interface … 5-4
    web access … 8-10
IP address

for SNMP management … 15-3
multiple in a VLAN … 8-8
removing or replacing … 8-10
IP preserve
DHCP server … 8-16
overview … 8-15
rules, operating … 8-16
summary of effect … 8-18
IPX
network number … B-7
IPX broadcast traffic … 10-5, 10-14

J

Java … 5-4, 5-5
jumbo packets
configuration … 14-29
excessive inbound … 14-32
flow control … 14-28, 14-32
GVRP operation … 14-28
management VLAN … 14-32
maximum size … 14-27
meshing … 14-28
MTU … 14-27
port adds and moves … 14-28
port speed … 14-28
security concerns … 14-33
standard MTU … 14-27
switch mesh domain … 14-34
through non-jumbo ports … 14-33
traffic sources … 14-28
troubleshooting … 14-34
VLAN tag … 14-27
voice VLAN … 14-32

K

key components … 12-5
kill command … 7-8

L

LACP
802.1x, not allowed … 13-21
active … 13-15
CLI access … 13-11
default port operation … 13-20
described … 13-6, 13-18
Dyn1 … 13-7
dynamic … 13-19
enabling dynamic trunk … 13-15
full-duplex required … 13-4, 13-18
IGMP … 13-23
monitoring static trunk … B-23
no half-duplex … 13-23
operation not allowed … C-13
overview of port mode settings … 13-5
passive … 13-15
removing port from active trunk … 13-16
restrictions … 13-21
standby link … 13-19
status, terms … 13-21
STP … 13-23
trunk limit … 13-19
VLANs … 13-23
with 802.1x … 13-21
with port security … 13-22
learning bridge … 8-2
limit, broadcast … 10-14
link speed, port trunk … 13-3
link test … C-46
for troubleshooting … C-45
link, serial … 7-3
LLDP
802.1D-compliant switch … 15-71
802.1x blocking … 15-32
802.1X effect … 15-71
active port … 15-25
adjacent device … 15-25
advertisement … 15-25
advertisement content … 15-43
advertisement data … 15-62
advertisement, mandatory data … 15-43
advertisement, optional data … 15-44
advertisements, delay interval … 15-39
CDP neighbor data … 15-72
chassis ID … 15-43
chassis type … 15-43
clear statistics counters … 15-68
comparison with CDP data fields … 15-73
configuration options … 15-28
configuring optional data … 15-44
data options … 15-29
data read options … 15-30
data unit … 15-26
debug logging … 15-30
default … 15-73

default configuration … 15-33
DHCP/Bootp operation … 15-32
disable, per-port … 15-42
display neighbor data … 15-65
ELIN … 15-25
enable/disable, global … 15-37
features … 15-24
general operation … 15-27
global counters … 15-68
holdtime multiplier … 15-39
hub, packet-forwarding … 15-28
IEEE 802.1AB/D9 … 15-26
IEEE P802.1AB/D9 … 15-31
Inconsistent value … 15-40
information options … 15-29
invalid frames … 15-69
IP address advertisement … 15-31
IP address subelement … 15-43
IP address, advertisement … 15-71
IP address, DHCP/Bootp … 15-44
IP address, options … 15-43
IP address, version advertised … 15-43
Link-Layer Discovery Protocol … 15-24
LLDP-aware … 15-26
LLDPDU … 15-26
mandatory TLVs … 15-71
MIB … 15-27, 15-31
neighbor … 15-26
neighbor data remaining … 15-71
neighbor data, displaying … 15-65
neighbor statistics … 15-68
neighbor, maximum … 15-70
on 3400/6400cl switches … 15-32
operating rules … 15-31
operation … 15-27
optional data, configuring … 15-45
outbound packet options … 15-29
packet boundaries … 15-27
packet dropped … 15-28
packet time-to-live … 15-30
packet-forwarding … 15-27, 15-71
packets not forwarded … 15-26
per-port counters … 15-69
port description … 15-44
port ID … 15-43
port speed … 15-46
port trunks … 15-31
port type … 15-43
refresh interval … 15-38
reinitialization delay … 15-40
remote management address … 15-30
remote manager address … 15-43
reset counters … 15-68
rxonly … 15-42
setmib, delay interval … 15-39
setmib, reinit delay … 15-41
show advertisement data … 15-62
show commands … 15-34, 15-36
show outbound advertisement … 15-63
SNMP notification … 15-29
SNMP traps … 15-29
spanning-tree blocking … 15-32
standards compatibility … 15-31
statistics … 15-68
statistics, displaying … 15-68
system capabilities … 15-44
system description … 15-44
system name … 15-44
terminology … 15-25
time-to-live … 15-28, 15-38
TLV … 15-27
transmission frequency … 15-28
transmission interval, change … 15-38
transmit and receive … 15-28
transmit/receive modes … 15-28
transmit/receive modes, per-port … 15-42
trap notice interval … 15-42
trap notification … 15-41
trap receiver, data change notice … 15-41
TTL … 15-28, 15-30
txonly … 15-42
VLAN, untagged … 15-71
walkmib … 15-31
LLDPDU … 15-26
LLDP-MED
displaying speed … 15-64
ELIN … 15-57
enable or disable … 15-28
endpoint support … 15-48
fast start control … 15-51
location data … 15-56
medTlvenable … 15-53
Neighbors MIB … 15-65
topology change notification … 15-50
Voice over IP … 15-47
load balancing

See port trunk.
logging, command … C-36
logical port … 13-8
loop, network … 13-3
lost password … 5-10

M

MAC address … 8-13, B-6, D-2
displaying detected devices … D-8
duplicate … C-20, C-25
learned … B-13
per slot … D-5
per-slot or per-port … D-5
port … D-2, D-4
same MAC, multiple VLANs … D-6
switch … D-2
VLAN … D-2, D-5
walkmib … D-5
management
interfaces described … 2-2
server URL … 5-12, 5-13
server URL default … 5-13
management VLAN
See VLAN.
manager access … 15-12
manager password … 5-8, 5-10
Manual, IP address … 8-6
MDI/MDI-X configuration, display … 10-16
MDI/MDI-X operation … 10-15
MDI/MDI-X port mode, display … 10-16
media type, port trunk … 13-3
memory
flash … 3-10, 6-3
startup configuration … 3-10
menu interface
configuration changes, saving … 3-10
moving to or from the CLI … 4-7
mesh
jumbo packets … 14-34
monitoring … B-23
meshed ports, monitoring … B-23
MIB … 15-4
MIB listing … 15-4
MIB, HP proprietary … 15-4
MIB, standard … 15-4
mirroring
See port monitoring.
MLTS … 15-26
monitoring
See port monitoring.
monitoring meshed ports … B-23
monitoring traffic … B-23
monitoring, port … B-23
Multiline Telephone system … 15-26
multinetting … 8-3, 8-8
See also ACLs.
multinetting, limit … 8-8
multiple configuration file
See configuration file, multiple.
multiple forwarding database … B-7, B-16
multiple VLAN … 15-3
multi-port bridge … 8-2

N

NANP … 15-26
navigation, console interface … 3-9, 3-10
navigation, event log … C-29
network management functions … 15-5, 15-13
network manager address … 15-4, 15-5
network monitoring
traffic overload … B-23
Network Monitoring Port screen … B-23
network slow … C-7
North American Numbering Plan … 15-26

O

online help … 5-13
online help location … 5-13
operating system
See switch software.
operation not allowed, LACP … C-13
operator access … 15-12
operator password … 5-8, 5-10
OS
See switch software.
version … A-19
OSPF
debug command … C-37
out-of-band … 2-4

P

password … 5-8, 5-10
creating … 5-8

delete … 3-7, 5-10
if you lose the password … 5-10
lost … 5-10
manager … 5-8
operator … 5-8
set … 3-7
setting … 5-9
using to access browser and console … 5-10
PCM/PCM+
starting web browser … 5-4
PD … 15-26
ping test … C-46
for troubleshooting … C-45
PoE … 15-47
802.3af … 11-6
802.3af standard … 11-4
advertisements … 15-56
cable … 11-4
cabling, Cat-5 … 11-4
configuration … 11-10
configuration planning … 11-19
disabling a port … 11-23
EPS, defined … 11-3
event log messages … 11-23
initial software release … 11-2
insufficient power … 11-6
maximum load calculation … 11-21
messages … 11-23
minimum power requirement … 11-6, 11-7
MPS, defined … 11-3
non-PoE device support … 11-6
oversubscribed … 11-3
PD, defined … 11-3
pin pairs … 11-4
port identifiers … 11-12
power allocation … 11-7
power supplies … 11-2
priority class, defined … 11-3
priority policies … 11-20
priority, port … 11-6, 11-8
PSE, defined … 11-3
related publications … 11-4
RPS, defined … 11-3
security … 11-20
setmib … 11-12
status … 15-52
supported switches … 11-2
terminology … 11-3
threshold, power … 11-5, 11-11
unneeded power … 11-6
viewing status … 11-15
VLAN assignments … 11-19
wire pairs, cable … 11-4
Port
duplex, view … 10-8
speed, view … 10-8
port
address table … B-13
auto negotiation … 10-4
broadcast limit … 10-14
CLI access … 10-8
context level … 10-10
counters … B-10
counters, reset … B-10
fiber-optic … 10-5
MAC address … D-4, D-5
menu access … 10-6
monitoring … B-23
monitoring, static LACP trunk … B-23
monitoring, VLAN … B-23
speed change, transceiver … 10-4
traffic patterns … B-10
trunk
See port trunk.
utilization … 5-17
web browser interface … 5-17
web browser access … 10-18
Port Configuration … 10-1, 13-1
port names, friendly
configuring … 10-19
displaying … 10-21
summary … 10-18
port security
port trunk restriction … 13-3
trunk restriction … 13-8
port trunk … 13-2
See also LACP.
bandwidth capacity … 13-2
caution … 13-3, 13-9, 13-17
CLI access … 13-11
default trunk type … 13-10
enabling dynamic LACP … 13-15
IGMP … 13-8
limit … 13-2
limit, combined … 13-19

link requirements … 13-3
logical port … 13-8
media requirements … 13-7
media type … 13-3
menu access to static trunk … 13-9
monitor port restrictions … 13-8
monitoring … B-23
nonconsecutive ports … 13-2
port security restriction … 13-8
removing port from static trunk … 13-15
requirements … 13-7
SA/DA … 13-25
spanning tree protocol … 13-8
static trunk … 13-7
static trunk, overview … 13-5
static/dynamic limit … 13-19
STP … 13-8
STP operation … 13-7
traffic distribution … 13-7
Trk1 … 13-7
trunk (non-protocol) option … 13-6
trunk option described … 13-24
types … 13-6
VLAN … 13-8
VLAN operation … 13-7
web browser access … 13-17
port trunk group
interface access … 13-1
port, active … 15-25
port-based access control
event log … C-15
LACP not allowed … 13-21
rules of operation … 12-14, 12-31
troubleshooting … C-15
power interruption, effect on event log … C-27
power-over-ethernet
See PoE.
Power-Sourcing Equipment … 15-27
Procurve
support URL … 5-13
prompt, => … C-58
PSAP … 15-27
PSE … 15-27
Public Safety Answering Point … 15-27
public SNMP community … 15-5, 15-13

Q

QoS resources … 14-5
quick configuration … 3-8
quick start … 1-8, 8-3

R

RADIUS, web browser access … 5-8
rate-limiting
caution … 14-4
configuration … 14-5, 14-14
displaying configuration … 14-6, 14-14
edge ports … 14-4
effect of flow control … 14-7, 14-18
effect on port trunks … 14-9
exceeding configured rate … 14-5, 14-9, 14-13, 14-18
intended use … 14-4
note on testing … 14-8, 14-17
operating notes … 14-7, 14-18
operation … 14-5, 14-12
optimum packet size … 14-9, 14-19
per-port only … 14-4
purpose … 14-4
resource consumption … 14-5
security … 14-5, 14-13
traffic filters … 14-9, 14-19
reboot … 3-8, 3-10, 3-12
See also boot.
reboot time … 6-18
reboot, actions causing … 6-4
rebooting the switch
reconfigure … 3-10
reload … 6-4, 6-18, 6-20
remote session, terminate … 7-8
reset … 3-12, 6-11
Reset button … 6-4
restoring factory default configuration … C-58
reset port counters … B-10
resetting the switch
factory default reset … C-57
restricted write access … 15-12
RFC
See MIB.
RFC 1493 … 15-4
RFC 1515 … 15-4
RFC 2922 … 15-31
RFC2737 … 15-31

RFC2863 … 15-31
RIP
debug command … C-37
RIP broadcast traffic, broadcast traffic, RIP … 10-5, 10-14
RMON … 15-4
RMON groups supported … 15-22
router
gateway … 8-6
router, hop … 8-10
routing
gateway fails … C-11
OSPF debug … C-37
RIP debug … C-37
traceroute … C-53
RS-232 … 2-4
running-config, viewing … 6-6
See also configuration.

S

SCP/SFTP
session limit … A-15
secure copy
See SCP/SFTP.
secure FTP
See SCP/SFTP.
security … 5-11, 7-3
username and password … 5-8
web browser access, RADIUS … 5-8
Self Test LED
behavior during factory default reset … C-58
serial number … B-6
setmib … 11-12
setmib, delay interval … 15-39
setmib, reinit delay … 15-41
setting fault detection policy … 5-24
setup screen … 1-8, 8-3
severity code, event log … C-27
sftp/scp, multiple config file … 6-39
show management … 8-7, 9-10, 9-19
show tech … C-50
slow network … C-7
SNMP … 15-3
CLI commands … 15-12
communities … 15-4, 15-5, 15-12, 15-13
Communities screen … 15-11
configure … 15-4, 15-5
IP … 15-3
notification, LLDP
SNMP notification … 15-29
public community … 15-5, 15-13
setmib … 11-12
thresholds … 15-19
traps … 15-4, 15-19
traps, well-known … 15-19
walkmib … D-5, D-6
SNMP communities
configuring with the CLI … 15-14
configuring with the menu … 15-13
SNMP trap, LLDP … 15-41
SNMPv3
"public" community access caution … 15-6
access … 15-5
assigning users to groups … 15-7
communities … 15-11
enable command … 15-7
enabling … 15-6
group access levels … 15-10, 15-11
groups … 15-9
network management problems with snmpv3 only … 15-6
notification … 15-16
restricted-access option … 15-6
set up … 15-5
traps … 15-16
users … 15-5
SNTP
broadcast mode … 9-3, 9-11
broadcast mode, requirement … 9-3
configuration … 9-5
disabling … 9-12
enabling and disabling … 9-10
event log messages … 9-28
manual config priority … 8-12
menu interface operation … 9-28
operating modes … 9-3
poll interval … 9-13
See also TimeP.
selecting … 9-3
show management … 9-10
unicast mode … 9-3, 9-11
unicast time polling … 9-25
unicast, address priority … 9-25
unicast, deleting addresses … 9-27
unicast, replacing servers … 9-27

viewing … 9-5, 9-9
software
See switch software.
software image
See switch software.
software version … B-6
sorting alert log entries … 5-20
source-port filter … 14-33
spanning tree
fast-uplink, troubleshooting … C-20
global information … B-17
information screen … B-17
problems related to … C-20
show tech, copy output … C-51
statistics … B-17
using with port trunking … 13-8
special ports used … 12-7
specific VID … 12-19
SSH
TACACS exclusion … A-14
troubleshooting … C-20
stack management
See stacking.
stacking … 3-5, 3-6, 3-12, 3-14
standard MIB … 15-4
starting a console session … 3-4
startup-config, viewing … 6-6
See also configuration.
statistics … 3-7, B-4
statistics, clear counters … 3-12, 6-11
status and counters
access from console … 3-7
status and counters menu … B-5
status overview screen … 5-6
subnet … 8-3, 8-8
subnet mask … 8-4, 8-6
See also IP.
support
URL … 5-12
URL Window … 5-12
switch console
See console.
switch setup menu … 3-8
switch software
download using TFTP … A-4
download, failure indication … A-22
download, switch-to-switch … A-18
download, troubleshooting … A-21
download, using TFTP … A-4
software image … A-3
version … A-6, A-17
Syslog
configure server IP … C-36
configuring messaging … C-40
facility, user … C-44
logging command … C-36, C-38
operating notes … C-44
operation … C-39
See also debug command.
servers … C-34
severity, "debug" … C-38, C-44
system configuration screen … 7-9
System Name parameter … 7-10

T

TACACS
SSH exclusion … A-14
Telnet … 3-4
terminate session, kill command … 7-8
Telnet, enable/disable … 7-4
Telnet, outbound … 7-6
Telnet, problem … C-6
terminal access, lose connectivity … 7-6
terminal type … 7-3
terminate remote session … 7-8
TFTP
download … A-5
threshold setting … 15-5, 15-13
thresholds, SNMP … 15-19
time format … C-27
time protocol
selecting … 9-3
time server … 8-2
time zone … 7-10, 7-13
time, configure … 7-13
TimeP … 8-3, 8-5
assignment methods … 9-2
disabling … 9-23
enabling and disabling … 9-20
manual config priority … 8-12
poll interval … 9-23
selecting … 9-3
server address listing … 9-10, 9-19
show management … 9-19
viewing and configuring, menu … 9-17

viewing, CLI … 9-19
timesync, disabling … 9-23
Time-To-Live … 8-3, 8-5, 8-6, 8-10
See also TTL.
time-to-live, LLDP … 15-28
Time-To-Live, on primary VLAN … 8-4
TLV … 15-27
TLVs, mandatory … 15-71
top talker … 13-26
traceroute
asterisk … C-55
blocked route … C-56
fails … C-54
traffic monitoring … 15-5, 15-13
traffic, monitoring … B-23
traffic, port … B-10
transceiver, fiber-optic … 10-5
transceiver, speed change … 10-4
trap … 5-25
authentication … 15-19
authentication trap … 15-22
CLI access … 15-19
event levels … 15-21
limit … 15-19
receiver … 15-19
SNMP … 15-19
trap notification … 15-41
trap receiver … 15-4, 15-5
configuring … 15-19, 15-20
troubleshooting
ACL … C-8
approaches … C-4
browsing the configuration file … C-50
console access problems … C-5
diagnosing unusual network activity … C-7
diagnostics tools … C-45
fast-uplink … C-19
ping and link tests … C-45
restoring factory default configuration … C-57
spanning tree … C-19
switch software download … A-21
switch won't reboot, shows => prompt … C-58
unusual network activity … C-7
using the event log … C-27
web browser access problems … C-5
troubleshooting, SSH. … C-20
trunk
See port trunk.
TTL … 8-3, 8-5, 8-6, 8-7
manual config priority … 8-12
on primary VLAN … 8-4
See also Time-To-Live.
TTL, IP … 8-10
TTL, LLDP … 15-28
Type-Length-Value … 15-27
types of alert log entries … 5-21

U

unauthorized access … 15-22
undersize packets … 14-34
Universal Resource Locator
See URL.
Unix, Bootp … 8-13
unrestricted write access … 15-12
unusual network activity … C-7
up time … B-6
URL … 15-4
browser interface online help location … 5-13
management … 5-13
management server … 5-12, 5-13
Procurve … 5-13, 15-4
support … 5-12, 5-13
user name, using for browser or console
access … 5-8, 5-10
users, SNMPv3
See SNMPv3.
using extended CLI … 12-27
using the passwords … 5-10
utilization, port … 5-17

V

version, OS … A-19
version, switch software … A-6, A-17
view
duplex … 10-8
Port speed … 10-8
VLAN … 8-4, C-25
address … 15-3
Bootp … 8-13
configuring Bootp … 8-13
device not seen … C-24
event log entries … C-27
ID … 4-14
link blocked … C-20

MAC address … D-2, D-5
management and jumbo packets … 14-32
management VLAN, SNMP block … 15-3
monitoring … B-3, B-23
multinet … 8-3
multinetting … 8-3, 8-8
multiple … 15-3
multiple IP addresses … 8-3, 8-8
port configuration … C-24
primary … 8-3
reboot required … 3-8
same MAC, multiple VLANs … D-6
subnet … 8-3, 8-8
support enable/disable … 3-8
switch software download … A-4
tagging broadcast, multicast, and unicast traffic … C-24
VLAN ID
See VLAN.
VoIP … 15-47
VT-100 terminal … 7-3

W

walkmib … 15-31, D-5, D-6
warranty … 1-ii
web agent enabled … 5-2
web agent,
advantages … 2-5
web browser access configuration … 7-3
web browser enable/disable … 7-4
web browser interface … 2-5
access parameters … 5-8
alert log … 5-6, 5-20
alert log details … 5-21
bandwidth adjustment … 5-18
bar graph adjustment … 5-18
disable access … 5-2
enabling … 5-4
error packets … 5-17
fault detection policy … 5-8, 5-24
fault detection window … 5-24
features … 2-5
first-time install … 5-7
first-time tasks … 5-7
main screen … 5-16
online help … 5-13
online help location specifying … 5-13
online help, inoperable … 5-13
overview … 5-16
Overview window … 5-16
password lost … 5-10
password, setting … 5-9
port status … 5-19
port utilization … 5-17
port utilization and status displays … 5-17
screen elements … 5-16
security … 5-2, 5-8
standalone … 5-4
status bar … 5-22
status indicators … 5-23
status overview screen … 5-6
system requirements … 5-4
troubleshooting access problems … C-5
URL default … 5-13
URL, management server … 5-14
URL, support … 5-14
web site, HP … 15-4
world wide web site, ProCurve
See Procurve.
write access … 15-12
write memory, effect on menu interface … 3-13

X

Xmodem OS download … A-16

—This page is intentionally unused—

ProCurve Networking
HP Innovation

Technical information in this document
is subject to change without notice.

© Copyright 2006
Hewlett-Packard Development Company, L.P.
Reproduction, adaptation, or translation
without prior written permission is prohibited
except as allowed under the copyright laws.

October 2006

Manual Part Number
5990-6050

AP-6P-ST

ITEM NO.	QTY.	PART NO.	DESCRIPTION
1	1	10-5448	MULTIPLATE BK 6 ST SIMPLEX
2	2	99933	LATCH, BLACK, FEMALE END GROMMET
3	2	99934	LATCH, BLACK, MALE END PLUNGER
4	1	44759	#287-1 POLY BAG, 2.5 X 7 LIGHT, ON A ROLL

REV	ECN#	DESCRIPTION OF CHANGE	DATE	BY	MFG ENG
1A	N/A	PRELIMINARY RELEASE			
01	440	INITIAL RELEASE	10/27/03	L.P.K	
02	943	0.318 X 0.388 DD WAS 0.312 X 0.380	10/10/06	SK	
03	1395	ADD ITEM #4	06/02/08	SAB	

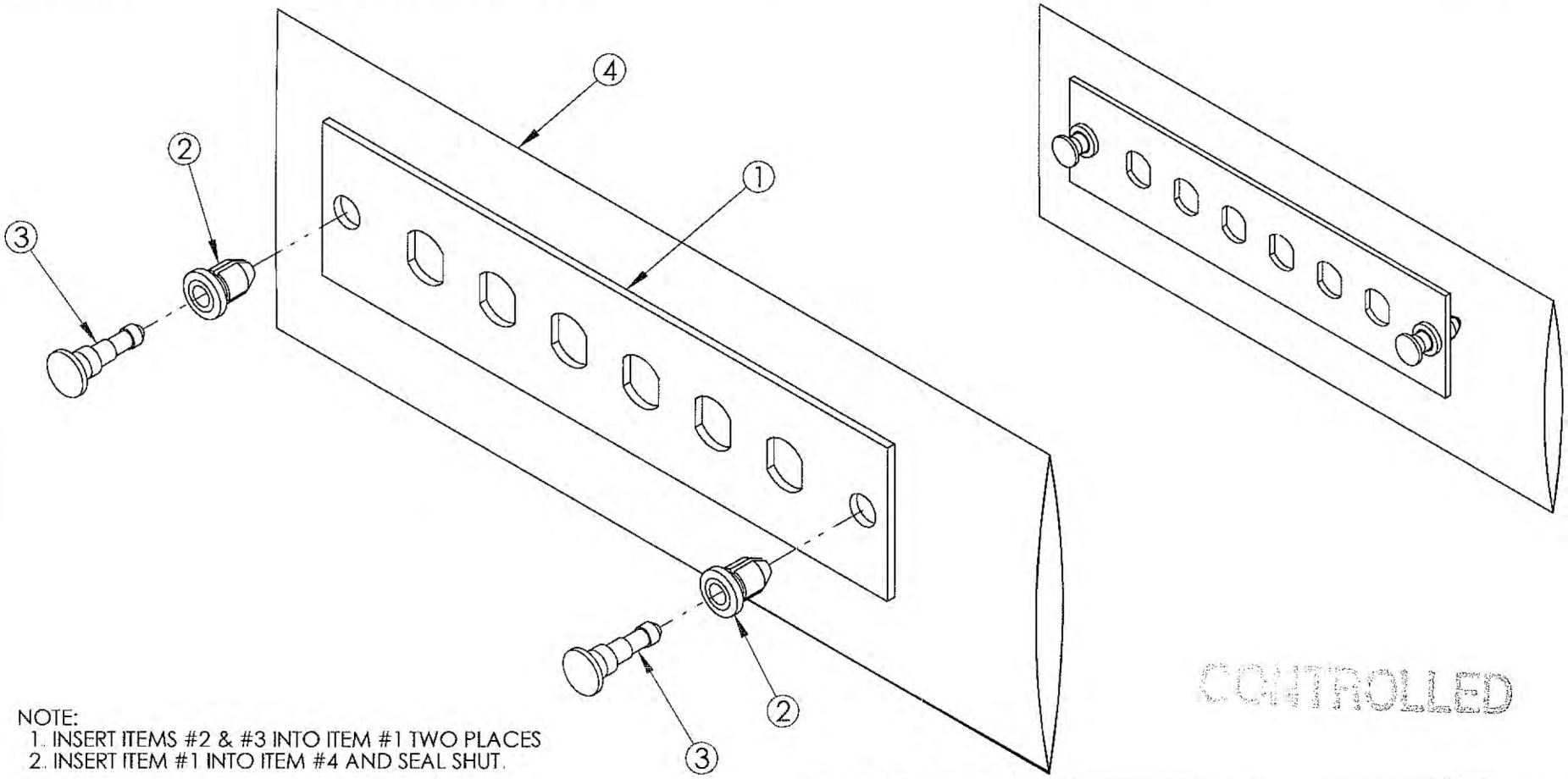

NOTE:
1. INSERT ITEMS #2 & #3 INTO ITEM #1 TWO PLACES
2. INSERT ITEM #1 INTO ITEM #4 AND SEAL SHUT.

CONTROLLED

ITEM 701

UNLESS OTHERWISE SPECIFIED
DIMENSIONS ARE IN INCHES
TOLERANCES ARE:
FRACTIONS ±1/32 DECIMALS .XX=±.03 .XXX=±.010 ANGLES ±1"
ALL FLATS TO BE ±.005

NO SHARP EDGES OR BURRS ALLOWED

MATERIAL: SEE B.O.M.
FINISH: BLACK TEXTURED
DO NOT SCALE DRAWING

DRAWN BY: L.P.K. DATE: 10/27/2003
CHECKED: DATE:
MFG ENG: DATE:
QUALITY ENG: DATE:

LIGHTWAVE
LightWave Manufacturing & Services LLC
2111-B Spencer Road | Richmond, VA 23230 | (804) 672-8426
www.lightwavecable.com

MSTA-03-BB EMPTY
ST 6 PACK PANEL
BLK W/NYLATCHES

SIZE A DWG NO AP-6P-ST REV. 03
SCALE: 1:1 CAD FILE: SHEET 1 OF 1

ITEM 200

FREE-STAND, SINGLE OR DUAL ACCESS, TYPE 12

INDUSTRY STANDARDS

UL 508A Listed; Type 12; File No. E61997
cUL Listed per CSA C22.2 No. 94; Type 12; File No. E61997

NEMA/EEMAC Type 12
E.I.A. RS310D
CSA, File No. 42186, Type 12
IEC 60529, IP55

APPLICATION

Available with front or front and rear access, these Type 12 enclosures have sturdy unibody construction and flexible internal mounting options.

SPECIFICATIONS

- 12 gauge steel
- Seams continuously welded and ground smooth; no holes or knockouts
- Stiffeners on back of two-door enclosures maintain flatness and increase rigidity
- Lifting eyes for easy handling
- 3-point latches operated by oil-tight key-locking handle
- Latch rod rollers for easy door closing
- Concealed, easy-to-remove hinges
- Data pockets are high-impact thermoplastic
- Internal mounting channels welded horizontally to sides at top, bottom and center
- Optional panels and rack mount angles can be mounted anywhere along channels
- Oil-resistant door gasket
- Bonding provision on door
- Provision for mounting fluorescent light

FINISH

Two finishes available: ANSI 61 gray, polyester powder paint outside and inside; or ANSI 61 gray outside and white, polyester powder paint inside. Optional panels available with a white or conductive finish.

ACCESSORIES

See also Accessories.
Plate Casters
Electric Heater
Door Stop Kit
Compact Cooling Fans
PANELITE™ Enclosure Lights Overview

MODIFICATION AND CUSTOMIZATION

Hoffman excels at modifying and customizing products to your specifications. Contact your local Hoffman sales office or distributor for complete information.

BULLETIN: A30

Standard Product **One-Door Single-Access**

Catalog Number	AxBxC in.	AxBxC mm	Interior Finish	F (in.)	F (mm)	G (in.)	G (mm)	Number of Lifting Eyes	Number of Rack Units
A602418FSG	60.06 x 24.06 x 18.06	1526 x 611 x 459	Gray	32.03	814	23.12	587	2	28
A602418FS	60.06 x 24.06 x 18.06	1526 x 611 x 459	White	32.03	814	23.12	587	2	28
A722418FSG	72.06 x 24.06 x 18.06	1830 x 611 x 459	Gray	38.03	966	29.12	740	2	35
A722418FS	72.06 x 24.06 x 18.06	1830 x 611 x 459	White	38.03	966	29.12	740	2	35
A723018FSG	72.06 x 30.06 x 18.06	1830 x 764 x 459	Gray	38.03	966	29.12	740	2	35
A723018FS	72.06 x 30.06 x 18.06	1830 x 764 x 459	White	38.03	966	29.12	740	2	35
A723618FSG	72.06 x 36.06 x 18.06	1830 x 916 x 459	Gray	38.03	966	29.12	740	2	35
A723618FS	72.06 x 36.06 x 18.06	1830 x 916 x 459	White	38.03	966	29.12	740	2	35
A902420FSG	90.06 x 24.06 x 20.06	2288 x 611 x 510	Gray	47.03	1195	38.12	968	2	45
A902420FS	90.06 x 24.06 x 20.06	2288 x 611 x 510	White	47.03	1195	38.12	968	2	45
A903620FSG	90.06 x 36.06 x 20.06	2288 x 916 x 510	Gray	47.03	1195	38.12	968	2	45
A903620FS	90.06 x 36.06 x 20.06	2288 x 916 x 510	White	47.03	1195	38.12	968	2	45
A603624FSG	60.06 x 36.06 x 24.06	1526 x 916 x 611	Gray	32.03	814	23.12	587	2	28
A603624FS	60.06 x 36.06 x 24.06	1526 x 916 x 611	White	32.03	814	23.12	587	2	28
A722424FSG	72.06 x 24.06 x 24.06	1830 x 611 x 611	Gray	38.03	966	29.12	740	2	35
A722424FS	72.06 x 24.06 x 24.06	1830 x 611 x 611	White	38.03	966	29.12	740	2	35
A723024FSG	72.06 x 30.06 x 24.06	1830 x 764 x 611	Gray	38.03	966	29.12	740	2	35
A723024FS	72.06 x 30.06 x 24.06	1830 x 764 x 611	White	38.03	966	29.12	740	2	35
A723624FSG	72.06 x 36.06 x 24.06	1830 x 916 x 611	Gray	38.03	966	29.12	740	2	35
A723624FS	72.06 x 36.06 x 24.06	1830 x 916 x 611	White	38.03	966	29.12	740	2	35
A903624FSG	90.06 x 36.06 x 24.06	2288 x 916 x 611	Gray	47.03	1195	38.12	968	2	45
A903624FS	90.06 x 36.06 x 24.06	2288 x 916 x 611	White	47.03	1195	38.12	968	2	45
A723630FSG	72.06 x 36.06 x 30.06	1830 x 916 x 764	Gray	38.03	966	29.12	740	4	35
A723630FS	72.06 x 36.06 x 30.06	1830 x 916 x 764	White	38.03	966	29.12	740	4	35
A723636FSG	72.06 x 36.06 x 36.06	1830 x 916 x 916	Gray	38.03	966	29.12	740	4	35
A723636FS	72.06 x 36.06 x 36.06	1830 x 916 x 916	White	38.03	966	29.12	740	4	35
A903636FSG	90.06 x 36.06 x 36.06	2288 x 916 x 916	Gray	47.03	1195	38.12	968	4	45
A903636FS	90.06 x 36.06 x 36.06	2288 x 916 x 916	White	47.03	1195	38.12	968	4	45

Four lifting eyes are furnished if C = 30.06 (764mm) or more.

Removable 12.00 x 12.00 (305mm x 305mm) data pocket included.

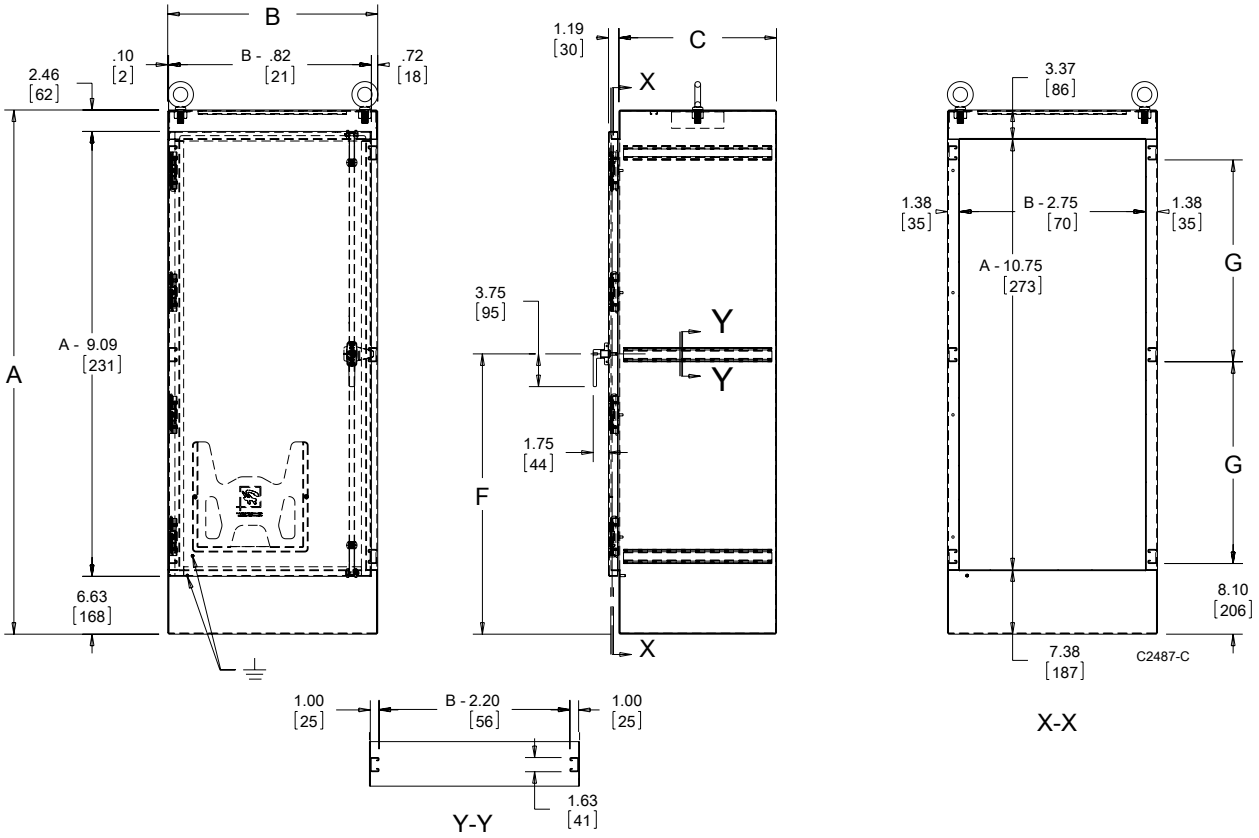

Hoffman™

Large Enclosure Safe Handling Requirements

Do not reposition until permanently installed.

⚠ WARNING

Tipover hazard. Enclosure can crush you resulting in serious injury or death.

- **Read and follow precautions in the Large Enclosure Safe Handling Requirements that accompanied the enclosure. It is also available at: hoffmanonline.com/safehandling**
- **Do not transport using pallet end slots. These slots are only for trailer loading and unloading.**
- **Stabilize the enclosure before removing strapping.**
- **This Warning and Safe Handling Requirements manual may be repositioned only after the enclosure has been permanently installed.**

Pentair
Technical Products

© 2010-2012 Pentair Technical Products
P/N 35320001 87567824

IMPORTANT NOTICE

Pentair Technical Products provides this information to assist in the handling of its large enclosure products. The following procedures apply only to enclosures in their original packaging without electrical components and are provided to help avoid equipment damage, personal injury, or possible death during handling and installation of large top-heavy enclosures. The user should comply with all recommendations of the manufacturer for the material handling equipment being used. If you have questions about how to safely handle any of our products, please call 1-763-422-2211.

WARNING	**To minimize the risk of serious injury, death, or structural damage to the enclosure, never attempt to lift or move the enclosure by any means other than the methods shown in this manual.**

GENERAL SAFE HANDLING REQUIREMENTS

1. Before moving the enclosure, make sure that the route is clear of all obstructions, and workers are at a distance that is more than the overall height of the enclosure.
2. The enclosures must be handled by a trained and authorized forklift operator only. This is required by OSHA Standard 1910.178 and ANSI Standard B56.1.
3. Know the safe lifting capabilities of the lifting equipment; be certain it can handle the weight and size of the enclosure. Refer to the product label and the name plate data on the fork lift for this information.
4. When moving the enclosure, avoid contacting fixed objects. If you do, the enclosure could be pulled from the forks. Position enclosures far back on the forks to avoid the bottom load from being pulled from forks if it should catch on or strike a fixed object.
5. Carefully position the enclosures on the forks, noting that enclosures are top heavy. Keep load against the carriage. Always tilt the load backwards towards the fork's mast.
6. When using a forklift, secure enclosure to forklift mast before attempting to move the unit (see Figure No 2).
7. Start and stop the forklift slowly and gradually; avoid jerking movements. When traveling with the load, drive slowly with the forks carried as low to the ground as possible, consistent with safe operation.
8. A person should assist the forklift operator at a safe distance, i.e. more than the height of the enclosure, in guiding or directing movement of large top heavy enclosures.

 © 2010-2012 Pentair Technical Products

Handling one- and two-door enclosures using a standard forklift with an overhead clamping device

See Figure No. 1 and follow procedures listed below.

1. Spread the forks to maximum distance or as dictated by the skid width.
2. Enter the skid from the rear (Side A) of the enclosure. Carefully position the enclosure on the forks with the load against the carriage/mast to avoid the bottom of the load from being pulled away from the forks should it catch on or strike a fixed object. Avoid contacting fixed objects while transporting. If you do, properly reposition the enclosure on the forks before transporting.
3. Apply maximum clamping pressure that will not damage the enclosure.
4. Check the load to make sure it is secure.
5. Lift the enclosure a minimum distance so the skid is just clear of the floor.
6. Never attempt to move more than one enclosure at a time; capacity of the lift truck may be exceeded.

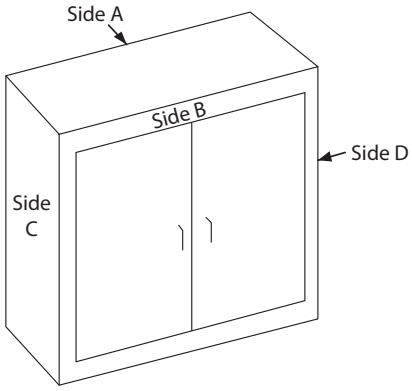

Figure No. 1

Handling single- and two-door enclosures

See Figure No. 2 and follow procedures below

1. Spread forks to the maximum distance or as dictated by the skid width.
2. Enter the skid from the rear (Side A) of the enclosure. Carefully position the enclosure on the forks with the load against the carriage/mast to avoid the bottom of the load from being pulled away from the forks should it catch on or strike a fixed object. Avoid contacting fixed objects while transporting. If you do, properly reposition the enclosure on the forks before transporting.

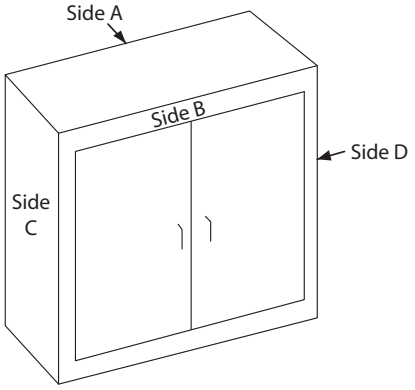

3. Before lifting with forklift, secure the enclosure by inserting a 3000 lb.-rated chain or strap through the eye bolts provided on top of the enclosure and securely fasten to the forklift mast assembly. Sufficient tension should be placed on the chain or strap to prevent the top-heavy enclosure from tipping during transportation.
4. Lift the enclosure a minimum distance so the skit is just clear of the floor.
5. Never attempt to move more than one enclosure at a time; capacity of the lift truck may be exceeded.

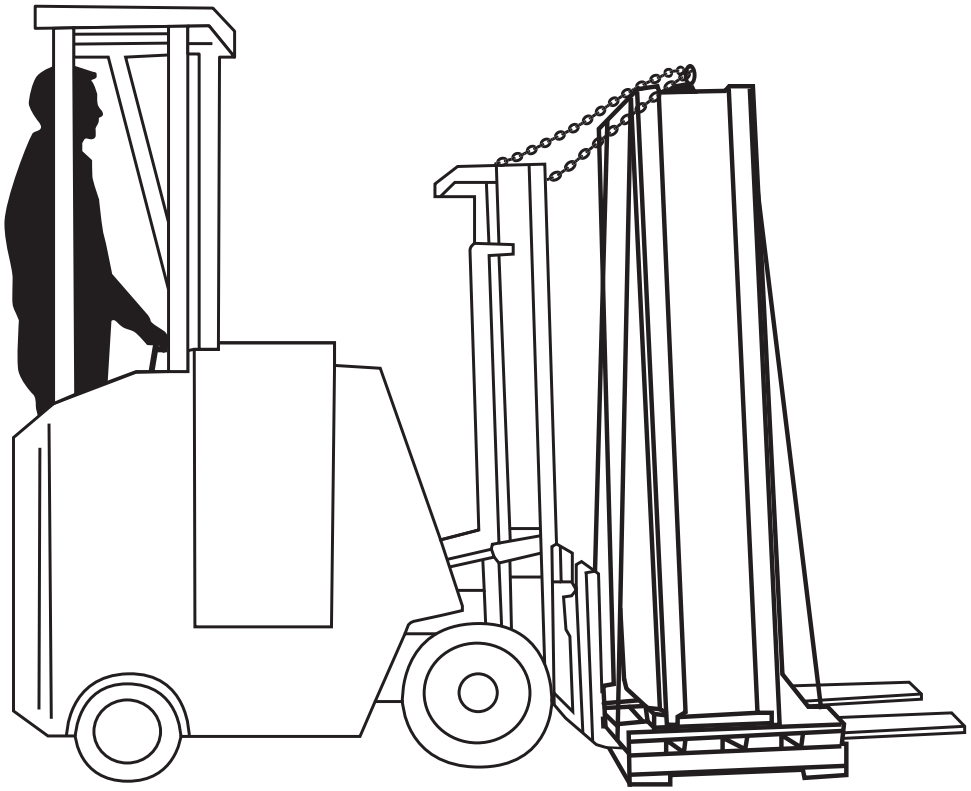

Figure No. 2

End loading two-door enclosures on and off trailer

See Figure No. 3 and follow procedures listed below.

NOTE: Preferred handling method is from side A. If side A is not accessible, use the following procedures for loading and unloading from sides C and D. DO NOT TRANSPORT enclosures from side B, C or D. Enclosure must be handled from side A as soon as it is accessible.

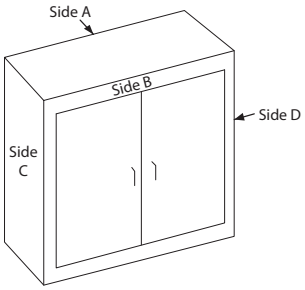

1. Spread forks to match the pallet end slot openings. Enter the pallet from the narrow side C or D.

WARNING	**Always use both forks. Do not attempt to load or unload enclosures on one fork. If one fork is used, the capacity of the lift truck may be exceeded and the load will not be centered properly possibly causing it to tipover.**

2. Carefully position the enclosure on the forks with the load against the carriage/mast to avoid the bottom of the load from being pulled away from the forks should it catch on or strike a fixed object. Avoid contacting fixed objects while transporting.
3. To load or unload, secure enclosures on the mast of the forklift. To accomplish this, insert a 3000 lb-rated chain or strap through the eyebolts provided on the top of the enclosure and securely fasten to the fork lift mast assembly. Sufficient tension should be placed on the chain or strap to prevent top-heavy enclosures from tipping.

WARNING	**Do not use chains or straps to lift enclosure as the capacity of the forklift may be exceeded due to a change of load centers. The chains/straps are only to be used to help prevent unit from tipping.**

4. To load or unload the enclosure, tilt the mast a sufficient amount to take the weight off the opposite end of the enclosure and slide or push the enclosure as required.
5. Transportation after off loading from trailer must be done from side A. See Handling one- and two-door enclosures using a standard forklift with an overhead clamping device on page 3.

Figure No. 3

© 2010-2012 Pentair Technical Products

Handling three-, four-, five-, and six-door enclosures with a standard forklift and ROLL•A•LIFT™ [1]

See Figure No. 4 and follow the procedures outlined below.

1. Enter the skid from the narrow side C or D of the enclosure. Forks should be spaced just wide enough to enter the skid. Do not place the forks completely together. Carefully position the enclosure on the forks with the load against the carriage/mast to avoid the bottom of the load from being pulled away from the forks should it catch on or strike a fixed object. Avoid contacting fixed objects while transporting.
2. Secure the enclosure to the mast of the forklift. To accomplish this, insert a 3000 lb.-rated chain or strap through the eye bolts provided on top of the enclosure and securely fasten it to the forklift mast assembly. Sufficient tension should be placed on the chain or strap to prevent the top-heavy enclosure from tipping during transportation.

WARNING	**Do not use chains or straps to lift enclosure as the capacity of the forklift may be exceeded due to a change of load centers. The chains or straps are only to be used to help prevent unit from tipping.**

3. On opposite end of the enclosure, place a ROLL•A•LIFT™ or similar device under the enclosure. Lift this end a minimum distance to ensure skid is clear of floor surface. Secure ROLL•A•LIFT™ to the enclosure using eye bolts provided.
4. With the forklift, lift the end of the enclosure a sufficient distance so the skid is clear of the floor. Re-check the tension on the chain or strap to ensure the enclosure is secure.

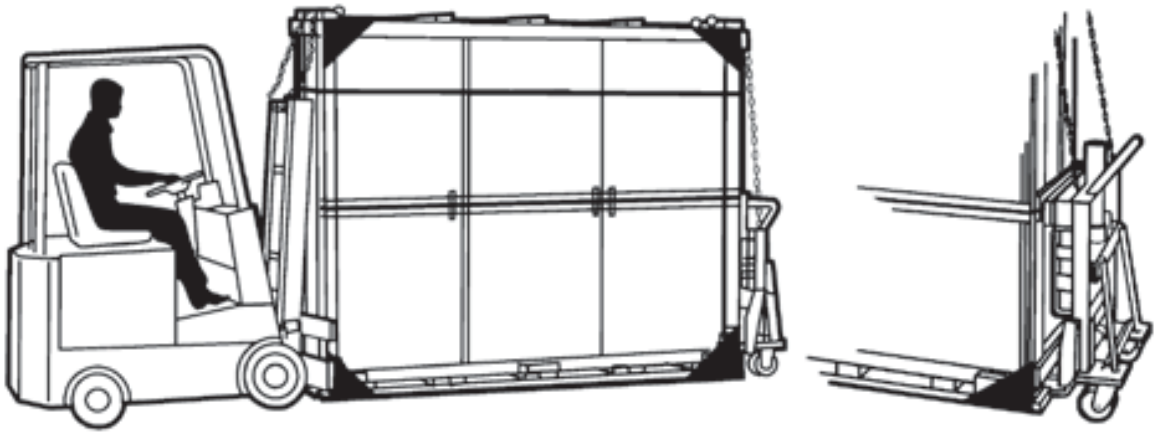

Figure No. 4

WARNING	**Only use Roll-A-Lift™ made by Starnes Inc. or a similar device at one end with a forklift at the opposite end. The enclosure could easily tip over if a forklift with securing mechanism (chains, clamp, etc.) is not used.**

1 ROLL•A•LIFT™ is a trademark of Starnes, Inc.

© 2010-2012 Pentair Technical Products

Handling three-, four-, five-, and six-door enclosures with a standard forklift and overhead clamping device

See Figure No. 5 and follow the procedures outlined below

1. Enter the skid from the narrow side C or D of the enclosure. Forks should be spaced just wide enough to enter skid. Do not place forks completely together.

WARNING	**Always use both forks. Do not attempt to load or unload enclosures on one fork. If one fork is used, the capacity of the lift truck may be exceeded and the load will not be centered properly possibly causing a tipover.**

2. Carefully position the enclosure on the forks with the load against the carriage/mast to avoid the bottom of the load from being pulled away from the forks should it catch on or strike a fixed object. Avoid contacting fixed objects while transporting.

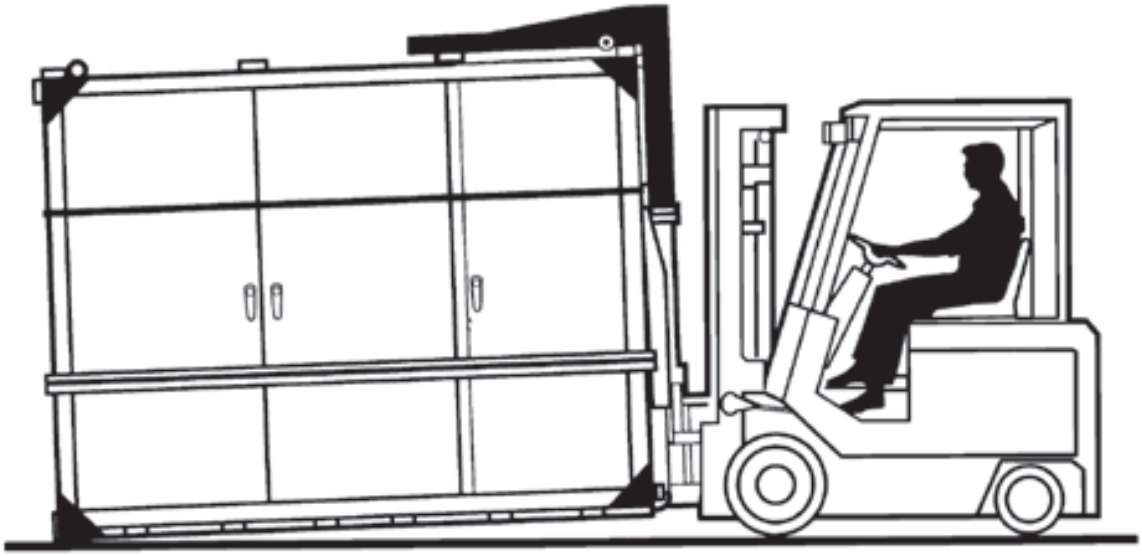

Figure No. 5

3. Check load to make sure it is secure.
4. Tilt mast a sufficient amount from the forklift side to take the weight off the opposite end of the enclosure and slide/push enclosure as required.

WARNING	**Do not attempt to lift such an enclosure completely off the ground. The capacity of lift truck may be exceeded and result in a tipover.**

 © 2010-2012 Pentair Technical Products

Overhead lifting

(Recommended for enclosures provided with eye bolts)

See Figure No. 6 and follow procedures as listed below.

1. Attach rigging to eye bolts always maintaining the 45° maximum angle illustrated in Figure No. 6. When lifting three-, four-, and five-door enclosures, four eye bolts must be used.

WARNING	**Ensure that the load rating of the lifting device and rigging is sufficient to safely handle any of these loads.**

2. Do not use ropes or cables through the eye bolts as sharp angles may cause excessive wear and possible failure. Only use slings with adequate load-rated hooks or shackles.
3. Select or adjust the rigging lengths to compensate for any unequal weight distribution of the load and to support the enclosure in an upright position.
4. To reduce tension on the rigging and compression on the enclosure, do not allow the angle between the lifting cables and the vertical to exceed 45 degrees, see Figure No. 6.

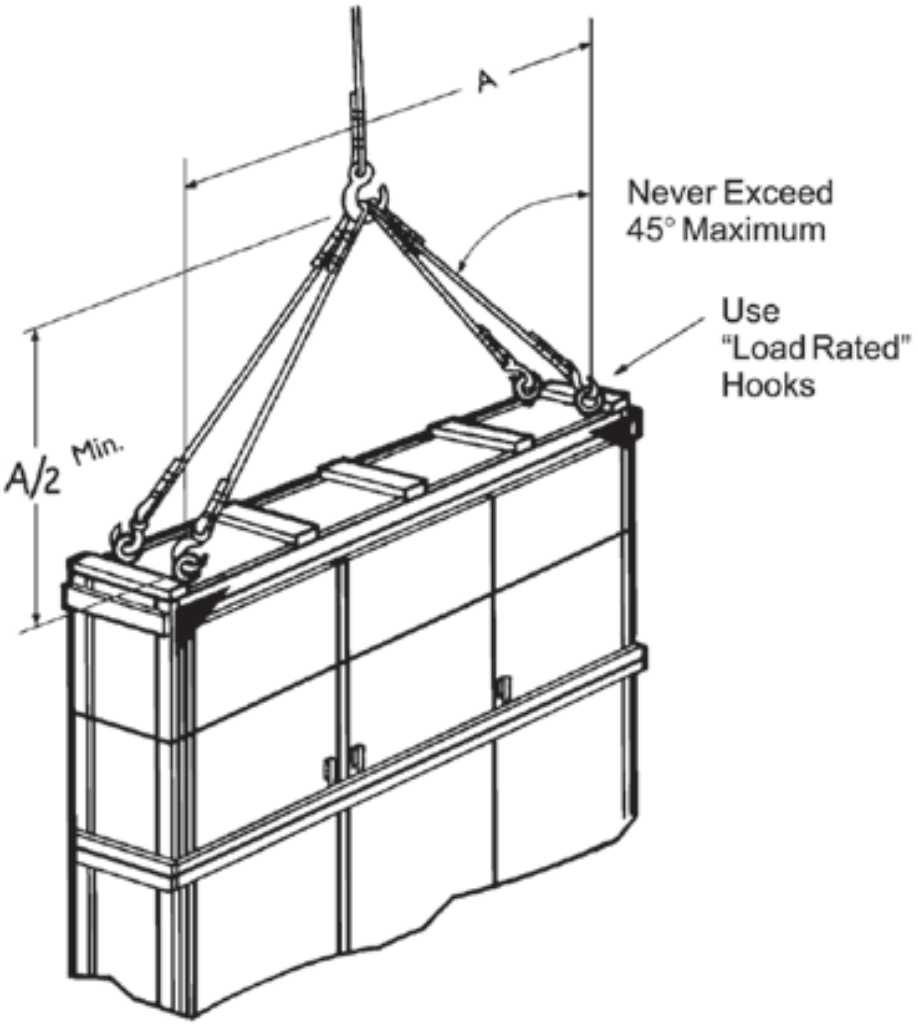

Figure No. 6

Panels for Enclosures

Panels for Junction Boxes

ITEM 201

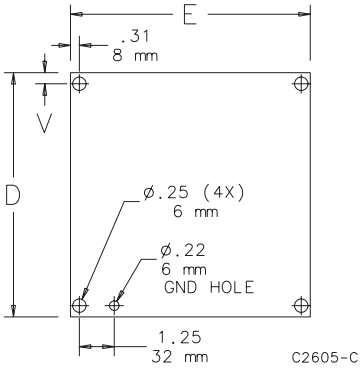

Steel panels are 14 gauge, finished with white polyester powder paint or with a conductive, corrosion-resistant coating. Stainless steel panels are 14 gauge Type 304 and have a commercial #2B finish which is protected on one side with a plastic film. Aluminum panels are 5052-H32 aluminum alloy 0.080-in. (2-mm) thick and protected on one side with a plastic film. Panel mounting hardware is furnished with all enclosures which accept these panels.

Bulletin: PNLJ, PNLWM

Catalog Number	Material	Panel Size D x E (in.)	Panel Size D x E (mm)	V (in.)	V (mm)
A6P4	Painted steel	4.88 x 2.88	124 x 73	0.31	8
A6P4G	Conductive steel	4.88 x 2.88	124 x 73	0.31	8
A6P4SS	Stainless Steel	4.88 x 2.88	124 x 73	0.31	8
A6P4AL	Aluminum	4.88 x 2.88	124 x 73	0.31	8
A6P6	Painted steel	4.88 x 4.88	124 x 124	0.31	8
A6P6G	Conductive steel	4.88 x 4.88	124 x 124	0.31	8
A6P6SS	Stainless Steel	4.88 x 4.88	124 x 124	0.31	8
A6P6AL	Aluminum	4.88 x 4.88	124 x 124	0.31	8
A8P6	Painted steel	6.75 x 4.88	171 x 124	0.25	6
A8P6G	Conductive steel	6.75 x 4.88	171 x 124	0.25	6
A8P6SS	Stainless Steel	6.75 x 4.88	171 x 124	0.25	6
A8P6AL	Aluminum	6.75 x 4.88	171 x 124	0.25	6
A8P8	Painted steel	6.75 x 6.88	171 x 175	0.25	6
A8P8AL	Aluminum	6.75 x 6.88	171 x 175	0.25	6
A10P8	Painted steel	8.75 x 6.88	222 x 175	0.25	6
A10P8G	Conductive steel	8.75 x 6.88	222 x 175	0.25	6
A10P8SS	Stainless Steel	8.75 x 6.88	222 x 175	0.25	6
A10P8AL	Aluminum	8.75 x 6.88	222 x 175	0.25	6
A10P10	Painted steel	8.75 x 8.88	222 x 226	0.25	6
A10P10G	Conductive steel	8.75 x 8.88	222 x 226	0.25	6
A10P10AL	Aluminum	8.75 x 8.88	222 x 226	0.25	6
A12P6	Painted steel	10.75 x 4.88	273 x 124	0.25	6
A12P6G	Conductive steel	10.75 x 4.88	273 x 124	0.25	6
A12P10	Painted steel	10.75 x 8.88	273 x 226	0.25	6
A12P10G	Conductive steel	10.75 x 8.88	273 x 226	0.25	6
A12P10SS	Stainless Steel	10.75 x 8.88	273 x 226	0.25	6
A12P10AL	Aluminum	10.75 x 8.88	273 x 226	0.25	6
A12P12	Painted steel	10.75 x 10.88	273 x 276	0.25	6
A12P12G	Conductive steel	10.75 x 10.88	273 x 276	0.25	6
A12P12SS	Stainless Steel	10.75 x 10.88	273 x 276	0.25	6
A14P8	Painted steel	12.75 x 6.88	324 x 175	0.25	6
A14P8G	Conductive steel	12.75 x 6.88	324 x 175	0.25	6
A14P12	Painted steel	12.75 x 10.88	324 x 276	0.25	6
A14P12G	Conductive steel	12.75 x 10.88	324 x 276	0.25	6
A14P12SS	Stainless Steel	12.75 x 10.88	324 x 276	0.25	6
A14P12AL	Aluminum	12.75 x 10.88	324 x 276	0.25	6
A16P10	Painted steel	14.75 x 8.88	375 x 226	0.25	6
A16P10G	Conductive steel	14.75 x 8.88	375 x 226	0.25	6
A16P14	Painted steel	14.75 x 12.88	375 x 327	0.25	6
A16P14G	Conductive steel	14.75 x 12.88	375 x 327	0.25	6
A16P14SS	Stainless Steel	14.75 x 12.88	375 x 327	0.25	6
A16P14AL	Aluminum	14.75 x 12.88	375 x 327	0.25	6
A18P16	Painted steel	16.75 x 14.88	425 x 378	0.25	6
A18P16G	Conductive steel	16.75 x 14.88	425 x 378	0.25	6
A18P16SS	Stainless Steel	16.75 x 14.88	425 x 378	0.25	6
A18P16AL	Aluminum	16.75 x 14.88	425 x 378	0.25	6

© 2011 Pentair Technical Products

Panels for Enclosures

Catalog Number	Material	Panel Size D x E (in.)	Panel Size D x E (mm)	Panel Gauge or Thickness	Edge Flanges	T (in.)	T (mm)	Number of Holes
A42P42G	Conductive steel	39.00 x 39.00	991 x 991	12 ga.	4	0.75	19	8
A48P24	Painted steel	45.00 x 21.00	1143 x 533	12 ga.	2	0.75	19	6
A48P24G	Conductive steel	45.00 x 21.00	1143 x 533	12 ga.	2	0.75	19	6
A48P30	Painted steel	45.00 x 27.00	1143 x 686	12 ga.	4	0.75	19	6
A48P30G	Conductive steel	45.00 x 27.00	1143 x 686	12 ga.	4	0.75	19	6
A48P36	Painted steel	45.00 x 33.00	1143 x 838	12 ga.	4	0.75	19	8
A48P36G	Conductive steel	45.00 x 33.00	1143 x 838	12 ga.	4	0.75	19	8
A48P36SS6	Stainless Steel	45.00 x 33.00	1143 x 838	12 ga.	4	0.75	19	8
A48P36AL	Aluminum	45.00 x 33.00	1143 x 838	0.10 in./3 mm	4	0.75	19	8
A48P42	Painted steel	45.00 x 39.00	1143 x 991	12 ga.	4	0.75	19	8
A48P42G	Conductive steel	45.00 x 39.00	1143 x 991	12 ga.	4	0.75	19	8
A48P48	Painted steel	44.00 x 44.00	1118 x 1118	10 ga.	4	0.88	22	8
A48P48G	Conductive steel	44.00 x 44.00	1118 x 1118	10 ga.	4	0.88	22	8
A54P42	Painted steel	50.00 x 38.00	1270 x 965	12 ga.	4	0.75	19	8
A54P42G	Conductive steel	50.00 x 38.00	1270 x 965	10 ga.	4	0.75	19	8
A60P24	Painted steel	57.00 x 21.00	1448 x 533	12 ga.	4	0.75	19	6
A60P24G	Conductive steel	57.00 x 21.00	1448 x 533	12 ga.	4	0.75	19	6
A60P30	Painted steel	57.00 x 27.00	1448 x 686	12 ga.	4	0.75	19	6
A60P30G	Conductive steel	57.00 x 27.00	1448 x 686	12 ga.	4	0.75	19	6
A60P36	Painted steel	57.00 x 33.00	1448 x 838	12 ga.	4	0.75	19	8
A60P36G	Conductive steel	57.00 x 33.00	1448 x 838	12 ga.	4	0.75	19	8
A60P36SS6	Stainless Steel	57.00 x 33.00	1448 x 838	12 ga.	4	0.75	19	8
A60P36AL	Aluminum	57.00 x 33.00	1448 x 838	0.10 in./3 mm	4	0.75	19	8
A60BFP42	Painted steel	56.00 x 38.00	1422 x 965	10 ga.	4	0.88	22	10
A60BFP42G	Conductive steel	56.00 x 38.00	1422 x 965	10 ga.	4	0.88	22	10
A60P48	Painted steel	56.00 x 44.00	1422 x 1118	10 ga.	4	0.88	22	12
A60P48G	Conductive steel	56.00 x 44.00	1422 x 1118	10 ga.	4	0.88	22	12
A60P60	Painted steel	56.00 x 56.00	1422 x 1422	10 ga.	4	0.88	22	10
A60P60G	Conductive steel	56.00 x 56.00	1422 x 1422	10 ga.	4	0.88	22	10
A72P36	Painted steel	69.00 x 33.00	1753 x 838	12 ga.	4	0.75	19	8
A72P36G	Conductive steel	69.00 x 33.00	1753 x 838	12 ga.	4	0.75	19	8
A72P60	Painted steel	68.00 x 56.00	1727 x 1422	10 ga.	4	0.88	22	12
A72P60G	Conductive steel	68.00 x 56.00	1727 x 1422	10 ga.	4	0.88	22	12
A72P72	Painted steel	68.00 x 68.00	1727 x 1727	10 ga.	4	0.88	22	10
A72P72G	Conductive steel	68.00 x 68.00	1727 x 1727	10 ga.	4	0.88	22	10

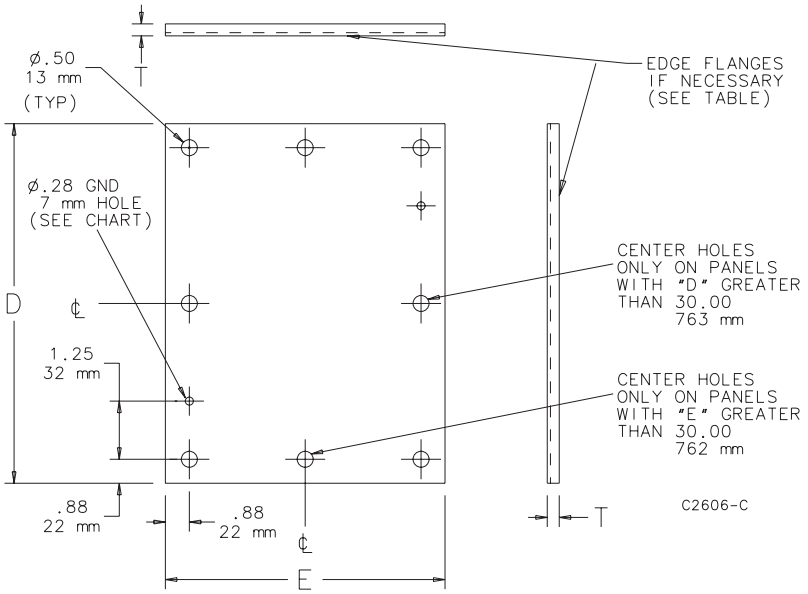

© 2011 Pentair Technical Products

Pfannenberg Filterfan 4th Generation

ITEMS 210, 211

- (D) **Montage- und Betriebsanleitung**
- (GB) **Installation- and operating instructions**
- (F) **Notice de montage et d´utilisation**
- (NL) **Montage- en gebruikshandleiding**
- (S) **Installations och bruksanvisning**
- (I) **Istruzioni di montaggio e per l´uso**
- (E) **Instrucciones de montaje y para uso**
- (RUS) **Инструкция по установке и эксплуатации**

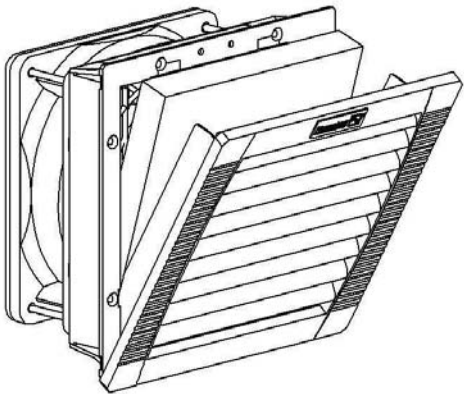

IP54/ TYPE 12 PF/ PF EMC

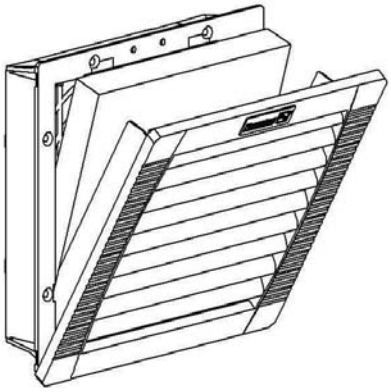

IP54/ TYPE 12 PFA/ PFA EMC

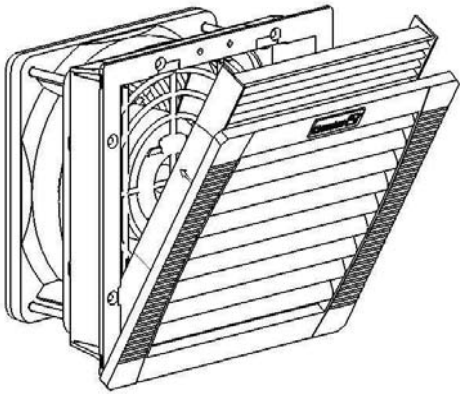

IP55/ TYPE 12 PF/ PF EMC

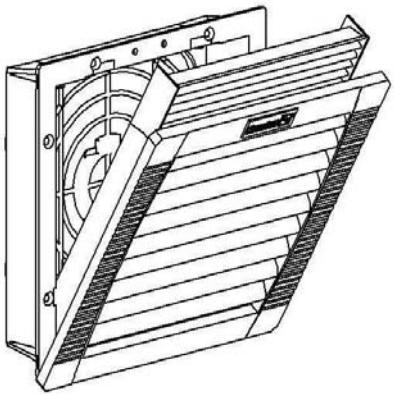

IP55/ TYPE 12 PFA/ PFA EMC

(D) Lesen Sie diese Anweisung und bewahren Sie diese auf.
(GB) Read and save this instruction.
(F) Lisez et sauvegardez ces instructions.
(NL) Deze instructies lezen en bewaren.
(S) Läs och spara dessa anvisningar.
(I) Legga e salvi queste istruzioni.
(E) Lea y salve estas instrucciones.
(RUS) Прочитайте, пожалуйста, данную инструкцию и сохраните ее

Pfannenberg
ELECTRO-TECHNOLOGY FOR INDUSTRY

Stand 06.2012
085408082k

www.filterfan.com

(D) Ausschnitte und Abmessungen
(GB) Cut outs and dimensions
(F) Découpes de montage et dimensions
(NL) Uitsparingen en afmetingen
(S) Urklipp och dimensioner
(I) Dima di foratura e dimensioni
(E) Plantillas y dimensiones
(RUS) Монтажные вырезы и габаритные размеры

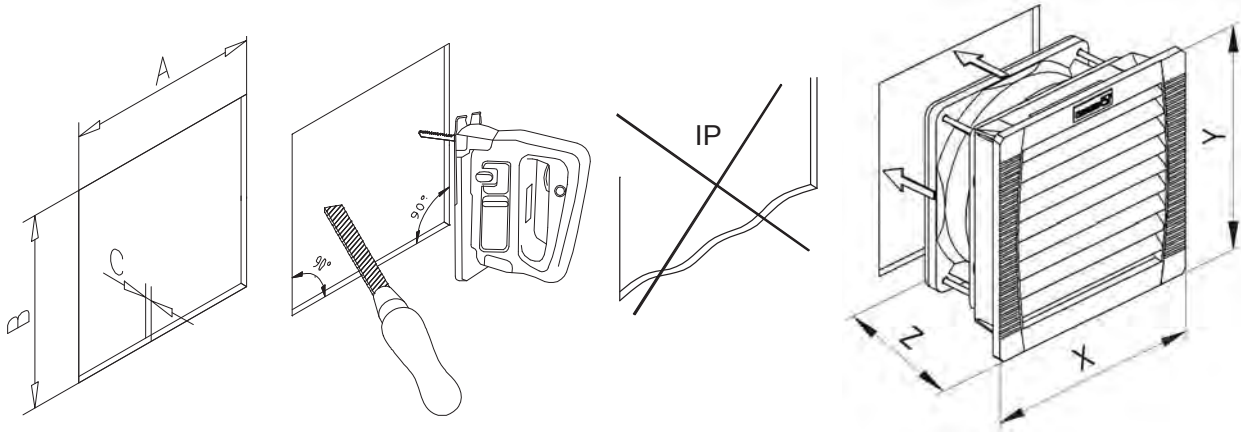

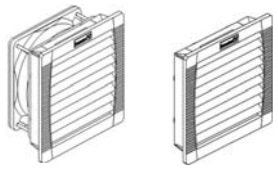		A = B mm(inch)		X = Y mm(inch)	Z mm(inch)		
		Standard	EMC		PF		PFA
		C ≤ 2(0,08") = A $^{+1(0,04")}_{0}$	±0,5 (0,02")		DC	AC	
		C >2(0,08") ≤ 3(0,12") = A $^{+2(0,08")}_{+1(0,04")}$					
PF 11000	PFA 10000	92($3^{5}/_{8}$")	93($3^{21}/_{32}$")	109($4^{19}/_{64}$")	53($2^{3}/_{32}$")	66($2^{19}/_{32}$")	23($^{29}/_{32}$")
PF 22000	PFA 20000	125($4^{59}/_{64}$")	126,5($4^{63}/_{64}$")	145($5^{45}/_{64}$")	69($2^{23}/_{32}$")	75($2^{61}/_{64}$")	31($1^{7}/_{32}$")
PF 32000	PFA 30000	177($6^{31}/_{32}$")	178 (7")	202($7^{61}/_{64}$")	87($3^{27}/_{64}$")	93($3^{43}/_{64}$")	40($1^{37}/_{64}$")
PF 42500	PFA 40000	223($8^{25}/_{32}$")	224($8^{53}/_{64}$")	252($9^{59}/_{64}$")	103($4^{1}/_{16}$")		44($1^{47}/_{64}$")
PF 43000					103($4^{1}/_{16}$")	119($4^{11}/_{16}$")	
PF 65000	PFA 60000	291($11^{29}/_{64}$")	292($11^{1}/_{2}$")	320($12^{19}/_{32}$")	157($6^{3}/_{16}$")		46($1^{13}/_{16}$")
PF 65000 SL					131($5^{5}/_{32}$")		
PF 66000					157($6^{3}/_{16}$")		
PF 67000					157($6^{3}/_{16}$")		
PF 67000 SL					134($5^{9}/_{32}$")		

(D) ACHTUNG: Nur in richtiger Einbaulage und bei Nicht-Zerstören der Dichtung ist IP54/ IP55/ Type 12 gewährleistet.
EMC Funktionsgewährleistung nur bei elektrisch leitfähiger Verbindung zwischen EMV- Schirmblech und Montageausschnitt.

(GB) CAUTION: The degree of protection IP54/ IP55/ Type 12 cannot be guaranteed unless the correct installation position and a non-destroyed foam gasket are ensured.
EMC Function cannot be guaranteed unless there is a conductive connection between the EMC-shield and the mounting cut out

(F) ATTENTION: IP54/ IP55/ Type 12 ne peut pas être garantie à moins qu'une position d'installation correcte et une étanchéité intacte soient assurées.
CEM La fonction n'est garantie que dans le cas d'un contact électroconducteur entre la tôle de protection CEM et la découpe pour le montage.

(NL) OPPASSEN: er is slechts sprake van klasse IP54/ IP55/ Type 12, als de montage en positionering precies op de voorgeschreven manier uitgevoerd is en als de afdichting niet beschadigd is.
EMC De functiegarantie geldt uitsluitend als er tussen de EMC-afscherming en de montage-uitsnijding een elektrisch geleidende verbinding bestaat.

(S) VARNING: IP54/ IP55/ Type 12 gäller endast vid rätt monteringdläge och vid hel packning.
EMC Funktionsgarantin gäller endast under förutsättning att det finns en elektriskt ledande förbindelse mellan EMC-skärmplåten och monteringsutskärningen

(I) ATTENZIONE: Il grado di protezione IP54/ IP55/ Type 12 può essere garantito esclusivamente tramite una posizione di montaggio corretta e non interferendo con la guarnizione die tenuta.
EMC Il funzionamento è garantito solo in caso di possibilità di collegamento elettricamente conducibile fra lo schermo in lamiera EMC e l'apertura di montaggio.

(E) PRECAUCION: La clase de protección IP54/ IP55/ Type 12 puede ser garantizida solamente si la hunta está instalada correctamente y sin destrucción.
EMC Sólo se garantiza el funcionamiento con una conexión eléctrica conductiva entre la chapa de proteccion EMC y el recorte de montaje.

(RUS) Внимание: Степень защиты IP54/ IP55/ Type 12 может быть гарантирована только при правильной установке и сохранности уплотнения.
EMC Функционирование возможно при наличии токопроводящего соединения между уплотнительной лентой EMC и монтажной стеной.

(D) Elektrischer Anschluss
(GB) Power connection
(F) Branchement électrique
(NL) Elektrische aansluiting
(S) Elanslutning
(I) Allacciamento elettrico
(E) Conexión de energía
(RUS) Электрическое подключение

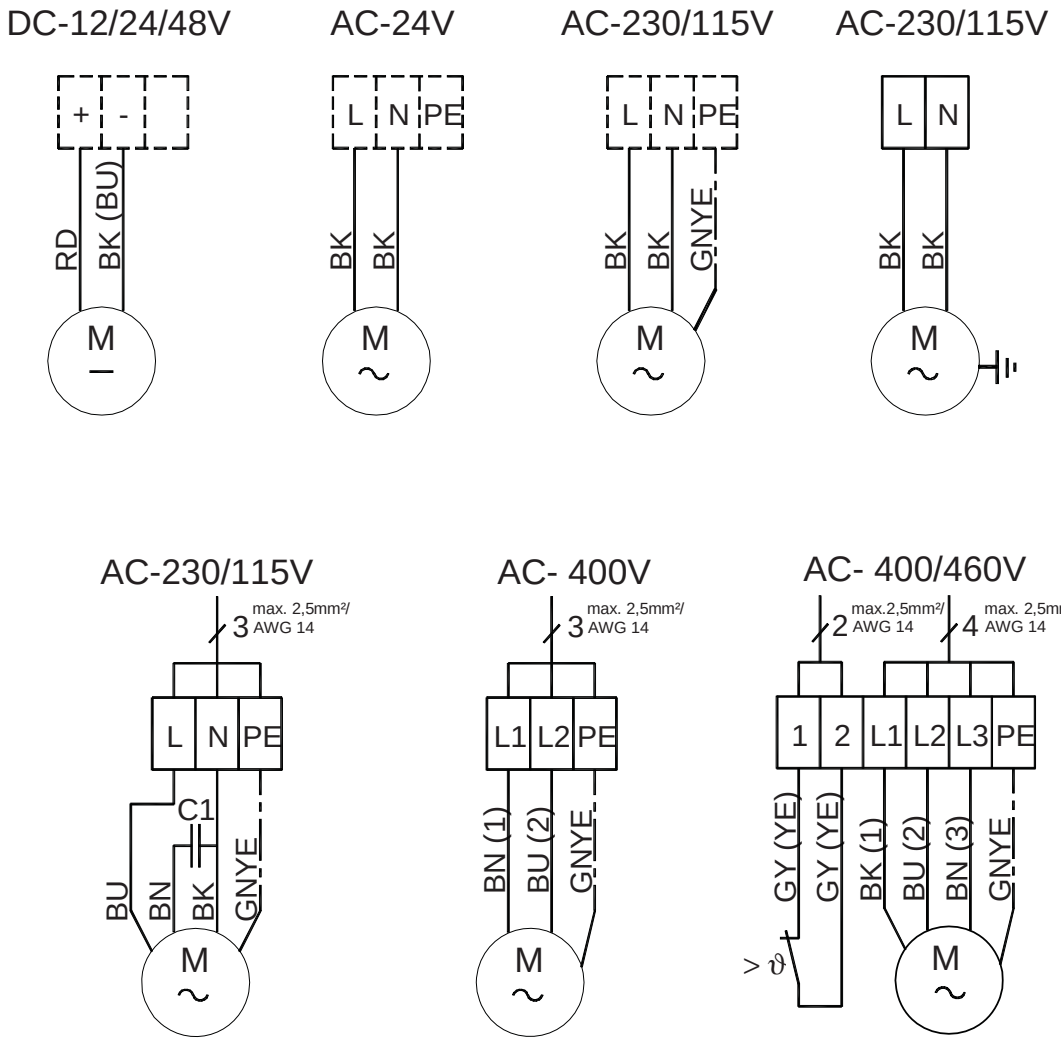

(D) Mindestabstand zwischen Lichtbogen bildenden Bauteilen und Filter: 30,5cm (12'') (UL508A sec. 22)
(GB) Minimum distance of 30,5cm (12") between arcing parts and filters (acc. UL508A sec. 22)
(F) Distance minimale entre les pièces formant un arc et les filtres: 30,5 cm (12'') (UL508A sec. 22)
(NL) Minimum afstand tussen lichtbogen vormende componenten en filters: 30,5cm (12'') (UL508A sec. 22)
(S) Minsta avstånd mellan de ljusbågsbildande delar och filtret: 30,5 cm (12'') (UL508A sec. 22)
(I) Distanza minima fra gli elementi che formano l'arco e il filtro: 30,5 cm (12'') (UL508A sec. 22)
(E) Distancia mínima entre los componentes del arco eléctrico y los filtros: 30,5 cm (12'') (UL508A sec. 22)
(RUS) Минимальное расстояние между деталями, образующими электродугу, и фильтром: 30,5 см (12'') (UL508A sec. 22)

(D) Technische Daten
(GB) Technical data
(F) Caractéristiques Techniques
(NL) Technische gegevens
(S) Tekniska data
(I) Dati tecnici
(E) Datos técnicos
(RUS) Технические данные

	U +/- DC	U ~ 50/60 Hz * 60Hz	P	I				Kg
	V	V	W	A				standard (EMC)
PF 11.000	12	--	2,4	0,2	-40.. + 55℃ -40.. +131℉	-40.. + 70℃ -40.. +158℉	6A	0,16 (0,19)
PF 11.000	24	--	2,4	0,1				
PF 11.000	48	--	2,6	0,05				
PF 11.000	--	24	12/11	0,5/0,5				0,55 (0,58)
PF 11.000	--	115	12/11	0,15/0,15				
PF 11.000	--	230	12/11	0,07/0,06				
PF22.000	12	--	5	0,42	-40.. + 55℃ -40.. +131℉	-40.. + 70℃ -40.. +158℉	6A	0,44 (0,49)
PF22.000	24	--	5	0,21				
PF22.000	48	--	5	0,1				
PF22.000	--	24	20/20	1,05/1,02				0,7 (0,76)
PF22.000	--	115	20/20	0,235/0,23				
PF22.000	--	230	19/18	0,12/0,18				
PF 32.000	12	--	5	0,42	-40.. + 55℃ -40.. +131℉	-40.. + 70℃ -40.. +158℉	6A	0,61 (0,7)
PF 32.000	24	--	5	0,21				
PF 32.000	48	--	5	0,1				
PF 32.000	--	115	20/20	0,235/0,23				0,87 (0,96)
PF 32.000	--	230	19/18	0,12/0,18				
PF 42.500	12	--	6	0,5	-40.. + 55℃ -40.. +131℉	-40.. + 70℃ -40.. +158℉	6A	0,92 (1,08)
PF 42.500	24	--	4,7	0,2				
PF 42.500	48	--	4,6	0,1				
PF 42.500	--	115	18/17	0,25/0,25				1,18 (1,34)
PF 42.500	--	230	18/17	0,12/0,1				
PF 43.000	12	--	12	1	-40.. + 55℃ -40.. +131℉	-40.. + 70℃ -40.. +158℉	6A	1,51 (1,77)
PF 43.000	24	--	12	0,5				
PF 43.000	48	--	12	0,25				
PF 43.000	--	115	40/40	0,5/0,5				1,67 (1,83)
PF 43.000	--	230	45/39	0,32/0,26				
PF 43.000	--	400	41/38	0,13/0,13				
PF 65.000	--	115	75/90	0,66/0,8	-40.. + 55℃ -40.. +131℉	-40.. + 70℃ -40.. +158℉	6A	3,2 (3,43)
PF 65.000	--	230	65/80	0,3/0,36				
PF 65.000 SL	--	115	64/80	0,58/0,7	-40.. + 55℃ -40.. +131℉	-40.. + 70℃ -40.. +158℉	6A	3,3 (3,53)
PF 65.000 SL	--	230	64/80	0,29/0,35				
PF 66.000	--	115	110/160	0,96/1,4	-40.. + 55℃ -40.. +131℉	-40.. + 70℃ -40.. +158℉	6A	3,2 (3,43)
PF 66.000	--	230	115/150	0,51/0,66				
PF 66.000	--	400/460	120/155	0,26/0,25				
PF 67.000	--	115	140/195	1,23/1,71	-40.. + 55℃ -40.. +131℉	-40.. + 70℃ -40.. +158℉	6A	3,7 (3,93)
PF 67.000	--	230	135/215	0,59/1				
PF 67.000	--	400/460	140/170	0,35/0,425				
PF 67.000 SL	--	115	120/165	1,05/1,45	-40.. + 55℃ -40.. +131℉	-40.. + 70℃ -40.. +158℉	6A	3,9 (4,13)
PF 67.000 SL	--	230	127/180	0,56/0,79				
PF 67.000 SL	--	400/460	110/165	0,2/0,23				
PFA 10.000	--		--		-40.. + 55℃ -40.. +131℉	-40.. + 70℃ -40.. +158℉	--	0,06 (0,09)
PFA 20.000								0,12 (0,18)
PFA 30.000								0,26 (0,35)
PFA 40.000								0,46 (0,62)
PFA 60.000								0,7 (0,93)

(D) Ersatzteilbeschaffung
(GB) Ordering spare parts
(F) Approvisionnement en pièces détachées
(NL) Bestelling van onderdelen
(S) Beställning av reservdelar
(I) Fornitura delle parti di ricambio
(E) Adquisición de repuestos
(RUS) Приобретение запасных деталей

www.filterfan.com · spareparts@pfannenberg.com

	U +/- DC	U ~ 50/60 Hz	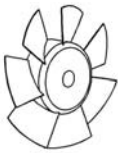	IP54/ TYPE 12 5x	IP 55/ TYPE 12 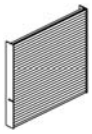 5x
PF 11.000	12V	-	18611000036	18611600029	--
	24V	-	18611000039		
	48V	-	18611000042		
	-	24V	18611000005		
	-	115V	18611000028		
	-	230V	18611000032		
PFA 10.000	--	--	--		
PF 22.000	12V	-	18611000025	18611600030	18611600034
	24V	-	18611000026		
	48V	-	18611000027		
	-	24V	18611000006		
	-	115V	18611000009		
	-	230V	18611000016		
PFA 20.000	--	--	--		
PF 32.000	12V	-	18611000025	18611600031	18611600035
	24V	-	18611000026		
	48V	-	18611000027		
	-	24V	18611000006		
	-	115V	18611000009		
	-	230V	18611000016		
PFA 30.000	--	--	--		
PF 42.500	12V	-	18611000037	18611600032	18611600036
	24V	-	18611000040		
	48V	-	18611000054		
	-	115V	18611000029		
	-	230V	18611000033		
PF 43.000	12V	-	18611000055		
	24V	-	18611000056		
	48V	-	18611000057		
	-	115V	18611000012		
	-	230V	18611000019		
	-	400V	18611000022		
PFA 40.000	--	--	--		
PF 65.000	-	115V	18611000047	18611600033	18611600037
	-	230V	18611000044		
PF 66.000	-	115V	18611000048		
	-	230V	18611000045		
	-	400/460V	18611000050		
PF 67.000	-	115V	18611000049		
	-	230V	18611000046		
	-	400/460V	18611000051		
PFA 60.000	--	--	--		
PF 65.000 SL	-	115V	18611000004	--	18611600037
	-	230V	18611000001		
PF 67.000 SL	-	115V	18611000003		
	-	230V	18611000000		
	-	400/460V	18611000065		

(D) Filterwechsel / Wartung
(GB) Filter change / Maintenance
(F) Remplacement de la cartouche Filtrante / Entretien
(NL) Filter vervanging / Onderhoud
(S) Filterbyte / Underhåll
(I) Filtri di ricambio / Manutenzione
(E) Cambio de filtro / Mantenimiento
(RUS) Замена фильтра/ Техническое обслуживание

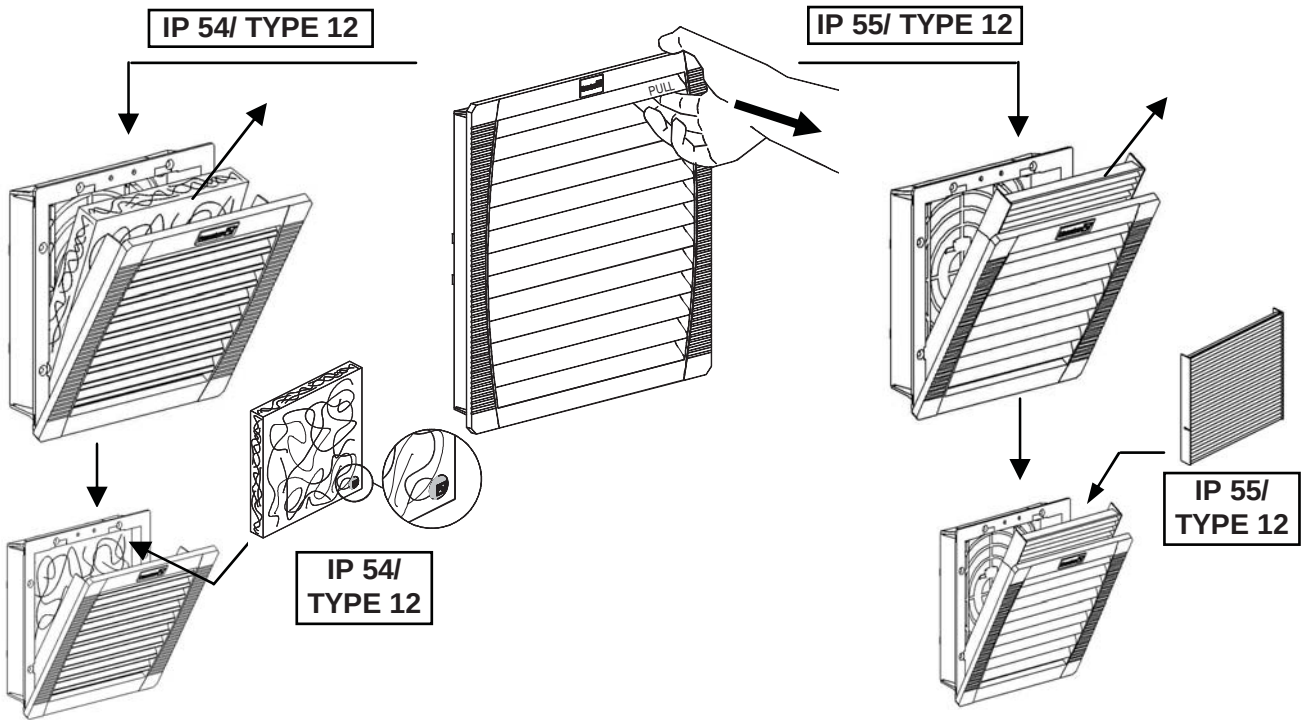

(D) IP 54/ 55/ TYPE 12: Auf korrekte Einbaulage des Filters achten
(GB) IP 54/ 55/ TYPE 12: Make sure that the filter is installed in the proper position.
(F) IP 54/ 55/ TYPE 12: Veillez à insérer correctement le filtre
(NL) IP 54/ 55/ TYPE 12: Op correcte inbouwpositie van het filter letten
(S) IP 54/ 55/ ZYPE 12: Beakta korrekt monteringsläge för filtret
(I) IP 54/ 55 /TYPE 12: Rispettare la corretta posizione di montaggio del filtro.
(E) IP 54/ 55 /TYPE 12: Procure que la posición de montaje del filtro sea la correcta
(RUS) IP 54/ 55/ TYPE 12: Следите за правильным положением фильтра

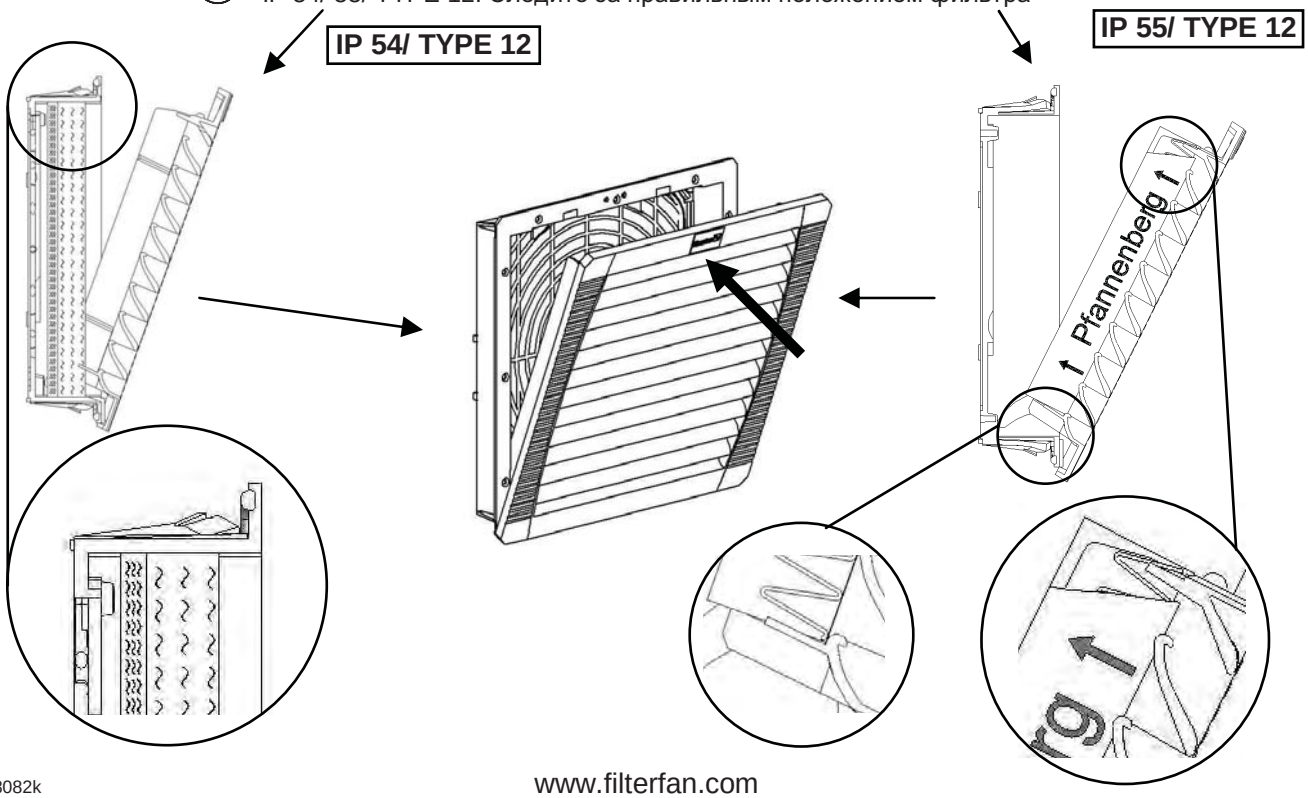

Ⓓ Wechsel der Luftförderrichtung
Ⓖⓑ Changing the air flow direction
Ⓕ Changement de la direction de l’air
Ⓝⓛ Omwisselen van de luchttransportrichting
Ⓢ Ändring av riktning för luftmatning
Ⓘ Cambio di direzione del flusso d'aria
Ⓔ Cambio de dirección del flujo de aire
Ⓡⓤⓢ Изменение направления движения воздуха

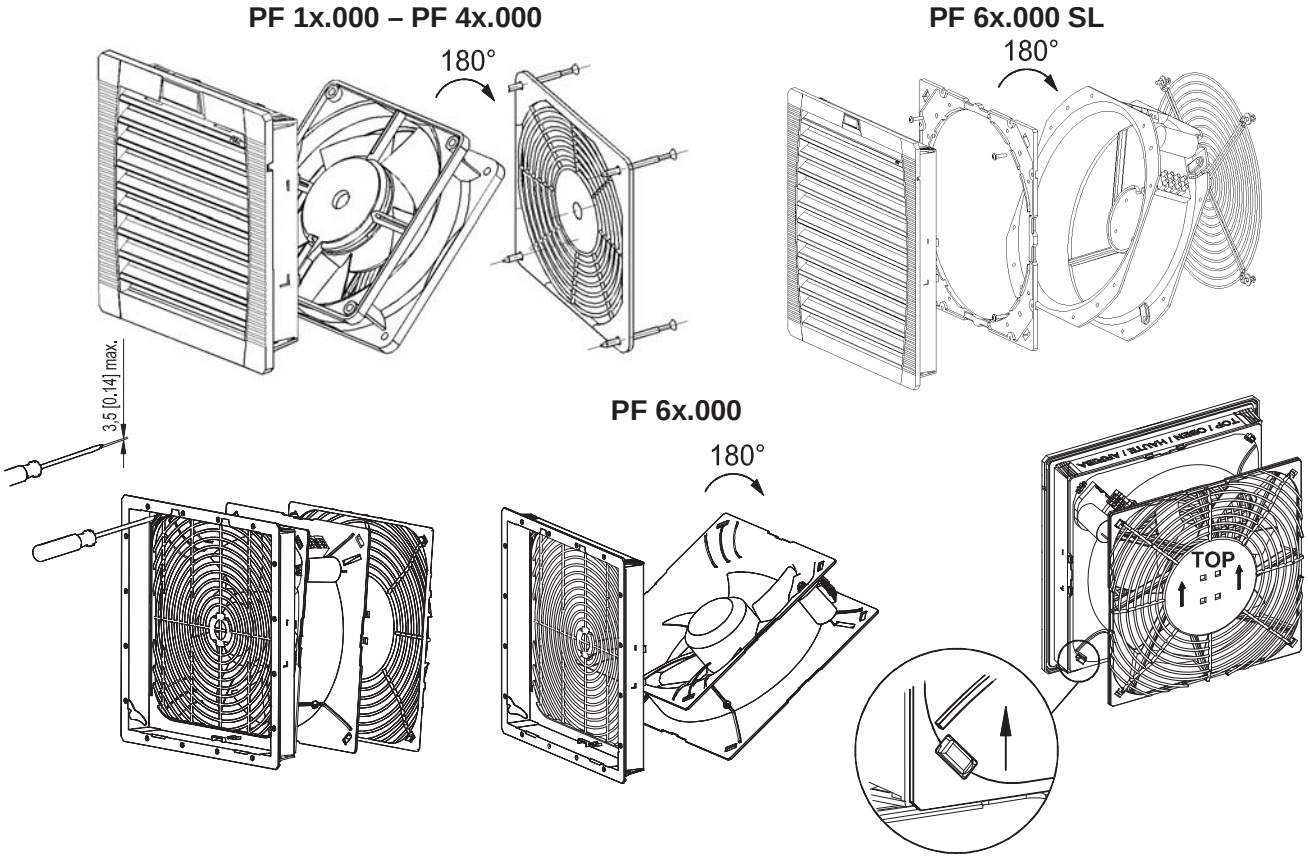

Ⓓ Verwenden Sie **ausschließlich Original Pfannenberg Ersatzteile**, anderenfalls erlöschen Gewährleistung und Zulassungen. Weiterhin sind bei Nichtverwendung der Original Ersatzteile Schutzarten und Leistungsdaten nicht mehr sichergestellt, die Schutzart reduziert sich dann auf Type 1.

Ⓖⓑ Warranty and licenses **are limited to original Pfannenberg spare parts** and become void if other spare parts are used. Furthermore, ingress protection and capacity levels are no longer ensured if original Pfannenberg spare parts are not used. As a result the ingress protection will be reduced to Type 1.

Ⓕ Veuillez utiliser **exclusivement les pièces détachées d’origine de Pfannenberg**, sinon la garantie et les homologations ne sont plus applicables. Il en va de même pour les types de protection et les caractéristiques de performance, la protection se réduit alors à type 1.

Ⓝⓛ Gebruik **uitsluitend originele onderdelen van Pfannenberg**, omdat anders garantiewaarborgen en certificeringen vervallen. Tevens zijn bij het niet gebruiken van originele onderdelen beveiligingsgraden en prestatiespecificaties niet langer gewaarborgd. In dit geval vermindert de beveiligingsgraden tot type 1.

Ⓢ Använd **uteslutande Pfannenbergs original reservdelar**, annars upphör garantin att gälla. Vidare kan eventuella fel eller reparationer som beror på att inte original Pfannenberg reservdelar används leda till att skyddsklass och effektdata inte längre säkerställas. I det tillfället skyddsklassen vilja reducera till på maskin 1.

Ⓘ Utilizzare **esclusivamente parti di ricambio originali Pfannenberg**, pena l'estinzione della garanzia e delle autorizzazioni. Inoltre, in caso di mancato utilizzo delle parti di ricambio originali, non sono più garantiti i tipi di protezione e le caratteristiche di funzionamento. Di conseguenza il grado di protezione sarà ridotto a tipo 1.

Ⓔ Utilice **únicamente repuestos originales de Pfannenberg**; de lo contrario, quedarán sin validez la garantía y las licencias. Además, en caso de no usar dichos repuestos originales, no se podrán garantizar la seguridad ni los datos de rendimiento. En este caso el tipo de protección se reduce al tipo 1.

Ⓡⓤⓢ Используйте **только оригинальные запасные части от фирмы Pfannenberg**, в противном случае прекращается действие гарантии и допуска к эксплуатации. Кроме того, мы не гарантируем при использовании неоригинальных деталей соблюдение требований по категории защиты и рабочих характеристик. Вид защиты в этом случае снижается до категории 1.

Pfannenberg
ELECTRO-TECHNOLOGY FOR INDUSTRY

Konformitätserklärung / Declaration of Conformity

gemäß den EG-Richtlinien / according to EC directives

- **Maschinenrichtlinie / Machinery directive 2006/42/EC**
- **Elektromagnetische Verträglichkeit / Electromagnetic compatibility 2004/108/EC**

Die Geräte / The devices:

Hersteller / Manufacturer:	**Pfannenberg GmbH**
Produkt / Product:	**Filterlüfter / Filter Fan**
Type:	PF 11.000, PF 22.000, PF 32.000, PF 33.000, PF 42.500, PF 43.000, PF 65.000, PF 65000 –SL, PF 66.000, PF67000, PF 67.000 –SL, PFA 10.000, PFA 20.000, PFA 30.000, PFA 40.000, PFA 60.000

wurden entwickelt, konstruiert und gefertigt in Übereinstimmung mit den o.g. EU-Richtlinien, in alleiniger Verantwortung von:
were developed, designed and manufactured to comply with the above-mentioned EC directives, under the sole responsibility of:

Pfannenberg GmbH
Werner-Witt-Str. 1
D-21035 Hamburg

Folgende harmonisierte Normen wurden angewandt / The following harmonised standards were applicable:

- DIN EN ISO 12100-2 (2004) Sicherheit von Maschinen - Grundbegriffe, allgemeine Gestaltungsleitsätze - Teil 1: Grundsätzliche Terminologie, Methodologie (ISO 12100-1:2003); Deutsche Fassung EN ISO 12100-1:2003+ A1:2009
  Safety of machinery - Basic concepts, general principles for design - Part 1: Basic terminology, methodology (ISO 12100-1:2003); German version EN ISO 12100-1:2003+A1:2009
- DIN EN 60204-1 (2007) Sicherheit von Maschinen – Elektrische Ausrüstung von Maschinen – Teil 1: Allgemeine Anforderungen (IEC 60204-1:2005, modifiziert); Deutsche Fassung EN 60204-1:2006 +A1:2009
  Safety of machinery – Electrical equipment of machines – Part 1: General requirements (IEC 60204-1:2005, modified); German version EN 60204-1:2006 +A1:2009
- DIN EN 60335-2-80 (2009) Sicherheit elektrischer Geräte für den Hausgebrauch und ähnliche Zwecke - Teil 2-80: Besondere Anforderungen für Ventilatoren (IEC 60335-2-80:2002 + A1:2004 + A2:2008)
  Household and similar electrical appliances - Safety - Part 2-80: Particular requirements for fans
- DIN EN 61000-3-2 (2010) Elektromagnetische Verträglichkeit (EMV) - Teil 3-2: Grenzwerte - Grenzwerte für Oberschwingungsströme (Geräte-Eingangsstrom <= 16 A je Leiter) (IEC 61000-3-2:2005 + A1:2008 + A2:2009); Deutsche Fassung EN 61000-3-2:2006 + A1:2009 + A2:2009 / Electromagnetic compatibility (EMC) - Part 3-2: Limits - Limits for harmonic current emissions (equipment input current <= 16 A per phase) (IEC 61000-3-2:2005 + A1:2008 + A2:2009); German version EN 61000-3-2:2006 + A1:2009 + A2:2009
- DIN EN 61000-3-3 (2009) Elektromagnetische Verträglichkeit (EMV) - Teil 3-3: Grenzwerte - Begrenzung von Spannungsänderungen, Spannungsschwankungen und Flicker in öffentlichen Niederspannungs-Versorgungsnetzen für Geräte mit einem Bemessungsstrom <=16 A je Leiter, die keiner Sonderanschlussbedingung unterliegen (IEC 61000-3-3:2008); Deutsche Fassung EN 61000-3-3:2008 / Electromagnetic compatibility (EMC) – Part 3-3: Limits - Limitation of voltage changes, voltage fluctuations and flicker in public low-voltage supply systems, for equipment with rated current <=16 A per phase and not subject to conditional connection (IEC 61000-3-3:2008); German version EN 61000-3-3:2008
- DIN EN 61000-6-2 (2006) Fachgrundnorm, Störfestigkeit für Industriebereich /
  Electromagnetic compatibility (EMC), Generic standards: Immunity for industrial environments
- DIN EN 61000-6-3 (2007) Fachgrundnorm, Störaussendung im Wohnbereich /
  Electromagnetic compatibility (EMC), Generic standards; Emission standard for residential
- DIN EN 60529 (2000) Schutzarten durch Gehäuse (IP-Code) / Degrees of protection provided by enclosures (IP code)
- DIN IEC 60038 (2002) IEC-Normspannungen / IEC standard voltages

Folgende nationale Normen, Richtlinien und Spezifikationen wurden angewandt:
The following standards, guidelines and specifications were applicable at national level:

- TRBS 2131 Elektrische Gefährdungen / electrical hazards
- GPSG Geräte- und Produktsicherheitsgesetz / German law - covering equipment and product safety

Eine Technische Dokumentation ist beim Hersteller vorhanden, die Montage-/Betriebsanleitung liegt dem Gerät bei. Die Sicherheitshinweise sind zu beachten. Diese Erklärung bescheinigt die Übereinstimmung mit den genannten Richtlinien.
Bevollmächtigte Person für die Zusammenstellung der technischen Unterlagen siehe Unterzeichner.
The manufacturer is in possession of the technical documentation, the installation/operation instruction is attached to the device. The safety references are to be considered. This explanation certifies the agreement with the guidelines mentioned.
Authorised person to compile the technical file see subscriber.

Hamburg, Oktober 2010
P/N 085506618 Rev.Nr.:09

Nils Halm
Technischer Leiter / Technical Director

ITEM 212

A Pentair Company
Hoffman Enclosures Inc.
2100 Hoffman Way
Anoka, MN 55303–1745
(763) 422–2211
www.hoffmanonline.com

Light Package Switches
Interruptores ligeros del Paquete

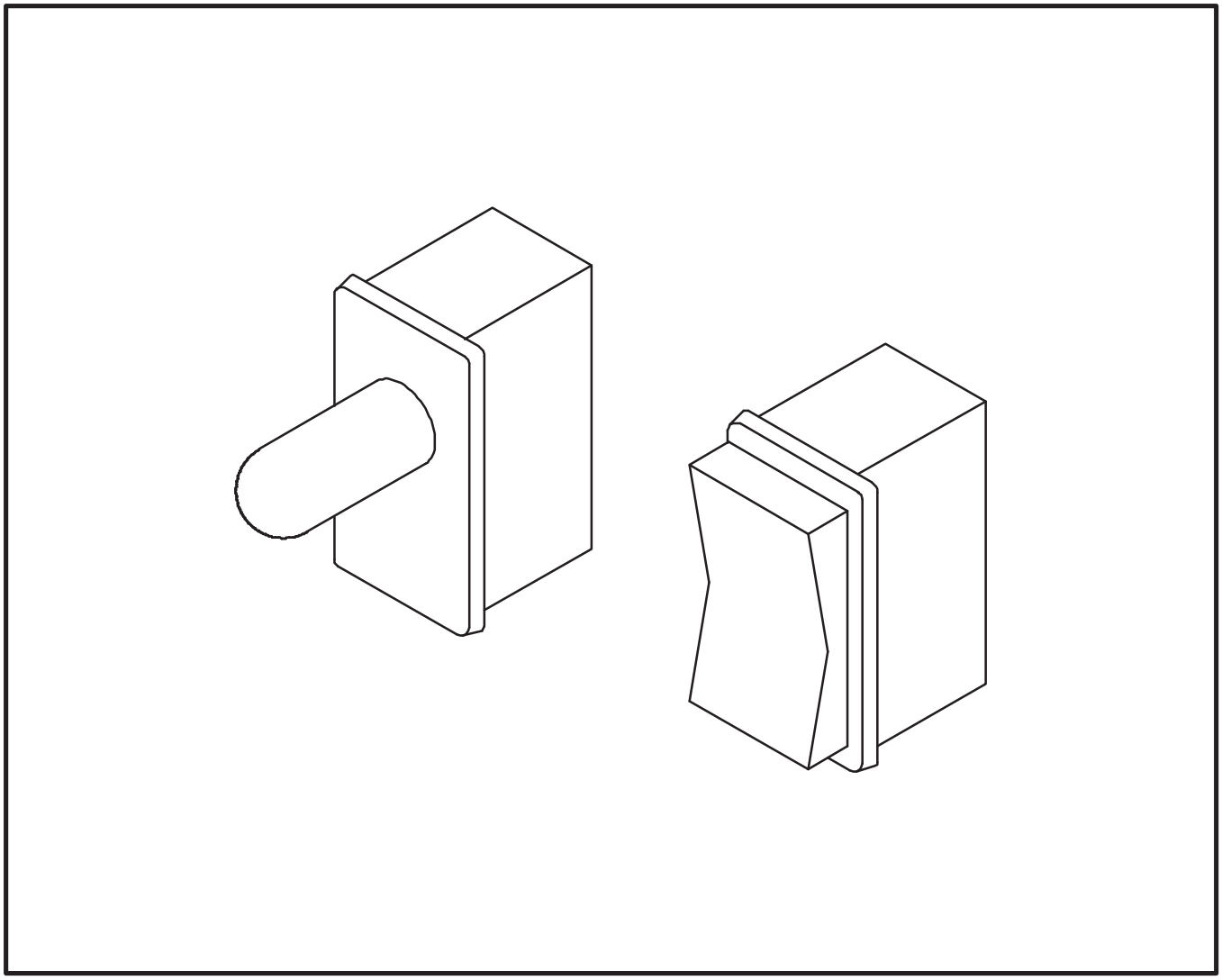

 © 2004 Hoffman Enclosures Inc. P/N 36301001 87566341

GENERAL SAFETY INFORMATION

1. Before installing switches, read these instructions carefully. Failure to follow instructions could damage the product or cause a hazardous condition.
2. Route supply wires away form door hinge, sharp edges, etc.

⚠ WARNING

To avoid electric shock and equipment damage, disconnect any power supplies to the enclosure before installing the switch. Do not energize any circuits before all internal and external electrical and mechanical clearances are checked to assure that all assembled equipment functions safely and properly.

Before drilling mounting holes, check all mechanical and electrical clearances to verify latch rods and other enclosure accessories will operate freely without interference.

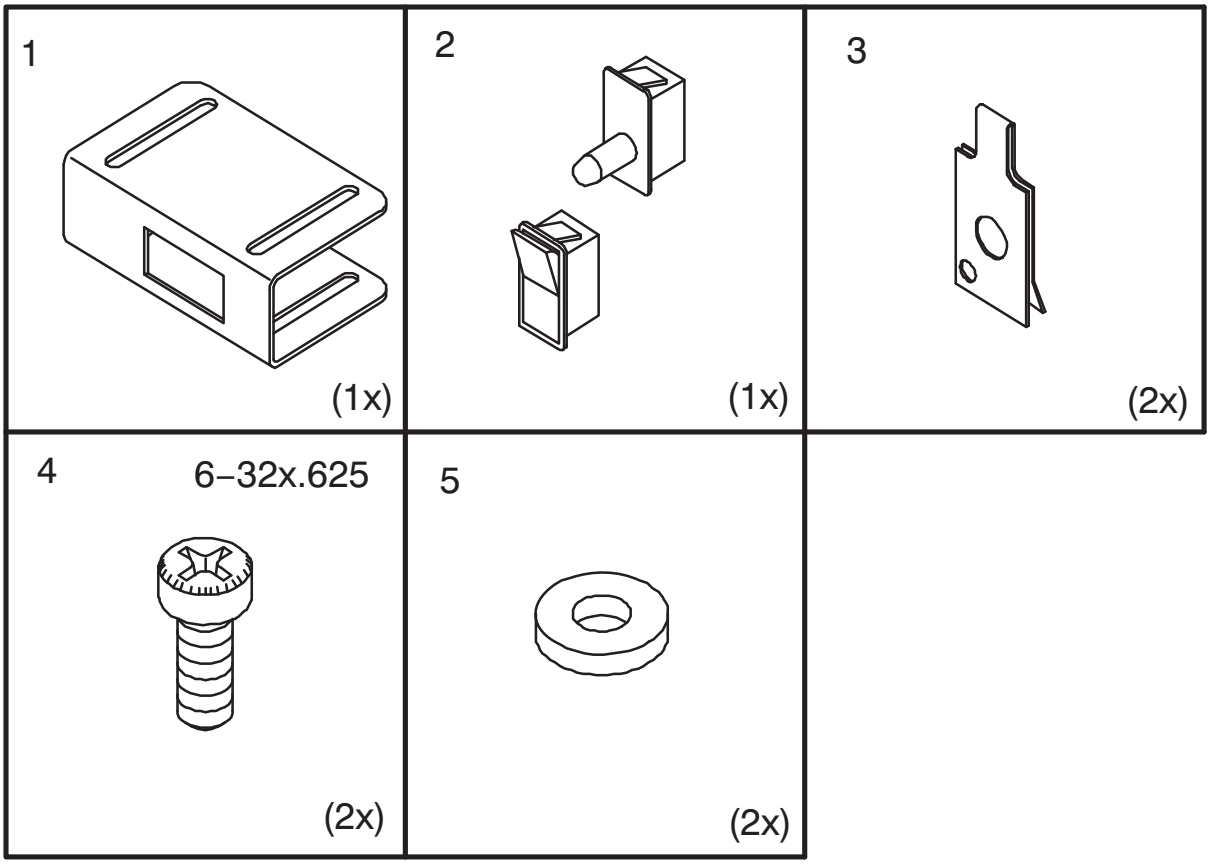

© 2004 Hoffman Enclosures Inc.

WIRING

1. All wiring must comply with applicable national and local electrical codes and ordinances; all authorities having jurisdiction.
2. Connect the switch according to the electrical schematic shown below.

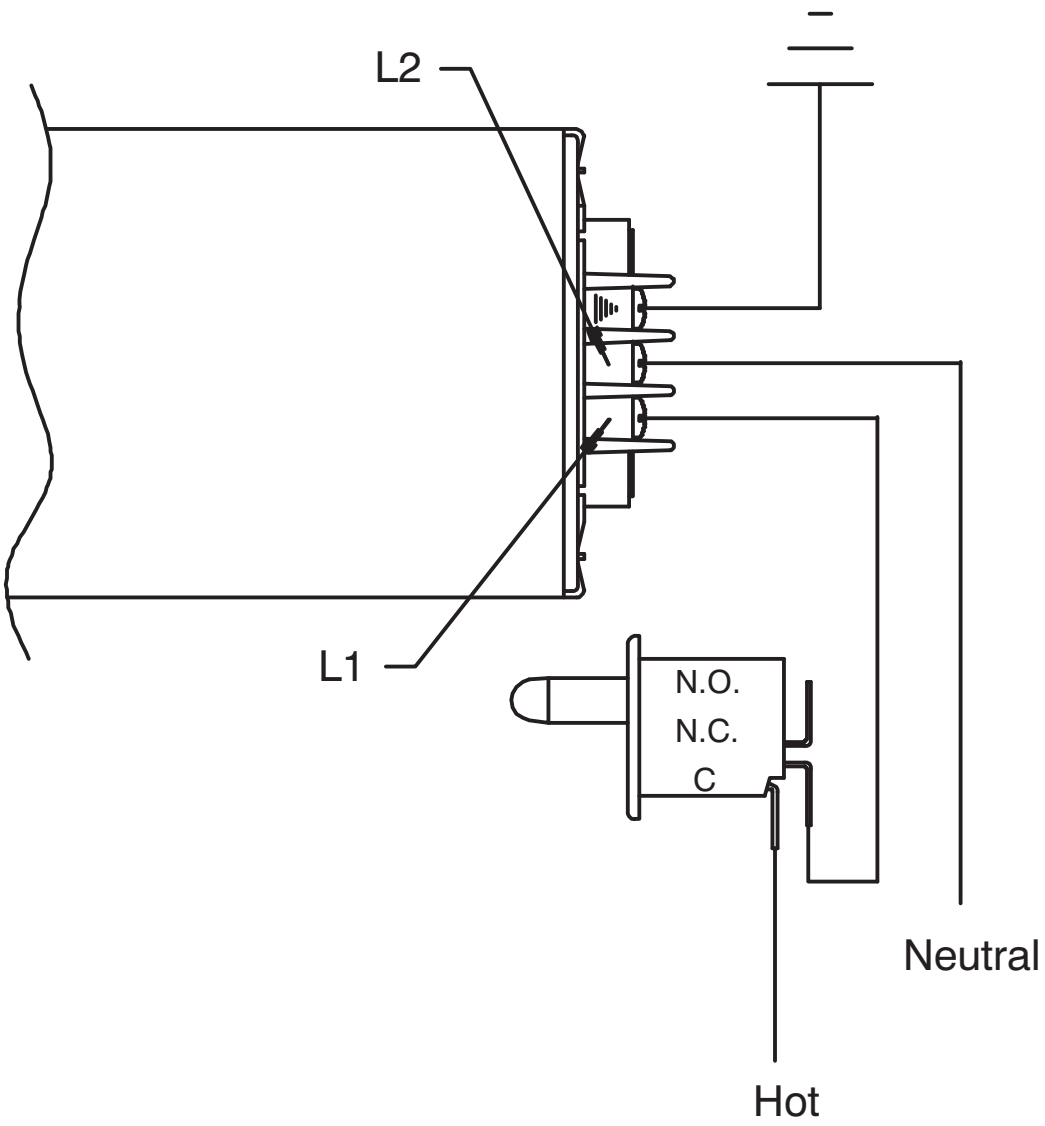

© 2004 Hoffman Enclosures Inc.

LOCATION AND MOUNTING
Door Switch (ALFSWD) Manual Switch (ALFSWM)

Note: Spacers (item 5) may have to be used if gasket or retainer interferes with the switch.

PROLINE®

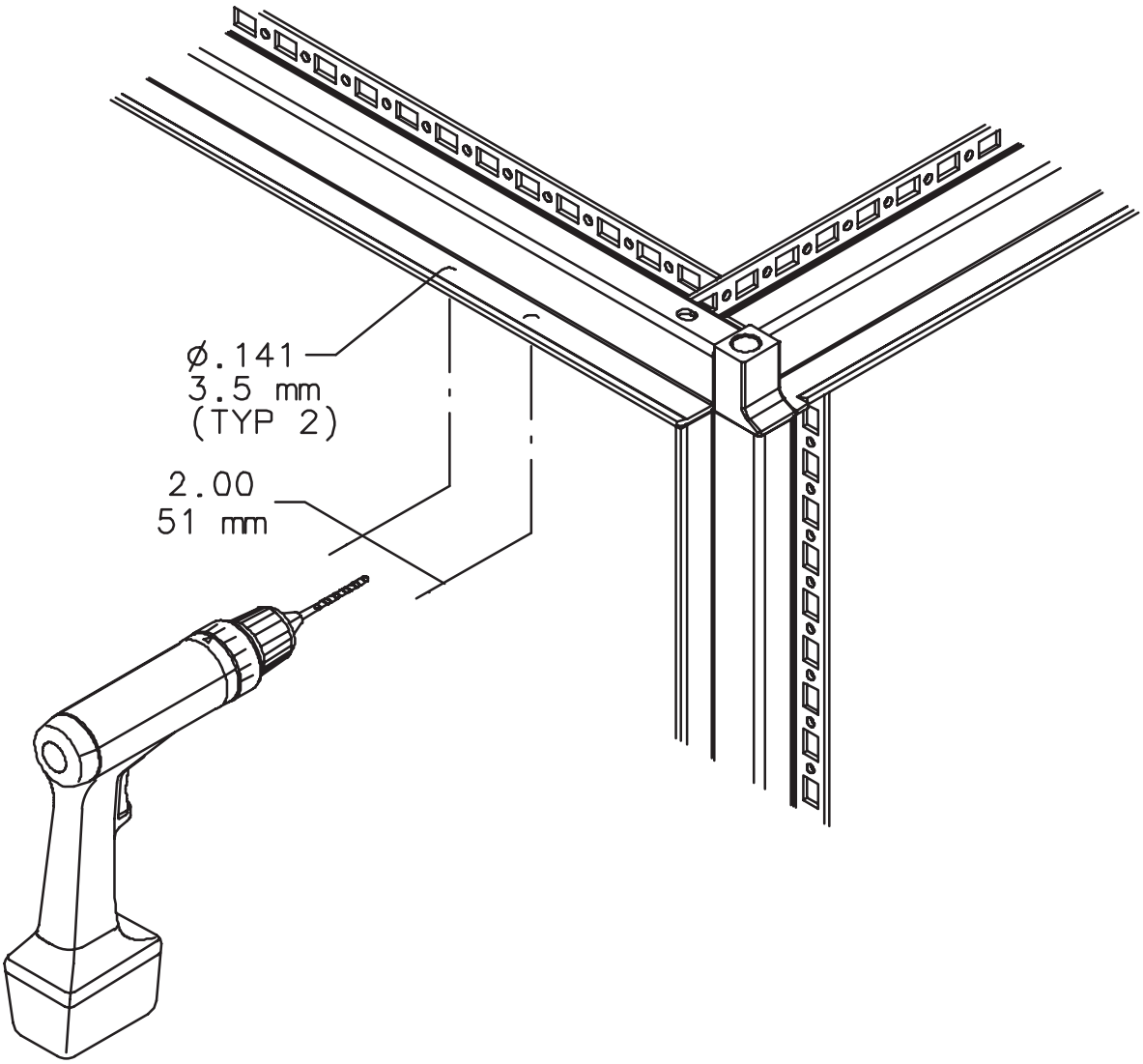

1

© 2004 Hoffman Enclosures Inc.

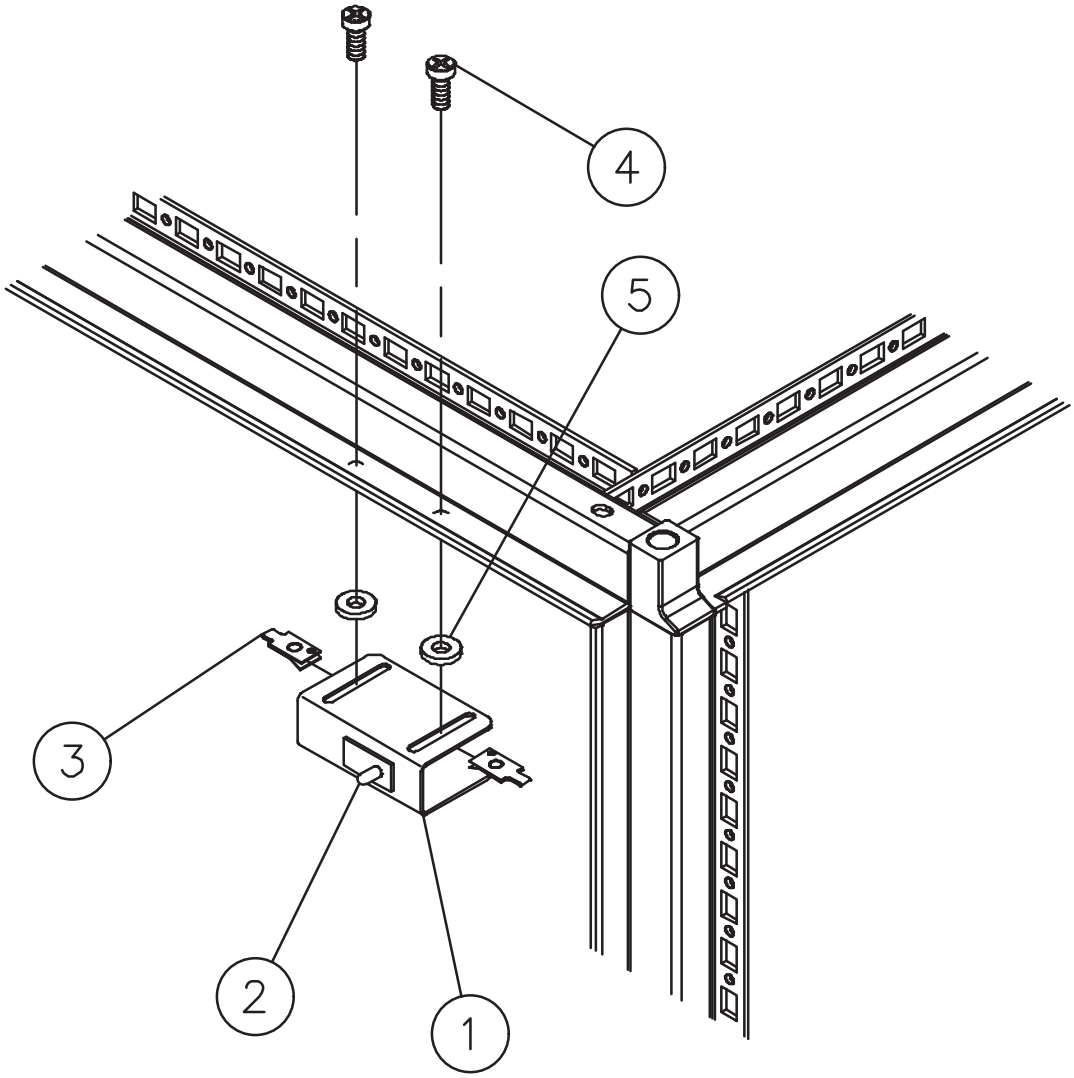

2

© 2004 Hoffman Enclosures Inc.

LOCATION AND MOUNTING
Door Switch (ALFSWD) Manual Switch (ALFSWM)

Note: Spacers (item 5) may have to be used if gasket or retainer interferes with the switch.

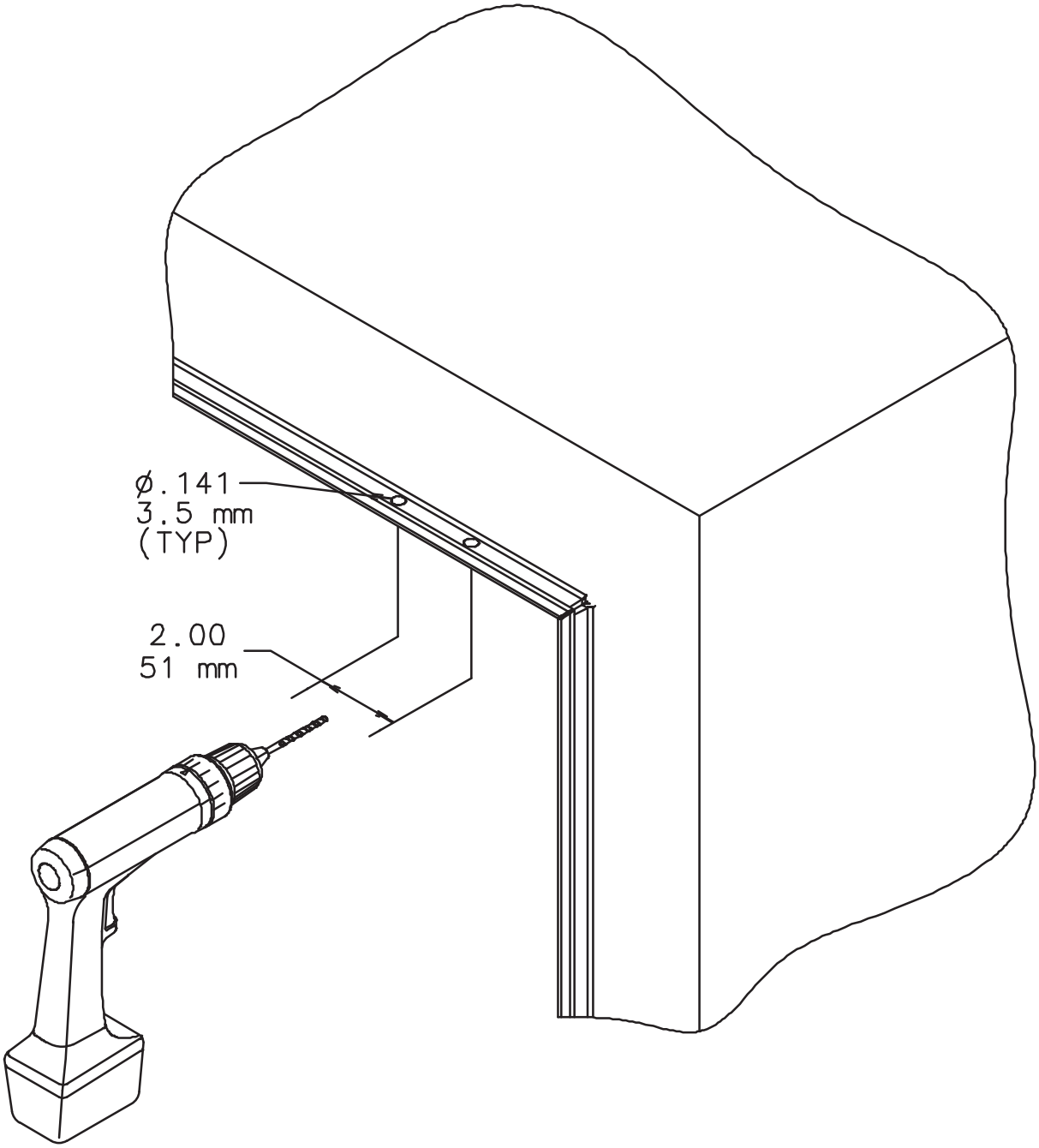

1

© 2004 Hoffman Enclosures Inc.

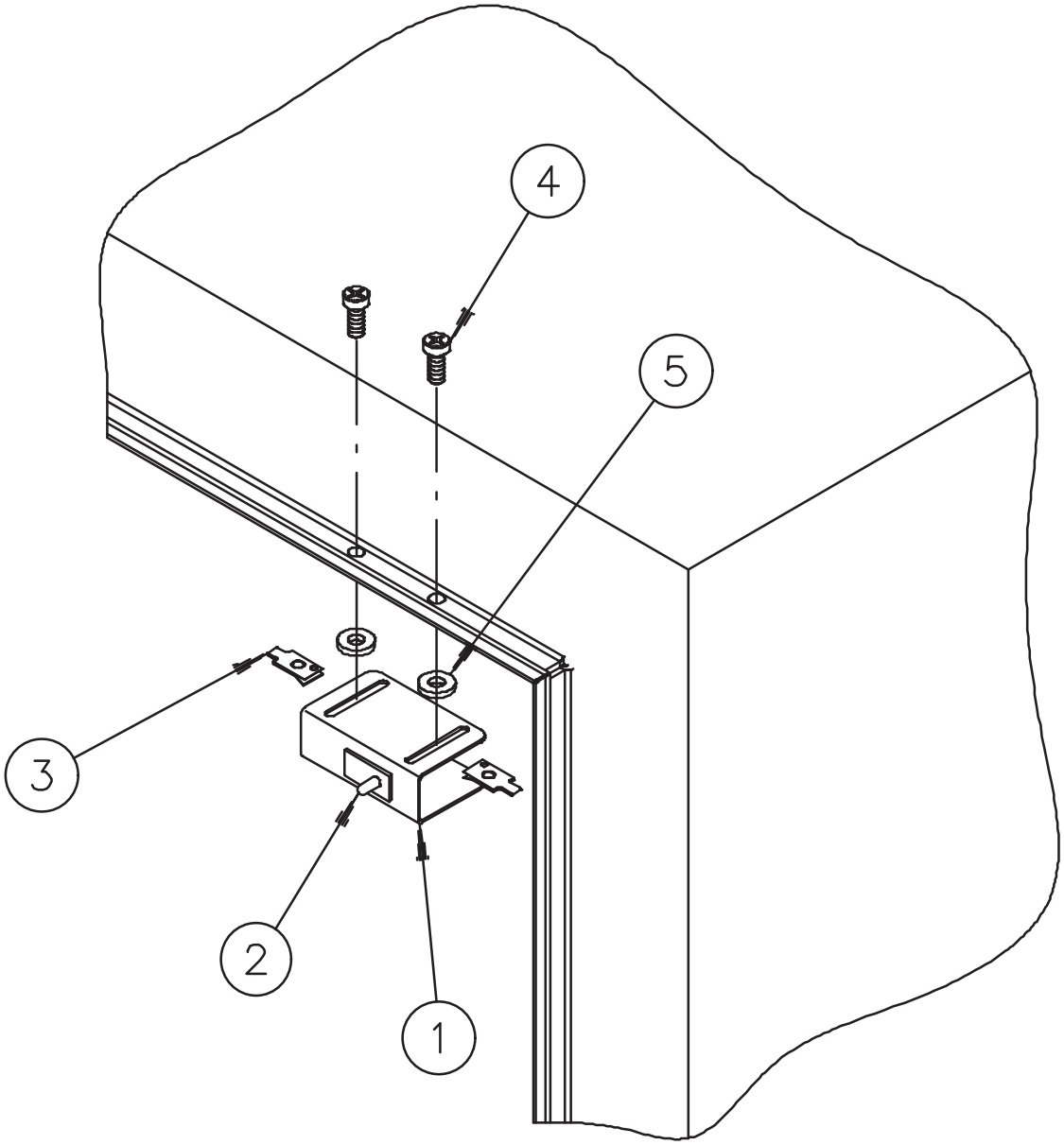

2

NOTE: For the door to properly activate the door switch, the bracket (item 1) must be positioned to enable the door to push the plunger of the switch (item 2) a minimum of .13 inches (3 mm), but no more than .50 inches (13 mm).

© 2004 Hoffman Enclosures Inc.

Small Thermostat

ISCKT-011

- *Compact design*
- *Wide adjustment range*
- *Available with °F or °C scale*
- *Color coded temperature dials*
- *DIN rail mountable*

Thermostat "NC" (normally closed):
Thermostat opens at temperature rise. Comes with a red temperature dial.

Thermostat "NO" (normally open):
Thermostat closes at temperature rise. Comes with a blue temperature dial.

Technical Data ISCKT 011

Part No.	Contact type	Scale on housing
ISCKT-011-NC	normally closed	32 - 140°F
ISCKT-011-NO	normally open	32 - 140°F
ISCKT-011-NCC	normally closed	0 - 60°C
ISCKT-011-NOC	normally open	0 - 60°C

Sensor element:	Thermostatic bi-metal
Maximum tolerance:	±7.2°F (4K)
Switching difference (hysteresis):	12.6°F ± 5.4°F (7°C ± 3K)
Service life:	100,000 cycles
Switching capacity (max. load):	15A resistive/2A inductive @ 120 VAC 10A resistive/2A inductive @ 250 VAC DC 30W
EMI/EMC compliance:	EN 55014-1-2, EN 61000-3-2, EN 61000-3-3
Connections:	2-pole terminal for AWG 14 max. (2.5 mm²)
Mounting:	Clip for 35 mm DIN rail (EN 50022)
Dimensions (H x W x D):	2.4 x 1.3 x 1.7" (60 x 33 x 43 mm)
Housing:	Plastic, UL94V-0
Weight:	1.27 oz (36 g)
Protection type:	IP 20
Operating/storage temperature:	-4 to 176°F (-20 to 80°C)
Agency approvals:	VDE, UL, CSA

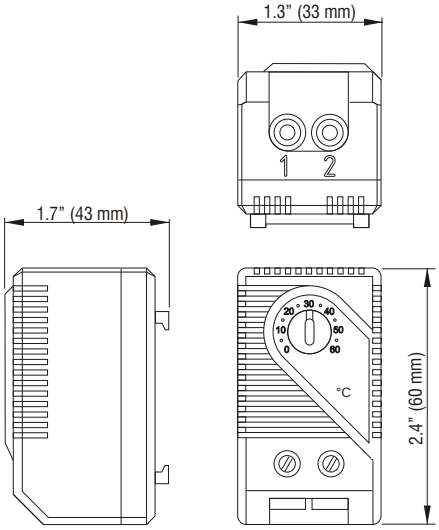

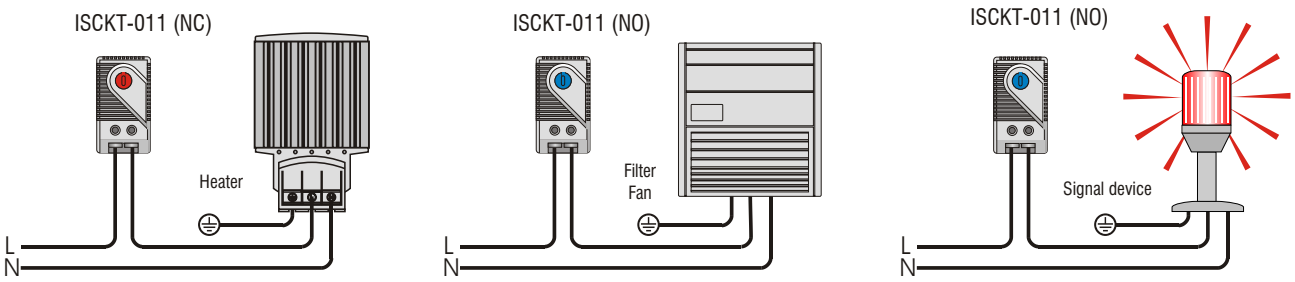

Wiring examples

Installation Instructions

⚠ WARNING

Risk of electric shock
- Do not use in wet locations.
- Use indoors only.
- Turn power off before servicing -- see instructions.
- Properly ground fixture.
- Ensure that no bare wires are exposed outside the electrical connections.

Bulb may shatter and cause injury if broken
- Do not use excessive force when installing bulb.

Risk of burn
- Allow bulb to cool before handling.

Risk of fire
- Not intended for illumination of aquariums.
- Not intended for recessed installation in ceilings or soffits.
- Not intended for surface installation inside built-in furnishings such as kitchen cabinets, china cabinets, or trophy cases.

INSTALLATION PROCEDURES

1) Consult a local licensed electrician or electrical contractor if you are not sure about the installation.
2) Ensure that electricity is TURNED OFF at the main circuit breaker or fuse box. DO NOT ATTEMPT TO INSTALL FIXTURE WITH THE POWER ON.
3) Select a suitable dry mounting location (for indoor use only). Make sure the mounting surface is capable of supporting the fixture.
4) Remove the lens/diffuser by lightly pulling the rear edge towards the front and down. The lens/diffuser should pop out easily. See Figure 1.
5) Remove the bulb by grasping the ends of the bulb and rotating until the bulb becomes loose. Pull straight out from the lamp holder and remove any cardboard inserts present. Be careful not to drop the bulb. See Figure 1.
6) Remove the cover/housing by unscrewing the nuts located behind the bulb. Some models have screws located on the top and bottom of the fixture that hold the cover/housing together.
7) Choose a suitable knock-out location from those provided on the fixture. Remove the knock-out with a screw driver.
8) Insert the threaded end of the strain relief (provided in the installation kit) into the selected opening on the fixture. Secure the strain relief by tightening the lock nut. The lock nut should be tightened with a tool such as a pair of pliers to ensure the strain relief is properly grounded to the fixture.
9) Install the wire to meet electrical codes. Tighten the two screws on the strain relief connector to secure the wires. Make sure wire insulation is stripped as follows:
   Solid wire and 7 strands or less: 5/16"
   Stranded wire: 3/8"
   Combinations involving 14AWG: 5/16", 20 and 22AWG:1/2"
10) Connect the hot (black) AC supply wire(s) to the hot (black) wire(s) of the fixture. Secure the connection with the wire nuts provided. See Figure 2.
11) Connect the white (neutral) AC supply wire(s) to the neutral (white) wire(s) of the fixture. Secure the connection with the wire nuts provided. See Figure 2.
12) Connect the ground (green or copper) AC supply wire to the green or copper ground wire of the fixture. Secure the connection with the wire nuts provided. If your electrical system contains no grounding wire, you should consult a qualified electrician before proceeding with the installation. See Figure 2.
13) Ensure that no bare wires are exposed after making the electrical connections.
14) Arrange the wires inside the fixture and reattach the cover/housing. Tighten the screws or nuts to ensure that all the wires and connections are sealed properly inside the fixture without "pinching" any wires.
15) Place the fixture in the location where it is to be mounted and mark the position of the keyholes with a pencil.
16) It is recommended that a 1/16" pilot hole be drilled in the mounting surface.
17) Drive the screws provided in the mounting hardware into the mounting surface until approximately 1/8" of space remains under the head of the screw. See Figure 3.
18) Align the keyholes in the fixture with the two screws and slide into place. See Figure 4.
19) Tighten the screws and install bulb and reinsert lens.
20) Turn on the electricity at the circuit breaker or fuse box.

Figure 1 / Figura 1

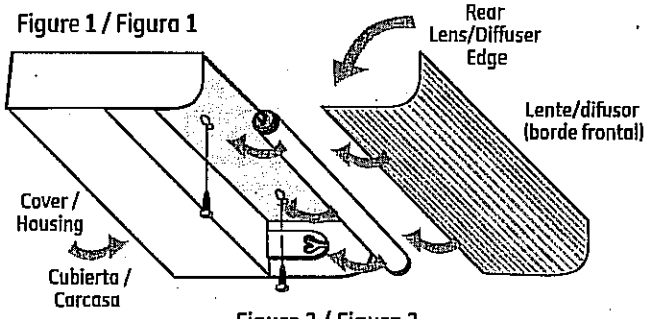

Figure 2 / Figura 2

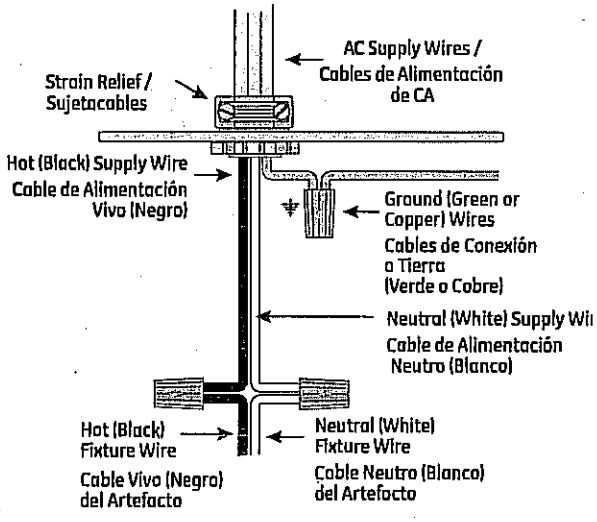

Figure 3 / Figura 3

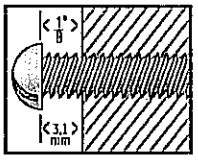

Figure 4 / Figura 4

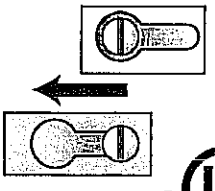

GE is a trademark of the General Electric Company and is used under license to Jasco Products Company LLC, 10 E. Memorial Rd., Oklahoma City, OK 73114. www.jascoproducts.com.

c UL us LISTED
UCF003 ES

Disposal of Electrical Equipment
European Directive 2002/96/EC (WEEE)

EN

The European directive "Waste Electrical and Electronic Equipment" (WEEE) aims to minimise the impact of electrical and electronic equipment waste on the environment and human health. To conform with this directive, electrical equipment marked with this symbol must not be disposed of in European public disposal systems. European users of electrical equipment must now return end-of-life equipment for disposal. Further information can be found on the following website: www.recyclethis.info.

CS

Cílem Evropské směrnice o odpadech z elektrických a elektronických zařízení (WEEE) je minimalizovat vliv odpadu z elektrických a elektronických zařízení na životní prostředí a lidské zdraví. Podle této směrnice, se elektrická zařízení označená tímto symbolem nesmí likvidovat v zařízeních na likvidaci komunálního odpadu. Uživatelé elektrických zařízení v Evropě musí nyní tato zařízení po skončení životnosti odevzdat k likvidaci. Další informace naleznete na následující internetové adrese: www.recyclethis.info.

DA

Det europæiske WEEE direktiv, om bortskaffelse af elektrisk og elektronisk udstyr har til formål at minimere den indvirkning, som affald af elektrisk og elektronisk udstyr har på miljøet og mennesker. I henhold til direktivet må elektrisk udstyr, der er mærket med dette symbol, ikke bortskaffes sammen med almindeligt husholdningsaffald i Europa. Europæiske brugere af elektrisk udstyr skal aflevere kasserede produkter til genbrug. Yderligere oplysninger findes på webstedet www.recyclethis.info.

DE

Das Ziel der EG-Richtlinie über Elektro- und Elektronik-Altgeräte ist, Umwelt- und Gesundheitsschäden durch Elektro- und Elektronik-Altgeräte so gering wie möglich zu halten. Um diese Richtlinie einzuhalten, dürfen Elektrogeräte, die mit diesem Symbol gekennzeichnet sind, nicht in den öffentlichen europäischen Entsorgungssystemen entsorgt werden. Europäische Benutzer von Elektrogeräten müssen ab sofort Altgeräte zur Entsorgung zurückgeben.Nähere Informationen hierzu finden Sie auf der folgenden Website: www.recyclethis.info.

EL

Η Ευρωπαϊκή οδηγία "Απόβλητα Ειδών Ηλεκτρικού και Ηλεκτρονικού Εξοπλισμού" (ΑΗΗΕ) έχει στόχο την ελαχιστοποίηση της επίδρασης των απαβλήτων ηλεκτρικού και ηλεκτρονικού εξοπλισμού στο περιβάλλον και την υγεία των ανθρώπων. Προς συμμόρφωση με αυτή την οδηγία, ο ηλεκτρικός εξοπλισμός που φέρει αυτή την ένδειξη δεν πρέπει να απορρίπτεται σε Ευρωπαϊκά δημόσια συστήματα απόρριψης. Οι Ευρωπαίοι χρήστες ηλεκτρικού εξοπλισμού πρέπει πλέον να αποθέτουν τον εξοπλισμό όταν λήξει η διάρκεια ζωής του. Μπορείτε να βρείτε περισσότερες πληροφορίες στην ακόλουθη τοποθεσία στο web: www.recyclethis.info.

ES

El objetivo de la directiva europea de Eliminación de equipos eléctricos y electrónicos (WEEE) es minimizar el impacto de la eliminación de equipos eléctricos y electrónicos sobre el medioambiente y la salud de las personas. Para cumplir con esta directiva, el equipamiento eléctrica marcado con este símbolo no deberá desecharse en ningún sistema de eliminación europeo público. Los usuarios europeos de equipamiento eléctrico deberán retornar los equipos eléctricos y electrónicos al final de su vida útil para su eliminación. Para más información visite el siguiente sitio Web: www.recyclethis.info.

ET

Euroopa direktiivi elektri- ja elektroonikaseadmete jäätmete kohta eesmärk on minimeerida elektri- ja elektroonikaseadmete jäätmete mõju keskkonnale ja inimeste tervisele. Nimetatud direktiivi alusel ei tohi käesoleva sümboliga mõrgitud elektriseadmeid kõrvaldada Euroopa avalikes kõrvaldamissüsteemides. Euroopa elektriseadmete kasutajad peavad nõõdsest vanad seadmed kõrvaldamiseks tagastama. Lisainformatsiooni saab Internetist aadressil: www.recyclethis.info.

FI

Euroopan parlamentin ja neuvoston direktiivi sähkö- ja elektroniikkalaiteromusta (WEEE), jonka tarkoitus on minimoida sähkö- ja elektroniikkalaiteromun ympäristöllisiä ja terveydellisiä haittoja. Tällä symbolilla merkittyjä elektroniikkalaitteita ei kyseisen direktiivin noudattamiseksi saa toimittaa euroappalaisiin julkisiin jätehuoltajärjestelmiin. Elektroniikkalaitteiden euroappalaisten käyttäjien täytyy palauttaa käytöstä poistetut laitteet jätteenkäsittelyä varten. Lisätietoja on sivustolla www.recyclethis.info.

FR

La directive européenne " Déchets d'Equipements Electriques et Electroniques " (DEEE) a pour but de minimiser l'impact des déchets électriques et électroniques sur l'environnement et la santé humaine. Conformément à cette directive, tout équipement électrique disposant de ce symbole ne doit pas être jeté dans les systèmes d'évacuation des déchets publics européens. Les utilisateurs européens d'équipement électrique doivent désormais renvoyer tout équipement électrique en fin de vie pour traitement. Vous trouverez de plus amples informations sur le site Web suivant : www.recyclethis.info.

HU

Az elektromos és elektronikus berendezések hulladékairól" (WEEE) szóló európai irányelv célja, hogy minimálisra csökkentse az elektromos és elektronikus berendezésekből származó hulladék környezeti is emberi egészségre gyakorolt hatását. Ezen irányelvek alapján az ilyen emblémával ellátott elektronikus berendezés Európában nem kerülhet nyilvános hulladékgyűjtő rendszerbe. Az európai felhasználó köteles az elektromos berendezést használatának megszűnte után visszaküldeni, a hulladék megfelelő kezelésére. További információ a következő weboldalon található: www.recyclethis.info.

European representative for manufacture (EMC):
GE Security B.V., Kelvinstraat 7, 6003 DH Weert, The Netherlands.
http://www.gesecurity.eu

Revision 1.2 (May 2007) • Part number 1059353
Copyright © 2007 GE Security B.V. All rights reserved

DIN Rail Receptacle
Réceptacle sur rail DIN
Recipienle para carril DIN

ITEM 216

WARNING
AVERTISSEMENT
ADVERTENCIA

To prevent electrical shock, disconnect from power source before installing or servicing.

Avant le montage et la mise en service, couper l'alimentation secteur pour éviter toute décharge.

Desconéctese de la corriente eléctrica, antes de la instalación o del servicio, a fin de impedir sacudidas eléctricas.

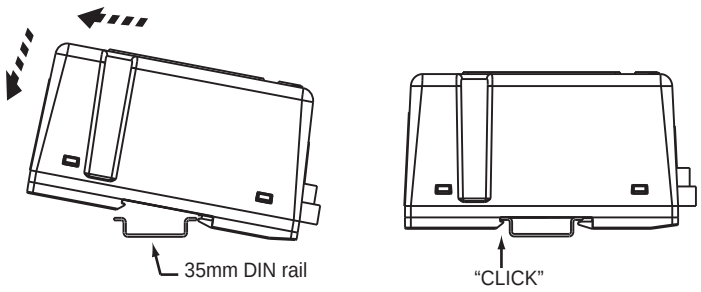

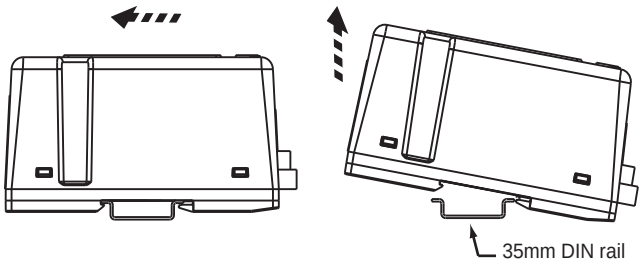

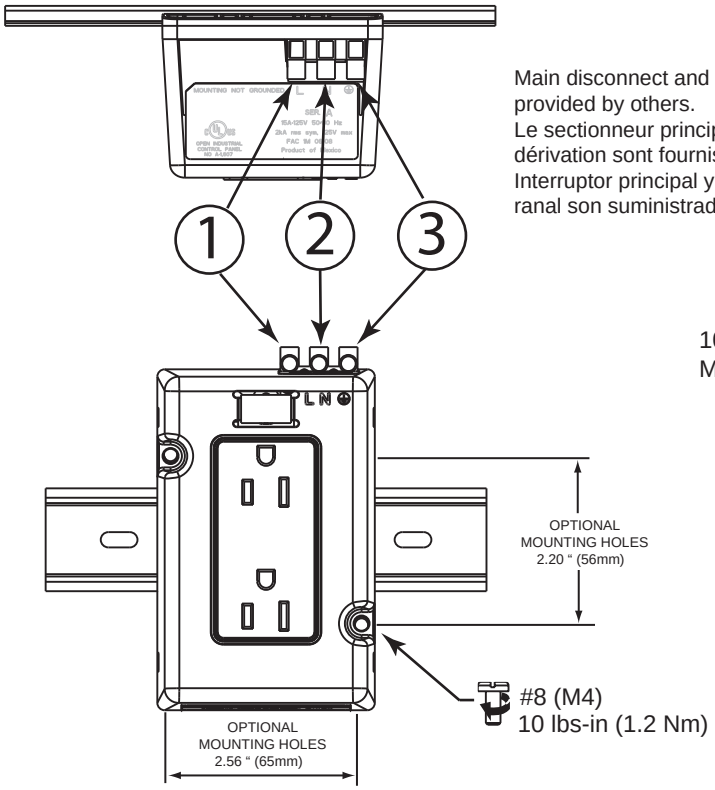

Main disconnect and branch circuit protection is provided by others.
Le sectionneur principal et la protection de dérivation sont fournis par un autre fournisseur.
Interruptor principal y proteccion del circuito ranal son suministrados por otros.

USE COPPER WIRE ONLY (60°C minimum)
UTILISER SEULEMENT DU FIL DE CUIVRE (minimum 60°C)
SOLO USAR ALAMBRE DE COBRE (60°C minimo)

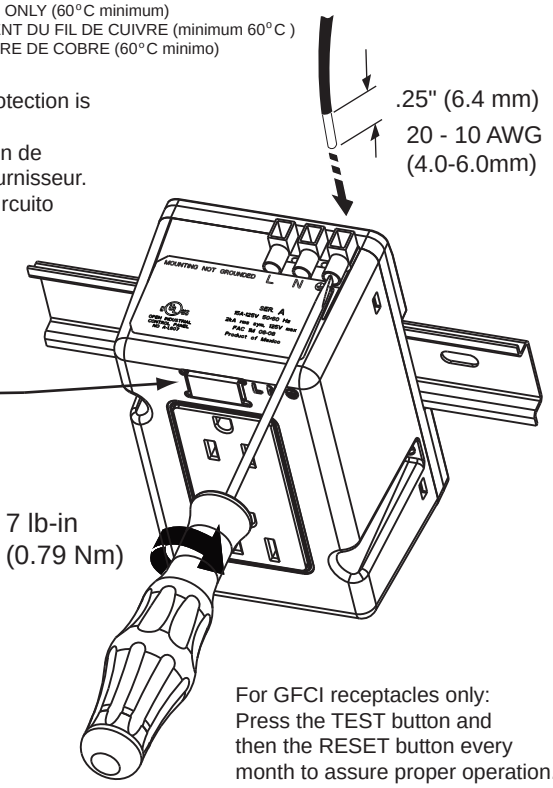

For GFCI receptacles only:
Press the TEST button and then the RESET button every month to assure proper operation. If the GFCI can not be reset, it must be replaced.

Pour une prise 'DDFT' seulement:
Appuyer sur le bouton 'TEST' et ensuite sur le bouton 'RESET' tous les mois pour s'assurer d'une bonne fonctionnalité. Si le 'DDFT' ne peut être réarmé il doit être remplacé.

Para receptáculos CGFI solamente:
Presione el botón TEST y después presione el botón RESET cada mes para asegurar una operación correcta. Si el CGFI no puede reestablecerse, debe ser reemplazado.

INSTALLATION INSTRUCTIONS
NOTICE DE MONTAGE
INSTRUCCIONES DE INSTALACION

1. CONNECT BLACK WIRE TO TERMINAL BLOCK MARKED L
   RACCORDER LE FIL NOIR AU BORNIER IDENTIFIE PAR LA LETTRE
   CONECTAR EL CABLE NEGRO CON EL BLOQUE DI BORNE MARCADO L

2. WHITE WIRE TO TERMINAL MARKED N
   RACCORDER LE FIL BLANC A LA BORNE
   CONECTAR EL CABLE BLANCO CON EL BORNE MARCADO

3. GREEN OR BARE WIRE TO TERMINAL MARKED WITH ⏚
   RECEPTACLE IS NOT GROUNDED UNLESS GREEN OR BARE WIRE IS CONNECTED
   RACCORDER LE FIL VERT ORNU ALA BORNE PORTANT LE SYMBOLE ⏚
   LE PRISE N'EST PAS MISE À LA TERRE À MOINS QU'UN FIL VERT OU DÉNUDÉ SOIT RACCORDÉ.
   CONECTAR EL CABLE VERDE O DESNUDO CON EL BORNE MARCADO CON EL SIMBOLO ⏚
   RECEPTÁCULO NO ESTA PUESTO A TIERRA A MENOS DE QUE EL CABLE VERDE O EL CABLE DESNUDO ESTÉ CONECTADO.

(PN-43467)

Extract from the online catalog

SD-US/SC/LA/GY

Order No.: 2963860

http://eshop.phoenixcontact.de/phoenix/treeViewClick.do?UID=2963860

Rail-mountable socket, with light indicator, housing color: gray, with screw connection, national version: USA, housing width 45 mm

Commercial data	
GTIN (EAN)	4017918859138
sales group	H070
Pack	10 pcs.
Customs tariff	85366990
Weight/Piece	0.07641 KG
Catalog page information	Page 603 (IF-2009)

Product notes

WEEE/RoHS-compliant since: 07/20/2006

http://www.download.phoenixcontact.com Please note that the data given here has been taken from the online catalog. For comprehensive information and data, please refer to the user documentation. The General Terms and Conditions of Use apply to Internet downloads.

Technical data

General data

Nominal voltage U_N	125 V AC
Nominal current I_N	15 A AC
Status display	Glow lamp or LED with preresistor
Contact material	CuZn37
For country-specific use in	USA

Color	gray
Insulating material	PA
Ambient temperature (operation)	-20 °C ... 60 °C
Ambient temperature (storage/transport)	-20 °C ... 60 °C
Standards/regulations	IEC 83
	DIN 49440-1
	UL 498
Width	45 mm
Height	70.5 mm
Depth	75 mm

Connection data	
Conductor cross section solid min.	0.2 mm²
Conductor cross section solid max.	4 mm²
Conductor cross section stranded min.	0.2 mm²
Conductor cross section stranded max.	2.5 mm²
Conductor cross section AWG/kcmil min.	30
Conductor cross section AWG/kcmil max	12
Type of connection	Screw connection
Stripping length	8 mm
Screw thread	M3

Product Data Sheet

60112

ITEM 300

Miniature Circuit Breaker , 15A, 1-Pole, 5kA@240VAC - 10kA@120VAC

SQUARE D by Schneider Electric

List Price $114.00 USD

Availability **Stock Item: This item is normally stocked in our distribution facility.**

Technical Characteristics

Ampere Rating	15A
General Application	Short circuit and overcurrent protection
For Use With	OEM Panels and Enclosures
Voltage Rating	120VAC - 60VDC
Switching Duty Rated	Yes
Terminal Type	Line: Box Lug - Load: Box Lug
HACR Rated	Yes
Mounting Type	Flush, Surface or DIN Rail (35mm)
Weight	4.40 Ounces
Approvals	UL489 Listed - CSA 22.2 #5.1 Certified - IEC Rated 60947-2
Number of Poles	1-Pole
Enclosure Rating	IP40
Marketing Trade Name	Multi 9
Short Circuit Current Rating	5kA@240VAC - 10kA@120VAC
Circuit Breaker Type	Standard
Type	C60N
Wire Size	#18 to #4 AWG
Height	4.21 Inches (107mm)
Depth	3.00 Inches (76mm)
Trip Curve	C Curve - Magnetic operates between 7 to 10 times
Width	0.71 Inches (18mm)

Shipping and Ordering

Category	00915 -
Discount Schedule	DE2
GTIN	00785901208402
Package Quantity	1
Weight	0.29 lbs.
Availability Code	Stock Item: This item is normally stocked in our distribution facility.
Returnability	Y
Country of Origin	FR

Generated: 07/09/2010 12:17:34

© 2010 Schneider Electric. All rights reserved.

As standards, specifications, and designs change from time to time, please ask for confirmation of the information given in this document.

© 2010 Schneider Electric. All rights reserved.

Product Data Sheet

60110

ITEM 301

Miniature Circuit Breaker , 10A, 1-Pole, 5kA@240VAC - 10kA@120VAC

SQUARE D by Schneider Electric

List Price $114.00 USD

Availability **Stock Item: This item is normally stocked in our distribution facility.**

Technical Characteristics

Ampere Rating	10A
General Application	Short circuit and overcurrent protection
For Use With	OEM Panels and Enclosures
Voltage Rating	120VAC - 60VDC
Short Circuit Current Rating	5kA@240VAC - 10kA@120VAC
Circuit Breaker Type	Standard
Mounting Type	Flush, Surface or DIN Rail (35mm)
HACR Rated	Yes
Weight	4.40 Ounces
Number of Poles	1-Pole
Marketing Trade Name	Multi 9
Approvals	UL489 Listed - CSA 22.2 #5.1 Certified - IEC Rated 60947-2
Enclosure Rating	IP40
Trip Curve	C Curve - Magnetic operates between 7 to 10 times
Depth	3.00 Inches (76mm)
Type	C60N
Terminal Type	Line: Box Lug - Load: Box Lug
Wire Size	#18 to #4 AWG
Height	4.21 Inches (107mm)
Width	0.71 Inches (18mm)

Shipping and Ordering

Category	00915 -
Discount Schedule	DE2
GTIN	00785901208396
Package Quantity	1
Weight	0.29 lbs.
Availability Code	Stock Item: This item is normally stocked in our distribution facility.
Returnability	Y
Country of Origin	FR

As standards, specifications, and designs change from time to time, please ask for confirmation of the information given in this document.

Generated: 07/09/2010 12:23:00

© 2010 Schneider Electric. All rights reserved.

ITEM 324

Safety Instructions

Liebert GXT3 UPS 120V/208V

EMERSON™
Network Power

WARNING

Observe all cautions and warnings in this manual. Failure to do so may result in serious injury or death.
Refer all UPS and battery service to properly trained and qualified service personnel. Do not attempt to service this product yourself.
Opening or removing the cover may expose you to lethal voltages within this unit even when it is apparently not operating and the input wiring is disconnected from the electrical source. Never work alone.

SAVE THESE INSTRUCTIONS

This manual contains important safety instructions that must be followed during the installation and maintenance of the UPS and batteries. Read this manual thoroughly before attempting to install or operate this UPS.

UPS Safety Notes

The UPS contains no user-serviceable parts except the internal battery pack. Do not remove the cover. Removing the cover may result in electric shock and will invalidate any implied warranty. The UPS has an internal battery, so the output receptacles of the UPS may carry live voltage even if the UPS is not connected to mains input power.
Before moving or rewiring the UPS, disconnect mains input power and the battery and make sure that the UPS is completely shut down. Otherwise, the output terminal may carry live voltage, presenting an electric shock hazard. To ensure human safety and normal UPS operation, the UPS must be properly grounded before use. When the UPS is connected to an IT power distribution system, the short-circuit protection device must be installed on the neutral line. Install and use the UPS in the following environments:

- Temperature: 0°C to 40°C (32-104°F); relative humidity: 0% to 95%)
- Out of direct sunlight
- Away from heat source
- Stable surface, not subject to vibrations or shocks
- Away from dust and other particulates
- Away from corrosive substances, salts and flammable gases

Keep the air inlet and outlet of the UPS unobstructed. Poor ventilation will increase the UPS internal temperature and can shorten the life of the UPS and its batteries.
Keep liquid and other foreign objects away from the UPS.
In case of fire, use a dry chemical fire extinguisher to put out the fire. Using a fluid fire extinguisher may cause electric shock.
This UPS is not intended for use with life support and other designated critical devices. Maximum load must not exceed that shown on the UPS rating label. This UPS is designed for data processing equipment. If uncertain, consult your local dealer or Emerson representative.

Battery Safety

ELECTROMAGNETIC COMPATIBILITY - The Liebert GXT3 series complies with the limits for a Class A digital device. Operating this device in a residential area is likely to cause harmful interference that users must correct at their own expense. The Liebert GXT3 series complies with the requirements of EMC Directive 2004/108/EC and the published technical standards. Continued compliance requires installation in accordance with these instructions and use of accessories approved by Emerson.

CAUTION

Do not dispose of the battery in a fire. The battery may explode. Do not open or damage the battery.
Released electrolyte is harmful to skin and eyes. If electrolyte comes into contact with the skin, wash the affected area immediately with plenty of clean water and get medical attention.

CAUTION

A battery can present a risk of electrical shock and high short-circuit current. The following precautions should be observed when working on batteries:

- Remove watches, rings and other metal objects.
- Use tools with insulated handles.
- Wear rubber gloves and boots.
- Do not lay tools or metal parts on top of batteries.
- Disconnect charging source prior to connecting or disconnecting battery terminals.
- Determine if the battery is inadvertently grounded. If it is inadvertently grounded, remove the source of the ground. Contact with any part of a grounded battery can result in electrical shock. The likelihood of such shock will be reduced if grounds are removed during installation and maintenance (applicable to a UPS and a remote battery supply not having a grounded supply circuit).

Information for the Protection of the Environment
UPS SERVICING - This UPS makes use of components dangerous for the environment (electronic cards, electronic components). The components removed must be taken to specialized collection and disposal centers.

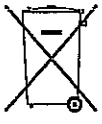

NOTICE TO EUROPEAN UNION CUSTOMERS: DISPOSAL OF OLD APPLIANCES - This product has been supplied from an environmentally aware manufacturer that complies with the Waste Electrical and Electronic Equipment (WEEE) Directive 2002/96/CE. The "crossed-out wheelie bin" symbol at right is placed on this product to encourage you to recycle wherever possible. Please be environmentally responsible and recycle this product through your recycling facility at its end of life. Do not dispose of this product as unsorted municipal waste. Follow local municipal waste ordinances for proper disposal provisions to reduce the environmental impact of waste electrical and electronic equipment (WEEE).
For information regarding the scrapping of this equipment, please browse **http://www.eu.emersonnetworkpower.com** ("Products session" or "Contact us" session) or call our worldwide technical support.

- Toll Free: 00 80011554499
- Toll Number Based in Italy: +39 0298250222

ITEM 324

AC Power
For *Business-Critical Continuity™*

Liebert® GXT3™ UPS 120V/208V 500VA-3000VA

User Manual

EMERSON
Network Power

TABLE OF CONTENTS

IMPORTANT SAFETY PRECAUTIONS 1

SAVE THESE INSTRUCTIONS 1

GLOSSARY OF SYMBOLS 3

1.0 PRODUCT DESCRIPTION 4

1.1 Features 4

1.2 Available Models 4

1.3 Appearance and Components 4

1.3.1 Front Panel and Controls 4

1.3.2 Rear Panel Features 5

1.4 Major Components 8

1.5 Operating Mode 9

1.5.1 Utility (AC) Mode 9

1.5.2 Manual Bypass Mode 9

1.5.3 Battery Mode 10

1.5.4 Battery Recharge Mode 10

1.5.5 Frequency Converter Mode 10

2.0 INSTALLATION 11

2.1 Unpacking and Inspection 11

2.2 What's Included 11

2.3 Preparation for Installation 11

2.3.1 Installation Environment 11

2.4 Mechanical Installation 11

2.4.1 Tower Installation 12

2.4.2 Rack Installation 14

2.5 Cable Connection 17

2.5.1 Connecting Input Plug and Loads 17

2.5.2 Connecting Battery Cables 17

2.6 Connecting Communication Cables 18

2.6.1 Connecting USB Communication Cables 18

2.6.2 Installing the Optional Liebert IntelliSlot Card and Communication Cables 18

3.0 CONTROLS AND INDICATORS 19

3.1 Control Buttons 19

3.1.1 On/Alarm Silence/Manual Battery Test Button 19

3.1.2 Standby/Manual Bypass Button 19

3.2 Indicators 20

3.2.1 Level Indicators 20

3.2.2 UPS Status Indicators 21

4.0 OPERATION 22
4.1 Startup Checklist for the Liebert GXT3 22
4.2 Starting the UPS 22
4.3 Manual Battery Test 22
4.4 Manual Bypass 22
4.5 Shut Down the Liebert GXT3 22
4.6 Disconnecting Input Power from the Liebert GXT3 23
5.0 COMMUNICATION 24
5.1 Liebert IntelliSlot Communication Cards 24
5.1.1 Liebert MultiLink 24
5.2 USB Port Communication 25
5.2.1 Configuration Program 25
5.3 Terminal Block Communication 26
5.3.1 Any-Mode Shutdown 26
5.3.2 Battery Mode Shutdown 27
5.3.3 On Battery 27
5.3.4 Low Battery 27
6.0 MAINTENANCE 28
6.1 Replacing the Internal Battery Pack 28
6.1.1 Battery Replacement Procedures 28
6.2 Battery Charging 29
6.3 Precautions 30
6.4 Checking UPS Status 30
6.5 Checking UPS Functions 30
7.0 TROUBLESHOOTING 31
7.1 UPS Symptoms 31
7.1.1 Indicators 31
7.1.2 Audible Alarm 32
7.2 Troubleshooting 32
8.0 BATTERY CABINET 34
9.0 SPECIFICATIONS 35
9.1 Product Warranty Registration 39

FIGURES

Figure 1 Liebert GXT3 rack/tower models—front view 5
Figure 2 Liebert GXT3 minitower—front view 5
Figure 3 Liebert GXT3 120V rack/tower models—rear panel components 6
Figure 4 Liebert GXT3 208V rack/tower models—rear panel components 7
Figure 5 Liebert GXT3-1000MT120—rear panel components 7
Figure 6 Operating principle diagram 8
Figure 7 Support bases 12
Figure 8 Remove the front plastic bezel cover 12
Figure 9 Rotate the operation and display panel 12
Figure 10 Tower installation 13
Figure 11 Pulling inner member from each bracket assembly 14
Figure 12 Installing rear member of each bracket assembly 14
Figure 13 Installing front member of each bracket assembly 15
Figure 14 Fastening rear member and front member together 15
Figure 15 Installing inner members 15
Figure 16 Installing ears 16
Figure 17 Insert the UPS. 16
Figure 18 Operation and display panel 19
Figure 19 Battery level indicators. 20
Figure 20 Load level indicators 20
Figure 21 Terminal block layout 26
Figure 22 Removing the front bezel cover and battery door 28
Figure 23 Disconnecting the battery plug and battery receptacle (front view) 28
Figure 24 Pull out the battery 29
Figure 25 Battery level indicator 31
Figure 26 Battery cabinet. 34

TABLES

Table 1 UPS models, power ratings 4
Table 2 Input circuit breaker specification 17
Table 3 Functions of On/Alarm Silence/Manual battery test button 19
Table 4 Functions of Standby/Manual Bypass button 19
Table 5 UPS status indicators 21
Table 6 Output voltage option 25
Table 7 Indicator descriptions 31
Table 8 Audible alarm description 32
Table 9 Troubleshooting 32
Table 10 Specifications of GXT3-500RT120 - GXT3-1000RT120 and GXT3-1000MT120 UPS 35
Table 11 Specifications of GXT3-1500RT120 - GXT3-3000RT120 and GXT3-3000RT208 UPS 36
Table 12 Operating temperature parameters 37
Table 13 Battery cabinet specifications 37
Table 14 Battery run times 38

WARNING

Observe all cautions and warnings in this manual. Failure to do so may result in serious injury or death.

Refer all UPS and battery service to properly trained and qualified service personnel. Do not attempt to service this product yourself.

Opening or removing the cover may expose you to lethal voltages within this unit even when it is apparently not operating and the input wiring is disconnected from the electrical source.

Never work alone.

SAVE THESE INSTRUCTIONS

This manual contains important safety instructions that must be followed during the installation and maintenance of the UPS and batteries. Read this manual thoroughly before attempting to install or operate this UPS.

This UPS contains no user-serviceable parts except the internal battery pack. The Off/Bypass push button does not electrically isolate internal parts. Under no circumstances attempt to gain internal access other than to replace the batteries due to risk of electric shock or burn. Do not continue to use the UPS if the front panel indications are not in accordance with these operating instructions or if the UPS performance alters in use. Refer all faults to your local dealer, Emerson Network Power representative or Emerson Network Power Channel Support.

This UPS has an internal battery, and the output receptacles of the UPS may carry live voltage even if the UPS is not connected to utility input power.

Before moving or rewiring this UPS, disconnect utility input power and the battery and make sure that the UPS is completely shut down. Otherwise, the output terminal may carry live voltage, presenting an electric shock hazard.

To ensure human safety and normal UPS operation, the UPS must be properly grounded before use.

When the UPS is connected to an IT power distribution system, a short-circuit protection device must be installed on the neutral line.

Install and use the Liebert GXT3 in the following environments:

- 32°F - 104°F (0°C - 40°C), relative humidity: 0% ~ 95% non-condensing
- Out of direct sunlight
- Away from heat sources
- Stable surface, not subject to vibrations or shocks
- Away from dust and other particulates
- Away from corrosive substances, salts and flammable gases

Keep the air inlet and outlet of this UPS unobstructed. Poor ventilation will increase the internal temperature of the UPS and can adversely affect the UPS and its batteries.

Keep liquid and foreign objects away from the UPS.

In case of fire, use a dry chemical fire extinguisher to put out the fire. Using a fluid fire extinguisher may cause electric shock.

This UPS is not intended for use with life support and other designated critical devices. Maximum load must not exceed that shown on the UPS rating label. This UPS is designed for data processing equipment. If uncertain, consult your local dealer or Emerson representative.

Battery Safety Notes

CAUTION

Do not dispose of batteries in a fire. The batteries may explode.

Do not open or mutilate the batteries. Released electrolyte is toxic and is harmful to skin and eyes.

CAUTION

A battery can present a risk of electrical shock and high short circuit current. The following precautions should be observed when working on batteries:

- Remove watches, rings and other metal objects.
- Use tools with insulated handles.
- Wear rubber gloves and boots.
- Do not lay tools or metal parts on top of batteries.
- Disconnect charging source prior to connecting or disconnecting battery terminals.
- Determine if the battery is inadvertently grounded. If it is inadvertently grounded, remove the source of the ground. Contact with any part of a grounded battery can result in electrical shock. The likelihood of such shock will be reduced if grounds are removed during installation and maintenance (applicable to a UPS and a remote battery supply not having a grounded supply circuit).

ELECTROMAGNETIC COMPATIBILITY—The Liebert GXT3 complies with the limits for a CLASS A DIGITAL DEVICE, PURSUANT TO Part 15 of FCC rules. Operation is subject to the following two conditions: (1) This device may not cause harmful interference and (2) this device must accept any interference received, including interference that may cause undesired operation. Operating this device in a residential area is likely to cause harmful interference that users must correct at their own expense.

The Liebert GXT3 series complies with the requirements of EMC Directive 2004/108/EC and the published technical standards. Continued compliance requires installation in accordance with these instructions and use of accessories approved by Emerson.

Information for the Protection of the Environment

UPS Servicing: UPS makes use of components dangerous for the environment (electronic cards, electronic components). The components removed must be taken to specialized collection and disposal centers.

GLOSSARY OF SYMBOLS

	Risk of electrical shock
	Indicates caution followed by important instructions
	AC input
	AC output
	Requests the user to consult the manual
PbH2SO4	**Indicates the unit contains a valve-regulated lead acid battery**
R	**Recycle**
	DC voltage
	Equipment grounding conductor
	Bonded to ground
	AC voltage
	ON/Alarm Silence/Battery Test
	OFF/Bypass
	WEEE

1.0 PRODUCT DESCRIPTION

The Liebert GXT3 is a compact, online uninterruptible power system (UPS) that continuously conditions and regulates its output voltage. The Liebert GXT3 is designed to supply microcomputers and other sensitive equipment with clean sine wave input power.

Upon generation, AC power is clean and stable. However, during transmission and distribution it is subject to voltage sags, spikes and complete failure that may interrupt computer operations, cause data loss and damage equipment.

The Liebert GXT3 protects equipment from these disturbances. The Liebert GXT3 continuously charges its batteries from utility power, enabling it to supply power to connected loads, even when utility power fails.

This sections describes the UPS, its features, models, appearance and components, operating principles and operating mode.

1.1 Features

- Intelligent battery management to extend the battery life
- Operation and display panel with LED for monitoring load percentage and battery capacity independently
- Flexible network management with Liebert MultiLink™ software
- Fan fault self-inspection and automated diagnostic function
- Intelligent fan operation, automatically changing rotation speed depending on system requirements, to decrease power consumption and noise
- Input circuit breaker to ease recovery from overloads
- Safety approval from UL and cUL
- Communication options: USB port, Liebert IntelliSlot® port and terminal block communication
- Dry contacts for remote monitoring
- Input power factor greater than 0.99
- Output voltage selection function

1.2 Available Models

Eight UPS models are available.

Table 1 UPS models, power ratings

Model	Nominal Power Rating
GXT3-500RT120	500VA/450W
GXT3-700RT120	700VA/630W
GXT3-1000RT120	1000VA/900W
GXT3-1000MT120	1000VA/900W, minitower
GXT3-1500RT120	1500VA/1350W
GXT3-2000RT120	2000VA/1800W
GXT3-3000RT120	3000VA/2700W
GXT3-3000RT208	3000VA/2700W

1.3 Appearance and Components

1.3.1 Front Panel and Controls

The Liebert GXT3 rack/tower and minitower models in various power ratings have the same general appearance, controls and features (see **Figure 1**). The various rack/tower and minitower models differ largely in the type of receptacles each has.

Figure 1 Liebert GXT3 rack/tower models—front view

The Liebert GXT3-1000MT120 has the same controls and features in a minitower arrangement (see **Figure 2**).

Figure 2 Liebert GXT3 minitower—front view

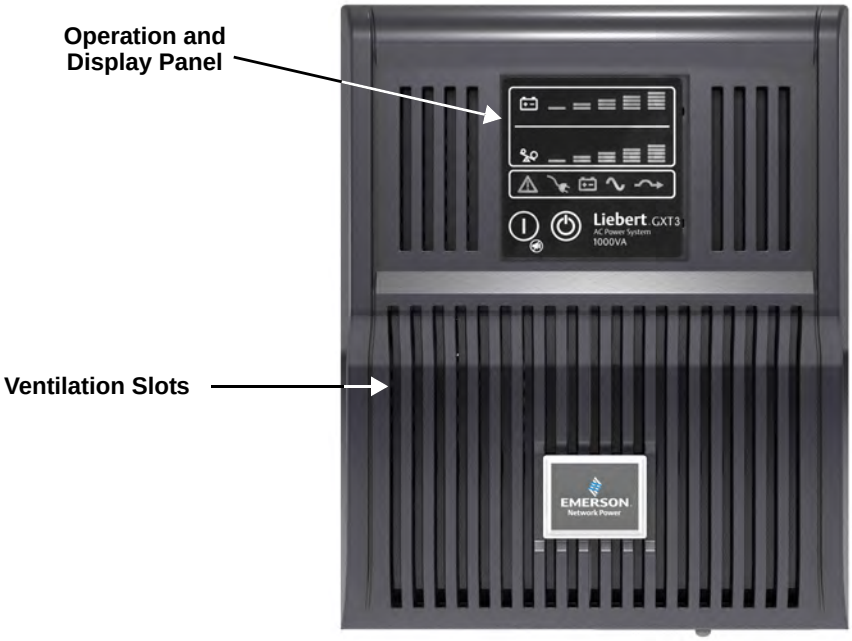

1.3.2 Rear Panel Features

The rear panel of the Liebert GXT3 has these features:

- USB port
- Cooling fan
- Power output receptacles
- Input circuit breaker
- Liebert IntelliSlot port
- Communication terminal block
- Input power cable

Figure 3 Liebert GXT3 120V rack/tower models—rear panel components

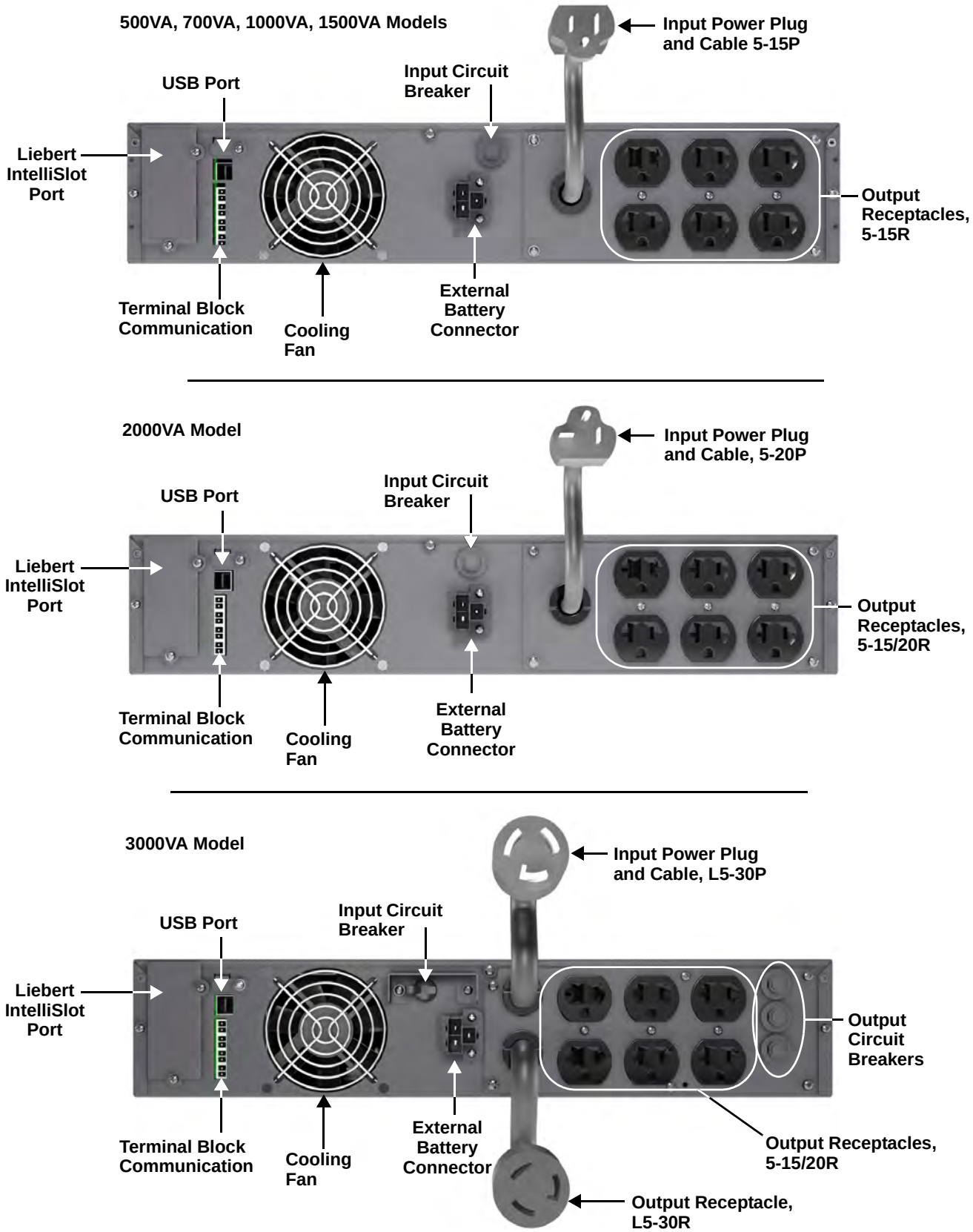

Figure 4 Liebert GXT3 208V rack/tower models—rear panel components

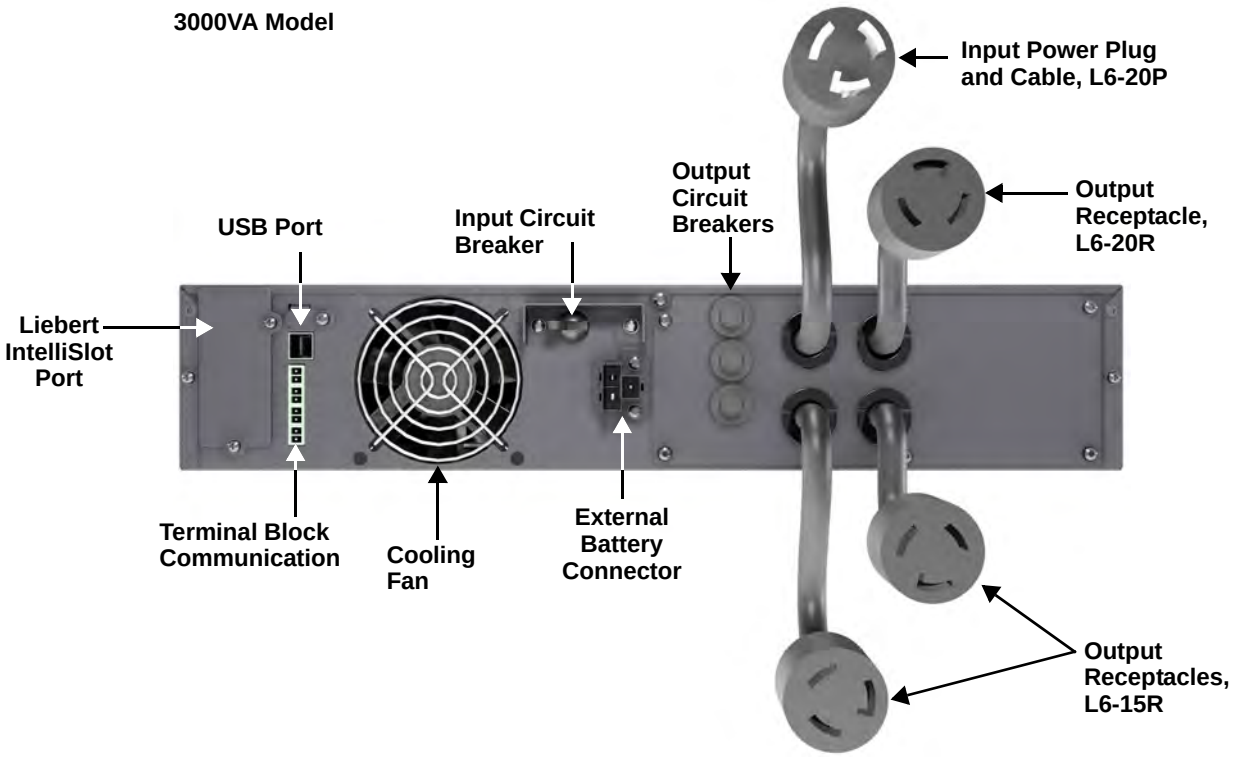

Figure 5 Liebert GXT3-1000MT120—rear panel components

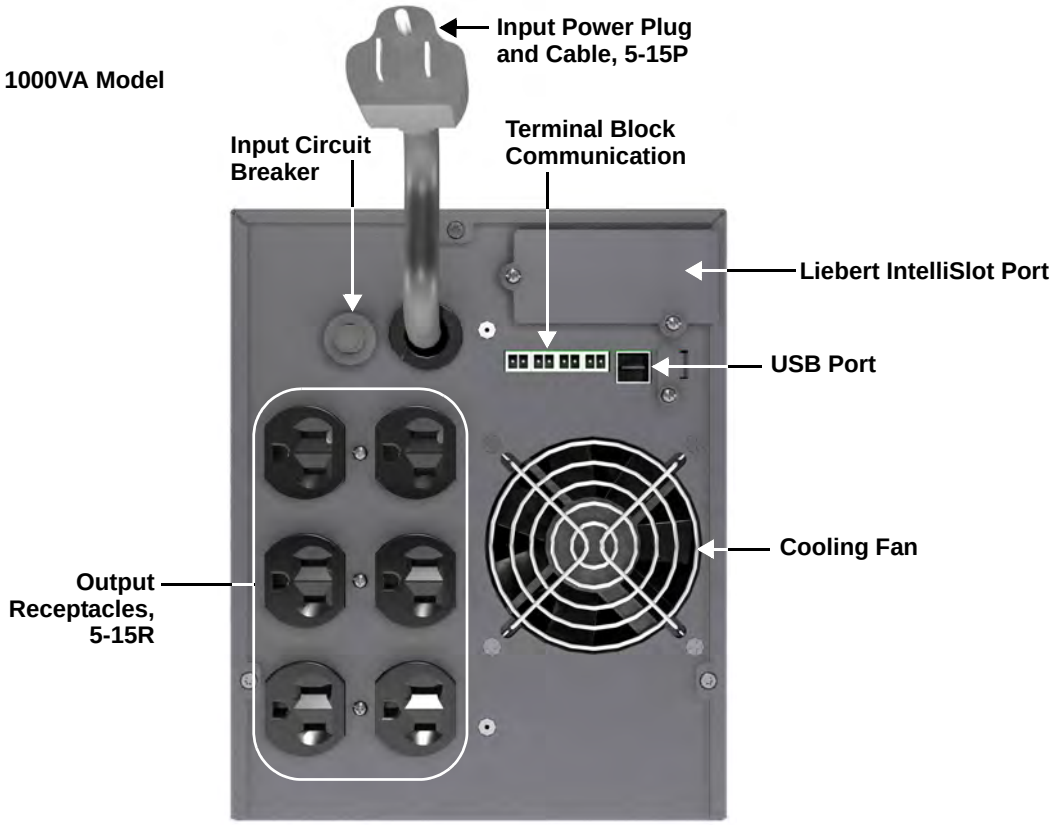

1.4 Major Components

The operating principle of the UPS is illustrated in **Figure 6**.

Figure 6 Operating principle diagram

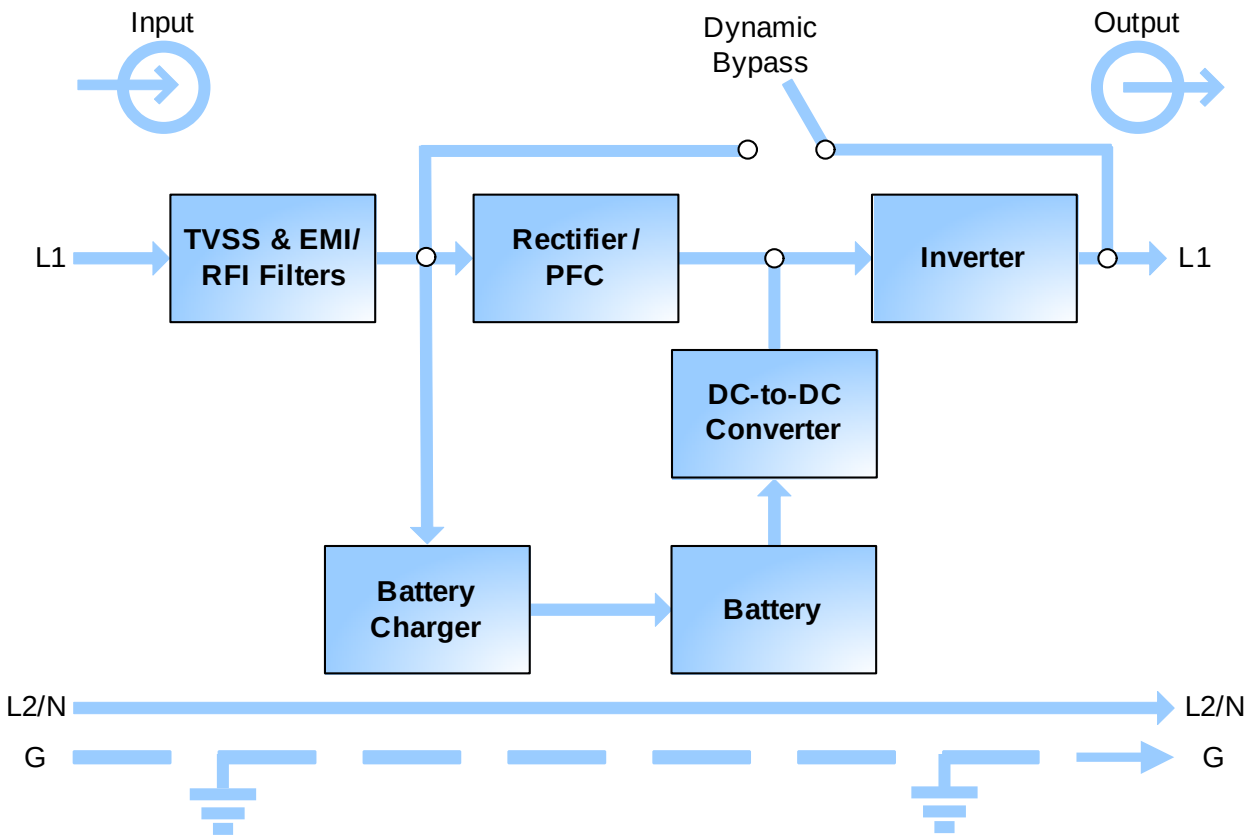

The UPS is composed of utility input, TVSS and EMI/RFI filters, rectifier/PFC, inverter, battery charger, DC-to-DC converter, battery, dynamic bypass and UPS output.

Transient Voltage Surge Suppression (TVSS) and EMI/RFI Filters

The Liebert GXT3 has surge protection and filters that protect the connected load from power surges, electromagnetic interference (EMI) and radio frequency interference (RFI). These features can minimize any surges or interference present in the utility power. The filters also prevent surges or interference generated by the UPS from adversely affecting devices connected on the same branch as the UPS.

Rectifier/Power Factor Correction (PFC) Circuit

In normal operation, the Liebert GXT3's rectifier/power factor correction (PFC) circuit converts utility power to regulated DC power for use by the inverter while ensuring that the wave shape of the input current used by the UPS is near ideal. Extracting this sinewave input current achieves two objectives:

- Efficient power use by the UPS
- Reduced reflected harmonics

This results in cleaner power being available to other devices in the building not being protected by the Liebert GXT3.

Inverter

In normal operation, the Liebert GXT3's inverter utilizes the DC output of the PFC to produce precise, regulated sine wave AC power. When utility power fails, the inverter receives DC power from the DC-to-DC Converter. In either operation mode, the UPS inverter is online, continuously generating clean, precise, regulated AC output power.

Battery Charger

The battery charger utilizes energy from the utility power and precisely regulates it to continuously float charge the batteries. The batteries are being charged whenever the Liebert GXT3 is plugged in, even when the UPS is not turned On.

DC-to-DC Converter

The DC-to-DC converter raises the DC voltage from the battery to the optimum operating voltage for the inverter. This allows the inverter to operate continuously at its optimum efficiency and voltage, thus increasing reliability.

Battery

The Liebert GXT3 uses valve-regulated, nonspillable, lead acid batteries. To maintain battery design life, operate the Liebert GXT3 in an ambient temperature of 32°F to 77°F (0°C to 25°C).

Optional external battery cabinets are available to extend battery run times.

Dynamic Bypass

The Liebert GXT3 provides an alternate path for utility power to the connected loads in the unlikely event of a UPS malfunction. Should the Liebert GXT3 have an overload, overtemperature or UPS failure condition, the UPS automatically transfers the connected loads to bypass.

NOTE
The bypass power path does not protect the connected loads from disturbances on the utility.

1.5 Operating Mode

The UPS operation modes include: Utility (AC) mode, bypass mode, battery mode, battery recharge mode and frequency converter mode.

For the descriptions of indicators and control buttons in this section, refer to **3.0 - Controls and Indicators**.

1.5.1 Utility (AC) Mode

During Utility (AC) Mode, utility power provides energy to the Liebert GXT3. The filters, PFC circuit and the inverter process this power to provide computer-grade power to connected loads. Meanwhile, the UPS maintains the batteries in a fully charged state.

1.5.2 Manual Bypass Mode

Manual Bypass Mode occurs when the Standby/Manual bypass button is pressed once while the Liebert GXT3 is in Utility (AC) Mode. Bypass operation is indicated by an audible alarm and illuminated amber bypass indicator (If other indicators are illuminated, refer to **7.0 - Troubleshooting**). During manual bypass mode, utility power bypasses the inverter and provides energy to the connected load.

CAUTION
Turning Off the UPS in bypass mode will result in loss of output power and dropped loads.

1.5.3 Battery Mode

The Liebert GXT3 enters Battery Mode when utility power fails or is outside acceptable values. The battery system supplies power through the DC-to-DC converter to the inverter to generate clean AC power for the connected loads.

When the Liebert GXT3 enters Battery Mode, the UPS sounds a half-second beep at 10-second intervals. When approximately 2 minutes of run time remains, the beeps sound every 5 seconds to warn that the battery is getting low (this Low Battery Warning is user-configurable).

In Battery Mode, the AC Input indicator goes off and the Battery Level indicators illuminate. Each battery level indicator represents a 20% capacity level. As capacity decreases, fewer indicators remain illuminated. Refer to **7.0 - Troubleshooting**.

For approximate battery run times, refer to **9.0 - Specifications**. The times in **Table 14** are approximate. They are based on resistive load and an ambient temperature of 77°F (25°C). To increase this time, turn Off non-essential loads (such as idle computers and monitors) or add optional external battery cabinets.

CAUTION

Turning Off the Liebert GXT3 when it is in Battery Mode will result in loss of output power. If the UPS is turned Off manually, it must be manually restarted after utility power returns. If the UPS is turned Off by a communication signal or because the batteries are depleted, it will operate as selected in the configuration program for Auto-Restart (Refer to **5.2.1 - Configuration Program**).

1.5.4 Battery Recharge Mode

Once utility power is applied to the Liebert GXT3, the Battery Charger begins charging the batteries.

1.5.5 Frequency Converter Mode

All models of the Liebert GXT3 are capable of frequency conversion. Frequency Conversion Mode can be selected using the configuration program. Allowable frequency operating modes include:

- Auto Sensing - 50Hz or 60Hz – Bypass Enabled
- Auto Sensing - 50Hz or 60Hz – Bypass Disabled
- Frequency Converter - 50Hz – Bypass Disabled
- Frequency Converter - 60Hz – Bypass Disabled

The default for all models of the Liebert GXT3 is “Auto Sensing - 50Hz or 60Hz – Bypass Enabled.”

2.0 INSTALLATION

2.1 Unpacking and Inspection

Unpack the UPS and conduct the following checks:

- Inspect the UPS for shipping damage. If any shipping damage is found, report it to the carrier and your local dealer or your Emerson representative immediately.
- Check the accessories included in packaging list. If there is any discrepancy, contact your local dealer or your Emerson representative immediately.

2.2 What's Included

With GXT3 UPS

- Compact Disk with:
  - Liebert MultiLink
  - Configuration Program
  - User Manual
- USB Cable: one, 6-1/2 ft. (2m) long
- Mounting hardware, including screws and handles
- Plastic tower stand sets: 2 (four pieces)
- Warnings, Safety Instructions booklet and WEEE recycling sheet (ISO 14001 compliance)

NOTE
The GXT3 External Battery Cabinet shipping package includes one battery cabinet, two spacers for tower configuration and one DC power cable.

2.3 Preparation for Installation

2.3.1 Installation Environment

- Install the UPS indoors in a controlled environment, where it cannot be accidentally turned Off. The installation environment should meet the specifications listed in **9.0 - Specifications**).
- Place it in an area of unrestricted airflow around the unit, away from water, flammable liquids, gases, corrosives, and conductive contaminants. Avoid direct sunlight.

NOTE
Operating the Liebert GXT3 in temperatures above 77°F (25°C) reduces battery life.

Installation Clearances

Maintain at least 4 inches (100mm) clearance in the front and rear of the Liebert GXT3. Do not obstruct the air inlets on the front panel and rear panel of the UPS; blocking the air inlets reduces ventilation and heat dissipation, shortening the service life of the Liebert GXT3.

2.4 Mechanical Installation

The Liebert GXT3 may be installed as a tower or in a rack, depending on space and use considerations. The Liebert GXT3 may be used alone, as a single UPS, or with up to four battery cabinets.

NOTE
When installing the UPS or making input and output connections, comply with all relevant safety codes and standards

2.4.1 Tower Installation

To install the Liebert GXT3 as a tower:

1. Take out support bases from the accessories (see **Figure 7**).

Figure 7 Support bases

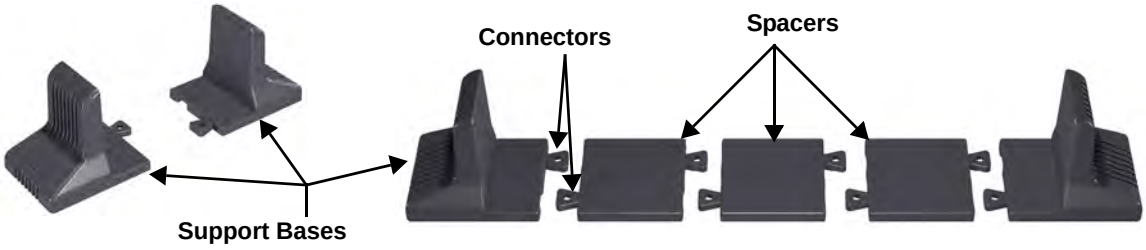

2. If optional Liebert external battery cabinets will be connected to the Liebert GXT3, take out the spacers shipped with the battery cabinet.
3. Connect the spacers and the support bases as shown in **Figure 7**. Each Liebert GXT3 needs two assembled support bases, one in the front and one in the rear.
4. Adjust the direction of the operation and display panel and logo on the Liebert GXT3.
   a. Remove the front plastic bezel cover as shown in **Figure 8**.

Figure 8 Remove the front plastic bezel cover

   b. Pull the operation and display panel gently, rotate it 90 degrees clockwise and snap it back into position, as shown in **Figure 9**.

Figure 9 Rotate the operation and display panel

   c. Pull the logo on the front plastic bezel cover gently, rotate it 90 degrees clockwise and snap it back into position. The rotated front plastic bezel cover is shown in **Figure 10**.
   d. Replace the front plastic bezel cover on the Liebert GXT3. At this point, the UPS operation and display panel and logo have been rotated 90 degrees clockwise, which provides upright viewing for users.
5. Place the Liebert GXT3 and any battery cabinets on the support bases. Each Liebert GXT3 needs two support assemblies, as shown in **Figure 10**.

Figure 10 Tower installation

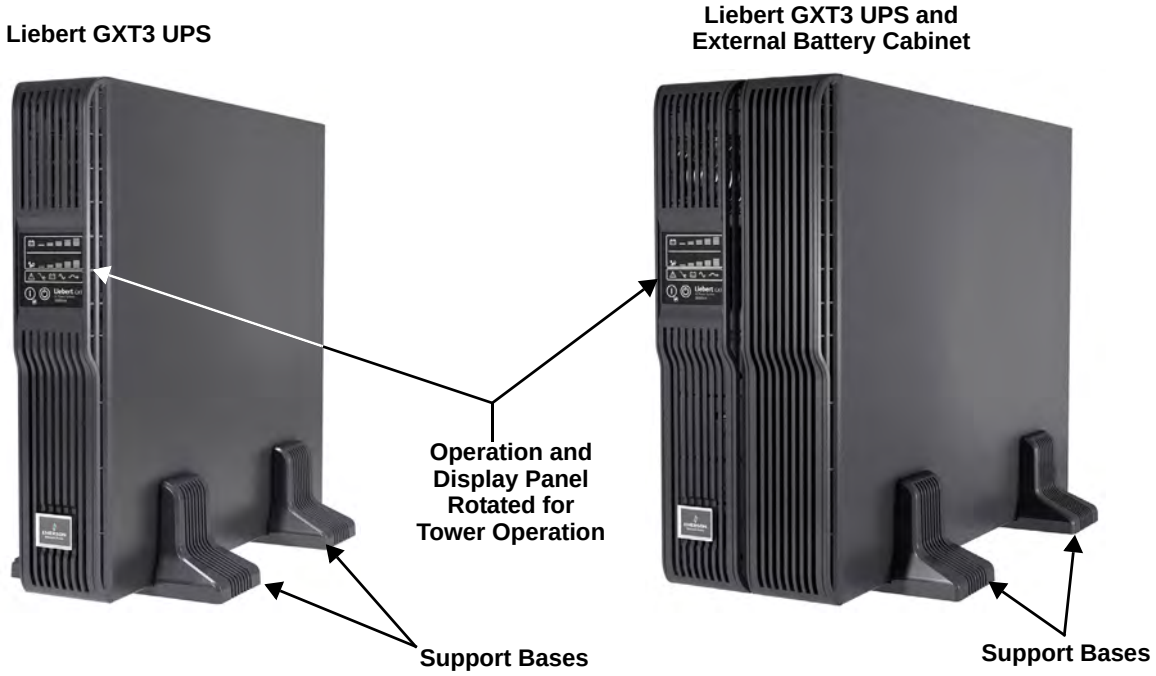

2.4.2 Rack Installation

NOTE

- *When the Liebert GXT3 is installed in a rack, it must be supported by a shelf, brackets or slide rails on each side. The factory-supplied ears cannot support the weight of the UPS. They are used to move the UPS into and out of the rack and attach the UPS to the rack.*
- *Mounting hardware and slide rails are sold separately. Contact your local Emerson representative for these options and any assistance.*
- *GXT3-1000MT120 cannot be installed in a rack. The unit is a minitower only.*

To install a Liebert GXT3 rack/tower UPS in a rack:

1. Unpack the two bracket assemblies and mounting hardware from the rack-mounting kit (P/N: RMKIT18-32).

   Bracket assembly includes inner member and front and rear members. They are interchangeable between left-hand or right-hand. Mounting hardware includes M4 screws and M5 screws.
2. Remove inner member of each bracket assembly by extending it to its outermost position, depressing the retaining latch and then pulling inner member from bracket assembly (see **Figure 11**).

Figure 11 Pulling inner member from each bracket assembly

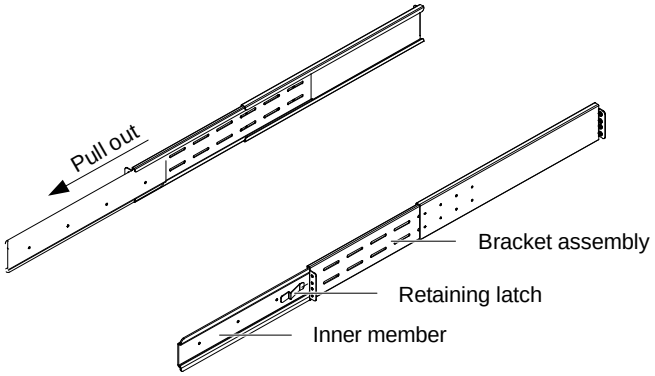

3. Determine the Liebert GXT3's mounting position inside the racks vertical rails.

CAUTION

Reduce the risk of tipping the rack by installing the Liebert GXT3 as low as possible in the rack.

4. Attach the rear member of each bracket assembly to the rack's rails with two factory-supplied M5 screws (see **Figure 12**).

Figure 12 Installing rear member of each bracket assembly

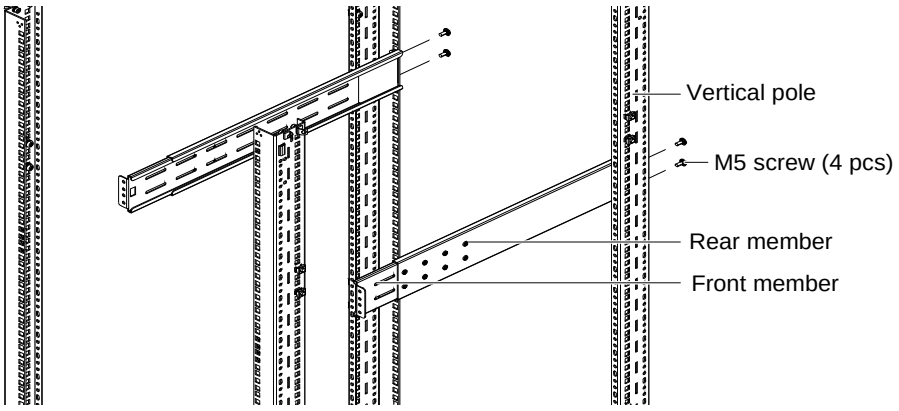

5. Extend the bracket assembly by sliding the front member forward until it touches the rack's front vertical rails (adjustable length: 18 to 32 inches [457-813mm]). Use two M5 screws to fix each front member onto the front vertical rails through the installation holes. Make sure that bracket assemblies are at the same mounting height on all four rack rails, as shown in **Figure 13**.

Figure 13 Installing front member of each bracket assembly

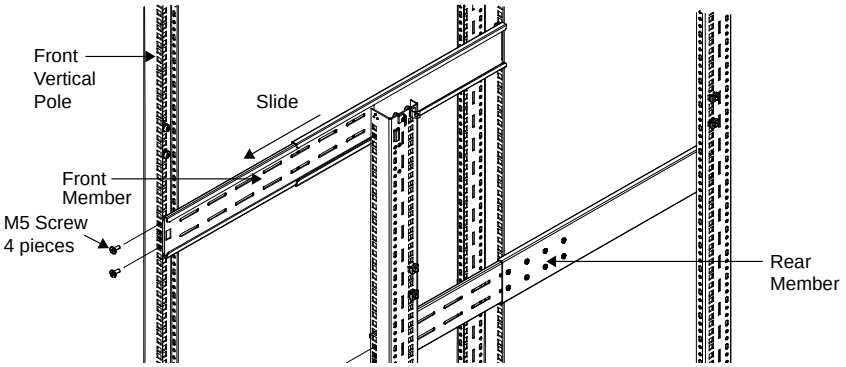

6. Fasten rear member and front member together using four M4 screws and four M4 nuts (M4 nuts have been installed on the rear member before delivery) per bracket assembly, as shown in **Figure 14**.

Figure 14 Fastening rear member and front member together

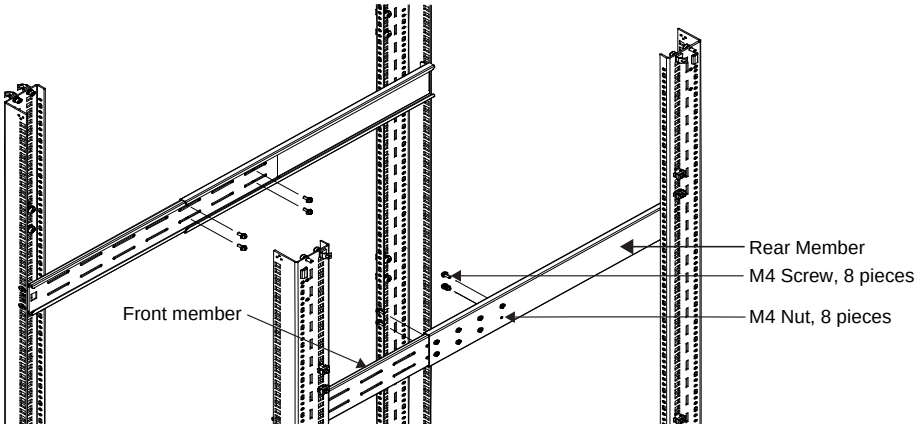

7. Fasten inner members pulled from the bracket assemblies in **Step 2** to the UPS on both sides with eight M4 screws provided in this kit. Make sure that the retaining latch is near the rear of the UPS, as shown in **Figure 15**.

Figure 15 Installing inner members

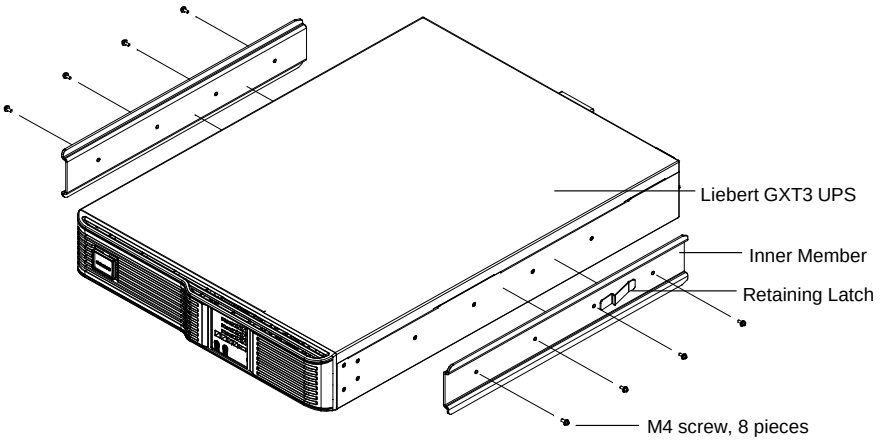

8. Use M4 screws to install ears of accessories on both sides of the UPS, as shown in **Figure 16**.

Figure 16 Installing ears

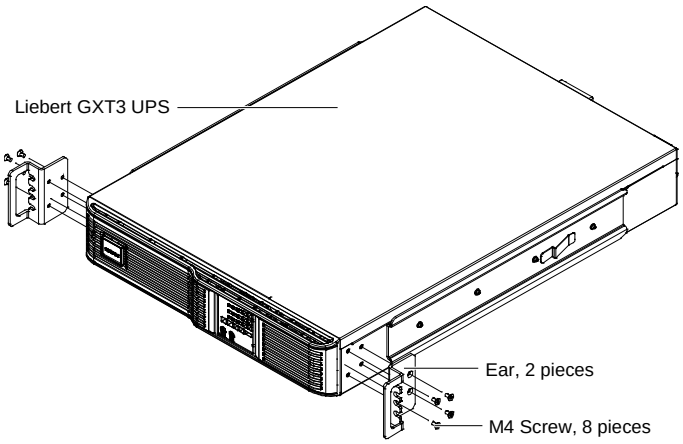

9. Insert the UPS, with inner members attached, into bracket assemblies by inserting top and bottom edges of inner members into the top and bottom, curved tracks of front members and sliding the UPS into rack, as shown in **Figure 17**.

Figure 17 Insert the UPS

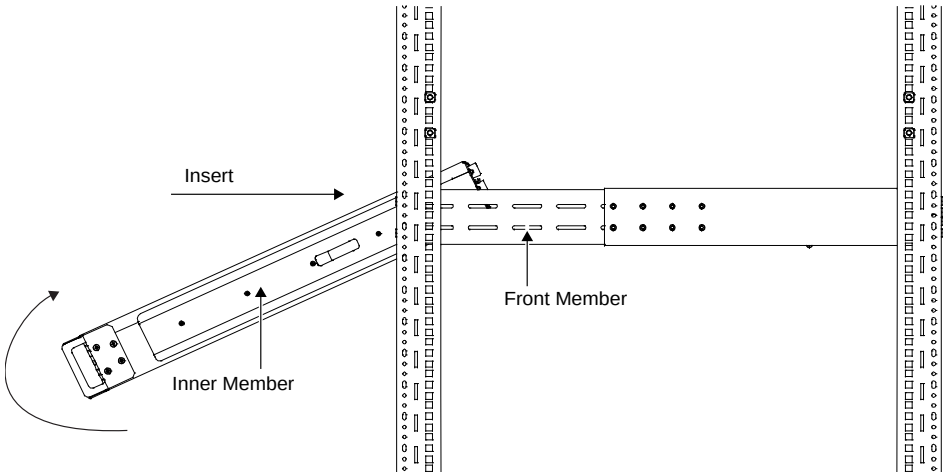

NOTE

Ends of inner members are tapered to allow rear of the UPS to be angled upward before insertion, if space allows.

*The UPS should move smoothly into bracket assemblies. If not, recheck alignment of front and rear members from **Steps 4** through **6**.*

10. Through the ears, use M5 screws provided in this kit to secure front of the UPS to rack EIA rails to prevent the UPS from sliding out of position.
11. If optional Liebert external battery cabinets are connected to the UPS, they can be placed all on one side of the UPS or stacked beneath the UPS. The installation procedures are the same as those of the UPS.

2.5 Cable Connection

The Liebert GXT3 rear panel has an input cable and plug, output receptacles and output cable(s) (Output cables are on GXT3-3000 models only). Refer to **1.3.2 - Rear Panel Features** for details. The battery cables are supplied with the battery cabinet.

2.5.1 Connecting Input Plug and Loads

NOTE
Ensure that all the loads are turned Off.

Prepare an input power supply that is properly protected by a circuit breaker in accordance with national and local electrical codes. The wall receptacle must be grounded.

Emerson recommends installing an upstream circuit breaker of the same series as the Liebert GXT3's input circuit breaker.

The specification of input circuit breaker on the rear panel of UPS is given in **Table 2**.

Table 2 Input circuit breaker specification

Model	Rated Circuit Breaker
GXT3-500RT120	8A
GXT3-700RT120	10A
GXT3-1000RT120	15A
GXT3-1000MT120	15A
GXT3-1500RT120	15A
GXT3-2000RT120	20A
GXT3-3000RT120	30A
GXT3-3000RT208	20A

1. Plug all loads into the output receptacles on the rear panel of the Liebert GXT3.

NOTE
Distribute loads evenly across all receptacles to prevent overloading individual receptacles.

2. Insert the input plug of Liebert GXT3 into the input power connection.

2.5.2 Connecting Battery Cables

1. Switch Off the input breaker of the battery cabinet.
2. Take out the battery cable included with the battery cabinet.
3. Connect one end of the battery cable to the external battery connector on the rear panel of the UPS, and connect the other end to any battery port on the rear panel of the battery cabinet.
4. Switch On the battery breaker on the rear of the external battery cabinet.
5. Use the Configuration Program included with the UPS to specify the number of external battery cabinets connected to the Liebert GXT3. See **Table 14** for approximate battery run times.

2.6 Connecting Communication Cables

Communication cable connection includes: USB and option card cables.

2.6.1 Connecting USB Communication Cables

1. Take the USB communication cables out of the accessories box.
2. Insert one end of the USB communication cable to the USB port on the rear panel of the Liebert GXT3 (see **Figures 3** and **5**).
3. Insert the other end of the USB communication cable to the USB port of the computer.

2.6.2 Installing the Optional Liebert IntelliSlot Card and Communication Cables

1. Remove the protective cover of the Liebert IntelliSlot port on the Liebert GXT3 and set it aside.
2. Insert the Liebert IntelliSlot card into the Liebert IntelliSlot port and secure it with screws.
3. To connect any cable associated with a Liebert IntelliSlot card, refer to the user manual provided with the card.

To configure and use the Liebert IntelliSlot communication card, refer to the card's user manual. Manuals for the various Liebert IntelliSlot cards are available at Liebert's Web site: **www.liebert.com**

3.0 CONTROLS AND INDICATORS

The operation and display panel, shown in **Figure 18**, is on the front panel of the Liebert GXT3 (see **Figures 1** and **2**).

Figure 18 Operation and display panel

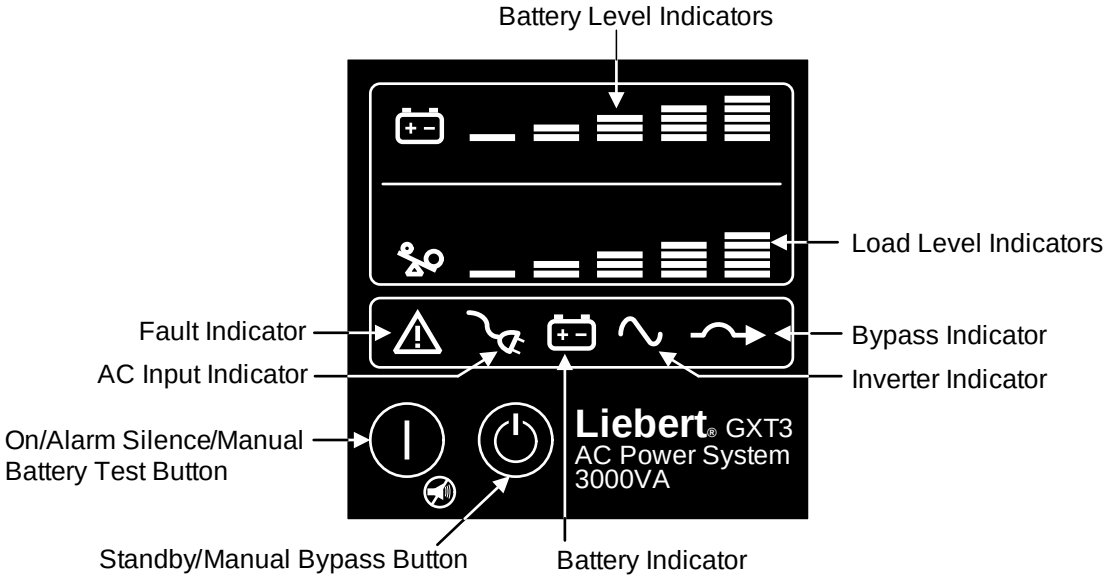

3.1 Control Buttons

The operation and display panel has two control buttons: On/Alarm Silence/Manual Battery Test and Standby/Manual bypass.

3.1.1 On/Alarm Silence/Manual Battery Test Button

The On/Alarm Silence/Manual Battery Test button controls output power to connected load(s) and has three functions (see **Table 3**).

Table 3 Functions of On/Alarm Silence/Manual battery test button

Function	Operation	Description
ON	Press the button once for 3 seconds	To start the UPS
Alarm Silence [1]	Press the button for at least half a second	To silence alarms [2]
Manual Battery Test	Press the button for at least half a second while operating in Utility (AC) Mode with no alarms present.	To initiate a manual battery test

1. The low battery and bypass reminder alarms cannot be silenced.
2. After the alarm is silenced, UPS will reactivate the alarm system to alert of additional problems

3.1.2 Standby/Manual Bypass Button

The Standby/Manual Bypass button controls output power to connected load(s) and has two functions (see **Table 4**).

Table 4 Functions of Standby/Manual Bypass button

Function	Operation	Description
Manual Bypass	Press the button once [1]	To initiate a manual transfer of the connected loads to the internal bypass, if available
Standby	Press the button twice within four seconds while the UPS is in Manual Bypass or Battery Mode [2]	To shut down the UPS and shut Off all power to the connected loads

1. If the bypass is not available due to voltage or frequency, pressing this button once will be ignored.
2. Perform all necessary shutdown procedures on connected loads before turning Off the Liebert GXT3.

3.2 Indicators

The operation and display panel has seven indicators (see **Figure 18**). The indicators can be divided into two groups according to the applications: level indicators and UPS status indicators.

3.2.1 Level Indicators

Battery Level Indicators

The battery level indicator is composed of five sets of LED bars that illuminate and flash to indicate the battery capacity level. The Liebert GXT3 battery capacity level is shown in 20% increments (±5%). The battery level indicators will illuminate as shown in **Figure 19**.

Figure 19 Battery level indicators

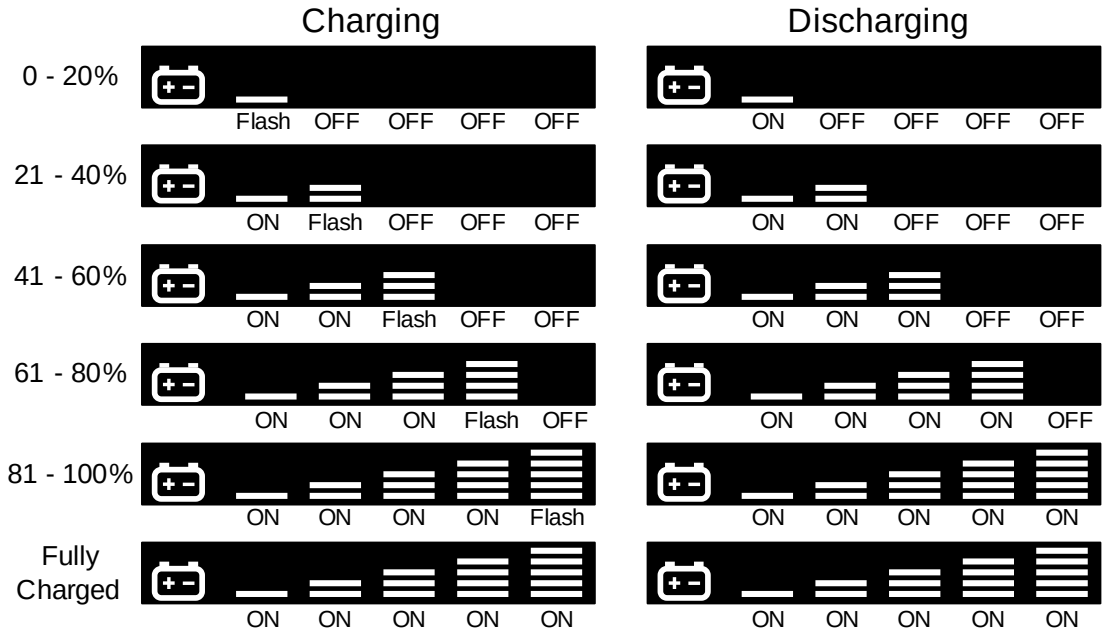

Load Level Indicators

The load level indicator is composed of five LED bars that illuminate to indicate the relative load on the UPS output in 25% increments (± 5%). The load level indicator will illuminate as shown in **Figure 20**.

Figure 20 Load level indicators

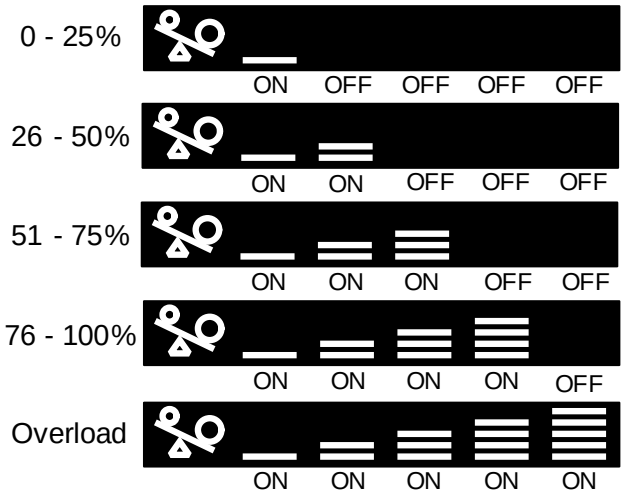

3.2.2 UPS Status Indicators

UPS status is indicated by five symbols: fault indicator, AC input indicator, battery indicator, inverter indicator and bypass indicator. **Table 5** shows the symbols and their meaning.

Table 5 UPS status indicators

UPS Status Indicator	Icon	Color	Description
Fault Indicator		Red	On if the UPS has detected a fault; Off if there is no fault
AC Input Indicator		Green	On when the utility input power is normal; Off during utility failure; flashing when utility power is outside specifications
Battery Indicator		Amber	On when the battery is supplying power; Off when the battery is not supplying power
Inverter Indicator		Green	On when the inverter is supplying power; Off when the inverter is not supplying power
Bypass Indicator		Amber	On when the bypass is supplying power; Off when the inverter is not supplying power; and flashing when utility power is outside specifications

4.0 OPERATION

This section describes checks to be made before starting the UPS, how to start the UPS, manual battery test, manual bypass, shutting down the UPS and disconnecting the utility power from the UPS.

NOTE
The Liebert GXT3's battery has been fully charged before delivery, but some charge will be lost during storage and shipping. To ensure that the battery has adequate reserve power to protect the connected load, charge the battery for three hours before putting the UPS into service.

4.1 Startup Checklist for the Liebert GXT3

Before starting the UPS, perform these checks:

___ 1. Check that the input plugs and loads are connected properly and reliably.

___ 2. Check that all of the battery cables are connected properly.

___ 3. Check that the communication cables are connected properly.

4.2 Starting the UPS

1. Turn On the input circuit breaker—see **Figures 3** and **5** for its location.
2. Turn On the UPS by pressing the On/Alarm Silence/Manual Battery Test button for three seconds.
3. Turn On the connected loads.
4. Check the status indicators to determine whether the Liebert GXT3 is operating normally.
5. Check the load level indicators to verify that the connected load does not exceed the UPS' rated capacity.

The UPS is now providing conditioned power to the load.

4.3 Manual Battery Test

To initiate a manual battery test, press the On/Alarm Silence/Manual Battery Test button for at least half a second while operating from utility power with no alarm conditions present.

- If only first two of the five LED segments illuminate, allow the UPS to recharge the batteries for 24 hours.
- Retest the batteries after 24 hours of charging the batteries.
- After the batteries have been retested, if only two of the five Battery LEDs illuminate, contact your local Emerson representative or Emerson Channel Support.
- If none of the five Battery LEDs illuminate during a manual battery test, check the battery connection and allow the UPS to recharge the batteries for 1 hour and initiate a manual battery test again.
- If none of the five Battery LEDs illuminate during the manual battery test a second time, replace the batteries, and contact your local Emerson representative or Emerson Channel Support.

4.4 Manual Bypass

Press the Standby/Manual Bypass button once while the UPS is in utility (AC) mode, the UPS will transfer the connected loads to the internal bypass. If the internal bypass is not available due to utility power problems, pressing this button once will be ignored. Bypass operation is indicated by an audible alarm and illuminated amber Bypass indicator. If other indicators are illuminated, refer to **7.0 - Troubleshooting**.

4.5 Shut Down the Liebert GXT3

1. Transfer the UPS to manual bypass by pressing the Standby/Manual Bypass button once.
   If manual bypass is not available, disregard the first step.
2. Press the Standby/Manual Bypass button twice within four seconds to shut down the UPS.

Power to the connected loads is now Off.

4.6 Disconnecting Input Power from the Liebert GXT3

1. Once the UPS has been shut down as detailed in **4.5 - Shut Down the Liebert GXT3**, disconnect the input cable plug.
2. Wait 30 seconds and verify that all indicators have turned Off and the fan has stopped; this indicates that the power-off is complete.
3. Turn the external battery cabinet breaker switch to the Off position if the UPS has an external battery cabinet.

After powering Off the UPS, the UPS ceases output and the load is powered Off.

5.0 COMMUNICATION

This chapter describes UPS communication over the three types of communication connections on the rear of the Liebert GXT3:

- Liebert IntelliSlot port
- USB port (standard B-type)
- Terminal Block Communication

CAUTION

To maintain safety (SELV) barriers and for electromagnetic compatibility, signal cables should be segregated and run separate from all other power cables.

5.1 Liebert IntelliSlot Communication Cards

The Liebert IntelliSlot port accepts three optional cards:

- Liebert IntelliSlot SNMP Card
- Liebert IntelliSlot Relay Card
- Liebert IntelliSlot 485 Card.

The Liebert IntelliSlot SNMP Card provides SNMP monitoring and control of the UPS across the network.

The Liebert IntelliSlot Relay Card provides dry contact relay outputs for custom-wired applications and delivers support for built-in shutdown for AS/400 systems.

The Liebert IntelliSlot 485 Card is used to connect the UPS and computer system.

Follow instructions provided with the Liebert IntelliSlot card to configure Liebert MultiLink, the UPS or any additional ancillary product for the Liebert GXT3. These instructions are available at

multilink.liebert.com

5.1.1 Liebert MultiLink

Liebert MultiLink monitors the UPS continuously and can shut down your computer or server in the event of an extended power failure. Liebert MultiLink can also be configured to shut down the UPS.

Liebert's MultiLink can also be configured for use without the USB cable when the Liebert IntelliSlot SNMP Card or Liebert IntelliSlot Web Card is installed in the UPS. An optional Liebert MultiLink License Kit permits shutting down the UPS over a network.

For more information about the Liebert IntelliSlot SNMP Card, Liebert IntelliSlot Web Card and Liebert MultiLink license kits, visit the Liebert Web site (**www.liebert.com**) or contact your local Emerson representative.

5.2 USB Port Communication

The standard B-type USB port is used to connect the UPS and network server or other computer system using Liebert MultiLink. Configuration program can be completed through the communication port.

5.2.1 Configuration Program

Accessing the Configuration Program via USB is a new feature of the Liebert GXT3. For most users, the factory default settings will be adequate. This section illustrates the features available for modification, as well as the factory default setting.

The USB configuration program allows these features of the Liebert GXT3 to be changed:

- Enable/Disable Auto-Restart
- Select frequency converter operation with a fixed output frequency of 50Hz or 60Hz, bypass disabled
- Set the Low Battery Warning alarm time from 2 to 30 minutes
- Enable/Disable the Auto-Battery test
- Enable/Disable Auto-Restart after removing Remote Shutdown
- Set the wiring mode of Remote Shutdown
- Set the Auto-Enable output
- Set the Auto-Battery test to 7, 14, 21 or 28 days
- Select the number of external battery cabinets connected to the UPS to adjust the remaining run time calculated by Liebert software products
- Select one of multiple output voltages to match various voltages, see **Table 6**.

Table 6 Output voltage option

UPS Model	Factory Default, VAC	Output Voltage Option, VAC
GXT3-500RT120 - GXT3-3000RT120 GXT3-1000MT120	120	110, 115, 120 and 127
GXT3-3000RT208	208	208 / 220 / 230 / 240

WARNING

The output voltage settings cannot be changed while the UPS is On and powering connected loads.

NOTE

*For all 120V models, when the output voltage is programmed for 110VAC, the UPS will be automatically derated as follows (refer to **9.0 - Specifications** for VA and watt ratings):*

- *500VA - 1000VA: derated to 95% of both the VA and Watt ratings*
- *1500VA - 3000VA: derated to 90% of both the VA and Watt ratings*

NOTE

- *This program is compatible with UPS models beginning with 'GXT3', as in 'GXT3-3000RT120.' It is not compatible with earlier versions of the Liebert GXT UPS.*
- *A computer running Windows 2000®, XP® or Vista® is required to set up and run the configuration program.*

5.3 Terminal Block Communication

The Terminal Block includes eight pins, as shown in **Figure 21**.

Figure 21 Terminal block layout

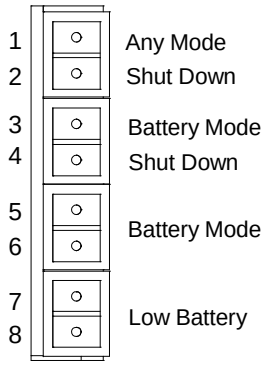

5.3.1 Any-Mode Shutdown

The purpose of Any Mode Shutdown is to shut down the UPS output by turning Off the rectifier, inverter and bypass so that there is no power to the loads.

Any Mode Shutdown can be operated locally and remotely, as described as follows:

- Local Any Mode Shutdown can be performed by shorting Pin1 and Pin2
- Remote Any Mode Shutdown can be performed by a switch connected to Pin1 and Pin2 and mounted at remote a location.

NOTE

Remote Power Off will be performed either by NO or NC contact of Any Mode Shutdown, depending on the settings in the configuration program.

A current-limited source (+12VDC, 50mA) will be available from the UPS.

The connection to the UPS for remote connection will be via terminal block connector.

Any Mode Shutdown wiring must conform to all national, regional and local wiring regulations.

WARNING

When the Auto-Enable output option is selected and the UPS output is disabled using Pin1 and Pin2, the Liebert GXT3's output can turn On automatically and without warning if the Pin1 and Pin2 connection is changed.

5.3.2 Battery Mode Shutdown

Battery Mode Shutdown permits shutting down the UPS by turning Off the rectifier, inverter and bypass so that there is no power to the load when the UPS is On Battery.

Battery Mode Shutdown can be performed locally or remotely:

- Local Any Mode Shutdown can be performed by shorting Pin 3 and Pin 4
- Remote Any Mode Shutdown can be achieved by a switch connected to Pin 3 and Pin 4 and mounted

NOTE

Remote Power Off will be performed by NO contact.

A current-limited source (+12VDC, 50mA) will be available from UPS.

The connection to the Liebert GXT3 for remote connection will be via terminal block connector.

Battery mode shutdown wiring will follow local wiring codes & laws.

This signal must last for 1.5 seconds or longer.

A battery shutdown signal will not cause an immediate shutdown. It will start a 2 minute shut down timer. This timer cannot be stopped once triggered. If utility power returns during this countdown, the Liebert GXT3 will still shut down and must remain shut down for 10 seconds. Whether the UPS turns back On when the power is restored depends on the auto-restart setting.

5.3.3 On Battery

On Battery signal is a Normally Open (NO) dry contact. When the UPS is supplying output power from the battery this dry contact will be closed.

5.3.4 Low Battery

Low Battery signal is a Normally Open (NO) dry contact. When the UPS is supplying output power from the battery and has reached the Low Battery Warning time selected in the configuration program, this dry contact will be closed.

NOTE

The rated values for the dry contacts are:

- *Rated Voltage: 5V*
- *Working Voltage Range: 4.5-10V*
- *Rated Current: 30ma*

6.0 MAINTENANCE

This section describes replacing the internal battery pack, precautions, checking the Liebert GXT3's status and checking UPS functions.

6.1 Replacing the Internal Battery Pack

The Liebert GXT3 is designed to allow the user to replace the internal battery pack safely. Read the safety cautions before proceeding. Contact your local dealer or Emerson representative to obtain the part number and pricing of the appropriate replacement battery pack.

6.1.1 Battery Replacement Procedures

1. Remove the front plastic bezel cover from the UPS.
2. Loosen and remove the six screws on the battery door, as shown in **Figure 22**.
3. Lay the battery door and screws aside for reassembly.

Figure 22 Removing the front bezel cover and battery door

4. Gently pull the battery wire out and disconnect the battery plug and battery receptacle, as shown in **Figure 23**.

Figure 23 Disconnecting the battery plug and battery receptacle (front view)

5. Grasp the battery handle, and pull the internal battery pack out of the UPS, as shown in **Figure 24**.

Figure 24 Pull out the battery

6. Unpack the new internal battery pack. Take care not to destroy the packing.
   Compare the new and old internal battery pack to make sure they are the same type and model. If so, proceed with **Step 7**; if they are different, stop and contact your local Emerson representative, or Emerson Channel Support.
7. Line up and slide in the new internal battery pack.
8. Reconnect the battery plug and battery receptacle
9. Push the battery wire and internal battery pack back into the UPS.
10. Reattach the front battery door with the six screws.
11. Reattach the front plastic bezel cover to the UPS.

NOTE

The internal battery pack is hot-swappable. However, caution should be exercised because during this procedure the load is unprotected from disturbances and power outages. Do not replace the battery while the UPS is operating in Battery Mode. This will result in a loss of output power and will drop the connected load.

6.2 Battery Charging

The batteries are valve-regulated, nonspillable, lead acid and should be kept charged to attain their design life. The Liebert GXT3 charges the batteries continuously when it is connected to the utility input power.

If the Liebert GXT3 will be stored for a long time, Emerson recommends connecting the UPS to input power for at least 24 hours every four to six months to ensure full recharge of the batteries.

WARNING

The battery can present a risk of electrical shock and high short circuit current. The following precautions should be observed before replacing the battery pack:

- Remove rings, watches and other metal objects.
- Use tools with insulated handles.
- Do not lay tools or other metal objects on the batteries.
- If the battery kit is damaged in any way or shows signs of leakage, contact your local Emerson representative immediately.
- Do not dispose of batteries in a fire. The batteries may explode.
- Handle, transport and recycle batteries in accordance with local regulations.

6.3 Precautions

Although the Liebert GXT3 has been designed and manufactured to ensure personal safety, improper use can result in electrical shock or fire. To ensure safety, observe the following precautions:

- Turn Off and unplug the Liebert GXT3 before cleaning it.
- Clean the UPS with a dry cloth. Do not use liquid or aerosol cleaners
- Never block or insert any objects into the ventilation holes or other openings of the Liebert GXT3
- Do not place the Liebert GXT3 power cord where it might be damaged

6.4 Checking UPS Status

Emerson recommends checking the UPS operation status every six months.

- Check if the UPS is faulty: Is the Fault Indicator on? Is the UPS sounding an alarm?
- Check if the UPS is operating in Bypass mode: Normally, the UPS operates in Normal Mode; if it is operating in Bypass Mode, stop and contact your local Emerson representative or Emerson Channel Support.
- Check if the battery is discharging: When the utility input is normal, the battery should not discharge. If the UPS is operating in Battery Mode, stop and contact your local Emerson representative or Emerson Channel Support.

6.5 Checking UPS Functions

NOTE
UPS function check procedures may interrupt power supply to the connected load.

Emerson recommends checking the UPS functions once every six months.

Back up the load data before conducting the UPS functions check. Procedures are as follows:

1. Press the Standby/Manual Bypass button to check whether the buzzer and indicators are normal.
2. Press the On/Alarm Silence/Manual Battery Test button to check again whether the indicators are on and the UPS is operating normally.
3. Press the On/Alarm Silence/Manual Battery Test button for three seconds after Inverter Mode; the UPS should initiate battery self-test. Check to determine whether the battery is operating normally. If not, stop and contact your local Emerson representative or Emerson Channel Support.

7.0 TROUBLESHOOTING

This section indicates various UPS symptoms a user may encounter and troubleshooting steps in the event the UPS develops a problem. Use the following information to determine whether external factors caused the problem and how to remedy the situation.

7.1 UPS Symptoms

The following symptoms indicate the Liebert GXT3 has malfunctions.

- The related indicators will illuminate, indicating the UPS detected a problem.
- An alarm will sound, indicating that the UPS requires attention.

7.1.1 Indicators

In addition to the fault indicator being illuminated, one or more of LED segments of battery level indicator will also be illuminated to provide a diagnostic aid to the user, as shown in **Figure 25**. The descriptions are listed in **Table 7**.

Figure 25 Battery level indicator

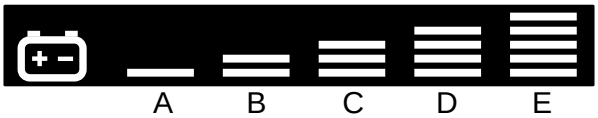

Table 7 Indicator descriptions

Indicator	Diagnosis/Audible alarm
A - E	On bypass from output overload (half-second beep every half second)
A	On bypass due to overtemperature condition (1-second beep every 4 seconds)
B	On bypass due to DC bus overvoltage (1-second beep every 4 seconds)
C	On bypass due to DC/DC power supply failure (1-second beep every 4 seconds)
D	PFC failure (1-second beep every 4 seconds).
E	On bypass due to inverter failure (1-second beep every 4 seconds)
A&C	UPS failed battery test (2-second beep every 60 seconds)
C&E	UPS shutdown by command from communication (USB port or Liebert IntelliSlot port) (no audible)
A&B	UPS Failure (includes dual-fan failure, single-fan failure under certain conditions and battery charger failure) and continuous alarm
Battery Indicator Flashing	Internal Battery source not available (continuous horn); check battery connection, power down and reboot UPS.
AC Input Indicator Flashing	Line-to-neutral reversal in the AC input power supply or a loss of proper grounding for UPS; continuous horn and UPS cannot start in standby status
Bypass Indicator Flashing	Utility power voltage or frequency is out of tolerance; bypass is unavailable

A - E indicators are shown in **Figure 25**

7.1.2 Audible Alarm

An audible alarm will be used in conjunction with the visual indicators to indicate to the user a change in UPS operating status. The audible alarm will enunciate as given in **Table 8**.

Table 8 Audible alarm description

Condition	Alarm
Battery discharge	half-second beep every 10 seconds
Low battery	Two half-second beeps every 5 seconds
UPS fault, load on bypass	1-second beep every 4 seconds
UPS fault, no power to load	Continuous
Overload	half-second beep every half second
Battery replacement	2-second beep every 60 seconds
Battery loss	Continuous
Wiring problem (including line-to-neutral reversal or a loss of proper grounding for UPS)	Continuous
Bypass reminder	1-second beep every 2 minutes

7.2 Troubleshooting

In the event of an issue with the UPS, refer to **Table 9** to determine the cause and solution. If the issue persists, contact Emerson Channel Support.

Table 9 Troubleshooting

Problem	Cause	Solution
UPS fails to start when the On/Alarm Silence/Manual Battery Test button is pressed	UPS is short-circuited or overloaded	Ensure UPS is Off. Disconnect all loads and ensure nothing is lodged in output receptacles. Ensure loads are not defective or shorted internally
Battery indicator is illuminated	UPS not plugged in	UPS is operating from battery mode, ensure UPS is securely plugged into the wall receptacle
	UPS input protection fuse has blown/opened	UPS is operating from battery mode. Save data and close applications. Replace UPS input fuse, then restart UPS
	Utility power is out of tolerance	UPS is operating from battery mode. Save data and close applications. Ensure utility supply voltage is within acceptable limits for UPS
UPS has reduced battery backup time	Batteries are not fully charged	Keep UPS plugged in continuously at least 24 hours to recharge batteries
	UPS is overloaded	Check load level indicator and reduce the load on the UPS
	Batteries may not be able to hold a full charge due to age	Replace batteries. Contact your local dealer, Emerson representative or Emerson Channel Support for replacement battery kit
Fault and Bypass indicators and all LED segments of battery level indicator are illuminated	UPS overloaded or load is faulty	Check load level indicator and remove non-essential loads. Recalculate the load and reduce number of loads connected to UPS. Check load for faults
Fault and Bypass indicators and diagnostic A indicator are illuminated	UPS shutdown due to temperature condition. Load is on bypass power	Ensure UPS is not overloaded, ventilation holes not blocked, or room ambient temperature is not excessive. Wait 30 minutes to allow UPS to cool, then restart UPS. If UPS cannot restart, contact your local dealer, Emerson representative or Emerson Channel Support.

Table 9 Troubleshooting *(continued)*

Problem	Cause	Solution
Fault and Bypass indicators and diagnostic B indicator are illuminated	UPS internal DC bus overvoltage	UPS requires service. Contact your local dealer, Emerson representative or Emerson Channel Support.
Fault and Bypass indicators and diagnostic C indicator are illuminated	UPS DC/DC fault	UPS requires service. Contact your local dealer, Emerson representative or Emerson Channel Support
Fault indicator and diagnostic D indicator are illuminated	UPS PFC (Power Factor Correction Circuit) fault	UPS requires service. Contact your local dealer, Emerson representative or the Emerson Channel Support
Fault and Bypass indicators and diagnostic E indicator are illuminated	UPS inverter fault	UPS requires service. Contact your local dealer, Emerson representative or Emerson Channel Support
Fault indicator and diagnostic A and C indicators are illuminated	UPS failed the battery test	Replace batteries. Contact your local dealer, Emerson representative or Emerson Channel Support
Fault and Bypass indicators and diagnostic C and E indicators are illuminated	UPS shut down by a command from the communications port(s)	Your UPS has received a signal or command from the attached computer. If this was inadvertent, ensure the communication cable used is correct for your system. For assistance, contact your local dealer, Emerson representative or Emerson Channel Support
Fault indicator and diagnostic A and B indicators are illuminated	UPS Failure (Includes Dual Fan failure, single fan failure under certain condition and Battery Charger Failure) and continuous alarm	Ensure fan is not blocked up. If the fault is not removed, contact your local dealer, Emerson representative or Emerson Channel Support
AC input indicator is flashing	UPS detected a line-to-neutral reversal or a loss of proper grounding for UPS; continuous horn and UPS cannot start up in standby status. This is active only when power is first applied to the input. Once the UPS is running, the AC input indictor will flash, unless the input wiring is correctly changed	Contact a qualified electrician to verify site wiring
Battery indicator is flashing	Battery source is not available; continuous horn	Check battery connections, completely power down and restart UPS. NOTE: If the battery circuit opens while the UPS is running, it will be detected when the next battery test is performed
Bypass indicator is flashing	Because the voltage or frequency is outside acceptable limits, the bypass is disabled	The AC input powers the PFC input and serves as the bypass source. If the AC is present but the voltage or frequency exceeds the acceptable range for safe operation with a load, the bypass will be disabled and this indicator will flash, indicating that the bypass is unavailable

When reporting a UPS issue to Emerson, include the UPS model and serial number. These are on the top panel of the Liebert GXT3.

8.0 BATTERY CABINET

Optional battery cabinets are available for the Liebert GXT3. The battery port and input breaker are on the battery cabinet's rear panel, as shown in **Figure 26**. For battery cabinet specifications, refer to **Table 12**.

For battery run times, refer to **Table 14**.

Figure 26 Battery cabinet

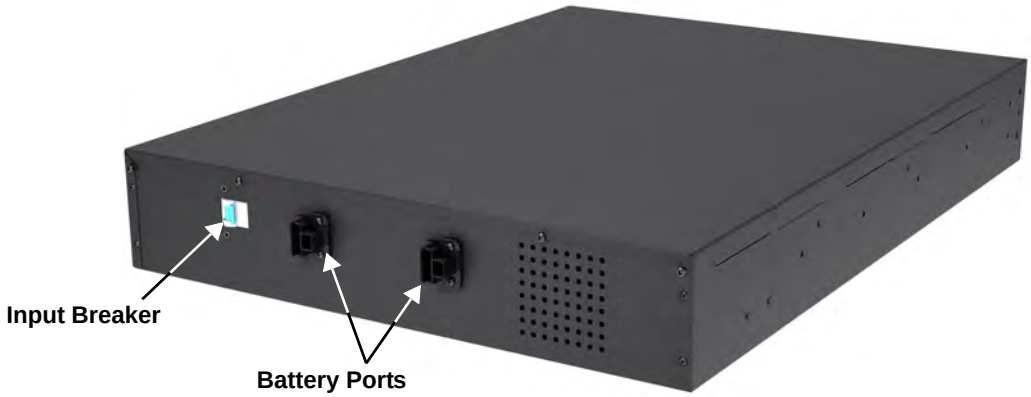

WARNING

Do not contact the battery ports and ground without wearing protective gloves and clothing and taking other precautions against electrical shock. The battery loop and AC input are not insulated, which may cause a dangerous voltage between the battery ports and ground.

9.0 SPECIFICATIONS

Table 10 Specifications of GXT3-500RT120 - GXT3-1000RT120 and GXT3-1000MT120 UPS

Parameters	Product Model			
	GXT3-500RT120 (500VA/450W)	**GXT3-700RT120 (700VA/630W)**	**GXT3-1000RT120 (1000VA/900W)**	**GXT3-1000MT120 (1000VA/900W)**
Dimensions, D × W × H, in. (mm)				
Unit	19.7 x 16.9 x 3.4 (497 × 430 × 85)			15.4 x 6.9 x 8.9 (390 × 175 × 225)
Shipping	25.5 x 23.9 x 10.6 (647 x 607 x 270)			22.1 x 12.9 x 14 (562 × 327 × 355)
Weight, lb (kg)				
Unit	44 (20)			
Shipping	52.9 (24)			
Input AC				
Voltage Range (typical)	120VAC nominal; variable based on output load			
90% ~ 100% loading	90VAC/140VAC			
70% ~ 90% loading	86VAC/140VAC			
30% ~ 70% loading	77VAC/140VAC			
0 ~ 30% loading	60VAC/140VAC			
Frequency	40Hz ~ 70Hz; Auto Sensing			
Input Power Cord	10 ft. attached w/ NEMA 5-15P plug			
Output AC				
Output Receptacles	5-15R × 6			
Voltage	110/115/120/127VAC (user-configurable); ±3%			
Waveform	Sine wave			
Utility (AC) Mode Overload	200% for 2 seconds; 150% for 50 seconds with transfer to bypass			
Battery				
Type	Valve-regulated, nonspillable, lead acid			
Qty × V× Rating	4 × 12V × 5.0Ah			
Battery Mfr./Part #	YUASA/NPH5-12; CSB/ HR 1221W			
Backup Time	See **Table 14**			
Recharge Time	3 Hours to 90% capacity after full discharge with 100% load till UPS auto-shutdown (Internal Batteries Only)			
Environmental Requirements				
Operating Temperature, °F (°C)	32 to 104 (0 to 40); see **Table 13 - Operating temperature parameters**			
Storage Temperature, °F (°C)	5ºF to 122ºF (-15ºC to 50ºC)			
Relative Humidity	0% to 95%, non-condensing			
Operating Elevation	Up to 10,000 ft. (3000m) at 104ºF (40ºC) without derating			
Storage Elevation	50,000 ft. (15000m) maximum			
Audible Noise	<43dBA max @ 3ft. (1m) front and sides <46dBA max @ 3ft. (1m) rear		< 50 dBA, at 3ft. (1m) rear < 45 dBA, at 3ft. (1m) front and sides	
Agency				
Safety	UL 1778, cUL Listed			
RFI/EMI	FCC Part 15, Class A=CISPR22 Class B			
Surge Immunity	IEC 62040-2 2nd Ed			
Transportation	ISTA Procedure 1A			

Table 11 Specifications of GXT3-1500RT120 - GXT3-3000RT120 and GXT3-3000RT208 UPS

Parameters	Product Model			
	GXT3-1500RT120 (1500VA/1350W)	**GXT3-2000RT120 (2000VA/1800W)**	**GXT3-3000RT120 (3000VA/2700W)**	**GXT3-3000RT208 (3000VA/2700W)**
Dimensions, D × W × H, in. (mm)				
Unit	19.7 x 16.9 x 3.4 (497 × 430 × 85)		23.7 x 16.9 x 3.4 (602 × 430 × 85)	
Shipping	25.5 x 23.9 x 10.6 (647 x 607 x 270)		29.4 x 23.4 x 10.6 (747 x 607 x 270)	
Weight, lb. (kg)				
Unit	48.5 (22)	52.9 (24)	61.7 (28)	61.7 (28)
Shipping	57.3 (26)	61.7 (28)	70.5 (32)	70.5 (32)
Input AC				
Voltage Range (typical)	120VAC nominal; variable based on output load			208VAC nominal; variable based on output load
90 - 100% loading	102VAC/140VAC			177VAC/280VAC
70 - 90% loading	96VAC/140VAC			168VAC/280VAC
30 - 70% loading	84VAC/140VAC			150VAC/280VAC
0 - 30% loading	60VAC/140VAC			115VAC/280VAC
Frequency	40 - 70Hz; Auto Sensing			
Input Power Cord	10 ft. attached w/ NEMA 5-15P plug	10 ft. attached w/ NEMA 5-20P plug	10 ft. attached w/ NEMA L5-30P plug	10 ft. attached w/ NEMA L6-20P plug
Output AC				
Output Receptacles	5-15R × 6	5-20R × 6	L5-30R×1+5-20R×6	L6-20R×1+L6-15R×2
Voltage	110/115/120/127VAC (user-configurable); ±3%			208/220/230/240 VAC (user-configurable); ±3%
Waveform	Sine wave			
Utility (AC) Mode Overload	200% for 2 seconds 150% for 50 seconds		200% for 2 seconds 150% for 10 seconds	
Battery				
Type	Valve-regulated, nonspillable, lead acid			
Qty×V×Rating	4 × 12V × 7.2Ah	4 × 12V × 9.0Ah	6 × 12V × 9.0Ah	6 × 12V × 9.0Ah
Battery Mfr./Part #	Panasonic/UP-RW1236 CSB/GP 1272	Panasonic/UP- RW1245; CSB/HR 1234W F2		
Backup Time	See **Table 14**			
Recharge Time	3 Hours to 90% capacity after full discharge with 100% load till UPS auto-shutdown (Internal Batteries Only)			
Environmental				
Operating Temperature, °F (°C)	+32 to +104 (0 to 40); see **Table 13 - Operating temperature parameters**			
Storage Temperature, °F (°C)	5 to +122 (-15 to 50)			
Relative Humidity	0% to 95%, non-condensing			
Operating Elevation	Up to 10,000 ft. (3000m) at 104ºF (40ºC) without derating			
Storage Elevation	50,000 ft. (15000m) maximum			
Audible Noise	< 45dBA at 3ft (1m) rear < 46 dBA at 3ft. (1m) front and side	<48dBA max @ 3ft (1m) front and side <48dBA max @ 3ft. (1m) rear		
Agency				
Safety	UL 1778, c-UL Listed			
RFI/EMI	FCC Part 15, Class A=CISPR22 Class B			
Surge Immunity	IEC 62040-2 2nd Ed			
Transportation	ISTA Procedure 1A			

Table 12 Battery cabinet specifications

Parameter	Model Number	
	GXT3-48VBATT	**GXT3-72VBATT**
Used w/UPS Model	**GXT3-500RT120, GXT3-700RT120 GXT3-1000RT120, GXT3-1000MT120 GXT3-1500RT120, GXT3-2000RT120**	**GXT3-3000RT120 GXT3-3000RT208**
Dimensions, D × W × H, in (mm)		
Unit	19.7 x 16.9 x 3.3 (497 × 430 × 85)	23.7 x 16.9 x 3.3 (602 × 430 × 85)
Shipping	24.3 x 22.4 x 10.3 (617 x 570 x 262)	28.2 x 22.4 x 10.3 (717 x 570 x 262)
Weight, lb (kg)		
Unit	57.3 (26)	83.8 (38)
Shipping	61.7 (28)	92.6 (42)
Battery parameters		
Type	Valve-regulated, nonspillable, lead acid	
Qty × V× Rating	2 × 4 × 12V × 9.0Ah	2 × 6 × 12V × 9.0Ah
Battery Mfr./Part #	Panasonic/UP-RW1245; CSB/HR 1234W F2	
Backup Time	See **Table 14**	
Environmental		
Operating Temperature, °F (°C)	32 to 104 (0 to 40)	
Storage Temperature, °F (°C)	19 to 104 (-15 to 40)	
Relative Humidity	0% to 95%, non-condensing	
Operating Elevation	Up to 10,000 ft. (3000m) at 104ºF (40ºC) without derating	
Storage Elevation	50,000 ft. (15000m) maximum	
Agency		
Safety	UL 1778, c-UL Listed	
RFI/EMI	FCC Part 15, Class A=CISPR22 Class B	
Surge Immunity	IEC 62040-2 2nd Ed	
Transportation	ISTA Procedure 1A	

Table 13 Operating temperature parameters

Ambient Temperature, °C (°F)	25-30 (77-86)	30-35 (86-95)	(95-104)
Maximum Output Power Factor Derating @ Maximum Load	100%-93%	93%-86%	86%-79%

Table 14 Battery run times

Number of Batteries	Model VA [1]	Run Time, Minutes, for Load, W												
													100% Load	
		200	400	600	800	1000	1200	1400	1600	1800	2000	2500	Min.	W
Internal Battery	500VA	30	12	—	—	—	—	—	—	—	—	—	8	450
	700VA	26	14	6	—	—	—	—	—	—	—	—	6	630
	1000VA	28	15	9	5	—	—	—	—	—	—	—	4	900
	1500VA	—	26	16	10	8	5	—	—	—	—	—	4	1350
	2000VA	—	—	20	11	10	8	6	5	4	—	—	4	1800
	3000VA	—	—		25	20	14	10	9	8	5	4	4	2700
Internal Battery + 1External Battery Cabinet	500VA	130	80	—	—	—	—	—	—	—	—	—	66	450
	700VA	126	78	54	—	—	—	—	—	—	—	—	50	630
	1000VA	128	74	52	41	—	—	—	—	—	—	—	27	900
	1500VA	—	110	72	48	36	28	—	—	—	—	—	24	1350
	2000VA	—	—	54	34	34	26	22	17	15	—	—	15	1800
	3000VA	—	—		102	80	56	50	44	38	26	22	18	2700
Internal Battery + 2External Battery Cabinets	500VA	220	130	—	—	—	—	—	—	—	—	—	116	450
	700VA	264	122	88	—	—	—	—	—	—	—	—	82	630
	1000VA	252	126	84	60	—	—	—	—	—	—	—	58	900
	1500VA	—	208	132	94	74	54	—	—	—	—	—	48	1350
	2000VA	—	—	120	82	60	52	44	36	29	—	—	29	1800
	3000VA	—	—		124	114	106	92	74	66	62	46	44	2700
Internal Battery + 3 External Battery Cabinets	500VA	336	150	—	—	—	—	—	—	—	—	—	128	450
	700VA	280	140	120	—	—	—	—	—	—	—	—	116	630
	1000VA	320	148	118	80	—	—	—	—	—	—	—	78	900
	1500VA	—	310	204	138	102	90	—	—	—	—	—	82	1350
	2000VA	—	—	180	126	92	72	62	52	45	—	—	45	1800
	3000VA	—	—	—	174	150	122	110	105	104	76	62	62	2700
Internal Battery + 4 External Battery Cabinets	500VA	630	210	—	—	—	—	—	—	—	—	—	174	450
	700VA	560	300	146	—	—	—	—	—	—	—	—	140	630
	1000VA	600	250	138	116	—	—	—	—	—	—	—	109	900
	1500VA	—	400	256	180	144	110	—	—	—	—	—	100	1350
	2000VA	—	—	240	166	130	108	94	84	64	—	—	64	1800
	3000VA	—	—	—	184	172	150	128	120	119	105	92	84	2700

1. Run times are valid for all models rated with the listed VA.
2. Approximate discharge times are in minutes and at 77°F (25°C) with a resistive load.

9.1 Product Warranty Registration

To register for warranty protection, visit the **Quick Links** section of the Liebert Web site at:

http://www.liebert.com

Click on **Product Warranty Registration** and fill in the form.

If you have any questions, contact Emerson Channel Support at:

North America: 800-222-5877
Outside North America: 00-800-1155-4499
liebert.upstech@emerson.com

Ensuring The High Availability Of Mission-Critical Data And Applications.

Emerson Network Power, the global leader in enabling business-critical continuity, ensures network resiliency and adaptability through a family of technologies—including Liebert power and cooling technologies—that protect and support business-critical systems. Liebert solutions employ an adaptive architecture that responds to changes in criticality, density and capacity. Enterprises benefit from greater IT system availability, operational flexibility and reduced capital equipment and operating costs.

Technical Support / Service

Web Site
www.liebert.com

Monitoring
liebert.monitoring@emerson.com
800-222-5877
Outside North America: +800 1155 4499

Single-Phase & Three-Phase UPS
liebert.upstech@emerson.com
800-222-5877
Outside North America: +800 1155 4499

Environmental Systems
800-543-2778
Outside the United States: 614-888-0246

Locations

United States
1050 Dearborn Drive
P.O. Box 29186
Columbus, OH 43229

Europe
Via Leonardo Da Vinci 8
Zona Industriale Tognana
35028 Piove Di Sacco (PD) Italy
+39 049 9719 111
Fax: +39 049 5841 257

Asia
29/F, The Orient Square Building
F. Ortigas Jr. Road, Ortigas Center
Pasig City 1605
Philippines
+63 2 687 6615
Fax: +63 2 730 9572

While every precaution has been taken to ensure the accuracy and completeness of this literature, Liebert Corporation assumes no responsibility and disclaims all liability for damages resulting from use of this information or for any errors or omissions.
© 2009 Liebert Corporation
All rights reserved throughout the world. Specifications subject to change without notice.
® Liebert is a registered trademark of Liebert Corporation.
All names referred to are trademarks or registered trademarks of their respective owners.

SL-23180_REV0_07-09

Emerson Network Power.

The global leader in enabling *Business-Critical Continuity*.

- **AC Power**
- Connectivity
- DC Power
- Embedded Computing
- Embedded Power
- Monitoring
- Outside Plant
- Power Switching & Controls
- Precision Cooling
- Racks & Integrated Cabinets
- Services
- Surge Protection

EmersonNetworkPower.com

Business-Critical Continuity, Emerson Network Power and the Emerson Network Power logo are trademarks and service marks of Emerson Electric Co.
©2009 Emerson Electric Co.

WAC-2X, Fiber Enclosure, Wall Mount, 2 Panel

ITEM #:
WAC-2X

Description: WAC-2X, Fiber Enclosure, Wall Mount, 2 Panel

Item #: WAC-2X

Features: Wall-mount enclosure accommodates *2 panels* (6-, 8-, 12- or 24- fiber panels). Note:

24 Port Panels only available in LC connectors. 16-gauge steel with corrosion-resistant black powder finish coat. When closed, wall-mount is lockable with a 1" keyed barrel lock. Grommets at the top and bottom allow user to enter main enclosure without unwanted handling of fiber optic cables.

Side swing door allows user to run jumper cable assemblies to final destination. Spools and cable tie down bracket included on the inside compartment.

Dimensions: Width = 13", Depth = 3.6", Height = 9.2"
Weight (unloaded): 6.85 lbs.

ITEM 302

■ Surge Protection
For *Business-Critical Continuity*™

Edco HSP121BT-1RU

Internal Mount 120 VAC Protection

The Edco HSP121BT-1RU is an advanced 3-stage hybrid, solid state power line protector. Features such as noise filtering, common mode and normal mode suppression, nanosecond reaction time, power line tracking, and compression screw terminations, make the Edco HSP121BT-1RU an excellent choice in commercial and industrial applications.

The Edco HSP121BT-1RU offers a replaceable fuse designed to remove the load (protected equipment) from the line if the unit is either overloaded or the internal protection fails. This feature prevents surges from entering equipment through a failed protector, not noticed by the user. Unlike models with only an indicator, which may take weeks to notice, the Edco HSP121BT-1RU demands immediate attention upon the unlikely occurrence of internal failure.

General Technical Specifications

Operating Voltage	120 VAC
Clamping Voltage	325 VAC
Operating Current	15 A
Total Peak Surge Current	39 kA (8 x 20 µs)
Operating Frequency	47-63 Hz
EMI Attenuation	> 40 dB(100 kHz to 100 MHz)
SPD Technology	Metal Oxide Varistors (MOVs) w/ L-C Filter
Modes of Protection	Line-to-Neutral, Line-to-Ground, Neutral-to-Ground
Status Indication	Power On & MOVs functional
Connection Type	3 position, 20A terminal block w/ compression screws Terminals accept up to 14 AWG
Operating Temperature	-40°C to +85°C
Dimensions (Inches)	1.8H x 2.9W x 5.3L
Weight	10 oz
Certifications	UL 1449 recognized
Warranty	5 years

Features

- Fast response time
- Failure indicator
- Power line tracking
- Filtering
- 3-stage hybrid design
- Replaceable fuse
- UL 1449 recognized
- 5 year warranty

EMERSON
Network Power

Installation

1. Remove power from equipment to be protected.
2. Mount Edco HSP121BT-1RU in a UL approved housing. Keep all leads as short as possible (less than 3 feet).
3. Position unit within the equipment cabinet so that the fuse holder will be accessible should the fuse need replacing.
4. Secure HSP using up to six screws to fit 3/16" hole openings. Use sheet metal or wood screws depending on the mounting surface.
5. Make sure wiring from power sources properly connects to LINE side of HSP (torque to 7 in. lbs.). Wiring from protected equipment must properly connect to EQUIP side of HSP (torque to 7 in. lbs.).
6. Indication of internal failure:
   a. Indicator will extinguish.
   b. Fuse blown will disconnect load from power source.
7. Connect only to 120 VAC, 15 Amp Max., single phase, three wire circuit.

WARNING: Disconnect AC source before replacing fuse.

For continued protection against risk of fire, replace only with same type rating of fuse (3AB,15A/250V).

Dimensions

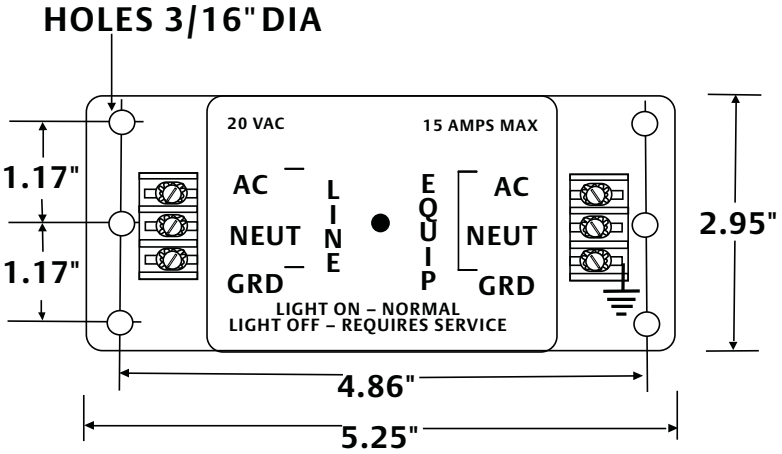

Emerson Network Power.
The global leader in enabling *Business-Critical Continuity™*.

- AC Power
- Connectivity
- DC Power
- Embedded Computing
- Embedded Power
- Monitoring
- Outside Plant
- Power Switching & Control
- Precision Cooling
- Racks and Integrated Cabinets
- Services
- **Surge Protection**

Emerson Network Power Contact information

www.emersonnetworkpower.com

Headquarters
Surge Protection
328 Water Street
Binghamton, NY 13901
T: (607) 721-8840
T: (800) 288-6169
F: (607) 722-8713
E: contactsurge@emerson.com

650 SW 27th Avenue
Ocala, FL 34471
T: (352) 732-3029
T: (800) 648-4076
F: (352) 867-1237

EMERSON
Network Power

IO-50119 2/09 Rev. 1 Printed in USA

Business-Critical Continuity, Emerson Network Power and the Emerson Network Power logo are trademarks and service marks of Emerson Electric Co. ©2009 Emerson Electric Co.

SIEMENS

SIMATIC

S7-300
CPU 31xC and CPU 31x: Technical specifications

Manual

Preface

Guide to the S7-300 documentation 1

Operator controls and indicators 2

Communication 3

PROFINET 4

Memory concept 5

Cycle and response times 6

General technical specifications 7

Technical specifications of CPU 31xC 8

Technical specifications of CPU 31x 9

This manual is part of the documentation package with the order number: 6ES7398-8FA10-8BA0

03/2011
A5E00105475-12

Legal information

Warning notice system

This manual contains notices you have to observe in order to ensure your personal safety, as well as to prevent damage to property. The notices referring to your personal safety are highlighted in the manual by a safety alert symbol, notices referring only to property damage have no safety alert symbol. These notices shown below are graded according to the degree of danger.

⚠ DANGER
indicates that death or severe personal injury **will** result if proper precautions are not taken.

⚠ WARNING
indicates that death or severe personal injury **may** result if proper precautions are not taken.

⚠ CAUTION
with a safety alert symbol, indicates that minor personal injury can result if proper precautions are not taken.

CAUTION
without a safety alert symbol, indicates that property damage can result if proper precautions are not taken.

NOTICE
indicates that an unintended result or situation can occur if the corresponding information is not taken into account.

If more than one degree of danger is present, the warning notice representing the highest degree of danger will be used. A notice warning of injury to persons with a safety alert symbol may also include a warning relating to property damage.

Qualified Personnel

The product/system described in this documentation may be operated only by **personnel qualified** for the specific task in accordance with the relevant documentation for the specific task, in particular its warning notices and safety instructions. Qualified personnel are those who, based on their training and experience, are capable of identifying risks and avoiding potential hazards when working with these products/systems.

Proper use of Siemens products

Note the following:

⚠ WARNING
Siemens products may only be used for the applications described in the catalog and in the relevant technical documentation. If products and components from other manufacturers are used, these must be recommended or approved by Siemens. Proper transport, storage, installation, assembly, commissioning, operation and maintenance are required to ensure that the products operate safely and without any problems. The permissible ambient conditions must be adhered to. The information in the relevant documentation must be observed.

Trademarks

All names identified by ® are registered trademarks of the Siemens AG. The remaining trademarks in this publication may be trademarks whose use by third parties for their own purposes could violate the rights of the owner.

Disclaimer of Liability

We have reviewed the contents of this publication to ensure consistency with the hardware and software described. Since variance cannot be precluded entirely, we cannot guarantee full consistency. However, the information in this publication is reviewed regularly and any necessary corrections are included in subsequent editions.

이 기기는 업무용(A급) 전자파 적합기기로서 판매자 또는 사용자는 이 점을 주의하시기 바라며 가정 외의 지역에서 사용하는 것을 목적으로 합니다.

Siemens AG
Industry Sector
Postfach 48 48
90026 NÜRNBERG
GERMANY

A5E00105475-12
Ⓟ 04/2011

Copyright © Siemens AG 2011.
Technical data subject to change

Preface

Purpose of this manual

This manual contains essential information about the following:

- Installation
- Communication
- Memory concept
- Cycle and response times
- Technical specifications of the CPUs.

Basic knowledge required

- In order to understand this manual, you require a general knowledge of automation engineering.
- You require knowledge of STEP 7 basic software.

Scope

The name CPU 31xC summarizes all compact CPUs, as table below shows:

CPU	Convention: CPU designations:	Order number	As of firmware version
CPU 312C	CPU 31xC	6ES7312-5BF04-0AB0	V3.3
CPU 313C		6ES7313-5BG04-0AB0	V3.3
CPU 313C-2 PtP		6ES7313-6BG04-0AB0	V3.3
CPU 313C-2 DP		6ES7313-6CG04-0AB0	V3.3
CPU 314C-2 PtP		6ES7314-6BH04-0AB0	V3.3
CPU 314C-2 DP		6ES7314-6CH04-0AB0	V3.3
CPU 314C-2 PN/DP		6ES7314-6EH04-0AB0	V3.3

The name CPU 31x summarizes all standard CPUs, as table below shows:

CPU	Convention: CPU designations:	Order number	As of firmware version
CPU 312	CPU 31x	6ES7312-1AE14-0AB0	V3.3
CPU 314		6ES7314-1AG14-0AB0	V3.3
CPU 315-2 DP		6ES7315-2AH14-0AB0	V3.3
CPU 315-2 PN/DP		6ES7315-2EH14-0AB0	V3.2
CPU 317-2 DP		6ES7317-2AK14-0AB0	V3.3
CPU 317-2 PN/DP		6ES7317-2EK14-0AB0	V3.2
CPU 319-3 PN/DP		6ES7318-3EL01-0AB0	V3.2

All CPUs with PROFINET properties are grouped under the designation CPU 31x PN/DP, as the following table shows:

CPU	Convention: CPU designations:	Order number	As of firmware version
CPU 314C-2 PN/DP	CPU 31x PN/DP	6ES7314-6EH04-0AB0	V3.3
CPU 315-2 PN/DP		6ES7315-2EH14-0AB0	V3.2
CPU 317-2 PN/DP		6ES7317-2EK14-0AB0	V3.2
CPU 319-3 PN/DP		6ES7318-3EL01-0AB0	V3.2

Note

A description of the special features of the failsafe CPUs of the S7 product range is available in the product information at the following Internet address (http://support.automation.siemens.com/WW/view/en/11669702/133300).

Note

We reserve the right to include a product Information containing the latest information on new modules or modules of a more recent version.

Changes in comparison to the previous version

The following table contains changes from the previous versions of the following documentation from the S7-300 documentation package:

- Technical specifications manual, version 06/2010
- Operating instructions for installation, version 06/2010

The CPU- 314C-2 PN/DP has been added in delivery stage V3.3. It has the same functionalities as the CPU 314C-2 DP and also has PROFINET functionalities such as those of the CPU 315-2 PN/DP.

In delivery stage V3.3, the functionality and performance of all C-CPUs and the CPU 317-2 DP were improved compared to their predecessor versions.

Additional information was taken from the chapter "Information on converting to a CPU 31xC or CPU 31x". If you required more information, however, please refer to the FAQs on the Internet.

CPU	312	312C	313C	313C-2 DP	313C-2 PtP	314	314C-2 DP	314C-2 PtP	315-2 DP	317-2 DP
Encryption of blocks using S7-Block Privacy	X	X	X	X	X	X	X	X	X	X
Integration of a maintenance LED	X[1, 2]	X [2]	X [2]	X [2]	X [2]	X[1, 2]	X [2]	X [2]	X[1, 2]	X [2]
Configurable increase of control and monitoring performance	-	-	-	-	-	-	-	-	X	X
Improved operational limits for PT100 Analog input	-	-	X	-	-	-	X	X	-	-
Data set routing	-	-	-	X	-	-	X	-	X [1]	X
Configurable process image	X [1]	X	X	X	X	X [1]	X	X	X [1]	X
Expansion of the block number range	X [1]	X	X	X	X	X [1]	X	X	X [1]	X
Number of displayed diagnostic buffer entries can be configured in CPU RUN mode	X [1]	X	X	X	X	X [1]	X	X	X [1]	X
Reading out the service data	X [1]	X	X	X	X	X [1]	X	X	X [1]	X
Extension of SFC 12 with 2 new modes to trigger the OB 86 during enabling/disabling	-	-	-	X	-	-	X	-	X [1]	X
Copying of 512 bytes with SFC 81	X [1]	X	X	X	X	X [1]	X	X	X [1]	X

CPU	312	312C	313C	313C-2 DP	313C-2 PtP	314	314C-2 DP	314C-2 PtP	315-2 DP	317-2 DP
Increase										
Main memory	X [1]	X	X	X	X	X [1]	X	X	X [1]	X
Performance through shorter command processing times	X [1]	X	X	X	X	X [1]	X	X	X [1]	X
Status information that can be monitored by the status block, in STEP 7 V5.5 or higher	X [1]	X	X	X	X	X [1]	X	X	X [1]	X
Number of blocks that can be monitored by the status block (from 1 to 2)	X [1]	X	X	X	X	X [1]	X	X	X [1]	X
Number of breakpoints from 2 to 4	X [1]	X	X	X	X	X [1]	X	X	X [1]	X
Local data stack	X [1]	X	X	X	X	X [1]	X	X	X [1]	X
Number of block-related messages (Alarm_S) is uniformly limited to 300	X [1]	X	X	X	X	X [1]	X	X	X [1]	X
Number of the bit memories, timers and counters	X [1]	X	-	-	-	-	-	-	-	-
Standardization										
DB sizes: Max. 64 KB	X[1, 3]	X	X	X	X	X [1]	X	X	X [1]	X [1]
Watchdog interrupts: OB 32 to OB 35	X [1]	X	X	X	X	X [1]	X	X	X [1]	X [1]
Global data communication of 8 GD circles	X [1]	X	X	X	X	X [1]	X	X	X [1]	X [1]
System function blocks for integrated technology functions:										
SFB 41 to 43	-	-	X [1]	X [1]	X [1]	-	X [1]	X [1]	-	-
SFB 44 and 46	-	-	-	-	-	-	X [1]	X [1]	-	-
SFB 47 to 49	-	X [1]	X [1]	X [1]	X [1]	-	X [1]	X [1]	-	-
SFB 60 to 62	-	-	-	-	X [1]	-	-	X [1]	-	-
SFB 63 to 65	-	-	-	-	-	-	-	X [1]	-	-

[1] This function was already made available to the CPU in an earlier version

[2] Available, but without function

[3] Max. DB size 32 KB

Standards and certifications

For information about standards and approvals, see the section "General technical specifications (Page 201)".

Recycling and disposal

Because they have ecologically compatible components, the devices described in this manual can be recycled. For environment-friendly recycling and disposal of your old equipment, contact a certified disposal facility for electronic scrap.

Service & Support on the Internet

In addition to our documentation, we offer a comprehensive knowledge base online on the Internet (http://www.siemens.com/automation/service&support).

There you will find:

- Our newsletter containing up-to-date information on your products
- The latest documents in the Siemens Service & Support (http://www.siemens.com/automation/service&support) search engine.
- A forum for global information exchange by users and specialists.
- Your local representative for automation and drives in our contact database
- Information about on-site services, repairs, spare parts, and lots more.
- Applications and tools for the optimized use of the SIMATIC S7. For example, Siemens also publishes DP and PN performance measurements on the Internet (http://www.siemens.com/automation/pd).

Table of contents

Preface 3

1 Guide to the S7-300 documentation 13

1.1 Documentation classification 13

1.2 Guide to the S7-300 documentation 18

2 Operator controls and indicators 21

2.1 Operator controls and indicators of the compact CPUs (CPU 31xC) 21
2.1.1 Operator controls and indicators: CPU 312C 21
2.1.2 Operator controls and indicators: CPU 313C 24
2.1.3 Operator controls and indicators: CPU 313C-2 PtP 27
2.1.4 Operator controls and indicators: CPU 313C-2 DP 30
2.1.5 Operator controls and indicators: CPU 314C-2 PtP 33
2.1.6 Operator controls and indicators: CPU 314C-2 DP 37
2.1.7 Operator controls and indicators: CPU 314C-2 PN/DP 41

2.2 Operator controls and indicators of the standard CPUs (CPU 31x) 45
2.2.1 Operator controls and indicators: CPU 312 and CPU 314 45
2.2.2 Operator controls and indicators: CPU 315-2 DP and CPU 317-2 DP 47
2.2.3 Operator controls and indicators: CPU 315-2 PN/DP and CPU 317-2 PN/DP 50
2.2.4 Operator controls and indicators: CPU 319-3 PN/DP 52

3 Communication 57

3.1 Interfaces 57
3.1.1 Multi-Point Interface (MPI) 57
3.1.2 PROFIBUS DP 58
3.1.3 PROFINET 59
3.1.3.1 Configuring the port properties 63
3.1.4 Point-to-point (PtP) 64

3.2 Communication services 65
3.2.1 Overview of communication services 65
3.2.2 PG communication 67
3.2.3 OP communication 68
3.2.4 S7 basic communication 68
3.2.5 S7 communication 69
3.2.6 Global data communication (MPI only) 70
3.2.7 Routing 71
3.2.8 Data record routing 75
3.2.9 Clock synchronization 77
3.2.10 Point-to-point connection 79
3.2.11 Data consistency 79

3.3 SNMP communication service 80

3.4 Open communication via Industrial Ethernet 81

3.5 S7 connections ... 84
3.5.1 S7 connection as communication path ... 84
3.5.2 Allocation of S7 connections ... 85
3.5.3 Distribution and availability of S7 connection resources ... 87
3.5.4 Connection resources for routing ... 89

3.6 DPV1 ... 91

3.7 Web server ... 93
3.7.1 Language settings ... 95
3.7.2 Settings in HW Config, "Web" tab ... 97
3.7.3 Updating and storing information ... 100
3.7.4 Web pages ... 101
3.7.4.1 Start page with general CPU information ... 101
3.7.4.2 Identification ... 103
3.7.4.3 Diagnostic buffer ... 104
3.7.4.4 Module information ... 106
3.7.4.5 Messages ... 113
3.7.4.6 Communication ... 114
3.7.4.7 Topology ... 120
3.7.4.8 Status of the variables ... 127
3.7.4.9 Variable tables ... 128
3.7.4.10 User pages ... 131

4 PROFINET ... 135

4.1 Communication via PROFINET ... 135
4.1.1 Introduction ... 135
4.1.2 PROFINET IO System ... 138
4.1.3 Blocks for PROFINET IO ... 140

4.2 Isochronous real-time communication ... 143

4.3 Prioritized startup ... 144

4.4 Device replacement without removable medium/programming device ... 145

4.5 IO devices changing at runtime ... 145

4.6 Isochronous mode ... 146

4.7 I-Device ... 146

4.8 Shared Device ... 147

4.9 Media redundancy ... 148

5 Memory concept ... 149

5.1 Memory areas and retentivity ... 149
5.1.1 CPU memory areas ... 149
5.1.2 Retentivity of load memory, system memory, and main memory ... 150
5.1.3 Retentivity of memory objects ... 151
5.1.4 Address areas of the system memory ... 153
5.1.5 Properties of the SIMATIC Micro Memory Card ... 158

5.2 Memory functions 159
5.2.1 General: Memory functions 159
5.2.2 Download of the user program to the SIMATIC Micro Memory Card in the CPU 160
5.2.3 Handling with blocks 161
5.2.3.1 Encryption of blocks 161
5.2.3.2 Reloading or transferring blocks 162
5.2.3.3 Uploading blocks 163
5.2.3.4 Deleting blocks 163
5.2.3.5 Compressing blocks 163
5.2.3.6 Promming (RAM to ROM) 163
5.2.4 Memory reset and restart 164
5.2.5 Recipes 165
5.2.6 Measured value log files 167
5.2.7 Backup of project data to SIMATIC Micro Memory Card 169

6 Cycle and response times 171

6.1 Overview 171

6.2 Cycle time 172
6.2.1 Overview: Cycle time 172
6.2.2 Calculating the cycle time 174
6.2.3 Different cycle times 178
6.2.4 Communication load 180
6.2.5 Cycle time extension as a result of test and commissioning functions 182
6.2.6 Cycle extension through Component Based Automation (CBA) 183

6.3 Response time 187
6.3.1 Overview: Response time 187
6.3.2 Shortest response time 189
6.3.3 Longest response time 190
6.3.4 Reducing the response time using I/O accesses 191

6.4 Calculating method for calculating the cycle/response time 192

6.5 Sample calculations for the cycle and response times 193

6.6 Interrupt response time 196
6.6.1 Overview: Interrupt response time 196
6.6.2 Reproducibility of time-delay and watchdog interrupts 198

6.7 Example of interrupt response time calculation 199

7 General technical specifications 201

7.1 Standards and certifications 201

7.2 Electromagnetic compatibility 206

7.3 Transportation and storage conditions for modules 208

7.4 Mechanical and climatic environmental conditions for S7-300 operation 209

7.5 Specification of dielectric tests, protection class, degree of protection, and rated voltage of S7-300 211

7.6 Rated voltages of S7-300 211

8 Technical specifications of CPU 31xC 213
8.1 General technical specifications 213
8.1.1 Dimensions of CPU 31xC 213
8.1.2 Technical specifications of the Micro Memory Card 214
8.2 CPU 312C 215
8.3 CPU 313C 224
8.4 CPU 313C-2 PtP and CPU 313C-2 DP 233
8.5 CPU 314C-2 PtP and CPU 314C-2 DP 245
8.6 CPU 314C-2 PN/DP 257
8.7 Technical specifications of the onboard I/O 272
8.7.1 Arrangement and usage of integrated inputs/outputs 272
8.7.2 Analog I/O devices 278
8.7.3 Parameterization 283
8.7.4 Interrupts 289
8.7.5 Diagnostics 290
8.7.6 Digital inputs 290
8.7.7 Digital outputs 292
8.7.8 Analog inputs 294
8.7.9 Analog outputs 297
9 Technical specifications of CPU 31x 301
9.1 General technical specifications 301
9.1.1 Dimensions of CPU 31x 301
9.1.2 Technical specifications of the SIMATIC Micro Memory Card 302
9.2 CPU 312 303
9.3 CPU 314 311
9.4 CPU 315-2 DP 319
9.5 CPU 315-2 PN/DP 329
9.6 CPU 317-2 DP 344
9.7 CPU 317-2 PN/DP 355
9.8 CPU 319-3 PN/DP 370
Glossary 387
Index 415

Guide to the S7-300 documentation 1

1.1 Documentation classification

Documentation classification

The documentation listed below is part of the S7-300 documentation package.

You can also find this on the Internet and the corresponding entry ID.

Name of the documentation	Description
Manual CPU 31xC and CPU 31x: Technical specifications Entry ID: 12996906 (http://support.automation.siemens.com/WW/view/en/12996906)	Description of: • Operator controls and indicators • Communication • Memory concept • Cycle and response times • Technical specifications
Operating Instructions CPU 31xC and CPU 31x: Installation Entry ID: 13008499 (http://support.automation.siemens.com/WW/view/en/13008499)	Description of: • Configuring • Installing • Wiring • Addressing • Commissioning • Maintenance and the test functions • Diagnostics and troubleshooting
Operating Instructions CPU 31xC: Technological functions incl. CD Entry ID: 12429336 (http://support.automation.siemens.com/WW/view/en/12429336)	Description of the specific technological functions: • Positioning • Counting • Point-to-point connection • Rules The CD contains examples of the technological functions.

Name of the documentation	Description
Manual S7-300 Automation System: Module data Entry ID: 8859629 (http://support.automation.siemens.com/WW/view/en/8859629)	Descriptions and technical specifications of the following modules: • Signal modules • Power supplies • Interface modules
List Manual Instruction List of the S7-300 CPUs and ET- 200 CPUs Entry ID: 31977679 (http://support.automation.siemens.com/WW/view/en/31977679)	• List of the instruction set of the CPUs and their execution times. • List of the executable blocks (OBs/SFCs/SFBs) and their execution times.

Additional information

You also require information from the following descriptions:

Name of the documentation	Description
Getting Started S7-300 Automation System: Getting Started CPU 31x: Commissioning Entry ID: 15390497 (http://support.automation.siemens.com/WW/view/en/15390497)	Description of examples showing the various commissioning phases leading to a functional application.
Getting Started S7-300 Automation System: Getting Started CPU 31xC: Commissioning Entry ID: 48077635 (http://support.automation.siemens.com/WW/view/en/48077635)	Description of examples showing the various commissioning phases leading to a functional application.
Getting Started First steps in commissioning CPU 31xC: Positioning with analog output Entry ID: 48070939 (http://support.automation.siemens.com/WW/view/en/48070939)	Description of examples showing the various commissioning phases leading to a functional application.
Getting Started First steps in commissioning CPU 31xC: Positioning with digital output Entry ID: 48077520 (http://support.automation.siemens.com/WW/view/en/48077520)	Description of examples showing the various commissioning phases leading to a functional application.

Name of the documentation	Description
Getting Started First steps in commissioning CPU 31xC: Counting Entry ID: 48064324 (http://support.automation.siemens.com/WW/view/en/48064324)	Description of examples showing the various commissioning phases leading to a functional application.
Getting Started First steps in commissioning CPU 31xC: Point-to-point connection Entry ID: 48064280 (http://support.automation.siemens.com/WW/view/en/48064280)	Description of examples showing the various commissioning phases leading to a functional application.
Getting Started First steps in commissioning CPU 31xC: Rules Entry ID: 48077500 (http://support.automation.siemens.com/WW/view/en/48077500)	Description of examples showing the various commissioning phases leading to a functional application.
Getting Started CPU315-2 PN/DP, 317-2 PN/DP, 319-3 PN/DP: Configuring the PROFINET interface Entry ID: 48080216 (http://support.automation.siemens.com/WW/view/en/48080216)	Description of examples showing the various commissioning phases leading to a functional application.
Getting Started CPU 317-2 PN/DP: Configuring an ET 200S as PROFINET IO device Entry ID: 19290251 (http://support.automation.siemens.com/WW/view/en/19290251)	Description of examples showing the various commissioning phases leading to a functional application.
Reference Manual System and standard functions for S7-300/400, volume 1/2 Entry ID: 1214574 (http://support.automation.siemens.com/WW/view/en/1214574)	Overview of objects included in the operating systems for S7-300 and S7-400 CPUs: • OBs • SFCs • SFBs • IEC functions • Diagnostics data • System status list (SSL) • Events This manual is part of the STEP 7 reference information. You can also find the description in the STEP 7 Online Help.

Name of the documentation	Description
Manual Programming with STEP 7 Entry ID: 18652056 (http://support.automation.siemens.com/WW/view/en/18652056)	This manual provides a complete overview of programming with the STEP 7 Standard Package. This manual is part of the STEP 7 Standard Package basic information. You can also find a description in the STEP 7 Online Help.
System Manual PROFINET System Description Entry ID: 19292127 (http://support.automation.siemens.com/WW/view/en/19292127)	Basic description of PROFINET: • Network components • Data exchange and communication • PROFINET IO • Component Based Automation • Application example of PROFINET IO and Component Based Automation
Programming manual From PROFIBUS DP to PROFINET IO Entry ID: 19289930 (http://support.automation.siemens.com/WW/view/en/19289930)	Guideline for the migration from PROFIBUS DP to PROFINET I/O.
Manual SIMATIC NET: Twisted Pair and Fiber-Optic Networks Entry ID: 8763736 (http://support.automation.siemens.com/WW/view/en/8763736)	Description of: • Industrial Ethernet networks • Network configuration • Components • Guidelines for setting up networked automation systems in buildings, etc.
Configuring Manual Configure SIMATIC iMap plants Entry ID: 22762190 (http://support.automation.siemens.com/WW/view/en/22762190)	Description of the SIMATIC iMap configuration software
Configuring Manual SIMATIC iMap STEP 7 AddOn, create PROFINET components Entry ID: 22762278 (http://support.automation.siemens.com/WW/view/en/22762278)	Descriptions and instructions for creating PROFINET components with STEP 7 and for using SIMATIC devices in Component Based Automation

Name of the documentation	Description
Function Manual Isochronous mode Entry ID: 15218045 (http://support.automation.siemens.com/WW/view/en/15218045)	Description of the system property "Isochronous mode"
System Manual Communication with SIMATIC Entry ID: 1254686 (http://support.automation.siemens.com/WW/view/en/1254686)	Description of: • Basics • Services • Networks • Communication functions • Connecting PGs/OPs • Engineering and configuring in STEP 7

Service & support on the Internet

Information on the following topics can be found on the Internet (http://www.siemens.com/automation/service):

- Contacts for SIMATIC (http://www.siemens.com/automation/partner)
- Contacts for SIMATIC NET (http://www.siemens.com/simatic-net)
- Training (http://www.sitrain.com)

See also

Documentation package S7-300
(http://support.automation.siemens.com/WW/view/en/10805159/133300)

1.2 Guide to the S7-300 documentation

Overview

The following tables contain a guide through the S7-300 documentation.

Ambient influence on the automation system

Information about ...	is available in the manual ...	In Section ...
What provisions do I have to make for automation system installation space?	• CPU 31xC and CPU 31x: Installation	Configuring – Component dimensions Mounting – Installing the mounting rail
How do environmental conditions influence the automation system?	• CPU 31xC and CPU 31x: Installation	Appendix

Isolation

Information about ...	is available in the manual ...	In Section ...
Which modules can I use if electrical isolation is required between sensors/actuators?	• CPU 31xC and CPU 31x: Installation • Module data	Configuring – Electrical assembly, protective measures and grounding
Under what conditions do I have to isolate the modules electrically? How do I wire that?	• CPU 31xC and CPU 31x: Installation	Configuring – Electrical assembly, protective measures and grounding Wiring
Under which conditions do I have to isolate stations electrically? How do I wire that?	• CPU 31xC and CPU 31x: Installation	Configuring – Configuring subnets

Communication between sensors/actuators and the PLC

Information about ...	is available in the manual ...	In Section ...
Which module is suitable for my sensor/actuator?	• CPU 31xC and CPU 31x: Technical specifications • For your signal module	Technical specifications
How many sensors/actuators can I connect to the module?	• CPU 31xC and CPU 31x: Technical specifications • For your signal module	Technical specifications
How do I connect my sensors/actuators to the automation system, using the front connector?	• CPU 31xC and CPU 31x: Installation	Wiring – Wiring the front connector

Information about ...	is available in the manual ...	In Section ...
When do I need expansion modules (EM) and how do I connect them?	• CPU 31xC and CPU 31x: Installation	Configuring – Distribution of modules across multiple racks
How do I mount modules on racks / mounting rails?	• CPU 31xC and CPU 31x: Installation	Assembly – Installing modules on the mounting rail

The use of local and distributed IOs

Information about ...	is available in the manual ...	In Section ...
Which range of modules do I want to use?	• Module data (for centralized IOs/ expansion devices) • of the respective peripheral (for distributed IOs/ PROFIBUS DP)	–

Configuration consisting of the central controller and expansion units

Information about ...	is available in the manual ...	In Section ...
Which rack / mounting rail is most suitable for my application?	• CPU 31xC and CPU 31x: Installation	Configuring
Which interface modules (IM) do I need to connect the expansion units to the central controller?	• CPU 31xC and CPU 31x: Installation	Configuring – Distribution of modules across multiple racks
What is the right power supply (PS) for my application?	• CPU 31xC and CPU 31x: Installation	Configuring

CPU performance

Information about ...	is available in the manual ...	In Section ...
Which memory concept is best suited to my application?	• CPU 31xC and CPU 31x: Technical specifications	Memory concept
How do I insert and remove Micro Memory Cards?	• CPU 31xC and CPU 31x: Installation	Commissioning – Commissioning modules – Removing / inserting a Micro Memory Card (MMC)
Which CPU meets my demands on performance?	• S7-300 instruction list: CPU 31xC and CPU 31x	–
Length of the CPU response / execution times	• CPU 31xC and CPU 31x: Technical specifications	–
Which technological functions are implemented?	• Technological functions	–
How can I use these technological functions?	• Technological functions	–

Communication

Information about ...	is available in the manual ...	In Section ...
Which principles do I have to take into account?	• CPU 31xC and CPU 31x: Technical specifications • Communication with SIMATIC • PROFINET System Description	Communication
Options and resources of the CPU	• CPU 31xC and CPU 31x: Technical specifications	Technical specifications
How to use communication processors (CPs) to optimize communication	• CP Manual	–
Which type of communication network is best suited to my application?	• CPU 31xC and CPU 31x: Installation	Configuring – Configuring subnets
How do I network the various components?	• CPU 31xC and CPU 31x: Installation	Configuring – Configuring subnets
What to take into account when configuring PROFINET networks	• SIMATC NET, twisted-pair and fiber-optic networks (6GK1970-1BA10-0AA0)	Network configuration
	• PROFINET System Description	Installation and commissioning

Software

Information about ...	is available in the manual ...	In Section ...
Software requirements of my S7-300 system	• CPU 31xC and CPU 31x: Technical specifications	Technical specifications

Supplementary features

Information about ...	is available in ...
How can I implement operation and monitoring functions? (Human Machine Interface)	The relevant manual: • For text-based displays • For Operator Panels • For WinCC
How to integrate process control modules	• Respective PCS7 manual
What options are offered by redundant and fail-safe systems?	• S7-400H – Fault-Tolerant Systems • Failsafe systems
Information to be observed when migrating from PROFIBUS DP to PROFINET IO	• From PROFIBUS DP to PROFINET IO

Operator controls and indicators 2

2.1 Operator controls and indicators of the compact CPUs (CPU 31xC)

2.1.1 Operator controls and indicators: CPU 312C

Operator controls and indicators of the CPU 312C

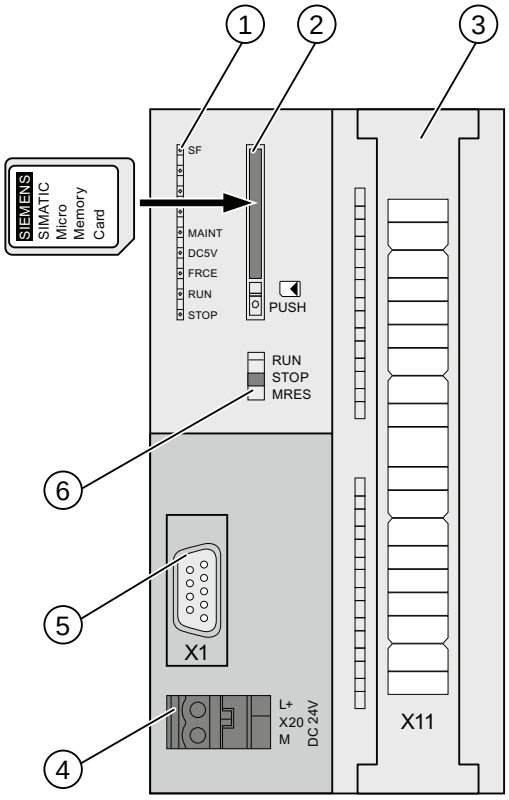

Number	Designation
①	Status and error indicators
②	Slot for the SIMATIC Micro Memory Card incl. the ejector
③	Terminals of the integrated inputs and outputs
④	Power supply connection
⑤	interface X1 (MPI)
⑥	Mode selector

The figure below shows the integrated digital inputs/outputs of the CPU with open front doors.

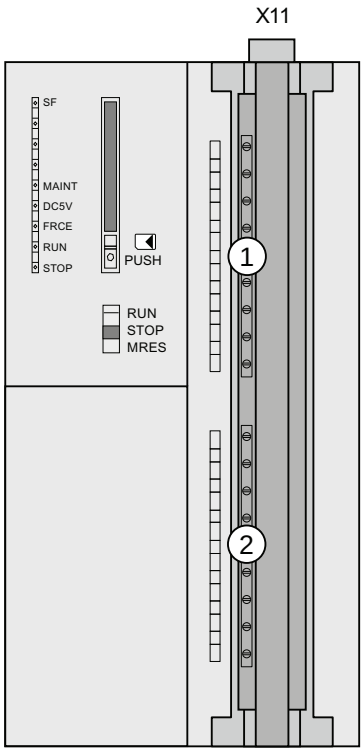

Number	Designation
①	Digital inputs (PIN 2 to 10)
②	Digital input (PIN 11) and digital outputs (PIN 14 to pin 19)

Status and error indicators

LED designation	Color	Meaning
SF	red	Hardware fault or software error
MAINT	yellow	Maintenance demanded (without function)
DC5V	green	5 V power supply for CPU and S7-300 bus is OK
FRCE	yellow	LED is lit: Active force job LED flashes at 2 Hz: Node flash test function
RUN	green	CPU in RUN mode The LED flashes during start-up at a rate of 2 Hz, and in stop mode at 0.5 Hz
STOP	yellow	CPU in STOP, or HOLD or start-up The LED flashes at a rate of 0.5 Hz when a memory reset is requested, and at 2 Hz during the reset.

Slot for the SIMATIC Micro Memory Card

A SIMATIC Micro Memory Card is used as memory module. You can use an MMC as a load memory and as a portable data carrier.

Note

Since these CPUs do not have an integrated load memory, they require a SIMATIC Micro Memory Card for operation.

Mode selector

Use the mode selector to set the CPU operating mode.

Table 2- 1 Mode selector settings

Setting	Meaning	Explanations
RUN	RUN mode	The CPU executes the user program.
STOP	STOP mode	The CPU does not execute a user program.
MRES	Memory reset	Mode selector setting with pushbutton function for CPU memory reset. A CPU memory reset by means of the mode selector requires a specific sequence of operation.

Power supply connection

All CPUs are equipped with a 2-pin socket for power supply connection. For delivery, the connector with screw terminals is plugged into this inlet at the factory.

Properties of the CPU in relation to interfaces, integrated inputs/outputs and technological functions

Table 2- 2 Properties of the CPUs 312C in relation to interfaces, integrated inputs/outputs and technological functions

Item	CPU 312C
9-pin MPI interface (X1)	Yes
Digital inputs	10
Digital outputs	6
Technological functions	2 counters (See the technological functions manual terminal assignment (http://support.automation.siemens.com/WW/view/en/26090032))

Reference

- CPU operating state: *STEP 7 online help*
- Information on CPU memory reset: *CPU 31xC and CPU 31x operating instructions, Commissioning, Commissioning Modules, Memory reset by means of Mode Selector of the CPU*
- Evaluation of the LEDs upon error or diagnostic event: *CPU 31xC and CPU 31x Operating Instructions, Test Functions, Diagnostics and Troubleshooting, Diagnostics with the Help of Status and Error LEDs*

2.1.2 Operator controls and indicators: CPU 313C

Operator controls and indicators of the CPU 313C

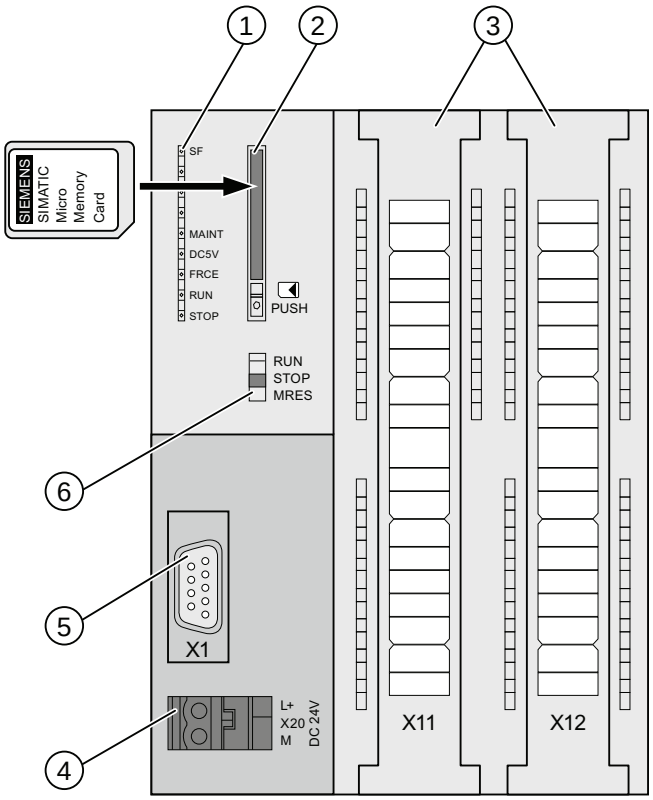

Number	Designation
①	Status and error indicators
②	Slot for the SIMATIC Micro Memory Card incl. the ejector
③	Terminals of the integrated inputs and outputs
④	Power supply connection
⑤	interface X1 (MPI)
⑥	Mode selector

The figure below shows the integrated digital and analog inputs/outputs of the CPU with open front covers.

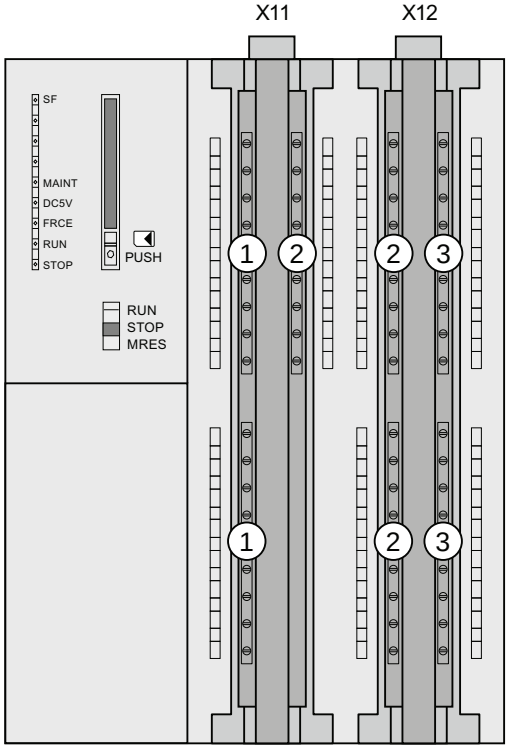

Number	Designation
①	Analog inputs and analog outputs
②	Digital inputs
③	Digital outputs

Status and error indicators

LED designation	Color	Meaning
SF	red	Hardware fault or software error
MAINT	yellow	Maintenance demanded (without function)
DC5V	green	5 V power supply for CPU and S7-300 bus is OK
FRCE	yellow	LED is lit: Active force job LED flashes at 2 Hz: Node flash test function
RUN	green	CPU in RUN mode The LED flashes during start-up at a rate of 2 Hz, and in stop mode at 0.5 Hz
STOP	yellow	CPU in STOP, or HOLD or start-up The LED flashes at a rate of 0.5 Hz when a memory reset is requested, and at 2 Hz during the reset.

Slot for the SIMATIC Micro Memory Card

A SIMATIC Micro Memory Card is used as memory module. You can use an MMC as a load memory and as a portable data carrier.

Note

Since these CPUs do not have an integrated load memory, they require a SIMATIC Micro Memory Card for operation.

Mode selector

Use the mode selector to set the CPU operating mode.

Table 2- 3 Mode selector settings

Setting	Meaning	Explanations
RUN	RUN mode	The CPU executes the user program.
STOP	STOP mode	The CPU does not execute a user program.
MRES	Memory reset	Mode selector setting with pushbutton function for CPU memory reset. A CPU memory reset by means of the mode selector requires a specific sequence of operation.

Power supply connection

All CPUs are equipped with a 2-pin socket for power supply connection. For delivery, the connector with screw terminals is plugged into this inlet at the factory.

Properties of the CPU in relation to interfaces, integrated inputs/outputs and technological functions

Table 2- 4 Properties of the CPUs 313C in relation to interfaces, integrated inputs/outputs and technological functions

Item	CPU 313C
9-pin MPI interface (X1)	Yes
Digital inputs	24
Digital outputs	16
Analog inputs	4 + 1
Analog outputs	2
Technological functions	3 counters (See the technological functions manual terminal assignment (http://support.automation.siemens.com/WW/view/en/26090032))

Reference

- CPU operating state: *STEP 7 online help*
- Information on CPU memory reset: *CPU 31xC and CPU 31x operating instructions, Commissioning, Commissioning Modules, Memory reset by means of Mode Selector of the CPU*
- Evaluation of the LEDs upon error or diagnostic event: *CPU 31xC and CPU 31x Operating Instructions, Test Functions, Diagnostics and Troubleshooting, Diagnostics with the Help of Status and Error LEDs*

2.1.3 Operator controls and indicators: CPU 313C-2 PtP

Operator controls and indicators of the CPU 313C-2 PtP

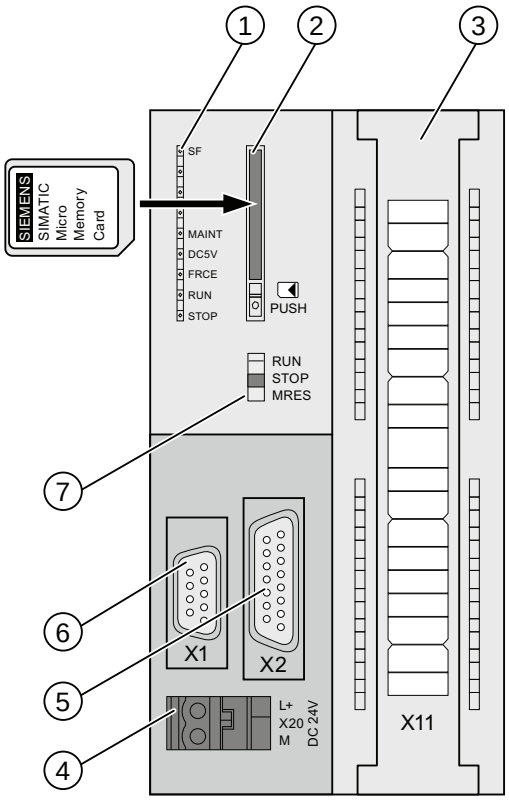

Number	Designation
①	Status and error indicators
②	Slot for the SIMATIC Micro Memory Card incl. the ejector
③	Terminals of the integrated inputs and outputs
④	Power supply connection
⑤	2. Interface X2 (PtP)
⑥	1. interface X1 (MPI)
⑦	Mode selector

The figure below shows the integrated digital inputs/outputs of the CPU with open front doors.

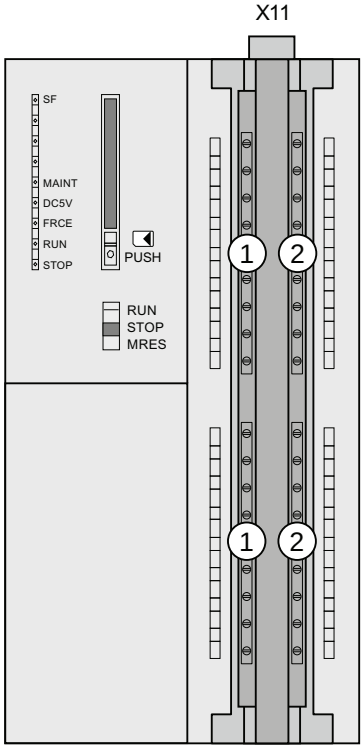

Number	Designation
①	Digital inputs
②	Digital outputs

Status and error indicators

LED designation	Color	Meaning
SF	red	Hardware fault or software error
MAINT	yellow	Maintenance demanded (without function)
DC5V	green	5 V power supply for CPU and S7-300 bus is OK
FRCE	yellow	LED is lit: Active force job LED flashes at 2 Hz: Node flash test function
RUN	green	CPU in RUN mode The LED flashes during start-up at a rate of 2 Hz, and in stop mode at 0.5 Hz
STOP	yellow	CPU in STOP, or HOLD or start-up The LED flashes at a rate of 0.5 Hz when a memory reset is requested, and at 2 Hz during the reset.

Slot for the SIMATIC Micro Memory Card

A SIMATIC Micro Memory Card is used as memory module. You can use an MMC as a load memory and as a portable data carrier.

Note

Since these CPUs do not have an integrated load memory, they require a SIMATIC Micro Memory Card for operation.

Mode selector

Use the mode selector to set the CPU operating mode.

Table 2- 5 Mode selector settings

Setting	Meaning	Explanations
RUN	RUN mode	The CPU executes the user program.
STOP	STOP mode	The CPU does not execute a user program.
MRES	Memory reset	Mode selector setting with pushbutton function for CPU memory reset. A CPU memory reset by means of the mode selector requires a specific sequence of operation.

Power supply connection

All CPUs are equipped with a 2-pin socket for power supply connection. For delivery, the connector with screw terminals is plugged into this inlet at the factory.

Properties of the CPU in relation to interfaces, integrated inputs/outputs and technological functions

Table 2- 6 Properties of the CPUs 313C-2 PtP in relation to interfaces, integrated inputs/outputs and technological functions

Item	CPU 313C-2 PtP
9-pin MPI interface (X1)	Yes
15-pin PtP interface (X2)	Yes
Digital inputs	16
Digital outputs	16
Technological functions	3 counters Point-to-point connection: • ASCII drivers • 3964(R) Protocol (See the technological functions manual terminal assignment (http://support.automation.siemens.com/WW/view/en/26090032))

Reference

- CPU operating state: *STEP 7 online help*
- Information on CPU memory reset: *CPU 31xC and CPU 31x operating instructions, Commissioning, Commissioning Modules, Memory reset by means of Mode Selector of the CPU*
- Evaluation of the LEDs upon error or diagnostic event: *CPU 31xC and CPU 31x Operating Instructions, Test Functions, Diagnostics and Troubleshooting, Diagnostics with the Help of Status and Error LEDs*

2.1.4 Operator controls and indicators: CPU 313C-2 DP

Operator controls and indicators of the CPU 313C-2 DP

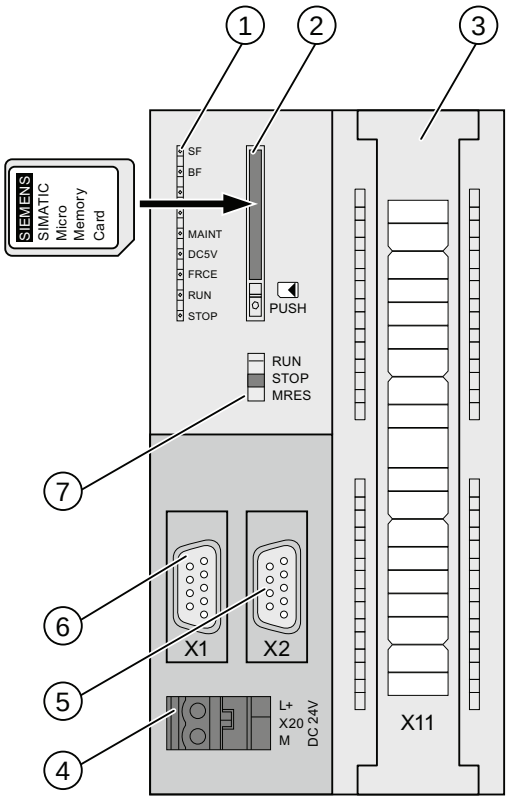

Number	Designation
①	Status and error indicators
②	Slot for the SIMATIC Micro Memory Card incl. the ejector
③	Terminals of the integrated inputs and outputs
④	Power supply connection
⑤	2. interface X2 (DP)
⑥	1. interface X1 (MPI)
⑦	Mode selector

The figure below shows the integrated digital inputs/outputs of the CPU with open front doors.

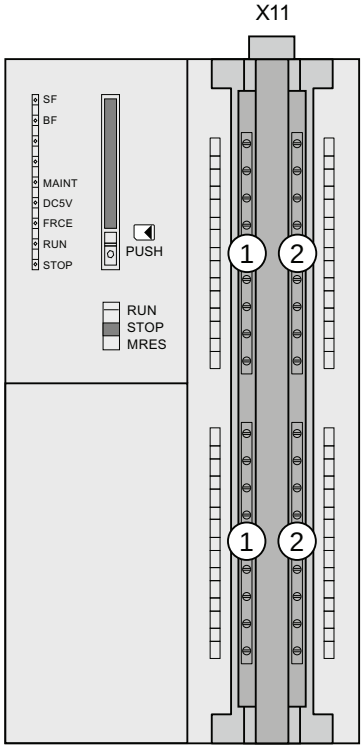

Number	Designation
①	Digital inputs
②	Digital outputs

Status and error indicators

LED designation	Color	Meaning
SF	red	Hardware fault or software error
BF	red	Bus fault
MAINT	yellow	Maintenance demanded (without function)
DC5V	green	5 V power supply for CPU and S7-300 bus is OK
FRCE	yellow	LED is lit: Force job is active LED flashes at 2 Hz: Node flash test function
RUN	green	CPU in RUN mode The LED flashes during start-up at a rate of 2 Hz, and in stop mode at 0.5 Hz
STOP	yellow	CPU in STOP, or HOLD or start-up The LED flashes at a rate of 0.5 Hz when a memory reset is requested, and at 2 Hz during the reset.

Slot for the SIMATIC Micro Memory Card

A SIMATIC Micro Memory Card is used as memory module. You can use an MMC as a load memory and as a portable data carrier.

Note

Since these CPUs do not have an integrated load memory, they require a SIMATIC Micro Memory Card for operation.

Mode selector

Use the mode selector to set the CPU operating mode.

Table 2- 7 Mode selector settings

Setting	Meaning	Explanations
RUN	RUN mode	The CPU executes the user program.
STOP	STOP mode	The CPU does not execute a user program.
MRES	Memory reset	Mode selector setting with pushbutton function for CPU memory reset. A CPU memory reset by means of the mode selector requires a specific sequence of operation.

Power supply connection

All CPUs are equipped with a 2-pin socket for power supply connection. For delivery, the connector with screw terminals is plugged into this inlet at the factory.

Properties of the CPU in relation to interfaces, integrated inputs/outputs and technological functions

Table 2- 8 Properties of the CPU 313C-2 DP in relation to interfaces, integrated inputs/outputs and technological functions

Item	CPU 313C-2 DP
9-pin MPI interface (X1)	Yes
9-pin DP interface (X2)	Yes
Digital inputs	16
Digital outputs	16
Technological functions	3 counters (See the technological functions manual terminal assignment (http://support.automation.siemens.com/WW/view/en/26090032))

Reference

- CPU operating state: *STEP 7 online help*
- Information on CPU memory reset: *CPU 31xC and CPU 31x operating instructions, Commissioning, Commissioning Modules, Memory reset by means of Mode Selector of the CPU*
- Evaluation of the LEDs upon error or diagnostic event: *CPU 31xC and CPU 31x Operating Instructions, Test Functions, Diagnostics and Troubleshooting, Diagnostics with the Help of Status and Error LEDs*

2.1.5 Operator controls and indicators: CPU 314C-2 PtP

Operator controls and indicators of the CPU 314C-2 PtP

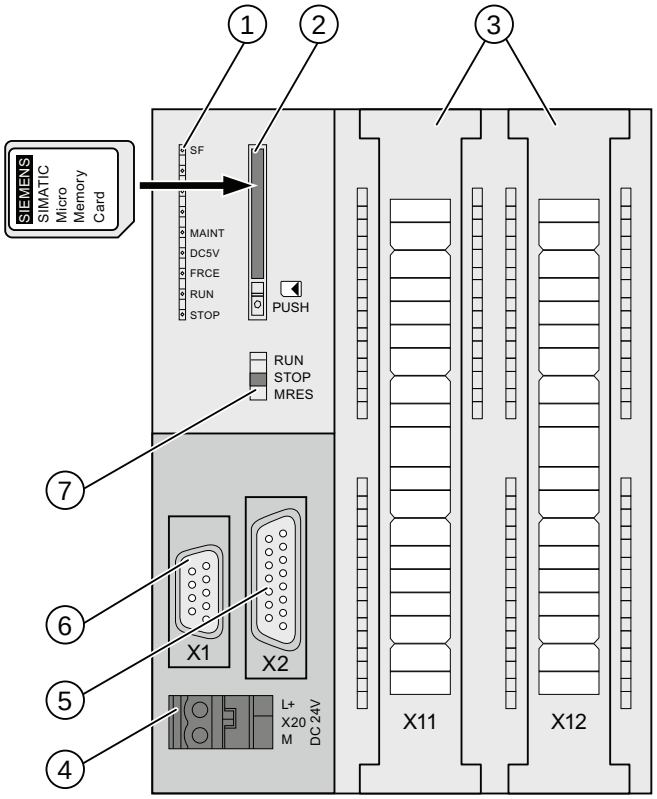

Number	Designation
①	Status and error indicators
②	Slot for the SIMATIC Micro Memory Card incl. the ejector
③	Terminals of the integrated inputs and outputs
④	Power supply connection
⑤	2. Interface X2 (PtP)
⑥	1. interface X1 (MPI)
⑦	Mode selector

The figure below shows the integrated digital and analog inputs/outputs of the CPU with open front covers.

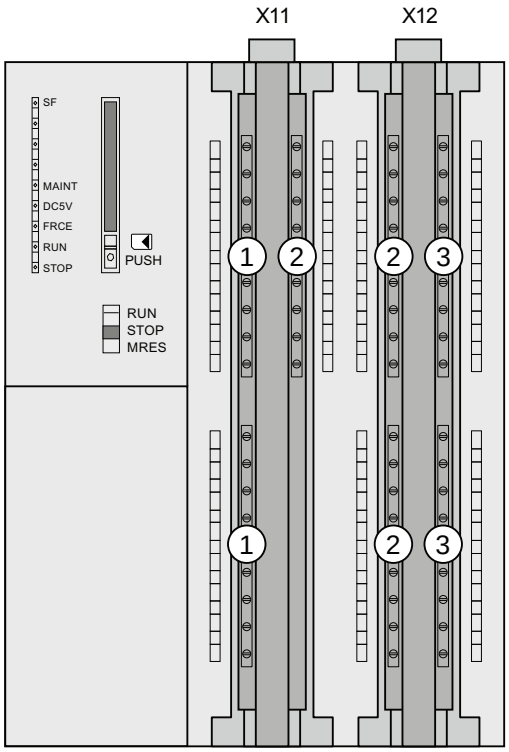

Number	Designation
①	Analog inputs and analog outputs
②	Digital inputs
③	Digital outputs

Status and error indicators

LED designation	Color	Meaning
SF	red	Hardware fault or software error
MAINT	yellow	Maintenance demanded (without function)
DC5V	green	5 V power supply for CPU and S7-300 bus is OK
FRCE	yellow	LED is lit: Active force job LED flashes at 2 Hz: Node flash test function
RUN	green	CPU in RUN mode The LED flashes during start-up at a rate of 2 Hz, and in stop mode at 0.5 Hz
STOP	yellow	CPU in STOP, or HOLD or start-up The LED flashes at a rate of 0.5 Hz when a memory reset is requested, and at 2 Hz during the reset.

Slot for the SIMATIC Micro Memory Card

A SIMATIC Micro Memory Card is used as memory module. You can use an MMC as a load memory and as a portable data carrier.

Note

Since these CPUs do not have an integrated load memory, they require a SIMATIC Micro Memory Card for operation.

Mode selector

Use the mode selector to set the CPU operating mode.

Table 2- 9 Mode selector settings

Setting	Meaning	Explanations
RUN	RUN mode	The CPU executes the user program.
STOP	STOP mode	The CPU does not execute a user program.
MRES	Memory reset	Mode selector setting with pushbutton function for CPU memory reset. A CPU memory reset by means of the mode selector requires a specific sequence of operation.

Power supply connection

All CPUs are equipped with a 2-pin socket for power supply connection. For delivery, the connector with screw terminals is plugged into this inlet at the factory.

Properties of the CPU in relation to interfaces, integrated inputs/outputs and technological functions

Table 2- 10 Properties of the CPUs 314C-2 PtP in relation to interfaces, integrated inputs/outputs and technological functions

Item	CPU 314C-2 PtP
9-pin MPI interface (X1)	Yes
15-pin PtP interface (X2)	Yes
Digital inputs	24
Digital outputs	16
Analog inputs	4 + 1
Analog outputs	2
Technological functions	4 counters 1 channel for positioning Point-to-point connection: • ASCII drivers • 3964(R) Protocol • RK 512 (See the technological functions manual terminal assignment (http://support.automation.siemens.com/WW/view/en/26090032))

Reference

- CPU operating state: *STEP 7 online help*
- Information on CPU memory reset: *CPU 31xC and CPU 31x operating instructions, Commissioning, Commissioning Modules, Memory reset by means of Mode Selector of the CPU*
- Evaluation of the LEDs upon error or diagnostic event: *CPU 31xC and CPU 31x Operating Instructions, Test Functions, Diagnostics and Troubleshooting, Diagnostics with the Help of Status and Error LEDs*

2.1.6 Operator controls and indicators: CPU 314C-2 DP

Operator controls and indicators of the CPU 314C-2 DP

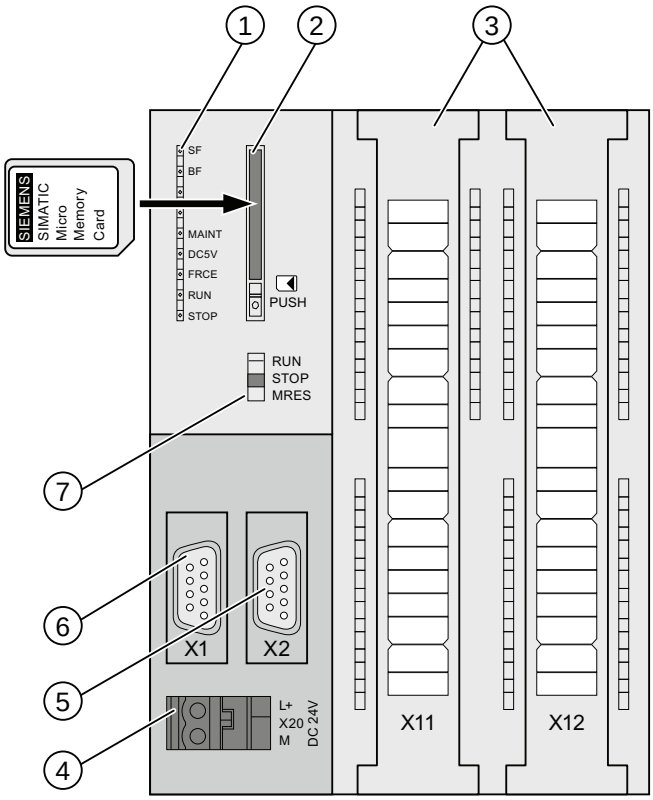

Number	Designation
①	Status and error indicators
②	Slot for the SIMATIC Micro Memory Card incl. the ejector
③	Terminals of the integrated inputs and outputs
④	Power supply connection
⑤	2. interface X2 (DP)
⑥	1. interface X1 (MPI)
⑦	Mode selector

The figure below shows the integrated digital and analog inputs/outputs of the CPU with open front covers.

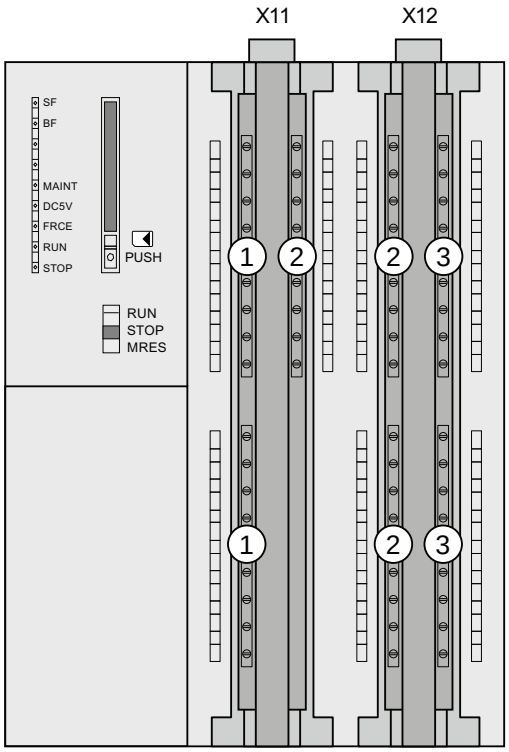

Number	Designation
①	Analog outputs and analog inputs
②	Digital inputs
③	Digital outputs

Status and error indicators

LED designation	Color	Meaning
SF	red	Hardware fault or software error
BF	red	Bus fault
MAINT	yellow	Maintenance demanded (without function)
DC5V	green	5 V power supply for CPU and S7-300 bus is OK
FRCE	yellow	LED is lit: Active force job LED flashes at 2 Hz: Node flash test function
RUN	green	CPU in RUN mode The LED flashes during start-up at a rate of 2 Hz, and in stop mode at 0.5 Hz
STOP	yellow	CPU in STOP, or HOLD or start-up The LED flashes at a rate of 0.5 Hz when a memory reset is requested, and at 2 Hz during the reset.

Slot for the SIMATIC Micro Memory Card

A SIMATIC Micro Memory Card is used as memory module. You can use an MMC as a load memory and as a portable data carrier.

Note

Since these CPUs do not have an integrated load memory, they require a SIMATIC Micro Memory Card for operation.

Mode selector

Use the mode selector to set the CPU operating mode.

Table 2- 11 Mode selector settings

Setting	Meaning	Explanations
RUN	RUN mode	The CPU executes the user program.
STOP	STOP mode	The CPU does not execute a user program.
MRES	Memory reset	Mode selector setting with pushbutton function for CPU memory reset. A CPU memory reset by means of the mode selector requires a specific sequence of operation.

Power supply connection

All CPUs are equipped with a 2-pin socket for power supply connection. For delivery, the connector with screw terminals is plugged into this inlet at the factory.

Properties of the CPU in relation to interfaces, integrated inputs/outputs and technological functions

Table 2- 12 Properties of the CPUs 314C-2 DP in relation to interfaces, integrated inputs/outputs and technological functions

Item	CPU 314C-2 DP
9-pin MPI interface (X1)	Yes
9-pin DP interface (X2)	Yes
Digital inputs	24
Digital outputs	16
Analog inputs	4 + 1
Analog outputs	2
Technological functions	4 counters 1 channel for positioning (See the technological functions manual terminal assignment (http://support.automation.siemens.com/WW/view/en/26090032))

Reference

- CPU operating state: *STEP 7 online help*
- Information on CPU memory reset: *CPU 31xC and CPU 31x operating instructions, Commissioning, Commissioning Modules, Memory reset by means of Mode Selector of the CPU*
- Evaluation of the LEDs upon error or diagnostic event: *CPU 31xC and CPU 31x Operating Instructions, Test Functions, Diagnostics and Troubleshooting, Diagnostics with the Help of Status and Error LEDs*

2.1.7 Operator controls and indicators: CPU 314C-2 PN/DP

Operator controls and indicators: CPU 314C-2 PN/DP

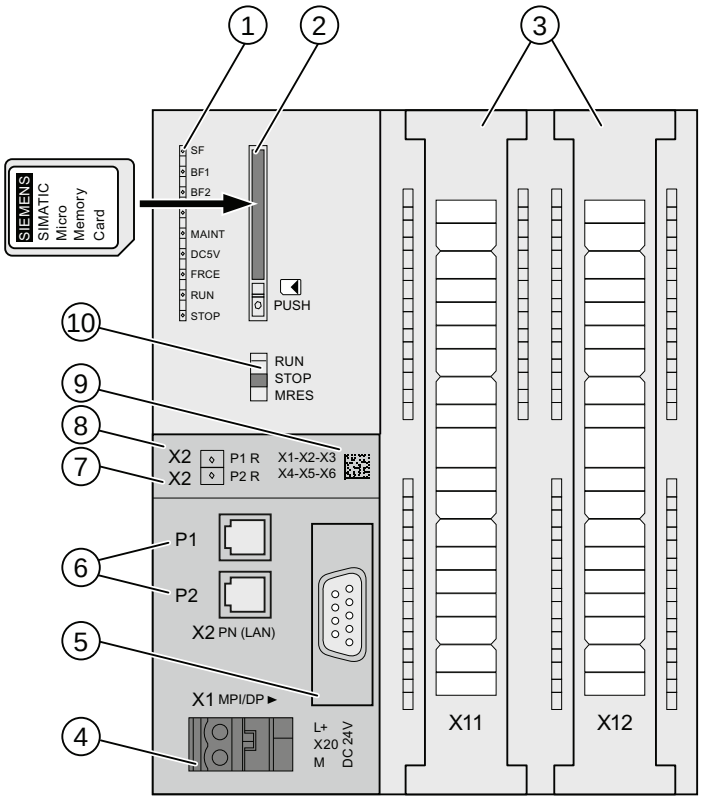

Number	Description
①	Status and error indicators
②	Slot for the SIMATIC Micro Memory Card incl. the ejector
③	Terminals of the integrated inputs and outputs
④	Power supply connection
⑤	1. interface X1 (MPI/DP)
⑥	2. Interface X2 (PN), with dual-port switch
⑦	PROFINET Port 2 The Port 2 status is signaled using a dual-color LED (green/yellow): • LED lit green: LINK to a partner is active • LED changes to yellow: active data traffic (RX/TX) R: Ring port for setting up a ring topology with media redundancy
⑧	PROFINET Port 1 The Port 1 status is signaled using a dual-color LED (green/yellow): • LED lit green: LINK to a partner is active • LED changes to yellow: active data traffic (RX/TX) R: Ring port for setting up a ring topology with media redundancy
⑨	MAC address and 2D bar code
⑩	Mode selector

The figure below shows the locations of the integrated digital and analog inputs/outputs of the CPU with open front covers.

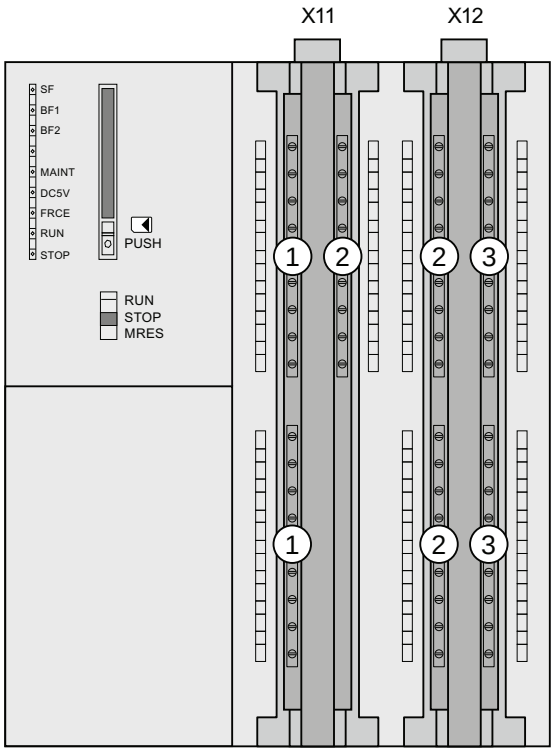

Number	Designation
①	Analog inputs and analog outputs
②	Digital inputs
③	Digital outputs

Status and error indicators

LED designation	Color	Meaning
SF	red	Hardware fault or software error
BF1	red	Bus error at the first interface (X1)
BF2	red	Bus error at the second interface (X2)
MAINT	yellow	Maintenance demanded status is pending
DC5V	green	5 V power supply for CPU and S7-300 bus is OK
FRCE	yellow	LED is lit: Active force job LED flashes at 2 Hz: Node flash test function
RUN	green	CPU in RUN mode The LED flashes during start-up at a rate of 2 Hz, and in stop mode at 0.5 Hz
STOP	yellow	CPU in STOP, or HOLD or start-up The LED flashes at a rate of 0.5 Hz when a memory reset is requested, and at 2 Hz during the reset.

Slot for the SIMATIC Micro Memory Card

A SIMATIC Micro Memory Card is used as memory module. You can use an MMC as a load memory and as a portable data carrier.

Note

Since these CPUs do not have an integrated load memory, they require a SIMATIC Micro Memory Card for operation.

Mode selector

Use the mode selector to set the CPU operating mode.

Table 2- 13 Mode selector settings

Setting	Meaning	Explanations
RUN	RUN mode	The CPU executes the user program.
STOP	STOP mode	The CPU does not execute a user program.
MRES	Memory reset	Mode selector setting with pushbutton function for CPU memory reset. A CPU memory reset by means of the mode selector requires a specific sequence of operation.

Power supply connection

All CPUs are equipped with a 2-pin socket for power supply connection. For delivery, the connector with screw terminals is plugged into this inlet at the factory.

Properties of the CPU in relation to interfaces, integrated inputs/outputs and technological functions

Table 2- 14 Properties of the CPUs 314C-2 PN/DP in relation to interfaces, integrated inputs/outputs and technological functions

Item	CPU 314C-2 PN/DP
9-pin MPI/DP interface (X1)	Yes
PN interface with 2-port switch (X2)	Yes
Digital inputs	24
Digital outputs	16
Analog inputs	4 + 1
Analog outputs	2
Technological functions	4 counters 1 channel for positioning (see the Technological functions manual terminal assignment (http://support.automation.siemens.com/WW/view/en/26090032))

Reference

- CPU operating state: *STEP 7 online help*
- Information on CPU memory reset: *CPU 31xC and CPU 31x operating instructions, Commissioning, Commissioning Modules, Memory reset by means of Mode Selector of the CPU*
- Evaluation of the LEDs upon error or diagnostic event: *CPU 31xC and CPU 31x Operating Instructions, Test Functions, Diagnostics and Troubleshooting, Diagnostics with the Help of Status and Error LEDs*

2.2 Operator controls and indicators of the standard CPUs (CPU 31x)

2.2.1 Operator controls and indicators: CPU 312 and CPU 314

Operator controls and indicators of the CPU 312 and CPU 314

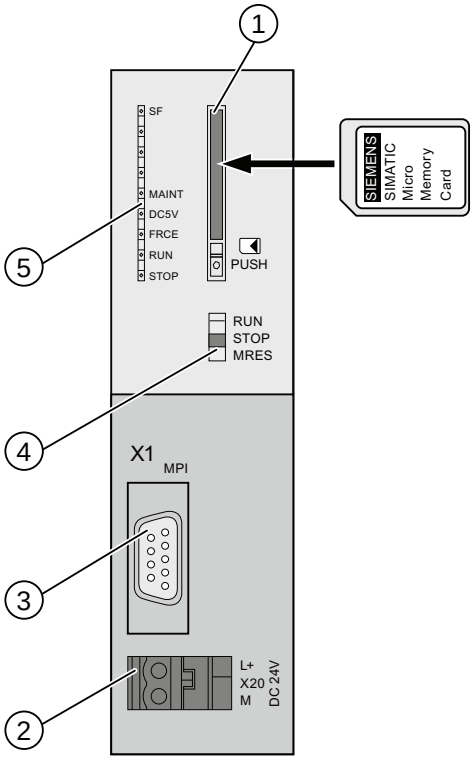

Number	Designation
①	Slot for the SIMATIC Micro Memory Card incl. the ejector
②	Power supply connection
③	interface X1 (MPI)
④	Mode selector
⑤	Status and error indicators

Status and error indicators

LED designation	Color	Meaning
SF	red	Hardware fault or software error
MAINT	yellow	Maintenance demanded (without function)
DC5V	green	5 V power supply for the CPU and S7-300 bus
FRCE	yellow	LED is lit: Active force job LED flashes at 2 Hz: Node flash test function
RUN	green	CPU in RUN The LED flashes during start-up at a rate of 2 Hz, and in stop mode at 0.5 Hz
STOP	yellow	CPU in STOP or HOLD, or STARTUP mode The LED flashes at a rate of 0.5 Hz when a memory reset is requested, and at 2 Hz during the reset.

Slot for the SIMATIC Micro Memory Card

A SIMATIC Micro Memory Card is used as memory module. You can use an MMC as a load memory and as a portable data carrier.

Note

Since these CPUs do not have an integrated load memory, they require a SIMATIC Micro Memory Card for operation.

Mode selector

The mode selector switch is used to set the CPU operating mode.

Table 2- 15 Mode selector settings

Setting	Meaning	Explanations
RUN	RUN mode	The CPU executes the user program.
STOP	STOP mode	The CPU does not execute a user program.
MRES	Memory reset	Mode selector setting with pushbutton function for CPU memory reset. A CPU memory reset by means of the mode selector requires a specific sequence of operation.

Power supply connection

All CPUs are equipped with a 2-pin socket for power supply connection. For delivery, the connector with screw terminals is plugged into this inlet at the factory.

Reference

- CPU operating state: *STEP 7 online help*
- Information on CPU memory reset: *CPU 31xC and CPU 31x operating instructions, Commissioning, Commissioning Modules, Memory reset by means of Mode Selector of the CPU*
- Evaluation of the LEDs upon error or diagnostic event: *CPU 31xC and CPU 31x Operating Instructions, Test Functions, Diagnostics and Troubleshooting, Diagnostics with the Help of Status and Error LEDs*

2.2.2 Operator controls and indicators: CPU 315-2 DP and CPU 317-2 DP

Operator controls and indicators of CPU 315-2 DP and CPU 317-2 DP

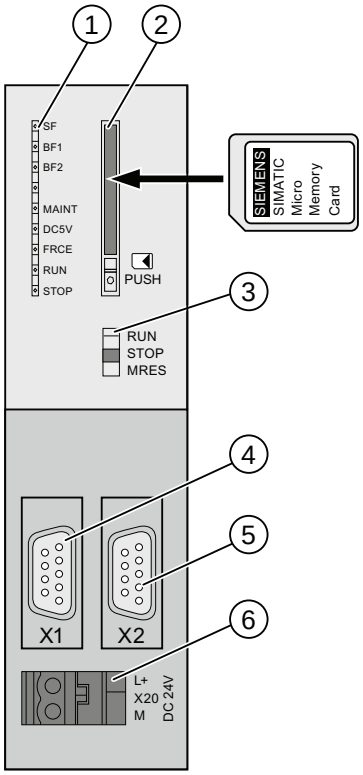

Number	Description		
①	Status and error indicators:	CPU 315-2 DP has only one bus fault LED: CPU 317-2 DP has two bus fault LEDs:	BF BF1 and BF 2
②	Slot for the SIMATIC Micro Memory Card incl. the ejector		
③	Mode selector		
④	1. Interface X1 (MPI for CPU 315-2 DP, MPI/DP for CPU 317-2 DP)		
⑤	2. interface X2 (DP)		
⑥	Power supply connection		

Status and error indicators of the CPU 315-2 DP

LED designation	Color	Meaning
SF	red	Hardware fault or software error
BF	red	Bus error at the DP interface (X2)
MAINT	yellow	Maintenance demanded (without function)
DC5V	green	5 V power supply for the CPU and S7-300 bus
FRCE	yellow	LED is lit: Active force job LED flashes at 2 Hz: Node flash test function
RUN	green	CPU in RUN The LED flashes during start-up at a rate of 2 Hz, and in stop mode at 0.5 Hz
STOP	yellow	CPU in STOP or HOLD, or STARTUP mode The LED flashes at a rate of 0.5 Hz when a memory reset is requested, and at 2 Hz during the reset.

Status and error indicators of the CPU 317-2 DP

LED designation	Color	Meaning
SF	red	Hardware fault or software error
BF1	red	Bus error at the first interface (X1)
BF2	red	Bus error at the second interface (X2)
MAINT	yellow	Maintenance demanded (without function)
DC5V	green	5 V power supply for the CPU and S7-300 bus
FRCE	yellow	LED is lit: Active force job LED flashes at 2 Hz: Node flash test function
RUN	green	CPU in RUN The LED flashes during start-up at a rate of 2 Hz, and in stop mode at 0.5 Hz
STOP	yellow	CPU in STOP or HOLD, or STARTUP mode The LED flashes at a rate of 0.5 Hz when a memory reset is requested, and at 2 Hz during the reset.

Slot for the SIMATIC Micro Memory Card

A SIMATIC Micro Memory Card is used as memory module. You can use an MMC as a load memory and as a portable data carrier.

Note

Since these CPUs do not have an integrated load memory, they require a SIMATIC Micro Memory Card for operation.

Mode selector

Use the mode selector to set the CPU operating mode:

Table 2- 16 Mode selector settings

Setting	Meaning	Explanations
RUN	RUN mode	The CPU executes the user program.
STOP	STOP mode	The CPU does not execute a user program.
MRES	Memory reset	Mode selector setting with pushbutton function for CPU memory reset. A CPU memory reset by means of the mode selector requires a specific sequence of operation.

Power supply connection

All CPUs are equipped with a 2-pin socket for power supply connection. For delivery, the connector with screw terminals is plugged into this inlet at the factory.

Reference

- CPU operating state: *STEP 7 online help*
- Information on CPU memory reset: *CPU 31xC and CPU 31x operating instructions, Commissioning, Commissioning Modules, Memory reset by means of Mode Selector of the CPU*
- Evaluation of the LEDs upon error or diagnostic event: *CPU 31xC and CPU 31x Operating Instructions, Test Functions, Diagnostics and Troubleshooting, Diagnostics with the Help of Status and Error LEDs*

2.2.3 Operator controls and indicators: CPU 315-2 PN/DP and CPU 317-2 PN/DP

Operator controls and indicators of CPU 315-2 PN/DP and CPU 317-2 PN/DP

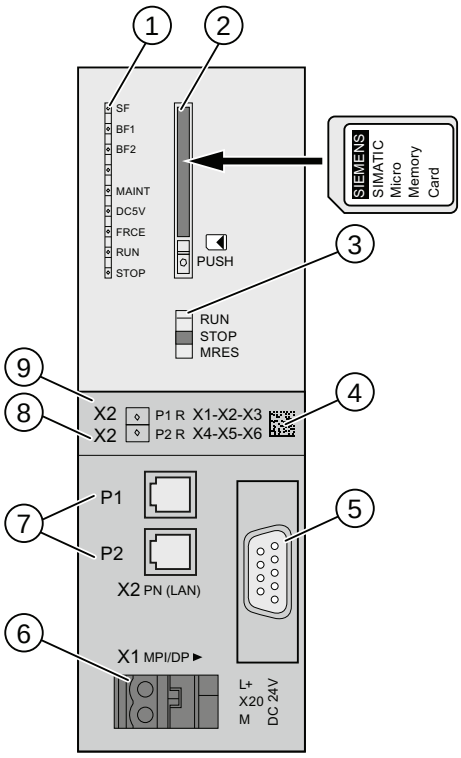

Number	Description
①	Status and error indicators
②	Slot for the SIMATIC Micro Memory Card incl. the ejector
③	Mode selector
④	MAC address and 2D bar code
⑤	1. interface X1 (MPI/DP)
⑥	Power supply connection
⑦	2. Interface X2 (PN), with dual-port switch
⑧	PROFINET Port 2 The Port 2 status is signaled using a dual-color LED (green/yellow): • LED lit green: LINK to a partner is active • LED changes to yellow: active data traffic (RX/TX) R: Ring port for setting up a ring topology with media redundancy
⑨	PROFINET Port 1 The Port 1 status is signaled using a dual-color LED (green/yellow): • LED lit green: LINK to a partner is active • LED changes to yellow: active data traffic (RX/TX) R: Ring port for setting up a ring topology with media redundancy

Status and error indicators

LED designation	Color	Meaning
SF	red	Hardware fault or software error
BF1	red	Bus error at the first interface (X1)
BF2	red	Bus error at the second interface (X2)
LINK/RX/TX	green	Connection is active at the relevant port
	yellow	Receiving/transmitting data at the relevant port
MAINT	yellow	Maintenance demanded
DC5V	green	5 V power supply for the CPU and S7-300 bus
FRCE	yellow	LED is lit: Active force job LED flashes at 2 Hz: Node flash test function
RUN	green	CPU in RUN The LED flashes during start-up at a rate of 2 Hz, and in stop mode at 0.5 Hz
STOP	yellow	CPU in STOP or HOLD, or STARTUP mode The LED flashes at a rate of 0.5 Hz when a memory reset is requested, and at 2 Hz during the reset.

Slot for the SIMATIC Micro Memory Card

A SIMATIC Micro Memory Card is used as memory module. You can use an MMC as a load memory and as a portable data carrier.

Note

Since these CPUs do not have an integrated load memory, they require a SIMATIC Micro Memory Card for operation.

Mode selector

You can use the mode selector switch to set the current operating mode of the CPU.

Table 2- 17 Mode selector settings

Setting	Meaning	Explanations
RUN	RUN mode	The CPU executes the user program.
STOP	STOP mode	The CPU does not execute a user program.
MRES	Memory reset	Mode selector setting with pushbutton function for CPU memory reset. A CPU memory reset by means of the mode selector requires a specific sequence of operation.

Power supply connection

All CPUs are equipped with a 2-pin socket for power supply connection. For delivery, the connector with screw terminals is plugged into this inlet at the factory.

Reference

- CPU operating state: *STEP 7 online help*
- Information on CPU memory reset: *CPU 31xC and CPU 31x operating instructions, Commissioning, Commissioning Modules, Memory reset by means of Mode Selector of the CPU*
- Evaluation of the LEDs upon error or diagnostic event: *CPU 31xC and CPU 31x Operating Instructions, Test Functions, Diagnostics and Troubleshooting, Diagnostics with the Help of Status and Error LEDs*

2.2.4 Operator controls and indicators: CPU 319-3 PN/DP

Operator controls and indicators

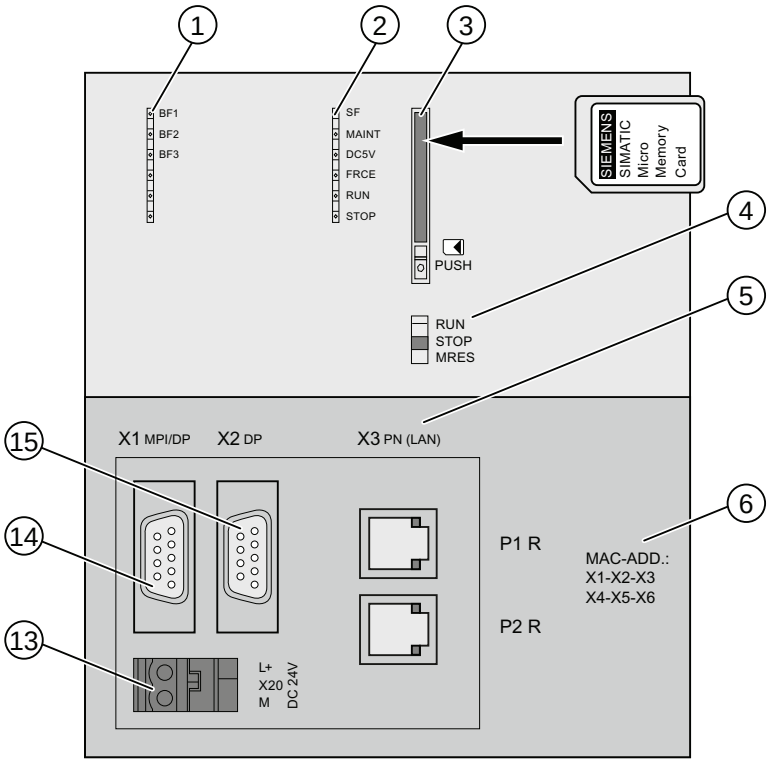

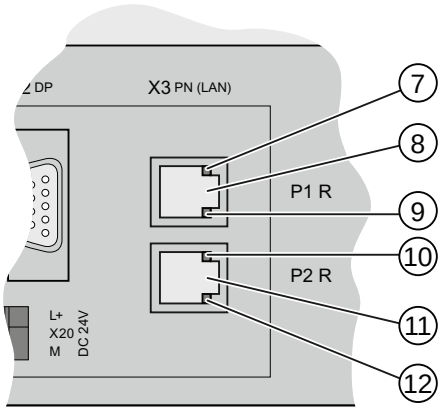

Number	Designation
①	Bus error indicators
②	Status and error indicators
③	Slot for the SIMATIC Micro Memory Card incl. the ejector
④	Mode selector
⑤	3. Interface X3 (PN), with dual-port switch
⑥	MAC address
⑦	Green LED - Port 1 LED designation: LINK LED lit green: LINK to a partner is active
⑧	PROFINET- Port 1 R: Ring port for setting up a ring topology with media redundancy
⑨	Yellow LED - Port 1 LED designation: RX/TX LED lit yellow: active data traffic (RX/TX)
⑩	Green LED - Port 2 LED designation: LINK LED lit green: LINK to a partner is active
⑪	PROFINET- Port 2 R: Ring port for setting up a ring topology with media redundancy
⑫	Yellow LED - Port 2 LED designation: RX/TX LED lit yellow: active data traffic (RX/TX)
⑬	Power supply connection
⑭	1. interface X1 (MPI/DP)
⑮	2. interface X2 (DP)

Status and error indicators

LED designation	Color	Meaning
SF	red	Hardware fault or software error
BF1	red	Bus error at the first interface (X1)
BF2	red	Bus error at the second interface (X2)
BF3	red	Bus error at the third interface (X3)
LINK[1]	green	Connection is active at the relevant port of the third interface (X3)
RX/TX[1]	yellow	Receiving/transmitting data at the relevant port of the third interface (X3)
MAINT	yellow	Maintenance demanded
DC5V	green	5 V power supply for the CPU and S7-300 bus
FRCE	yellow	LED is lit: Active force job LED flashes at 2 Hz: Node flash test function
RUN	green	CPU in RUN The LED flashes during start-up at a rate of 2 Hz, and in stop mode at 0.5 Hz
STOP	yellow	CPU in STOP or HOLD, or STARTUP mode The LED flashes at a rate of 0.5 Hz when a memory reset is requested, and at 2 Hz during the reset.

[1] With the CPU 319-3 PN/DP, the LEDs are located directly at the RJ45 sockets and are not labeled.

Slot for the SIMATIC Micro Memory Card

A SIMATIC Micro Memory Card is used as memory module. You can use an MMC as a load memory and as a portable data carrier.

Note

Since these CPUs do not have an integrated load memory, they require a SIMATIC Micro Memory Card for operation.

Mode selector

You can use the mode selector switch to set the current operating mode of the CPU.

Table 2- 18 Mode selector settings

Setting	Meaning	Explanations
RUN	RUN mode	The CPU executes the user program.
STOP	STOP mode	The CPU does not execute a user program.
MRES	Memory reset	Mode selector setting with pushbutton function for CPU memory reset. A CPU memory reset by means of the mode selector requires a specific sequence of operation.

Power supply connection

All CPUs are equipped with a 2-pin socket for power supply connection. For delivery, the connector with screw terminals is plugged into this inlet at the factory.

Reference

- CPU operating state: *STEP 7 online help*
- Information on CPU memory reset: *CPU 31xC and CPU 31x operating instructions, Commissioning, Commissioning Modules, Memory reset by means of Mode Selector of the CPU*
- Evaluation of the LEDs upon error or diagnostic event: *CPU 31xC and CPU 31x Operating Instructions, Test Functions, Diagnostics and Troubleshooting, Diagnostics with the Help of Status and Error LEDs*

Communication 3

3.1 Interfaces

3.1.1 Multi-Point Interface (MPI)

Availability

All the CPUs described here are equipped with an MPI interface

A CPU equipped with an MPI/DP interface is configured and supplied as MPI interface.

Properties

The MPI (Multi-Point Interface) represents the CPU interface for PG/OP connections, or for communication on an MPI subnet.

The default baud rate of all CPUs is 187.5 kbps. You can also set 19.2 kbps for communication with an S7-200. Baud rates up to max. 12 Mbps are possible with the CPU 314C-2 PN/DP, CPU 315-2 PN/DP, CPU 317-2 and with the CPU 319-3 PN/DP.

The CPU automatically broadcasts its bus configuration via the MPI interface (the transmission rate, for example). A PG, for example, can thus receive the correct parameters and automatically connect to a MPI subnet.

Devices capable of MPI communication

- PG/PC
- OP/TP
- S7-300 / S7-400 with MPI interface
- S7-200 (only at 19.2 kbps)

NOTICE
You may only connect PGs to an MPI subnet which is in RUN. Do not connect other stations (for example, OP, TP) to the MPI subnet while the system is running. Otherwise, transferred data might be corrupted as a result of interference, or global data packages may be lost.

Clock synchronization

The CPU's MPI interface supports clock synchronization. Detailed information is available in the*Manual CPU 31x and CPU 31x, Technical specifications, section Clock synchronization*.

3.1.2 PROFIBUS DP

Availability

CPUs with the "DP" have at least one DP interface.

The CPU 314C-2 PN/DP, CPU 315-2 PN/DP and the CPU 317-2 PN/DP feature one MPI/DP interface. The 317-2 DP and 319-3 PN/DP CPUs feature an MPI/DP interface plus an additional DP interface. The factory setting of the CPU's MPI/DP interface is MPI mode. You need to set DP mode in STEP 7 if you want to use the DP interface.

Operating modes for CPUs with two DP interfaces

Table 3- 1 Operating modes for CPUs with two DP interfaces

MPI/DP interface	PROFIBUS DP interface
• MPI • DP master • DP slave [1]	• not configured • DP master • DP slave [1]

[1] simultaneous operation of the DP slave on both interfaces is excluded

Properties

The PROFIBUS DP interface is mainly used to connect distributed I/O. PROFIBUS DP allows you to create large subnets, for example.

The PROFIBUS DP interface can be configured for operation in master or slave mode, and supports transmission rates up to 12 Mbps

The CPU broadcasts its bus parameters (transmission rate, for example) via the PROFIBUS DP interface when master mode is set. This functionality automatically provides the correct parameters for online operation of a programming device, for example. In your configuration you can specify to disable bus parameter broadcasting.

Note

(for DP interface in slave mode only)

When you disable the "Test, Commissioning, Routing" check box in the DP interface properties dialog box in STEP 7, the transmission rate settings of the master automatically override corresponding user-specific settings. This disables the routing function at this interface.

Devices capable of PROFIBUS DP communication

- PG/PC
- OP/TP
- DP slaves
- DP master
- Actuators/Sensors
- S7-300/S7-400 with PROFIBUS DP interface

Clock synchronization

Clock synchronization is possible via the CPU's PROFIBUS DP interface. Detailed information is available in the manual *CPU 31x and CPU 31x Manual, Technical specifications, Clock synchronization section*.

Reference

Additional information on the PROFIBUS can be found on the Internet (http://www.profibus.com).

3.1.3 PROFINET

CPUs with name suffix "PN" are equipped with a PROFINET interface.

The PROFINET interface on CPU31x PN/DP V3.1 or higher is equipped with an integrated dual-port switch.

Special features of PROFINET devices with integrated switch:

- System configuration in line topology is possible
- You can set up a ring topology using Ports 1 and 2 which are identified as ring ports (P1 R, P2 R)
- Connecting a programming device or an HMI device without additional switch

Compatibility with CPUs < V3.1

You can continue to use your existing CPU configuration even after replacing a CPU < V3.1 with a dual-port CPU.

The following rules apply:

- The Ethernet cable to the RJ45 connector must be inserted in **Port 1** of the new CPU.

  Port 1 handles the port configuration of the PROFINET interface within the CPU configuration. Assuming you set up a fixed transmission mode and disabled Autonegotiation in the existing CPU configuration, then Port 1 continues to be used as terminal device port instead of being operated as switch port. The CPU interface continues to function, but as a switch, i.e. the forwarding of the Ethernet frames from one port to the other is ensured

- **Port 2** starts up with default parameters

Special features for migration with unchanged CPU configuration:

- **Port 2** cannot be analyzed because it starts up with default parameters without being assigned a separate diagnostics address

---

Note

To enable diagnostics and reconfiguration of Port 2 as well (e.g. configuration of interrelations, or of the transmission medium/duplex mode), you must replace the old with the new CPU in HW Config.

Connecting to Industrial Ethernet

You can use the integrated PROFINET interface of the CPU to establish a connection to Industrial Ethernet.

The integrated PROFINET interface of the CPU can be configured via an MPI or the PROFINET interface.

Devices which can be connected via PROFINET (PN)

- PROFINET IO Controller
- PROFINET IO Devices (e.g. IM 151-3 PN interface module in an ET 200S)
- PROFINET CBA components
- S7-300/S7-400 with PROFINET interface (e.g. CPU 317-2 PN/DP or CP 343-1)
- Active network components (a switch, for example)
- PG/PC with Ethernet card
- IE/PB link

Properties of the PROFINET interface

Properties	
IEEE standard	802.3
Connector design	2 X RJ45
	Dual-port switch (CPUs V3.1 or higher)
Transmission rate	Max. 100 Mbps
Media	Twisted Pair Cat5 (100 BASE-TX)
Media redundancy	in accordance with IEC 61158

Note

Networking PROFINET components

The use of switches, rather than hubs, for networking PROFINET components brings about a substantial improvement in decoupling bus traffic and improves runtime performance especially under higher bus load. PROFINET CBA with cyclic PROFINET interconnections requires the use of switches in order to maintain compliance with performance specifications. Full-duplex mode at 100 Mbit is mandatory for cyclic PROFINET interconnections.

PROFINET IO also requires the use of switches and 100 Mbit full-duplex mode. In the case of a PROFINET IO in IRT mode, all the PROFINET devices, including the switches, must be IRT-capable in the synchronization domain.

Addressing the ports

To diagnose the individual ports of a PROFINET interface, these ports must each have a separate diagnostics address. Addressing takes place in HW-Config.
For additional information, refer to the *PROFINET System Description* system manual.

To diagnose any detected problems in the user program, diagnostics messages (error and maintenance information) can be enabled using OB 82 (enable set in HW-Config) and then evaluated, for example, by means of SFB 54. There are also various data records (read-out using SFB 52) and system status lists (read-out using SFC 51) provided for more detailed diagnostics.

Diagnostics is also possible in *STEP 7* (e.g. communication diagnostics, network connection, Ethernet statistics, IP parameters).

Send clock and update time

Controllers and devices can be operated on a PROFINET IO subnet with a uniform send clock. If a device does not support the faster send clock times of a controller, the send clock is adapted to the possible send clock of the device. This means, for example, that devices operating with a send clock of 250 µs as well as 1 ms can operate on a CPU 319-3 PN/DP (IO controller), which operates with a send clock of 250 µs.

You can parameterize the update time of devices within a relatively wide range. This again depends on the send clock.

Update times for CPU 31x PN/DP

The following update times can be parameterized:

Real-time communication	Send clock		Update time
For RT:	250 µs	⇒	250 µs to 128 ms
	500 µs	⇒	500 µs to 256 ms
	1 ms	⇒	1 ms to 512 ms
	2 ms	⇒	2 ms to 512 ms
	4 ms	⇒	4 ms to 512 ms
For IRT with "high flexibility" option:	250 µs	⇒	250 µs to 128 ms
	500 µs	⇒	500 µs to 256 ms
	1 ms	⇒	1 ms to 512 ms
For IRT with "high performance" option:	250 µs	⇒	250 µs to 4 ms
	500 µs	⇒	500 µs to 8 ms
	1 ms	⇒	1 ms to 16 ms
	2 ms	⇒	2 ms to 32 ms
	4 ms	⇒	4 ms to 64 ms

The minimum update time is determined by the number of devices used, by the volume of configured user data, and by the time slice for PROFINET IO communication. *STEP 7* automatically makes allowances for these dependencies in your system configuration.

Odd number of send clocks for IRT with "high performance" option:

In addition to the "even-numbered" send clocks (250 µs,
500 µs, 1 ms, 2 ms, 4 ms), you can set any multiple of 125 ms as "odd-numbered" send clock in the range from 250 µs and 4 ms for IRT with "high performance" option: 375 µs, 625 µs ... 3.875 ms

For "odd-numbered" send clocks, the following rule applies to all PROFINET IO devices:

- Update time = send clock
- IRT with "high performance" cannot be supplemented by means of RT devices

NOTICE
On CPUs with an integrated switch, memory resets/firmware updates/power-offs cause an interruption of communication. Note that the PROFINET interface and integrated switch are shut down during CPU memory reset and firmware updates, or after POWER OFF. At a CPU configured for operation in a line topology, communication is shut down to the following devices.

Reference

- For instructions on how to configure the integrated PROFINET interface, refer to the *S7-300, CPU 31xC and CPU 31x Setup operating instructions*.
- For more information about PROFINET functionality, refer to the PROFINET System Description (http://support.automation.siemens.com/WW/view/en/19292127).
- For detailed information on Ethernet networks, network configuration and network components, refer to the *SIMATIC NET Manual: Twisted-pair and fiber-optic networks*, on the Internet (http://support.automation.siemens.com/WW/view/en/8763736).
- For detailed information on CBA, refer to the *Tutorial Component Based Automation, Commissioning Systems* on the Internet (http://support.automation.siemens.com/WW/view/en/18403908).
- Additional information about PROFINET can be found on the Internet (http://www.profibus.com).

3.1.3.1 Configuring the port properties

Configuring the port properties of the PROFINET interface in *STEP 7*

The PROFINET interfaces in our devices are preset to "automatic setting" (Autonegotiation). Verify that all devices connected to the PROFINET interface of CPU 31x PN/DP are also set to the "Autonegotiation" mode. This is the default setting of standard PROFINET/Ethernet components.

If you connect a device that does not support the "automatic setting" (Autonegotiation) mode to the PROFINET interface of CPU 31x PN/DP, or select a setting in addition to the "automatic setting" (Autonegotiation) mode, note the following:

- PROFINET IO and PROFINET CBA require operation at 100 Mbps full-duplex, i.e. if the PROFINET interface of CPU 31x PN/DP is used simultaneously for communication on PROFINET IO / CBA and Ethernet, the interface must be set to 100 Mbps full-duplex mode in addition to the "automatic setting" (Autonegotiation).
- If the PROFINET interface of CPU 31x PN/DP is used only for Ethernet communication, 10 Mbps or 100 Mbps full-duplex mode can be set in addition to the "automatic setting" (Autonegotiation). Setting half-duplex mode is not permitted in any situation.

Reason: If "Autonegotiation" is set and a switch that is permanently set to "10 Mbps half-duplex" is connected to the PROFINET interface of CPU 31x PN/DP, the CPU adapts its settings to the partner device settings, that is, communication is actually handled in "10 Mbps half-duplex" mode. However, since PROFINET IO and PROFINET CBA require operation with 100 Mbps full-duplex, this operating mode is not allowed.

Note

For additional information about configuring the ports of IO devices that are to carry out a prioritized startup, refer to the special notes in the *PROFINET System Description*.

Disabling the port of a PROFINET interface

You can disable a port of the PROFINET interface in HW Config of *STEP 7*. By default it is activated.

The CPU cannot be addressed at a disabled port of the PROFINET interface.

Take into account that no communication functions such as programming device/OP functions, open IE communication, or S7 communication are possible via a deactivated port.

Addressing the ports

To diagnose the individual ports of a PROFINET interface, these ports must each have a separate diagnostics address. The addressing is done in HW-Config.
For additional information, refer to the *PROFINET System Description*.

To diagnose any detected problems in the user program, diagnostics messages (error and maintenance information) can be enabled using OB 82 (enable set in HW-Config) and then evaluated, for example, by means of SFB 54. There are also various data records (read-out using SFB 52) and system status lists (read-out using SFC 51) provided for more detailed diagnostics.

Diagnostics is also possible in *STEP 7* (e.g. communication diagnostics, network connection, Ethernet statistics, IP parameters).

3.1.4 Point-to-point (PtP)

Availability

CPUs with the "PtP" name suffix have at least one PtP interface.

Properties

Using the PtP interface of your CPU, you can connect external devices with serial interface. You can operate such a system at transmission rates up to 19.2 kbps in full duplex mode (RS 422), and up to 38.4 kbps in half duplex mode (RS 485).

Baud rate

- Half duplex: 38,4 kbps
- Full duplex: 19,2 kbps

Drivers

PtP communication drivers installed in those CPUs:

- ASCII drivers
- 3964(R) Protocol
- RK 512 (CPU 314C-2 PtP only)

Devices capable of PtP communication

Devices equipped with a serial port, for example, barcode readers, printers, etc.

Reference

CPU 31xC: Technological functions manual

3.2 Communication services

3.2.1 Overview of communication services

Selecting the communication service

You need to decide on a communication service based on the required functionality. Your choice of communication service determines

- the available functionality
- whether an S7 connection is required or not
- the time of connecting

The user interfaces can vary considerably (SFC, SFB, etc.) and is also determined by the hardware used (SIMATIC CPU, PC, etc.).

Overview of communication services

The table below provides an overview of communication services offered by the CPUs.

Table 3- 2 Communication services of the CPUs

Communication service	Functionality	Time at which the S7 connection is established ...	via MPI	via DP	via PtP	via PN
PG communication	Commissioning, test, diagnostics	From the PG, starting when the service is being used	X	X	–	X
OP communication	Operator control and monitoring	From the OP at POWER ON	X	X	–	X
S7 basic communication	Data exchange	Programmed to take place via blocks (SFC parameters)	X	X	–	–
S7 communication	Data exchange in server and client mode: Configuration of connection required	Via active peer at POWER ON	Only as server	Only as server	–	X
Global data communication	Cyclic data exchange (e.g. bit memories)	Does not require an S7 connection	X	–	–	–
Routing of PG functions (only for CPUs with DP or PROFINET interface)	E.g. testing, diagnostics across network boundaries	From the PG, starting when the service is being used	X	X	–	X
Point-to-point connection	Data exchange via serial interface	Does not require an S7 connection	–	–	X	–
PROFIBUS DP	Data exchange between master and slave	Does not require an S7 connection	–	X	–	–
PROFINET CBA	Data exchange by means of component-based communication	Does not require an S7 connection	–	–	–	X
PROFINET IO	Data exchange between IO controllers and the IO devices	Does not require an S7 connection	–	–	–	X
Web server	Diagnostics	Does not require an S7 connection	–	–	–	X
SNMP (Simple Network Management Protocol)	Standard protocol for network diagnostics and parameterization	Does not require an S7 connection	–	–	–	X
Open communication by means of TCP/IP	Data exchange via Industrial Ethernet with TCP/IP protocol (by means of loadable FBs)	Does not require an S7 connection, is programmed to take place via loadable FBs	–	–	–	X
Open communication by means of ISO-on-TCP	Data exchange via Industrial Ethernet with ISO-on-TCP protocol (by means of loadable FBs)	Does not require an S7 connection, is programmed to take place via loadable FBs	–	–	–	X
Open communication by means of UDP	Data exchange via Industrial Ethernet with UDP protocol (by means of loadable FBs)	Does not require an S7 connection, is programmed to take place via loadable FBs	–	–	–	X

Communication service	Functionality	Time at which the S7 connection is established ...	via MPI	via DP	via PtP	via PN
Data record routing	for example, parameterization and diagnostics of field devices on the PROFIBUS DP by an engineering system operated on an MPI or PROFINET interface (e.g. PDM)	Takes place when the parameterization tool accesses the field device	X	X	–	X
Clock synchronization	Broadcast frames	Does not require an S7 connection	X	X	–	–
	NTP protocol	Does not require an S7 connection	–	–	–	X

See also

Distribution and availability of S7 connection resources (Page 87)

Connection resources for routing (Page 89)

3.2.2 PG communication

Properties

PG communication is used to exchange data between engineering stations (e.g. PG, PC) and SIMATIC modules with communications capability. This service is possible via MPI, PROFIBUS, and Industrial Ethernet subnets. Transition between subnets is also supported.

PG communication provides the functions needed to load programs and configuration data, run tests, and evaluate diagnostic information. These functions are integrated in the operating system of
SIMATIC S7 modules.

A CPU can maintain several simultaneous online connections to one or multiple PGs.

3.2.3 OP communication

Properties

Using OP communication, you can exchange data between operator stations (e.g. OP, TP, WinCC) and SIMATIC modules which have communication functionality. This service is possible via MPI, PROFIBUS, and Industrial Ethernet subnets.

OP communication provides functions you require for operator control and monitoring. These functions are integrated in the operating system of SIMATIC S7 modules. A CPU can maintain several simultaneous connections to one or several OPs.

OP communication can be accelerated enormously by activating "prioritized OCM communication" in the CPU's properties dialog. The CPU must support this function (consult the technical specifications of the relevant CPU).

Note

Effects of "prioritized OCM communication"

- Consistency with user program data will be lost. Consistency must be ensured by means of the user program (refer to the "Data consistency (Page 79)" chapter).
- The cycle time increases.

3.2.4 S7 basic communication

Properties

S7 basic communication is used to exchange data between S7 CPUs and the communication-capable SIMATIC modules within an S7 station (acknowledged data exchange). Data is exchanged via non-configured S7 connections. The service is available via the MPI subnet, or within the station to function modules (FM).

S7 basic communication provides the functions you require for data exchange. These functions are integrated into the CPU operating system. The user can utilize this service via the "System function" (SFC) user interface.

Reference

Additional information

- on SFCs can be found in the *instruction list.*
  A detailed description is available in the *STEP 7 Online Help* or *System and Standard Functions* Reference Manual
- on communication is found in the *Communication with SIMATIC* manual

3.2.5 S7 communication

Properties

A CPU can always operate in server or client mode in S7 communication: We distinguish between

- connections configured at one end (for PUT/GET only)
- connections configured at both ends (for USEND, URCV, BSEND, BRCV, PUT, GET)

However, the available functionality depends on the CPU. A CP is therefore required in certain situations.

Table 3- 3 Client and server in S7 communication using connections configured at one end/both ends

CPU	Use in server mode for connections configured at one end	Use in server mode for connections configured at both ends	Use as client
31xC ≥ V1.0.0	Generally possible on MPI/DP interface without programming of user interface	Only possible with CP and loadable FBs	Only possible with CP and loadable FBs
31x ≥ V2.0.0	Generally possible on MPI/DP interface without programming of user interface	Only possible with CP and loadable FBs	Only possible with CP and loadable FBs
31x ≥ V2.2.0	Generally possible on MPI/DP/PN interface without programming of user interface	• Possible on PROFINET interface with loadable FBs or • with CP and loadable FBs	• Possible on PROFINET interface with loadable FBs or • with CP and loadable FBs

The user interface is implemented using standard function blocks (FBs) from the standard library of STEP 7, under communication blocks.

Reference

For additional information on communication, refer to the *Communication with SIMATIC* manual.

3.2.6 Global data communication (MPI only)

Properties

Global data communication is used for cyclic exchange of global data via MPI subnets (for example, I, Q, M) between SIMATIC S7 CPUs (data exchange without acknowledgement). One CPU sends the data to all CPUs simultaneously in the MPI subnet. This function is integrated in the CPU operating system.

Reduction ratio

The reduction ratio specifies the cyclic intervals for GD communication. You can set the reduction ratio when you configure global data communication in STEP 7. For example, if you set a reduction ratio of 7, global data is transferred only with every 7th cycle. This reduces the CPU load.

Send and receive conditions

Conditions which should be satisfied for communication via GD circles:

- Mandatory for the sender of a GD package:
  Reduction ratio $_{Transmitter}$ x Cycle time$_{Transmitter}$ $\geq$ 60 ms
- Mandatory for the receiver of a GD package:
  Reduction ratio $_{Receiver}$ x Cycle time $_{Receiver}$
  < Reduction ratio$_{Transmitter}$ x Cycle time$_{Transmitter}$

A GD package may be lost if you do not adhere to these conditions. The reasons being:

- The performance capability of the "smallest" CPU in the GD circle
- Global data is transmitted and received asynchronously by the transmitting and receiving stations

If in STEP 7 you set "Transmit after each CPU cycle" and the CPU has a short CPU cycle time (< 60 ms), the operating system might overwrite a GD package of the CPU before it is transmitted. The loss of global data is indicated in the status box of a GD circle if you set this function in STEP 7.

GD resources of the CPUs

Table 3- 4 GD resources of the CPUs

Parameters	All CPUs of the S7-300 product family
Number of GD circles per CPU	Max. 8
GD packages transmitted per GD circle	Max. 1
GD packages transmitted for all GD circles	Max. 8
GD packages received per GD circle	Max. 1
GD packages received for all GD circles	Max. 8
Data length per GD package	Max. 22 bytes
Consistency	Max. 22 bytes
Min. reduction ratio (default)	1 (8)

3.2.7 Routing

Properties

STEP 7 V5.1 + SP4 or higher allows you to access your S7 stations in all subnets with your PG/PC, for example, to

- download user programs
- download a hardware configuration
- perform test and diagnostic functions

Note

If the CPU is used as an intelligent DP slave, the routing function is only available when the DP interface is set active. In STEP 7, activate the Test, Commission Routing checkbox in the properties dialog of the DP interface. For detailed information, refer to the *Programming with STEP 7 manual*, or directly to the *STEP 7 Online Help.*

Routing gateways: MPI - DP

Gateways between subnets are located in the SIMATIC station that is equipped with interfaces to the respective subnets. The figure below shows CPU 1 (DP master) acting as gateway between subnet 1 and 2.

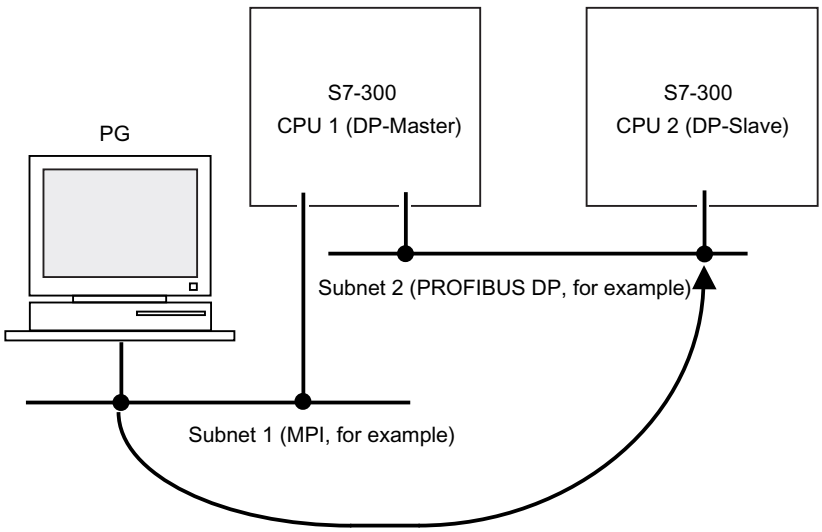

The figure below shows the MPI access to PROFINET via PROFIBUS. CPU 1 (e.g. 315-2 DP) is the gateway between subnet 1 and 2;
CPU 2 is the gateway between subnet 2 and 3.

Routing gateways: MPI - DP - PROFINET

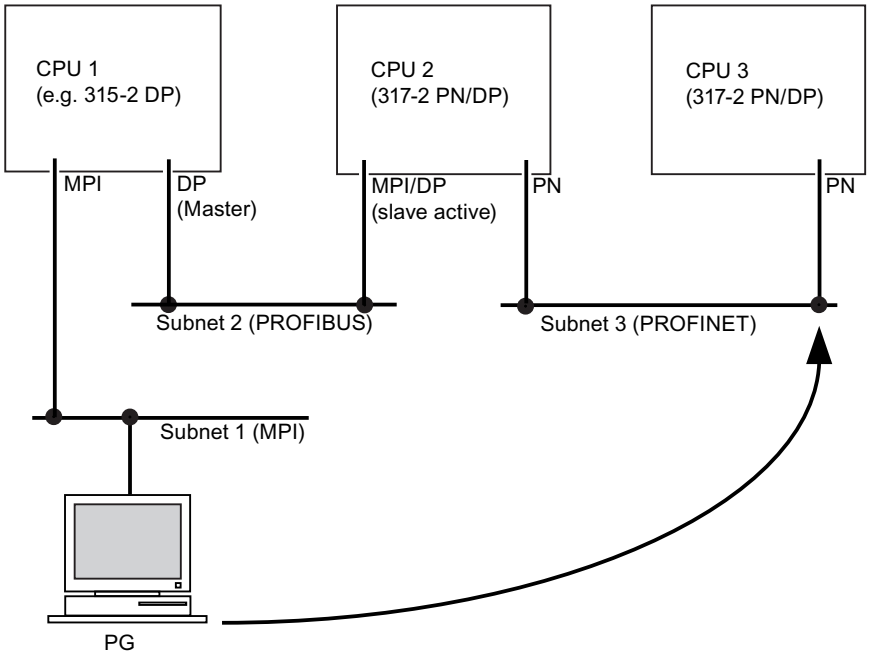

Number of connections for routing

The CPUs with DP interface provide a different number of connections for the routing function:

Table 3- 5 Number of routing connections for DP CPUs

CPU	As of firmware version	Number of connections for routing
31xC, CPU 31x	2.0	Max. 4
317-2 DP	3.3	Interface X1 configured as: • MPI: Max. 10 • DP master: Max. 24 • DP slave (active): Max. 14
		Interface X2 configured as: • DP master: Max. 24 • DP slave (active): Max. 14
31x-2 PN/DP	2.2	Interface X1 configured as: • MPI: Max. 10 • DP master: Max. 24 • DP slave (active): Max. 14
		Interface X2 configured as: • PROFINET: Max. 24

CPU	As of firmware version	Number of connections for routing
314C-2 PN/DP	3.3	Interface X1 configured as: • MPI: Max. 10 • DP master: Max. 24 • DP slave (active): Max. 14
		Interface X2 configured as: • PROFINET: Max. 24
319-3 PN/DP	2.4	Interface X1 configured as: • MPI: Max. 10 • DP master: Max. 24 • DP slave (active): Max. 14
		Interface X2 configured as: • DP master: Max. 24 • DP slave (active): Max. 14
		Interface X3 configured as: • PROFINET: Max. 48

Requirements

- The station modules are "capable of routing" (CPUs or CPs)
- The network configuration does not exceed project limits
- The modules have loaded the configuration data containing the latest "knowledge" of the entire network configuration of the project.

  Reason: All modules participating in the gateway must receive the routing information defining the paths to other subnets
- In your network configuration, the PG/PC you want to use to establish a connection via a gateway must be assigned to the network it is physically connected to
- The CPU must set to master mode
- Or if the CPU is configured as slave, the Test, Commissioning, Routing functionality must be enabled for DP slave by activating the checkbox in STEP 7 in the DP interface properties dialog box

Routing: Example of a TeleService application

The figure below shows the example of an application for remote maintenance of an S7 station using a PG. The connection to other subnets is here established via modem connection.

The lower section of the figure shows how easily this can be configured in STEP 7.

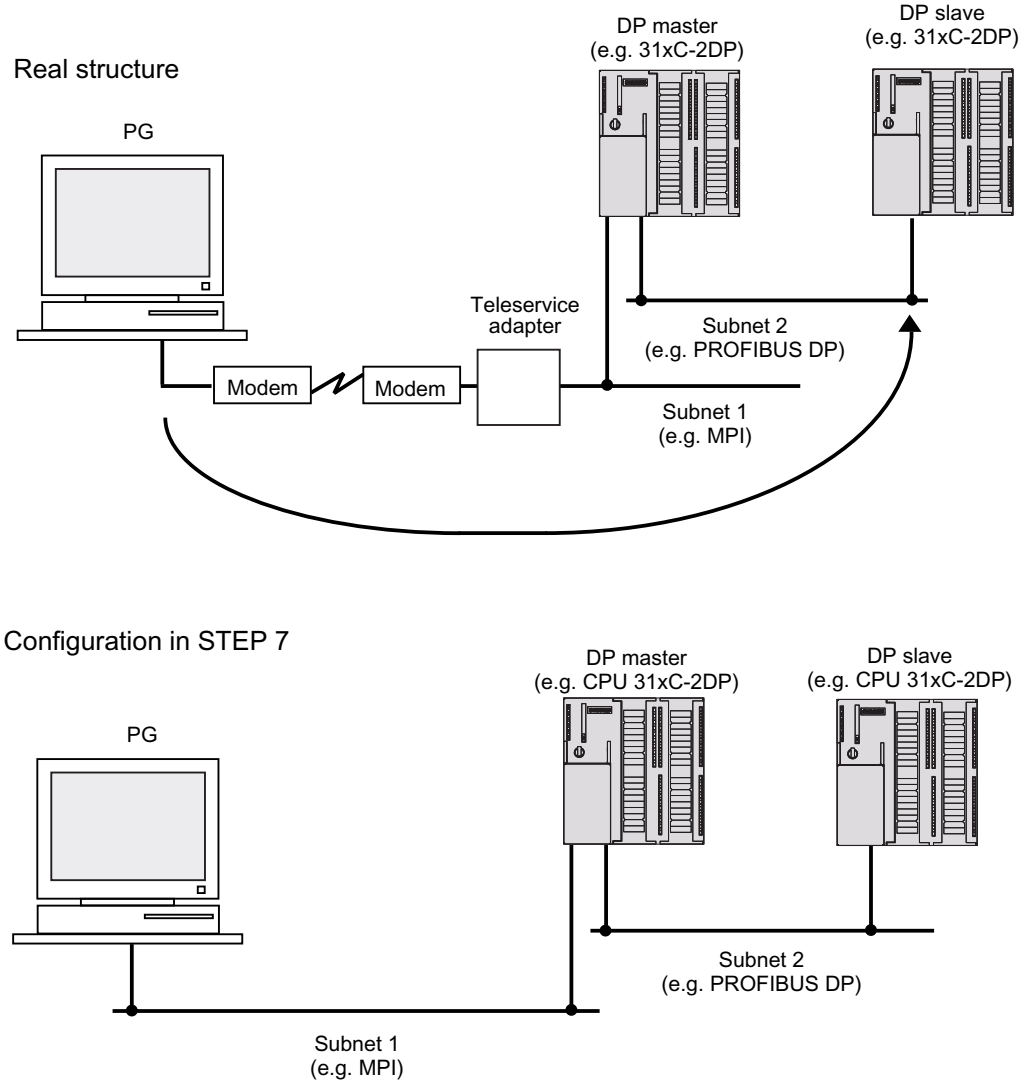

Reference

Additional information

- on configuring in STEP 7 can be found in the *Configuring Hardware and Connections in STEP 7* manual
- on communication is found in the *Communication with SIMATIC* manual
- on the TeleService adapter can be found on the Internet (http://support.automation.siemens.com/WW/view/en/20983182).
- on SFCs can be found in the *instruction list*.
  For a detailed description, refer to the *STEP 7 Online Help* or *System and Standard Functions* Reference Manual

3.2.8 Data record routing

Availability

The following CPUs support data record routing:

CPU	As of version
CPU 313C-2 DP	V3.3
CPU 314C-2 DP	V3.3
CPU 314C-2 PN/DP	V3.3
CPU 315-2 DP	V3.0
CPU 315-2 PN/DP	V3.1
CPU 317-2 DP	V3.3
CPU 317-2 PN/DP	V3.1
CPU 319-3 PN/DP	V2.7

Routing and data record routing

Routing is the transfer of data beyond network boundaries. You can send information from a transmitter to a receiver across several networks.

Data record routing is an extension of "normal routing" and is used, for example, by SIMATIC PDM if the programming device is not connected directly to the PROFIBUS DP subnet to which the target device is connected, but, for example, to the PROFINET interface of the CPU. The data sent by means of data record routing include the parameter assignments for the participating field devices (slaves) and device-specific information (e.g. setpoint values, limit values). The structure of the target address for data record routing depends on the data contents, i.e. the slave to which the data is sent.

With the programming device, data record routing can also be used to read a parameter set already existing on the field device, edit it and return it to the field device if the programming device is assigned to a different subnet than that of the target slave.

The field devices themselves do not have to support data record routing, since they do not forward the information received.

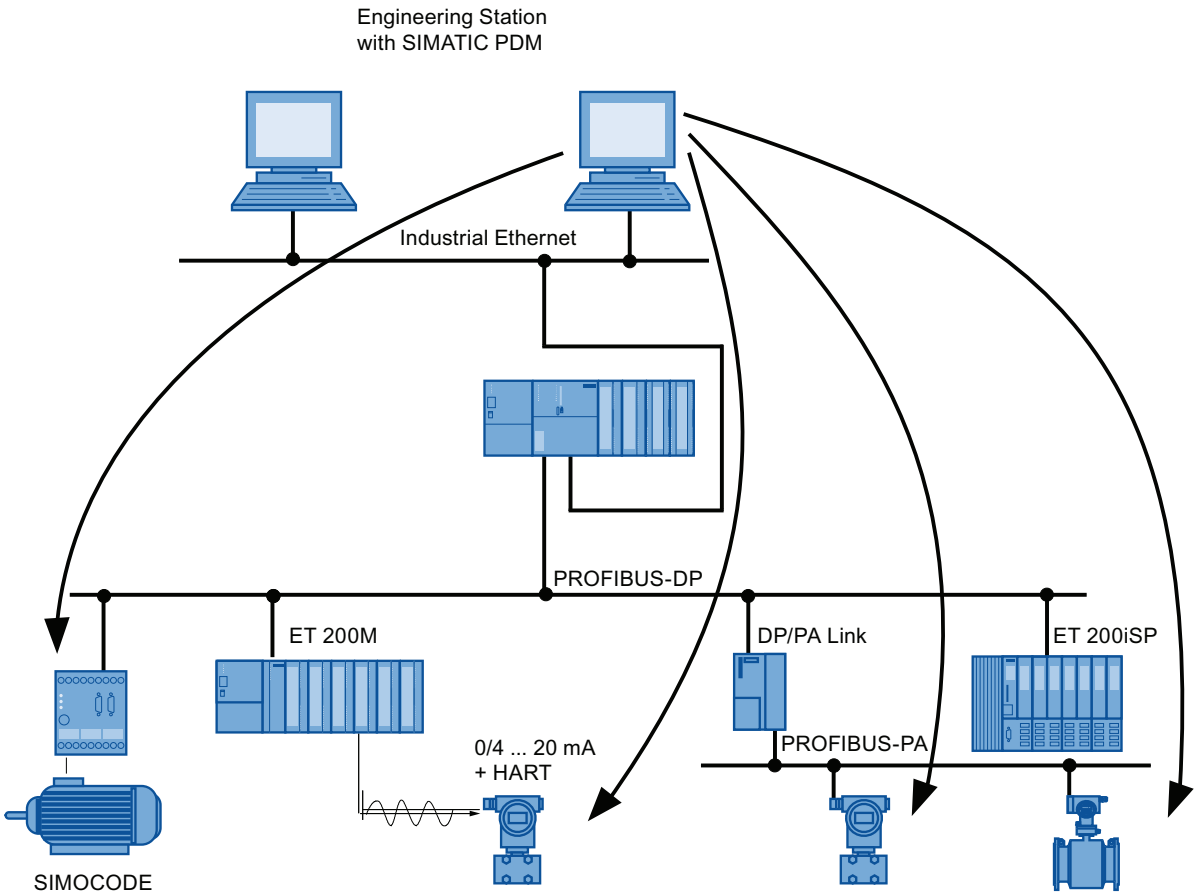

Figure 3-1 Data record routing

See also

You can find additional information on *SIMATIC PDM* in *The Process Device Manager* manual.

3.2.9 Clock synchronization

Introduction

The CPU interfaces support clock synchronization. The CPU can be programmed for operation as time master (with default synchronization intervals) or as time slave.

Default: No clock synchronization

Setting the synchronization mode

In HW Config, in the properties dialog, set the synchronization mode as follows:

- Within the AS (on the central I/O bus): Tab → Diagnostics / Clock (also for MPI on CPUs without DP interface)
- For the MPI/DP or DP interface: Tab → Clock
- For the PROFINET interface: Tab → Clock synchronization

Interfaces

Clock synchronization is supported at the following interfaces:

- MPI interface

  You can configure the CPU as time master or time slave.
- DP interface

  You can configure the CPU as time master or time slave.
- PROFINET interface

  Clock synchronization by means of NTP method and client CPU.
- On the automation system in the central rack

  You can configure the CPU as time master or time slave.

Note

The CPU cannot be time slave on more than one of these interfaces.

CPU as time slave

As a time slave, the CPU receives synchronization frames from exactly one time master and accepts this time as its own internal time of the CPU.

CPU as time master

As time master, the CPU broadcasts clock synchronization frames at programmed synchronization intervals to synchronize other stations on the connected subnet.

Requirement: The CPU clock is no longer in default state. The clock must have been set at least once.

Clock synchronization as **time master** starts:

- As soon as you initialize the time by means of SFC 0 "SET_CLK", or programming device function.
- Using another time master, if the CPU is also programmed via MPI/DP or PROFINET interface for operation as time slave.

Note

The real-time clock of the CPU is not set:

- in factory state
- after reset to factory settings by means of the mode selector switch
- after firmware updates

Example 1

A CPU already set up as time slave on the DP interface must be set up as time master at the MPI interface and/or on the automation system.

Clock synchronization via PROFINET

The CPU can be operated on the PROFINET interface as time-of-day client based on the NTP (Network Time Protocol) procedure.

Default: No clock synchronization based on NTP.

Activate the "Clock synchronization based on NTP" option to synchronize the CPU's clock via PROFINET. This option is available in the "Clock synchronization" properties of the PROFINET interface. You also need to enter the IP addresses of the NTP server and a synchronization interval.

Information on suitable NTP servers and on NTP is available, for example, under the entry ID: 17990844.

Note

The PROFINET interface cannot be operated as time-of-day server, that is, the CPU cannot synchronize any other clocks on PROFINET.

Example 2

A CPU already synchronized over NTP with a time master by means of clock synchronization via PROFINET interface (corresponds to time slave functionality) must be operated as time master at the DP interface and/or MPI interface, or on the automation system.

3.2.10 Point-to-point connection

Properties

A point-to-point connection permits you to exchange data via a serial interface. A point-to-point connection can be used to interconnect programmable controllers, computers or communication-capable third-party systems. Adaptation to the procedure of the communication peer is also possible.

Reference

Additional information

- on SFCs can be found in the *instruction list*.
  A detailed description is available in the *STEP 7 Online Help* and in the *Technological Functions* manual
- on communication is found in the *Communication with SIMATIC* manual

3.2.11 Data consistency

Properties

A data area is consistent if it can be read from or written to the operating system as one block. Data exchanged collectively between the stations should belong together and originate from a single processing cycle, that is, be consistent. If the user program contains a programmed communication function, for example, access to shared data with XSEND/ X-RCV, access to that data area can be coordinated by means of the "BUSY" parameter itself.

With PUT/GET functions

For S7 communication functions such as PUT/GET or write/read via OP communication, which do not require a block in the user program of the CPU (in server mode), the extent of the data consistency must be considered already during programming. The PUT/GET functions of S7 communication or reading/writing of variables via OP communication are executed at the CPU's cycle control point. To ensure a defined hardware interrupt response time, the communication variables are copied in blocks of up to 240 bytes consistently to/from the copied user memory in the cycle control point of the operating system. Data consistency is not ensured for larger data areas.

Operations with PUT/GET functions and "prioritized OCM communication"

The data consistency specified will be lost if you configure operations with "prioritized OCM communication" (refer to the "OP communication" (Page 68) chapter). Consequently, data consistency must be ensured by means of the user program.

Consistency is retained for:

- byte, word, Dword access such as L MDx
- SFC 14 "DPRD_DAT"
- SFC 15 "DPWR_DAT"
- SFC 81 "UBLKMOV" (for copying up to 512 bytes of data)

You should also be aware of the fact that, if "prioritized OCM communication" is configured, communication variables in blocks of max. 240 bytes are not copied consistently to/from work memory at the cycle control point. Instead, this data is copied during user program runtime.

Note

Where defined data consistency is required, the length of communication variables in the user program of the CPUs cannot exceed 240 bytes.

3.3 SNMP communication service

Availability

The SNMP V1, MIB-II communication service is available for CPUs with integrated PROFINET interface firmware 2.2 or higher.

Properties

SNMP (Simple Network Management Protocol) is a standard protocol for TCP/IP networks.

Reference

For additonal information on the SNMP communication service and diagnostics with SNMP, refer to the *PROFINET system description* and to the *Operating Instructions S7-300 CPU 31xC and CPU 31x, Installation*.

3.4 Open communication via Industrial Ethernet

Requirements

- STEP 7 as of V5.4 + SP4

Functionality

The CPUs with integrated PROFINET interface as of firmware V2.3.0 or V2.4.0 support the functionality of open communication via Industrial Ethernet (in short: *open IE communication*)

The following services are available for open IE communication:

- Connection-oriented protocols
  - TCP according to RFC 793, connection type B#16#01, firmware V2.3.0 and higher
  - TCP according to RFC 793, connection type B#16#11, firmware V2.4.0 and higher
  - ISO-on-TCP according to RFC 1006, firmware V2.4.0 and higher
- Connectionless protocols
  - UDP according to RFC 768, firmware V2.4.0 and higher

Properties of the communication protocols

The following protocol types exist in data communication:

- Connection-oriented protocols:

  Prior to data transmission, these protocols establish a (logical) connection to the communication peer and close it again, if necessary, after transmission is completed. Connection-oriented protocols are used when security is especially important in data transmission. Usually several logical connections can be established via a physical cable.

  The FBs for open communication via Industrial Ethernet support the following connection-oriented protocols:

  - TCP according to RFC 793 (connection types B#16#01 and B#16#11)
  - ISO-on-TCP according to RFC 1006 (connection type B#16#12)
- Connectionless protocols:

  These protocols operate without a connection. This means that no connections to a remote peer are established and terminated. Connectionless protocols transmit data to the remote peer without any acknowledgement; data transmission is, therefore, not secure.
  FBs for open communication via Industrial Ethernet support the following connectionless protocol:

  - UDP according to RFC 768 (connection type B#16#13)

How can you use open IE communication?

To allow data to be exchanged with other communication peers, STEP 7 provides the following FBs and UDTs under "Communication Blocks" in the "Standard Library":

- Connection-oriented protocols: TCP, ISO-on-TCP
  - FB 63 "TSEND" for sending data
  - FB 64 "TRCV" for receiving data
  - FB 65 "TCON" for connecting
  - FB 66 "TDISCON" for disconnecting
  - UDT 65 "TCON_PAR" with the data structure for parameterizing the connection
- Connectionless protocol: UDP
  - FB 67 "TUSEND" for sending data
  - FB 68 "TURCV" for receiving data
  - FB 65 "TCON" for establishing the local communication access point
  - FB 66 "TDISCON" for resolving the local communication access point
  - UDT 65 "TCON_PAR" with the data structure for parameterizing the local communication access point
  - UDT 66 "TCON_ADR" with the data structure of the addressing parameters of the remote peer

Data blocks for parameterization

- Data blocks for parameterization of the TCP and ISO-on-TCP connections

  To configure the connections with TCP and ISO-on-TCP, you need to create a DB that contains the data structure from UDT 65 "TCON_PAR". This data structure contains all parameters you need to establish the connection. You need such a data structure for each connection, and you can also organize it in a global data storage area.

  The CONNECT parameter of the FB 65 "TCON" contains a reference to the address of the corresponding connection description (e.g. P#DB100.DBX0.0 Byte 64).

- Data blocks for the parameterization of the local communication access point with UDP

  To assign parameters for the local communication access point, create a DB containing the data structure from the UDT 65 "TCON_PAR". This data structure contains the required parameters you need to establish the connection between the user program and the communication layer of the operating system

  The CONNECT parameter of the FB 65 "TCON" contains a reference to the address of the corresponding connection description (e.g. P#DB100.DBX0.0 Byte 64).

Note

Setting up the connection description (UDT 65)

The communication interface has to be entered in the "local_device_id" parameter in UDT65 "TCON_PAR" (e.g. B#16#03: communication via the integrated IE interface of CPU 319-3 PN/DP).

Establishing a connection for communication

- Use with TCP and ISO-on-TCP

  Both communication peers call FB 65 "TCON" to establish the connection. In the parameterization you define which communication peer is the activate and which one is the passive communication end point. To determine the number of possible connections, refer to your CPU's technical specifications.

  The CPU automatically monitors and maintains the active connection.

  If the connection is interrupted, for example due to an open circuit or by the remote communication peer, the active peer tries to reestablish the connection. You do not have to call FB 65 "TCON" again.

  An active connection is terminated by calling the FB 66 "TDISCON" or when the CPU is in STOP mode. To reestablish the connection you have to call FB 65 "TCON" again.

- Use with UDP

  Both communication peers call FB 65 "TCON" to set up their local communication access point. This establishes a connection between the user program and operating system's communication layer. No connection is established to the remote peer.

  The local access point is used to send and receive UDP telegrams.

Disconnecting

- Use with TCP and ISO-on-TCP

  FB 66 "TDISCON" disconnects a connection between CPU and communication peer.

- Use with UDP

  FB 66 "TDISCON" disconnects the local communication access point, i.e. the connection between user program and communication layer of the operating system is interrupted.

Options for terminating the connection

The following events are available for causing interruptions of communication:

- You program the discontinuation of the connection with the FB 66 "TDISCON".
- The CPU goes from RUN to STOP.
- At Power Off/Power On

Communication diagnostics

In STEP 7 V5.4 SP5 and higher, you can select "Module state → Communication → Open communication over Industrial Ethernet" to read additional information about the configured connections.

Reference

For detailed information on the blocks described above, refer to the *STEP 7 Online Help*.

3.5 S7 connections

3.5.1 S7 connection as communication path

An S7 connection is established when S7 modules communicate with one another. This S7 connection is the communication path.

Note

S7 connections are not required for global data communication, point-to-point connection, communication by way of PROFIBUS DP, PROFINET CBA, PROFINET IO, TCP/IP, ISO on TCP, UDP, SNMP and web server.

Every connection requires S7 connection resources on the CPU for the entire duration of this connection.

Each S7-CPU provides a specific number of S7 connection resources which are used by various communication services (PG/OP communication, S7 communication, or S7 basic communication).

Connection points

An S7 connection between communication-capable modules is established between connection points. The S7 connection always has two connection points: The active and the passive connection point:

- The active connection point is assigned to the module that establishes the S7 connection.
- The passive connection point is assigned to the module that accepts the S7 connection.

Any module that is capable of communication can thus act as an S7 connection point. At the connection point, the established connection always occupies one S7 connection on the relevant module.

Transition point

If you use the routing functionality, the S7 connection between two communication-capable modules is established across a number of subnets. These subnets are interconnected via a gateway. The module that implements this gateway is known as a router. The router is thus the point through which an S7 connection passes.

Any CPU with a DP or PN interface can be the router for an S7 connection. You can establish a specific number of routing connections. This does not limit the quantity framework of S7 connections.

See also

Connection resources for routing (Page 89)

3.5.2 Allocation of S7 connections

There are several ways to allocate S7 connections on a communication-capable module:

- Reservation during configuration
- Allocating connections by means of programming
- Allocating connections during commissioning, testing and diagnostics
- Allocating connections for OCM services

Reservation during configuration

One connection resource each is automatically reserved on the CPU for PG and OP communication. Whenever you need more connection resources (for example, when connecting several OPs), configure this increase in the CPU properties dialog box in STEP 7.

Connections must also be configured (using NetPro) for the use of S7 communication. For this purpose, connection resources which are not allocated to PG/OP or other connections have to be available. The required S7 connections are then permanently allocated for S7 communication when the configuration is downloaded to the CPU.

Allocating connections by means of programming

In S7 basic communication and in open Industrial Ethernet communication with TCP/IP, the user program establishes the connection. The CPU's operating system initiates the connection. S7 basic communication uses the corresponding S7 connections. The open IE communication does not use any S7 connections. However, a maximum number of connections also applies for this type of communication:

- 8 connections with the CPU 314C-2 PN/DP
- 8 connections for CPUs 315-2 PN/DP
- 16 connections for CPUs 317-2 PN/DP
- 32 connections with the CPU 319-3 PN/DP

Allocating connections for commissioning, testing and diagnostics

An online function on the engineering station (PG/PC with STEP 7) allocates S7 connections for PG communication:

- If an S7 connection resource was reserved for PG communication in your CPU hardware configuration, it is assigned to the engineering station, i.e. it only needs to be allocated.
- If all reserved S7 connections for PG communication are allocated, the operating system automatically assigns a free S7 connection resource which has not yet been reserved. If no more connections are available, the engineering station cannot go online to communicate with the CPU.

Allocating connections for OCM services

An online function on the OCM station (OP/TP/... with *WinCC*) is used for allocating S7 connections for the OP communication:

- If an S7 connection resource was reserved for OP communication in your CPU hardware configuration, it is assigned to the OCM station, i.e. it only needs to be allocated.
- If all reserved S7 connection resources for OP communication are allocated, the operating system automatically assigns a free S7 connection resource which has not yet been reserved. If no more connection resources are available, the OCM station cannot go online to communicate with the CPU.

Time sequence for allocation of S7 connections

When you configure your project in STEP 7, parameterization blocks are generated which are read during startup of the modules. Thus the module's operating system reserves or allocates the relevant S7 connections. This means, for instance, that OPs cannot access a reserved S7 connection for PG communication. The CPU's S7 connections which were not reserved can be used as required. These S7 connections are allocated in the order they are requested.

Example

If there is only one free S7 connection left on the CPU, you can connect a PG to the bus. The PG can then communicate with the CPU. The S7 connection is only used, however, when the PG is communicating with the CPU. If you connect an OP to the bus while the PG is not communicating, the OP can establish a connection to the CPU. Since an OP maintains its communication link at all times, in contrast to the PG, you cannot subsequently establish another connection via the PG.

3.5.3 Distribution and availability of S7 connection resources

Distribution of connection resources

Table 3- 6 Distribution of connections

Communication service	Distribution
PG communication OP communication S7 basic communication	In order to avoid allocation of connection resources being dependent only on the chronological sequence in which various communication services log in, connection resources can be reserved for these services. For PG and OP communication respectively, at least one connection resource is reserved by default. In the table below, and in the technical specifications of the CPUs, you can find the configurable S7 connections and the default settings for each CPU. You "redistribute“ connection resources by setting the relevant CPU parameters in STEP 7.
S7 communication Other connections (e.g. via CP 343-1 with data lengths of > 240 bytes)	Available connection resources which are not specially reserved for a service (PG/OP communication, S7 basic communication) are allocated for this.
Routing of PG functions (only for CPUs with DP/PN interface)	The CPUs provide a certain number of connections for routing. These connections are available in addition to the connection resources. The subsection below shows the number of connection resources.
Global data communication Point-to-point connection PROFIBUS DP PROFINET CBA PROFINET IO Web server	These communication services require no S7 connection resources.
Open communication by means of TCP/IP	This communication service requires no S7 connection resources.
Open communication by means of ISO-on-TCP	A CPU-specific number of internal resources is available for TCP/IP, ISO on TCP and UDP communication, or for local access points (UDP), independent of the S7-Connections (refer to Technical specifications of CPU 31x (Page 301) chapter and Technical Specifications of CPU 31x (Page 213) chapter).
Open communication by means of UDP	
SNMP	This communication service requires no S7 connection resources.

Availability of connection resources

Table 3- 7 Availability of connection resources

CPU	Total number of connection resources	Reserved for			Free S7 connections
		PG communication	OP communication	S7 basic communication	
312 312C	6	1 to 5, default 1	1 to 5, default 1	0 to 2, default 0	All non-reserved S7 connections are displayed as free connections.
313C 313C-2 PtP 313C-2 DP	8	1 to 7, default 1	1 to 7, default 1	0 to 4, default 0	
314 314C-2 PtP 314C-2 DP 314C-2 PN/DP	12	1 to 11, default 1	1 to 11, default 1	0 to 8, default 0	
315-2 DP 315-2 PN/DP	16	1 to 15, default 1	1 to 15, default 1	0 to 12, default 0	
317-2 DP 317-2 PN/DP	32	1 to 31, default 1	1 to 31, default 1	0 to 30, default 0	
319-3 PN/DP	32	1 to 31, default 1	1 to 31, default 1	0 to 30, default 0	

Note

When using a CPU 314C-2 PN/DP, you can configure up to 10 connection resources for S7 communication in NetPro: When using the CPU 315-2 PN/DP, you can configure up to 14 connection resources for S7 communication in NetPro:
These connections are then no longer available as free connections.

For CPU 317-2 PN/DP and CPU 319-3 PN/DP, you can configure up to 16 connection resources for S7 communication in NetPro.

3.5.4 Connection resources for routing

Number of connection resources for routing

CPUs with DP interface provide a different number of connection resources for the routing function:

Table 3- 8 Number of connection resources for routing (for DP/PN CPUs)

CPU	As of firmware version	Number of connections for routing
31xC, CPU 31x	2.0	Max. 4
317-2 DP	3.3	Interface X1 configured as: • MPI: Max. 10 • DP master: Max. 24 • DP slave (active): Max. 14
		Interface X2 configured as: • DP master: Max. 24 • DP slave (active): Max. 14
31x-2 PN/DP	2.2	Interface X1 configured as: • MPI: Max. 10 • DP master: Max. 24 • DP slave (active): Max. 14
		Interface X2 configured as: • PROFINET: Max. 24
314C-2 PN/DP	3.3	Interface X1 configured as: • MPI: Max. 10 • DP master: Max. 24 • DP slave (active): Max. 14
		Interface X2 configured as: • PROFINET: Max. 24
319-3 PN/DP	2.4	Interface X1 configured as: • MPI: Max. 10 • DP master: Max. 24 • DP slave (active): Max. 14
		Interface X2 configured as: • DP master: Max. 24 • DP slave (active): Max. 14
		Interface X3 configured as: • PROFINET: Max. 48

Example of a CPU 314C-2 DP

The CPU 314C-2 DP provides 12 connection resources (see Table 3-10):

- Reserve 2 connection resources for PG communication
- Reserve 3 connection resources for OP communication
- Reserve 1 connection resource for S7 basic communication

This leaves 6 connection resources available for other communication services, e.g. S7 communication, OP communication, etc.

In addition, 4 routing connections via the CPU are possible.

Example for a CPU 317-2 PN/DP / CPU 319-3 PN/DP

The CPU 317-2 PN/DP and CPU 319-3 PN/DP provide you with 32 connection resources (refer to Table 3-10):

- Reserve 4 connection resources for PG communication
- Reserve 6 connection resources for OP communication
- Reserve 2 connection resources for S7 basic communication
- In NetPro you configure 8 S7 connection resources for S7 communication via the integrated PROFINET interface

This leaves 12 S7 connections available for arbitrary communication services such as S7 communication, OP communication, etc.

However, only a maximum of 16 connection resources for S7 communication at the integrated PN interface can be configured in NetPro.

In addition, there are another 24 routing connections available for the CPU 317-2 PN/DP, and another 48 routing connections for the CPU 319-3 PN/DP, which do not affect the above described S7 connection resources.

However, take the interface-specific maximum numbers into account (refer to Table 3-11).

3.6 DPV1

New automation and process engineering tasks require the range of functions performed by the existing DP protocol to be extended. In addition to cyclical communication functions, acyclical access to non-S7 field devices is another important requirement of our customers and was implemented in the standard EN 50170. In the past, acyclical access was only possible to S7 slaves. The distributed I/O standard EN 50170 has been further developed. All changes concerning new DPV1 functions are included in IEC 61158/EN 50170, volume 2, PROFIBUS.

Definition DPV1

The term DPV1 is defined as a functional extension of the acyclical services (to include new interrupts, for example) provided by the DP protocol.

Availability

All CPUs with DP interface(s) and serving as DP masters feature the enhanced DPV1 functionality.

Note

If you want to use the CPU as an intelligent DP slave, it does not have DPV1 functionality.

Requirement for using the DPV1 functionality with DP slaves

For DPV1 slaves from other vendors, you will need a GSD file conforming to EN 50170, revision 3 or later.

Extended functions of DPV1

- Use of any DPV1 slaves from third-party manufacturers (in addition to the existing DPV0 and S7 slaves, of course).
- Selective handling of DPV1-specific interrupt events by new interrupt blocks.
- New standard-compliant SFBs for reading/writing data records (which, however, can also be used for centralized modules).
- User-friendly SFB for readout of diagnostics.

Interrupt blocks with DPV1 functionality

Table 3- 9 Interrupt blocks with DPV1 functionality

OB	Functionality
OB 40	Hardware interrupt
OB 55	Status interrupt
OB 56	Update interrupt
OB 57	Vendor-specific interrupt
OB 82	Diagnostic interrupt

Note

You can now also use the organization blocks OB40 and OB82 for DPV1 interrupts.

System blocks with DPV1 functionality

Table 3- 10 System function blocks with DPV1 functionality

SFB	Functionality
SFB 52	Read data record from DP slave/IO device or central module
SFB 53	Write data record to DP slave/IO device or central module
SFB 54	Read additional alarm information from a DP slave/IO device or a centralized module in the relevant OB
SFB 75	Send alarm to the DP master

Note

You can also use SFB 52 to SFB 54 for centralized I/O modules. SFB 52 to SFB 54 can also be used for PROFINET IO.

Reference

For additional information on the blocks above, refer to the Reference Manual *System Software for S7-300/400: System and Standard Software*, or directly to the *STEP 7Online Help*.

See also

PROFIBUS DP (Page 58)

3.7 Web server

Introduction

The web server allows you to monitor the CPU via the Internet or the intranet of your company. This permits evaluation and diagnostics over long distances.

Messages and status information are visualized on HTML pages.

Web browser

You need a web browser to access the HTML pages of the CPU.

The following web browsers are suitable for communication with the CPU:

- Internet Explorer (as of V6.0)
- Mozilla Firefox (as of V1.5)
- Opera (as of V9.0)
- Netscape Navigator (as of V8.1)

Reading information via the web server

The following table lists the information that you can read from the CPU and the CPU firmware version that supports this function:

	CPU 314, as of firmware…	CPU 315, as of firmware…	CPU 317, as of firmware…	CPU 319, as of firmware…
Start page with general CPU information	V3.3	V2.5	V2.5	V2.5
Identification information	V3.3	V2.5	V2.5	V2.5
Content of the diagnostic buffer	V3.3	V2.5	V2.5	V2.5
Module information	V3.3	V3.1	V3.1	V2.7
Messages (without acknowledgment option)	V3.3	V2.5	V2.5	V2.5
Information about communication	V3.3	V2.5	V2.5	V2.5
• Important interface parameters	V3.3	V2.5	V2.5	V2.5
• Port statistics	V3.3	V2.5	V2.5	V2.5
• Display of the communication connections for open communication (OUC)	V3.3	V3.2.1	V3.2.1	V3.2.1
• Display of the communication resources	V3.3	V3.2.1	V3.2.1	V3.2.1
Topology	V3.3	V3.1	V3.1	V2.7
• Display of the actual topology	V3.3	V3.1	V3.1	V2.8
• Display of the target topology specified in configuration data	V3.3	V3.2.1	V3.2.1	V3.2.1
Status of the variables	V3.3	V2.5	V2.5	V2.5
Variable tables	V3.3	V2.5	V2.5	V2.5
User pages (CPU31x PN/DP ≥ V3.2.1, and STEP 7 V5.5)	V3.3	V3.2.1	V3.2.1	V3.2.1

On the following pages you will find detailed information on the HTML pages and explanations.

Web access to the CPU via PG/PC

Proceed as follows to access the web server:

1. Connect the client (PG/PC) to the CPU via the PROFINET interface.
2. Open the web browser.

   Enter the IP address of the CPU in the "Address" field of the web browser in the format http://a.b.c.d or https://a.b.c.d (example: http://192.168.3.141).
   The CPU start page opens. From the start page you can navigate to further information.

Note

Up to 5 http-/https connections are supported.

Web access to the CPU via HMI devices and PDA

The web server also supports the Windows Terminal Service. In addition to PGs and PCs, this functionality also supports the integration of thin client solutions for mobile devices (e.g. PDA, MOBIC T8) and of rugged local stations (e.g. SIMATIC MP370 with ThinClient/MP option) under Windows CE.

Proceed as follows to access the web server:

1. Connect the client (HMI device, PDA) with the CPU via the PROFINET interface.
2. Open the web browser.

   Enter the IP address of the CPU in the "Address" field of the web browser in the format http://a.b.c.d/basic, or https://a.b.c.d/basic (example: http://192.168.3.141/basic).
   The CPU start page opens. From the start page you can navigate to further information.

HMI devices operating with the Windows CE operating system V 5.x or earlier process CPU information in a browser specially developed for Windows CE. The information appears in a simplified format in this browser. The following figures show the detailed format in each case.

Note

Using SIMATIC Micro Memory Card together with Web server

The configuration data for the Web server is stored on the SIMATIC Micro Memory Card. We therefore recommend that you use a SIMATIC Micro Memory Card with at least 512 KB.

You can also use the web server without SIMATIC Micro Memory Card. The CPU must have been assigned an IP address to permit operation.

- The content of the diagnostic buffer is displayed in hexadecimal code.
- Start page, identification and communication information, and variable status are displayed in plain text.
- Following displays remain empty:
  - Module information
  - Messages
  - Topology
  - Variable tables
  - User pages
- Automatic update of the pages is set by default until configured otherwise.

Security

The Web server provides the following security functions:

- Access via secure https transmission protocol
- User authorizations you can configure by means of user list

Safe-guard your CPUs that provide online access to the Web against intrusion by setting up a firewall.

3.7.1 Language settings

Introduction

The Web server provides messages and diagnostic information in the following languages:

- German (Germany)
- English (USA)
- French (France)
- Italian (Italy)
- Spanish (International Sort)
- Chinese (Simplified)
- Japanese

The two Asian languages can be combined as follows:

- Chinese with English
- Japanese with English

Requirements for the availability of the Asian languages

The following requirements have to be fulfilled for the Asian languages Chinese and Japanese:

- The corresponding language package is installed on the display device (e.g. PC).
- For CPU programming, STEP 7 for Asian languages (STEP 7, V5.5 or higher) is installed on the programming device.

Note

Asian languages are not supported for SIMATIC HMI devices with Windows CE operating system.

Requirements for multilingual output of text

The following two language settings must be made in STEP 7 to permit that the web server displays the different languages correctly:

- Set the regional language for the display devices in SIMATIC Manager
- Set the regional web language in the properties dialog of the CPU. For more information, refer to chapter: Settings in HW Config, "Web" tab (Page 97)

Set the regional language for the display devices in SIMATIC Manager

Select languages for display devices in SIMATIC Manager:
Options > Language for display devices

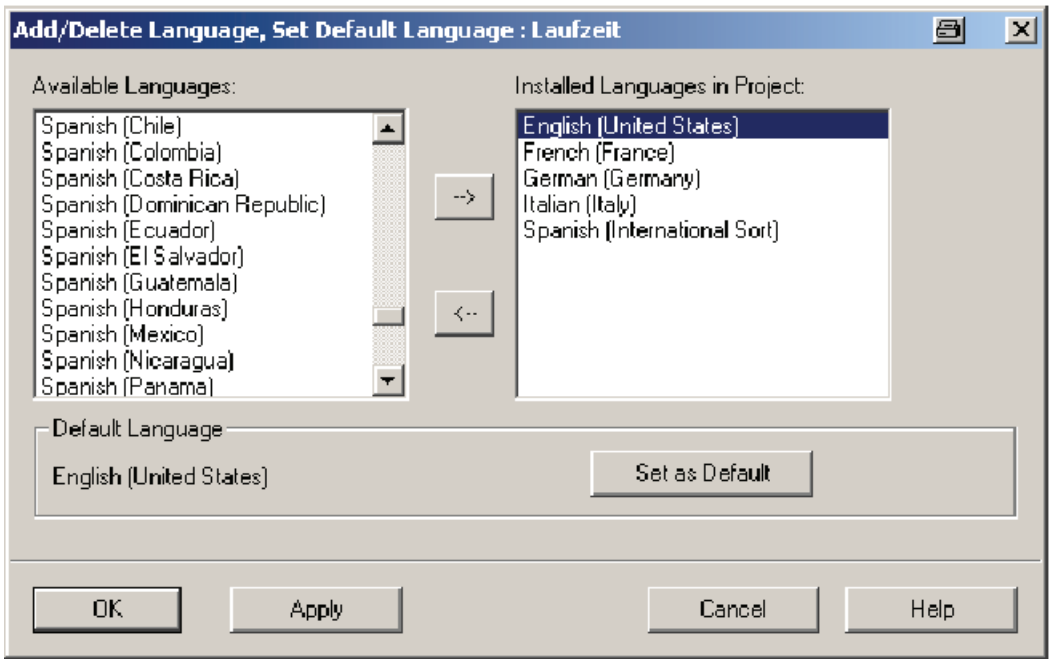

Figure 3-2 Example of the selection of a language for display devices

3.7.2 Settings in HW Config, "Web" tab

Requirements

You have opened the properties dialog of the CPU in HW Config.

Carry out the following settings in the "Web" tab to use the full functionality of the web server:

- Enable the web server
- Set the regional web language
- Adding entries to the user list
- HTTPS access activation
- Activating automatic updates
- Selecting the display classes of the messages

In order to enjoy the full functionality of the module information reports, message system, and topology of the project, you should also generate and load the "Report system errors" function.

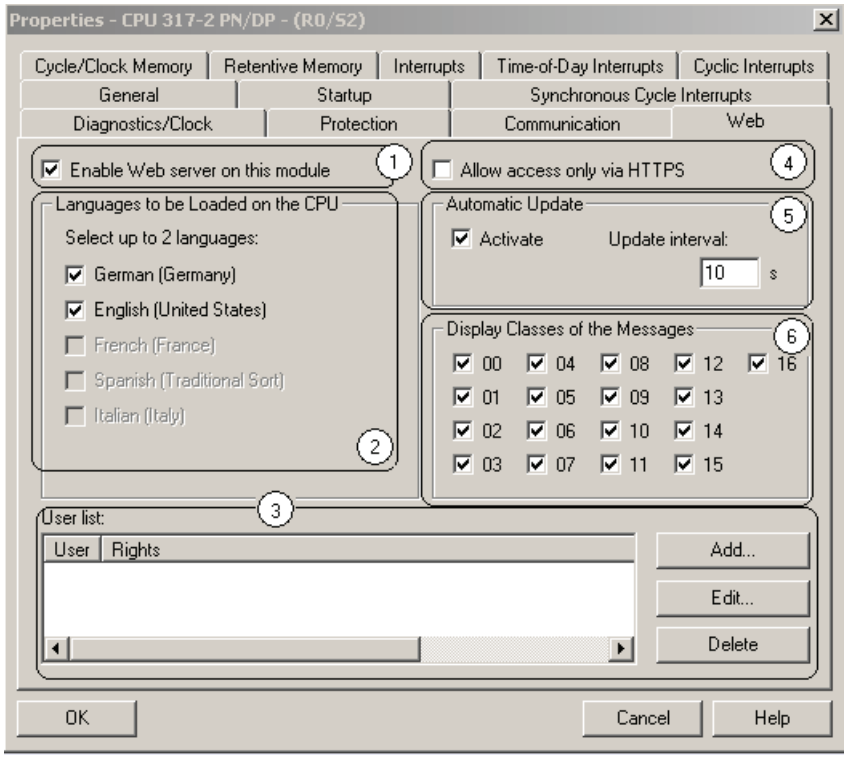

① Activating the web server

The web server is deactivated in the basic configuration in HW Config. You activate the web server in HW Config.

In the property view of the CPU:

- Activate the "Enable Web server on this module" checkbox

② Setting the regional web language

Select up to two web languages from the languages installed for the display devices.

In the property view of the CPU:

- Activate the "Enable Web server on this module" checkbox
- Select up to two web languages.

Note

The program displays messages and diagnostics information in hexadecimal code if you enable the web server without selecting a language.

③ User list

The user list provides the following options:

- Creating users
- Specifying execution rights
- Assigning passwords.

This assignment restricts user access exclusively to the options linked permanently to the execution rights.

- If no users were configured in HW Config, read-only access is granted to all Web pages.
- If users are configured, users who are not logged on can access the Intro and Start pages only.
- Configured users who are logged on are allowed to access the Web pages in accordance with their access rights.
- If you configured a specific user with "everybody" login, other users who are not logged on **do not have to enter a password** in order to access pages released for the "everybody" group.

  For example, if the user group "everybody" is granted access rights to "Read variables", the "Variable table" Web page is always displayed in the main menu bar without a password having been entered.

You can create a maximum of 20 users and "everybody" users.

④ Access via HTTPS only

https is used to encrypt communication between the browser and Web server.

For error-free https access to the CPU, the following conditions must be met:

- The current time is set on the CPU
- The IP address of the CPU is set (example: https://192.168.3.141)
- A valid certificate is installed

If no certificate is installed, a warning recommends not to use the page. To view this page, you must explicitly "Add an exception".

A valid certificate (Certification Authority) is available for download from the "Intro" Web page, "Download certificate". Instructions for installing the certificate are available in the help system of your Web browser.

An encrypted connection is identified by means of a lock icon in the status bar of the Web page.

⑤ Activating automatic updates

The following web pages can be updated automatically:

- Start page
- Diagnostic buffer
- Module information
- Messages
- Information about communication
- Topology
- Status of the variables
- Variable table

To enable automatic updates, proceed as follows:

- Set the "Activate" check box at "Automatic update" in the properties dialog ("Web" tab) of the CPU.
- Enter the update interval

Note

Update time

The update interval set in HW Config is the shortest update time. Larger data volumes or multiple http/https connections increase the update time.

⑥ Display classes of the messages

All display classes of the messages are activated in the basic configuration in HW Config. The messages for the selected display classes are displayed later on the "Messages" web page. Messages for display classes that are not selected are shown as hexadecimal code and not as plain text.

How to configure the message classes:

- For "Report system error" in HW Config under **Options > Report System Error**
- For block-specific messages in STEP 7

Information about configuring message texts and classes can be found in STEP 7.

Note

Reducing the memory requirements of the Web SDBs

You can reduce the memory requirements of the Web SDBs by selecting only those display classes of the messages that are to be filled in the Web SDB.

3.7.3 Updating and storing information

Update status of the screen content

Automatic updating is deactivated in the basic configuration in HW Config.
This means that the screen of the Web server outputs static information.

Refresh the Web pages manually using the <F5> function key, or the following icon:

Update status of printouts

Data output to the printer always indicates the latest CPU information. Therefore, it is possible that the printed information is more up to date than the contents on your screen.

To open a print preview of the Web page, click the following icon:

Filter settings have no effect on the printout, The printout of the "Messages" and "Module information" web pages always shows the complete content of the pages.

Disabling automatic updates for an individual web page

In order to temporarily disable automatic updates for a Web page, select the following icon:

Re-enable automatic updates again using the <F5> function key, or the following icon:

Saving messages and entries of the diagnostic buffer

You can save messages and diagnostics buffer entries to a csv file. Use the following icon to save the data:

A dialog opens in which you can specify the file name and target directory.

To prevent incorrect display of the data in Excel, do not open the csv file with double-click. Import the file in Excel by selecting the "Data" and "Import external data" menu commands.

3.7.4 Web pages

3.7.4.1 Start page with general CPU information

Connecting to the web server

To open a connection to the Web server, enter the IP address of the configured CPU in the address bar of the Web browser, e.g. http://192.168.1.158 , or https://192.168.1.158. The connection is set up and the "Intro" page opens.

In this section, we'll show you some examples of the layout of different Web pages and explain their functions.

Intro

The screenshot below shows the first page (Intro) called by the Web server.

Figure 3-3 Intro

Click the ENTER link to go to the web server pages.

Note

Skipping the Intro Web page

Select the "Skip Intro" check box in order to skip the Intro. As of now, the Web server will take you directly to its start page. To display the intro at the start of the web server again, click the "Intro" link on the start page.

Start page

Before the log in, the Start page offers information as shown in the figure below. The CPU image with LEDs returns the actual CPU status at the time of data request.

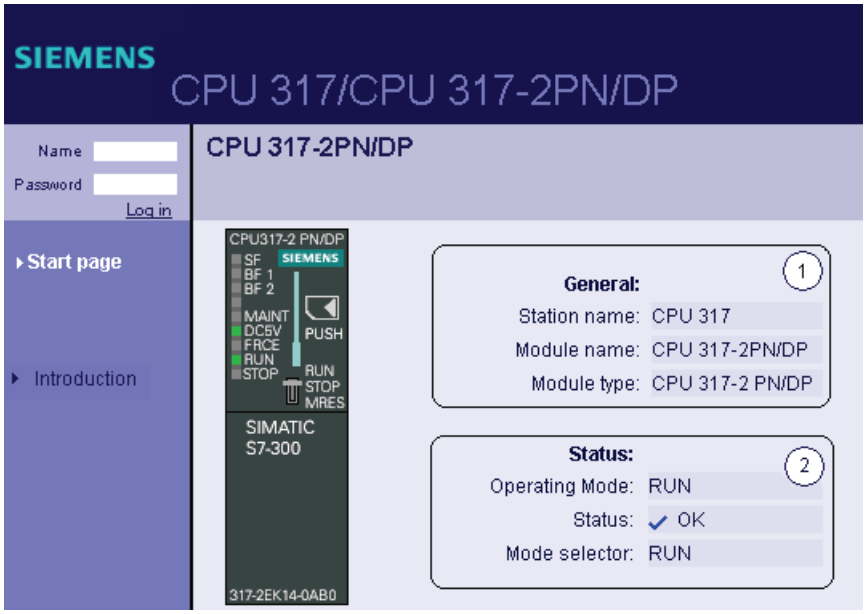

Figure 3-4 Start page before log in

Log in

You must be logged in in order to use the full functionality of the Web pages. Log in with a user name and password specified in the WEB configuration in HW Config. You now have corresponding authorizations to access the Web pages released for this user. (For more information, refer to chapter: Settings in HW Config, "Web" tab (Page 97)

① "General"

"General" contains information about the CPU with whose web server you are currently connected.

② "Status"

"Status" contains information about the CPU at the moment of the query.

Reference

Information on http/https connections, see chapter: Settings in HW Config, "Web" tab (Page 97)

3.7.4.2 Identification

Characteristics

The CPU parameters are available on the "Identification" Web page.

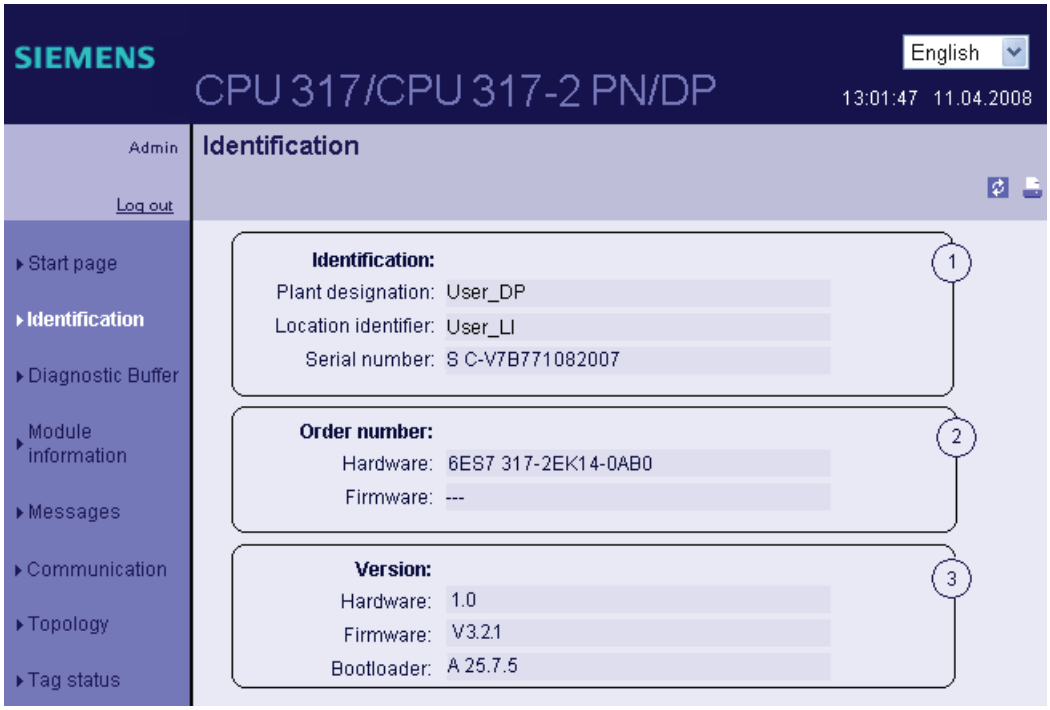

Figure 3-5 Identification

① "Identification"

The "Identification" info box contains the plant and location designation and the serial number. Plant and location designations can be configured in HW Config in the properties dialog box of the CPU, "General" tab.

② "Order number"

The "Order number" info box contains the order numbers for the hardware and firmware (if applicable).

③ "Version"

You can find the hardware, firmware and bootloader versions in the "Version" field.

3.7.4.3 Diagnostic buffer

Diagnostic buffer

The browser displays the content of the diagnostic buffer on the "Diagnostic buffer" web page.

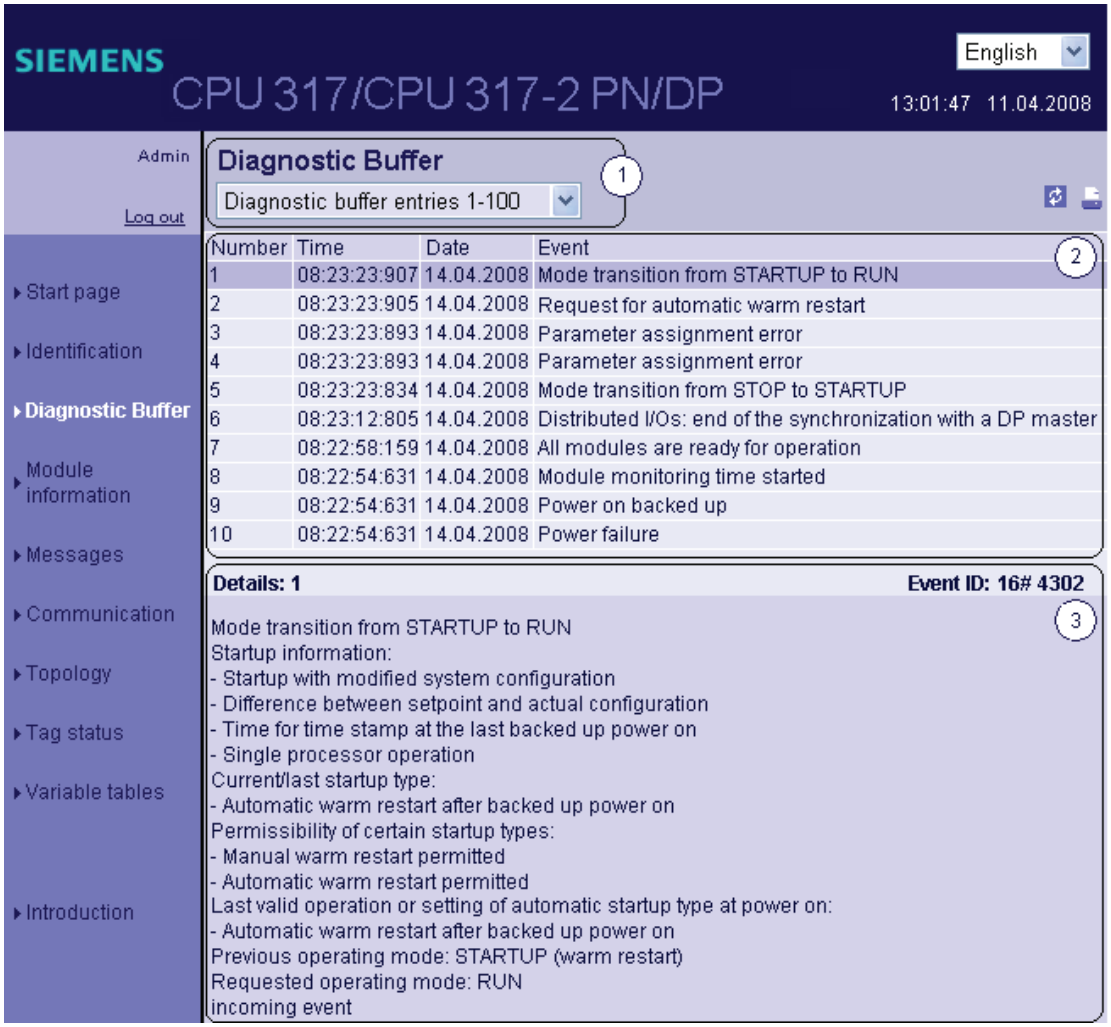

Figure 3-6 Diagnostic buffer

Requirements

The web server is activated, languages are set, and the project is compiled and downloaded in STEP 7.

① "Diagnostic buffer entries 1-100"

The diagnostic buffer can save up to 500 messages. Select an interval for the entries from the drop-down list box. Each interval comprises 100 entries.

In HW Config (CPU properties), you can set the parameters for PROFINET CPUs ≥ V2.8 to display from 10 to 499 diagnostic buffer entries in RUN. In RUN, 10 entries are set as default.

② "Event"

The "Event" info box contains the diagnostic interrupts with date and time.

③ "Details"

This field outputs detailed information about a selected event.

Select the corresponding event from the ② "Event" info field.

Configuration

Configuration procedure:

1. Open the "Object properties" dialog box from the context menu of the corresponding CPU.
2. Select the "Web" tab, and then activate the "Enable Web server on this module" checkbox.
3. Select up to two languages for displaying plain text messages.
4. Save and compile the project and download the configuration to the CPU.

Special features when changing languages

You can change the language, e.g. from German to English, in the upper right corner. If you select a language you have not configured, the program returns a hexadecimal code instead of plain text information.

3.7.4.4 Module information

Requirements

- You have carried out the following settings in HW Config:
  - Web server activated
  - Language settings carried out
  - "Report system error" generated and activated
- You have compiled the project using STEP 7 HW Config, loaded the SDB container and the user program (in particular the user program blocks generated by "Report system error")
- The CPU is in RUN mode

Note

"Report system error"

- **Duration of the display:** Depending on the plant extension level, the "Report system error" display requires some time to create the initial evaluation of the state of all the configured I/O modules and I/O systems. During this time there is no concrete display of the status on the "Module information" web page. A "?" is displayed in the "Status" column.
- **Dynamic response:** "Report system error" has to be called up cyclically at least every 100 ms.
  Calling up can take place in OB 1, or if the cycle time amounts to more than 100 ms, in the watchdog interrupt OB 3x (≤ 100 ms) and in the restart OB 100.
- **Diagnostics support:** In the "Report system error" dialog box, the "Diagnostic status DB" check box must be selected in the "Diagnostics support" tab and a DB number entered. This check box is normally selected as default with configured Web servers. During the migration of old project, it may however be necessary to select this check box.

Module information

The state of a station is indicated by means of symbols and comments on the "Module information" web page.

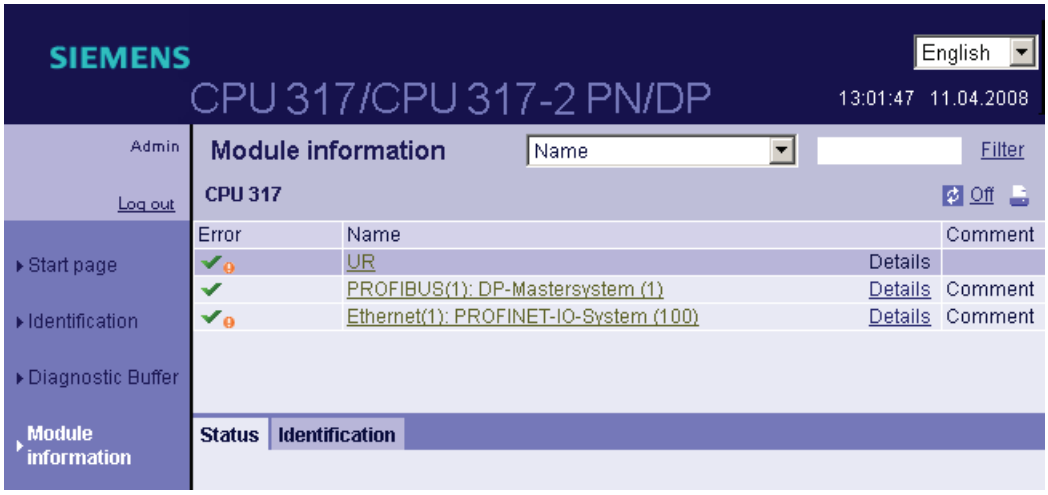

Figure 3-7 Module information - station

Meaning of the symbols in the "Symbol" column

Symbol	Color	Meaning
✔	green	Component is OK
✔	gray	Disabled PROFIBUS slaves or PROFINET devices Support conditions: • CPU31x PN/DP ≥ V3.2.1 and STEP 7 V5.5 + possible required HSP for the CPU • Enabling/disabling the PROFIBUS slaves and PROFINET IO devices using SFC12 mode 3/4 • In the "Report system errors" dialog, "Diagnostics support" tab, "Status enabled/disabled" area, the check mark must be set in the "Request device status enabled/disabled" check box after CPU startup and optionally in the "Output message on status transition" check box.
?	black	Component cannot be accessed/Status cannot be determined • For example, "Status cannot be determined" is always displayed while the CPU is in STOP mode, or during startup evaluation of "Report system error" for all the configured I/O modules and I/O systems after a CPU restart. • However, this status can also be displayed temporarily during operation if a diagnostic interrupt burst occurs at all modules. • It is not possible to determine the status of modules on a subsystem that is connected to a CP.
	green	Maintenance required

Symbol	Color	Meaning
	yellow	Maintenance requested
	red	Error - component failed or faulty
	-	Error in a lower module level

Navigation to further module levels

The status of individual components/modules/submodules is displayed when you navigate to the further module levels:

- To higher module levels using the links in the display of the module levels ②
- To lower module levels using the links in the "Name" column

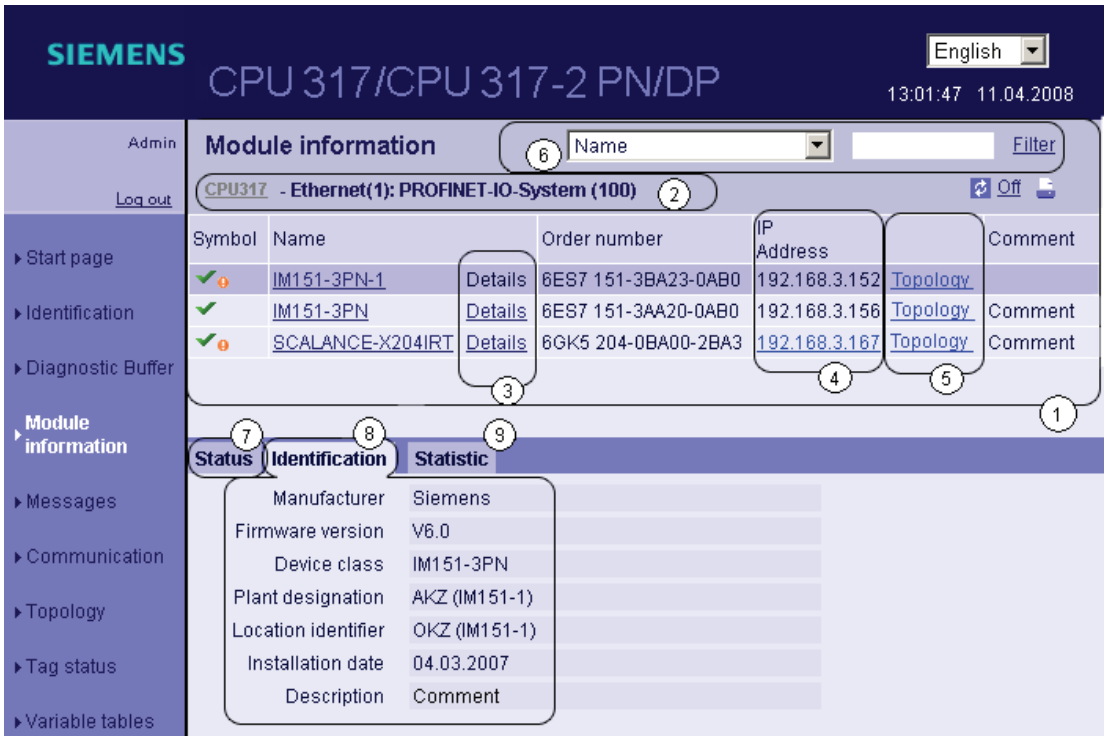

Figure 3-8 Module information - module

① "Module information"

Depending on the selected level, the table contains information about the rack, the DP master system, the PNIO master system, about the nodes, the individual modules, or also the modules or submodules of the station.

② "Display of the module levels"

The links are used to access the "Module information" of the higher module levels.

③ "Details"

Further information about the selected module is provided in the "Status" and "Identification" tabs via the "Details" link.

④ "IP address"

If a link is available, you can use it to access this Web server of the configured device you selected.

⑤ "Topology"

The two web pages, "Topology" and "Module information", are linked. A click on "Topology" of the selected module automatically takes you to this module in the graphic view of the target topology on the "Topology" Web page. The module appears in the visible area of the "Topology" web page and the device head of the selected module flashes for a few seconds.

⑥ "Filter"

You can search in the table by selecting specific criteria:

1. Select a parameter from the drop-down list box.
2. If applicable, enter the value of the selected parameter.
3. Click "Filter".

The filter criteria are also retained when you update a page.

To deactivate the filter settings, click "Filter" again.

⑦ "Status" tab

The tab contains information about the status of the selected module when a fault or message exists.

⑧ "Identification" tab

The tab contains data on the identification of the selected module.

Note

This tab displays only the data configured offline. Online data of the modules is not included.

⑨ "Statistics" tab (CPU31x PN/DP ≥ V3.2.1 and STEP 7 V5.5)

The tab is displayed for PROFINET IO devices only. It contains the following information related to the communication statistics of the selected IO device.

- Overall statistics - Data packets sent

  You can assess the quality of data transmission on the send line based on the key data in this info box.

- Overall statistics - Data packets received

  The quality of the data transfer on the reception line can be determined from the key data in this info box.

- "Statistics port x - Data packets transmitted"

  The quality of the data transfer on the send line can be determined from the key data in this info box.

- "Statistics port x - Data packets received"

  The quality of the data transfer on the reception line can be determined from the key data in this info box.

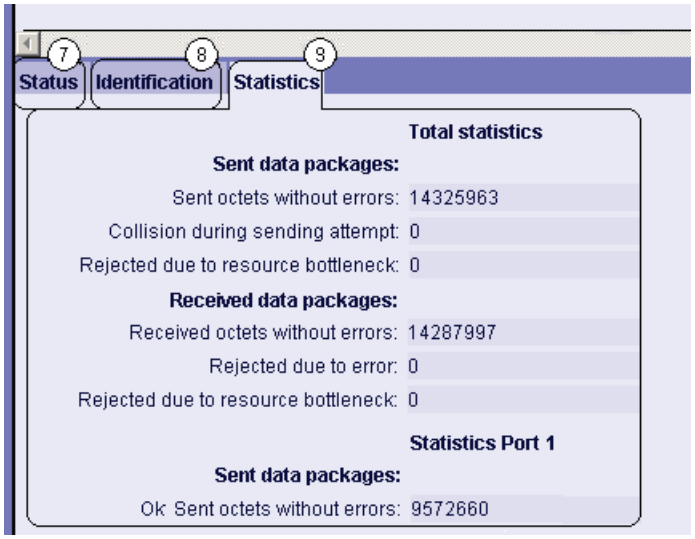

Reference

Refer to the "Statistics" tab in the "Communication" (Page 114) chapter.

Example: Module information - module

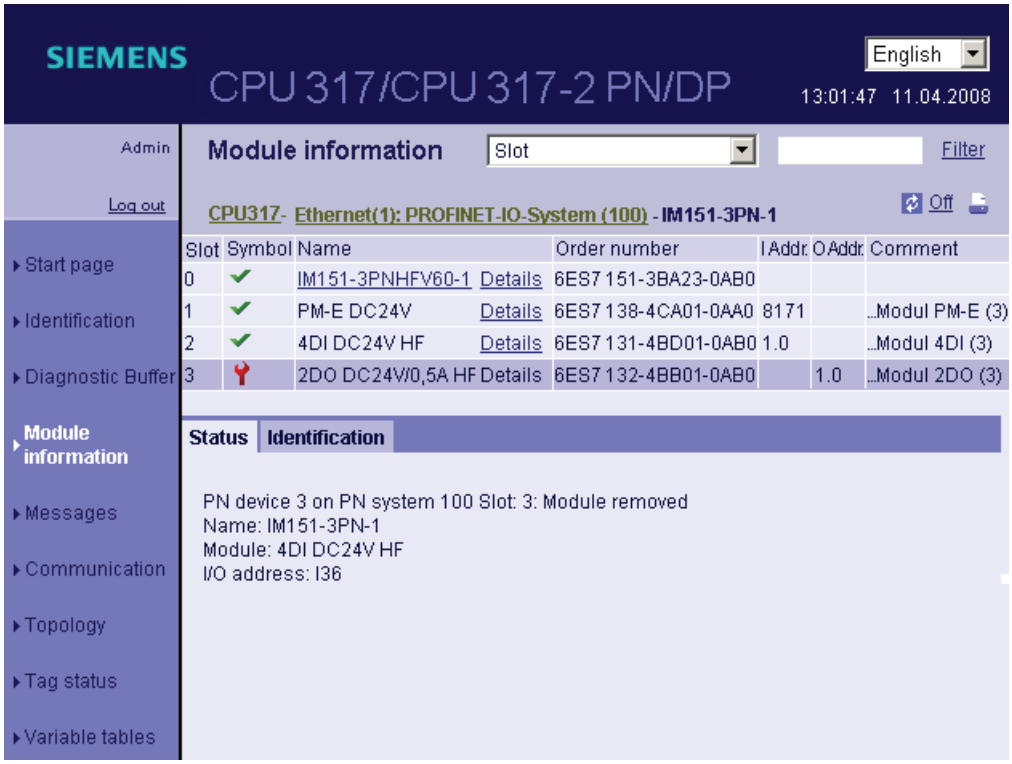

Figure 3-9 Module information - module

Example: Module information - submodule

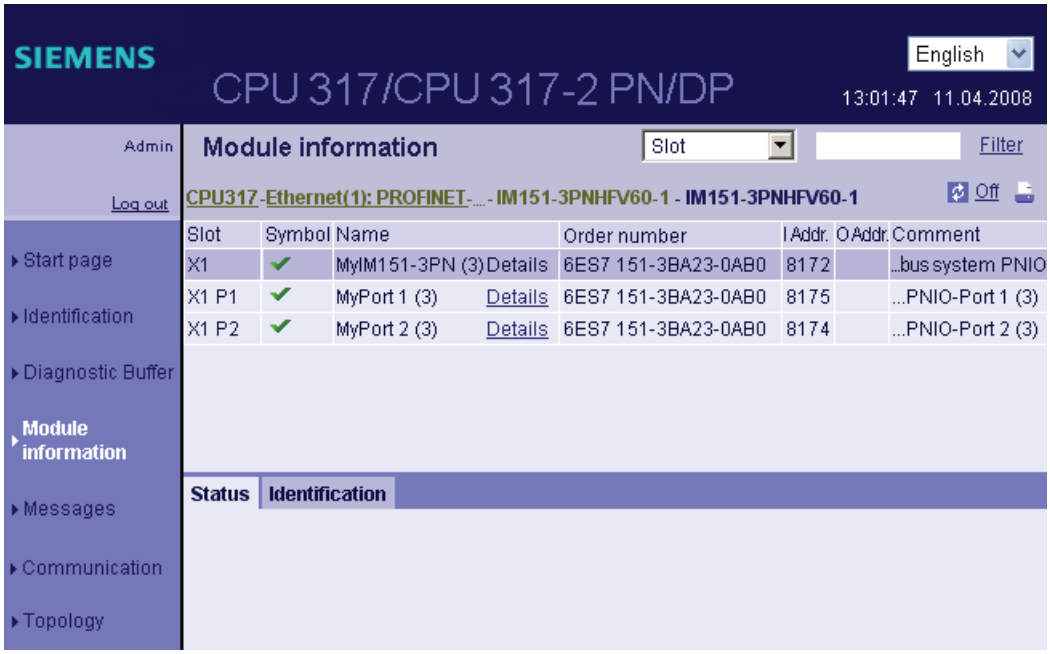

Figure 3-10 Module information - submodule

Reference

For additional information about "Module information" and about the topic "Configuring 'Report System Errors'", refer to the *STEP 7 Online Help*.

3.7.4.5 Messages

Requirements

The message texts were configured in the user-specific languages. For information about configuring message texts refer to STEP 7 and to the Service&Support pages (http://support.automation.siemens.com/WW/view/en/23872245).

Messages

The browser displays the content of the message buffer on the "Messages" web page. The messages cannot be acknowledged on the web server.

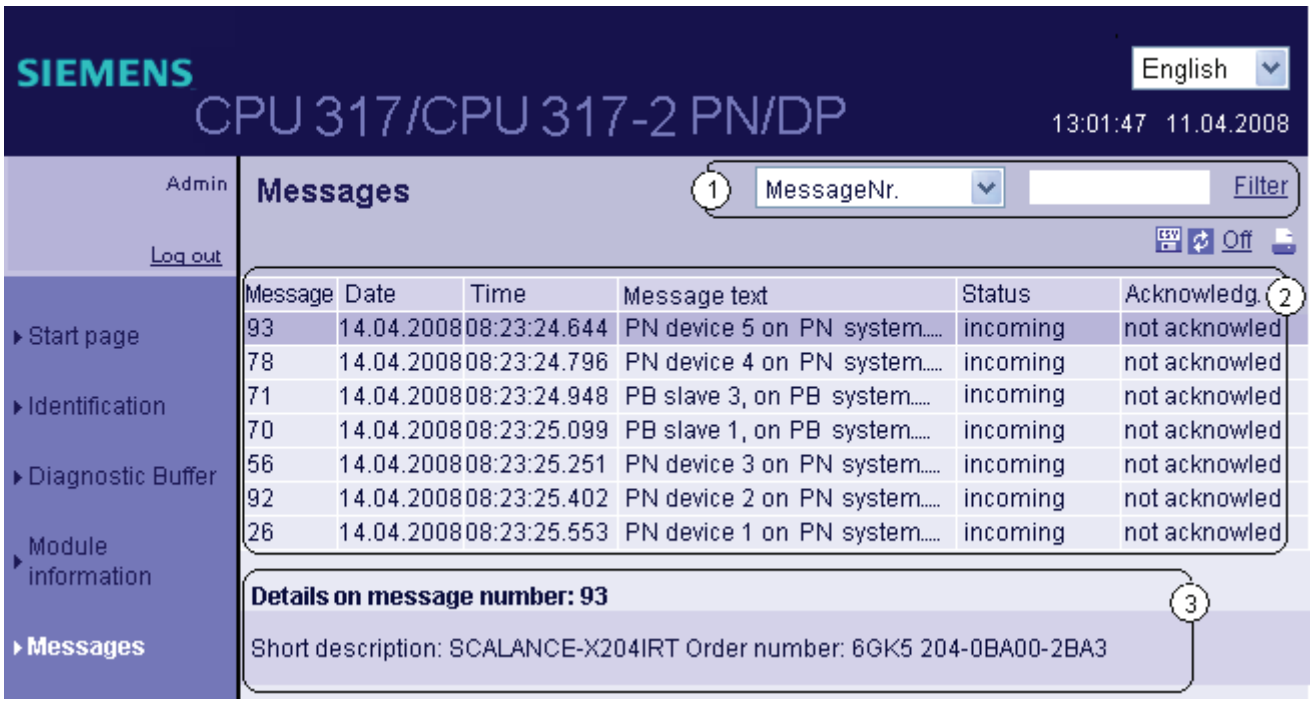

Figure 3-11 Messages

① "Filter"

You can filter the table based on specific criteria.

1. Select a parameter from the drop-down list box.
2. If applicable, enter the value of the selected parameter.
3. Click "Filter".

The filter criteria remain active after automatic page updates.

To deactivate the filter settings, click "Filter" again.

Effects

- The filter settings are also retained when you update a page.
- Filter settings have no effect on the print-out. A printout always contains the entire content of the message buffer.

② "Messages"

Messages of the CPU are displayed in the info field ② in chronological order, including **date** and **time**.

The **message text** parameter is an entry which contains the message texts configured for the corresponding fault definitions.

Sorting

You can also view the individual parameters in ascending or descending order. Click in the column header of one of the parameters:

- Message number
- Date
- Time
- Message text
- Status
- Acknowledgment

The messages are returned in chronological order when you click the "Date" entry. Incoming and outgoing events are output at the **Status** parameter.

③ "Message number details"

You can view detailed message information in this info field. Select the corresponding message from the info field ②.

Special features when changing languages

You can change the language, e.g. from German to English, in the upper right corner. If you select a language or corresponding message texts you have not configured, the program returns a hexadecimal code instead of plain text information.

3.7.4.6 Communication

Overview

The "Communication" Web page provides more information about the following tabs:

- Parameters
- Statistics
- Resources
- Open User Communication

① "Parameters" tab

A summary of the information related to the integrated PROFINET interface of the CPU is available in the "Parameters" tab.

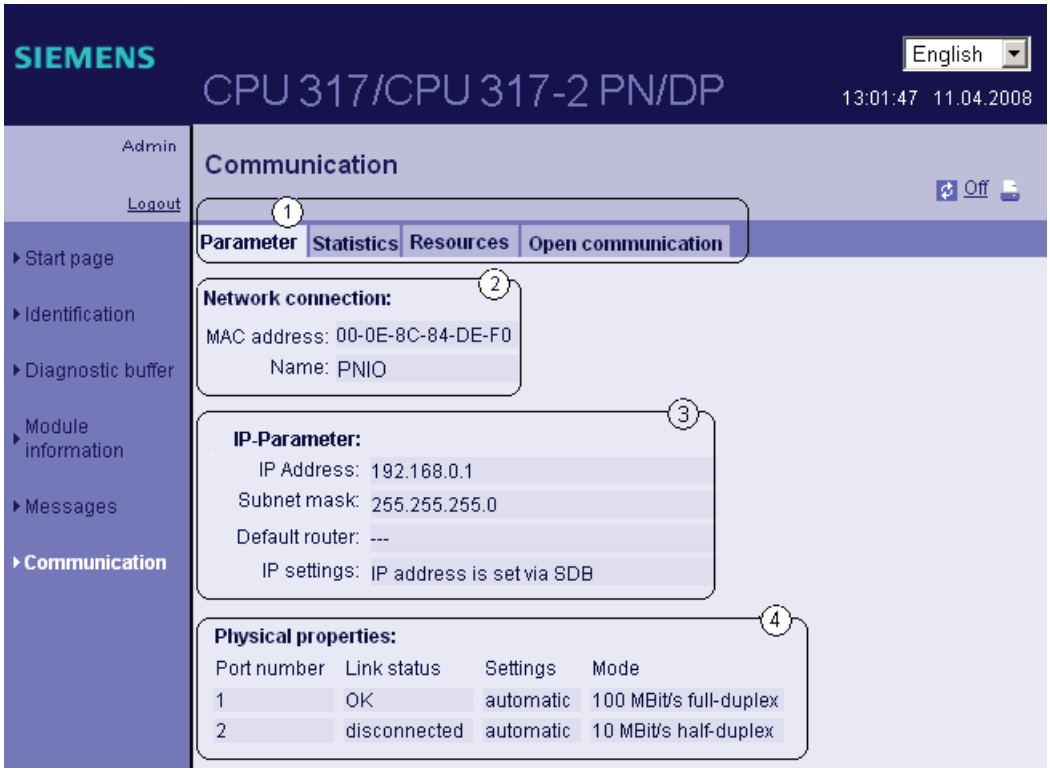

Figure 3-12 Parameters of the integrated PROFINET interface

② "Network connection"

This page displays information for the identification of the integrated PROFINET interface of the corresponding CPU.

③ "IP parameters"

Information about the configured IP address and number of the subnet to which the corresponding CPU is connected.

④ "Physical properties"

Information available in the "Physical properties" info field:

- Port number
- Link status
- Settings
- Mode

"Statistics" tab

Information about the quality of data transfers is available in the ① "Statistics" tab.

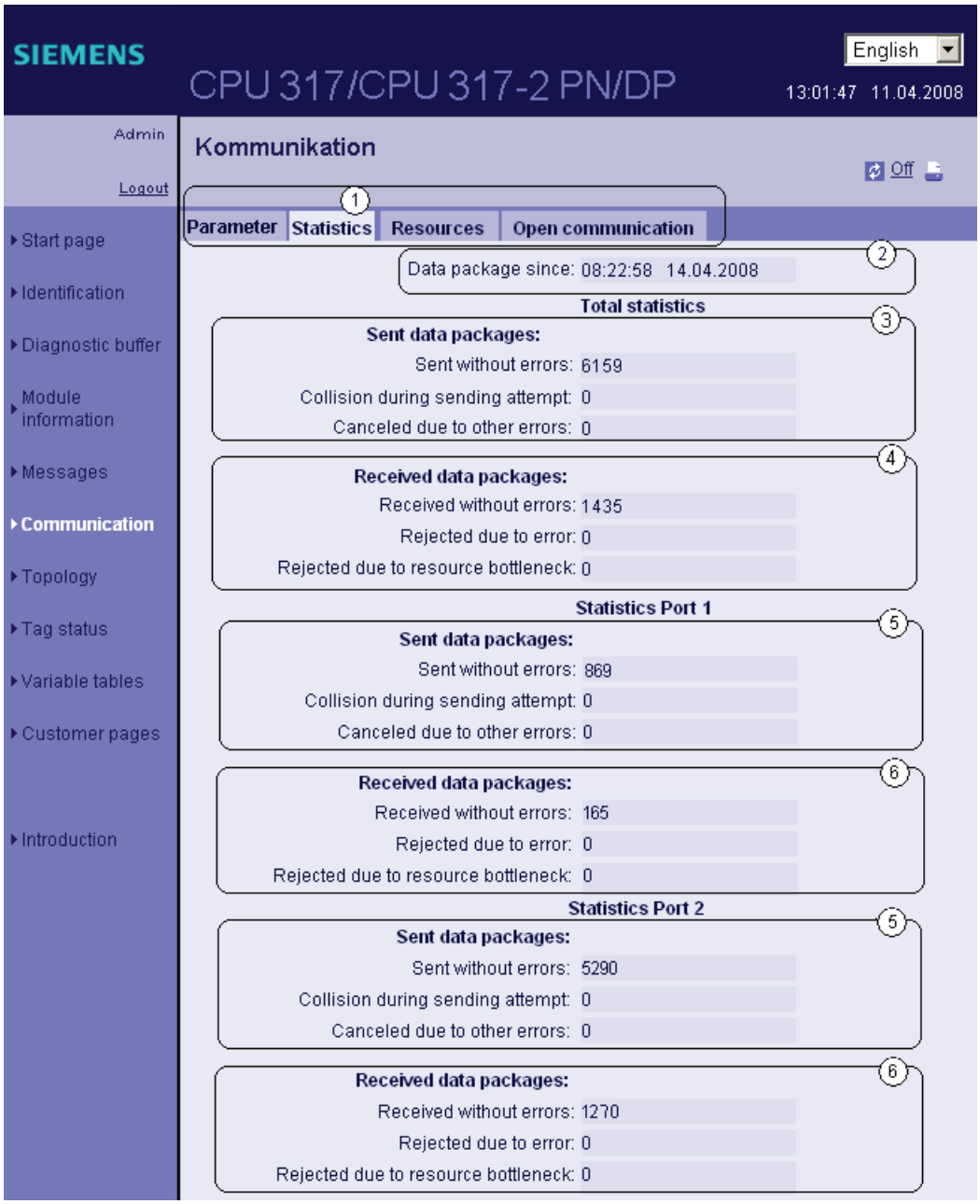

Figure 3-13 Data transfer key data

② "Data packets since"

This shows the time at which the first data packet was sent or received after the last Power on/memory reset.

③ "Overall statistics - Data packets sent"

The quality of the data transfer on the send line can be determined from the key data in this info box.

④ "Overall statistics - Data packets received"

The quality of the data transfer on the reception line can be determined from the key data in this info box.

⑤ "Statistics port x - Data packets transmitted"

The quality of the data transfer on the send line can be determined from the key data in this info box.

⑥ "Statistics port x - Data packets received"

The quality of the data transfer on the reception line can be determined from the key data in this info box.

① The "Resources" tab

For information about the load of connections on resources, refer to the "Resources" tab.

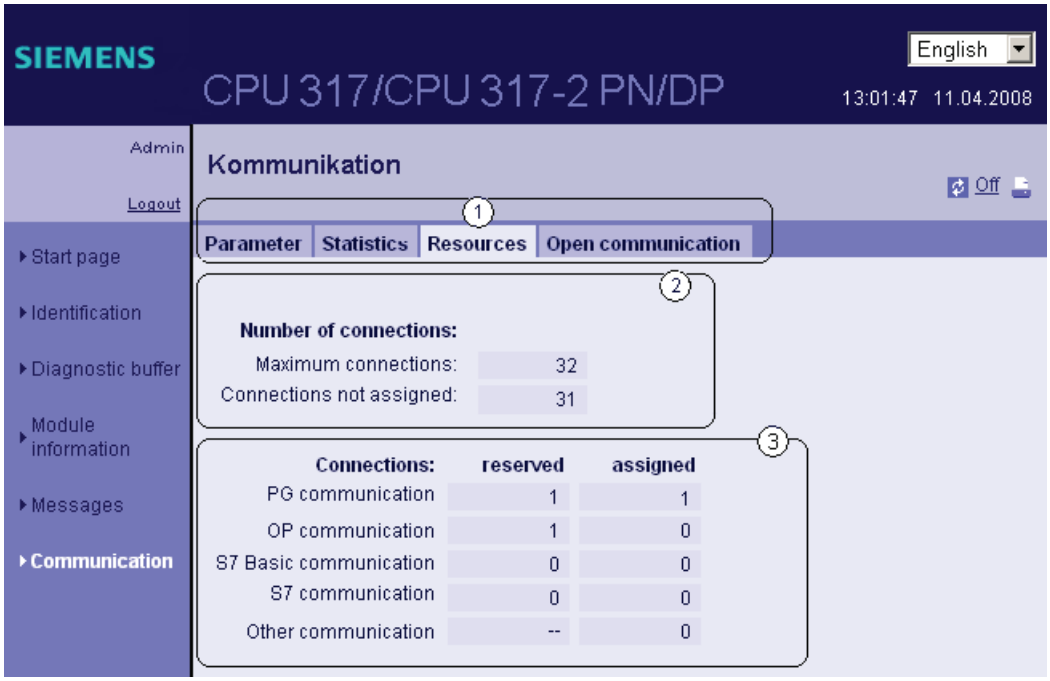

② Number of connections

Provides information on the maximum number of connection resources currently not in use.

③ Connections

Provides information about the number of connections reserved or used for PG, OP, and S7 basic communication, S7 communication, and other communication functions.

"Open User Communication" tab

Information about the status of the communication links is available in the ① "Open User Communication" tab.

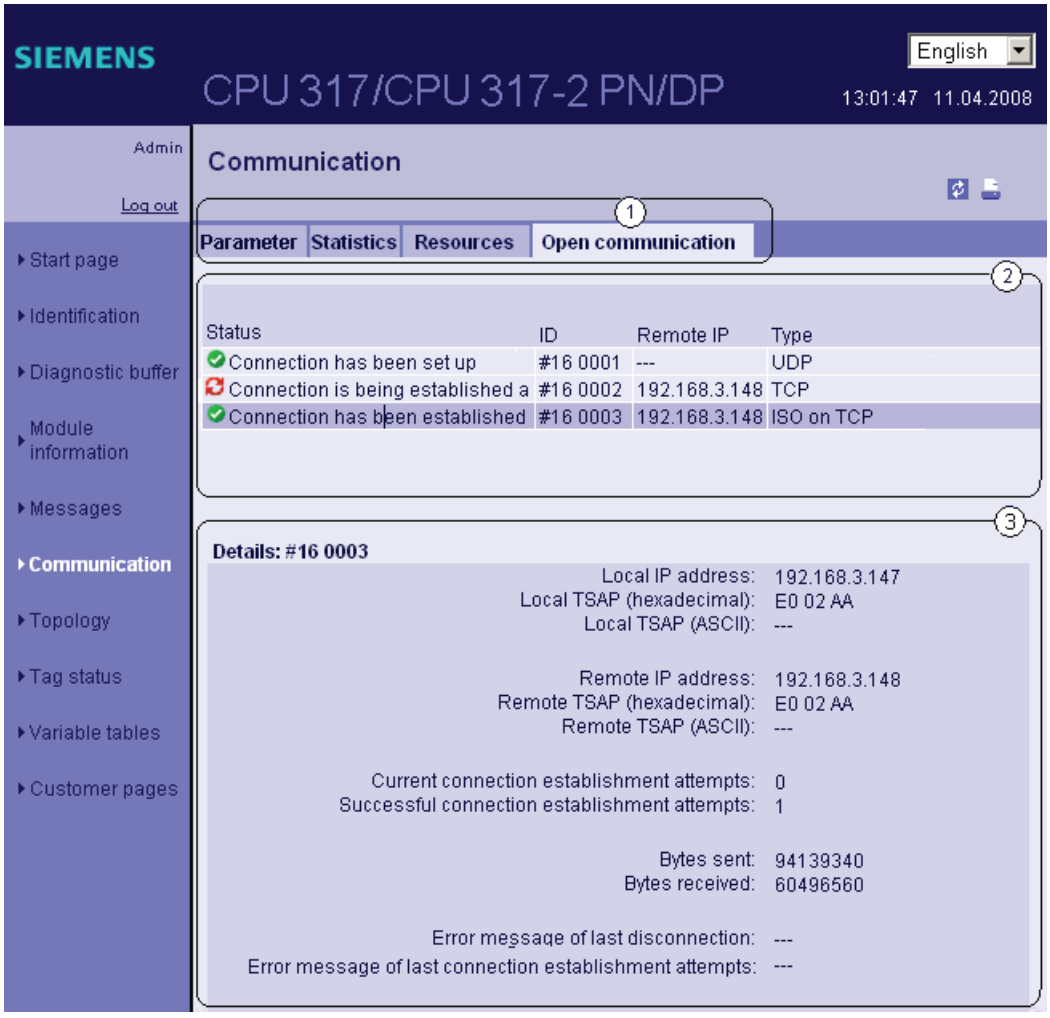

② Status information

Provides an overview of Open User Communication connections on Industrial Ethernet which are currently being set up and of those which are already active or configured.

The table contains the following information for each connection:

- "Status" column: Connection status, including the symbol
- "ID" column: Connection ID
- "Remote IP" column: Remote IP address
- "Type" column Connection type

The possible connection states depend on the connection type. This dependency is shown in the following table:

Connection type	Possible connection states	Meaning
TCP, ISO on TCP	An active/passive connection is set up.	You called the TCON block to initiate the request for an active/ passive connection.
	An active/passive connection is set up.	The connection initiated with the TCON block is set up.
UDP	Connection is configured	-

The following symbols are used to indicate the connection status:

Symbol	Color	Meaning
	green	• Connection is configured (for UDP) • An active/passive connection is set up (for TCP and ISO on TCP)
	red	• An active/passive connection is being set up (for TCP and ISO on TCP)

③ Details

Provides more information about the connection selected.

Reference

For information about the error messages possibly displayed due to cancellation or failed attempts to set up a connection, refer to the STEP 7 Online Help.

3.7.4.7 Topology

Topology of the PROFINET nodes

The "Topology" Web page provides information about the topological configuration and status of the PROFINET devices on your PROFINET IO system.

There are three tabs for the following views:

- Graphical view (target and actual topology)
- Tabular view (actual topology only)
- Status overview (excluding topological correlations)

The tabular view and status overview can be printed. Before printing, use the print preview of your browser and, if necessary, correct the format.

Target topology

In the Topology Editor of STEP 7, display of the configured topology of PROFINET devices set up on a PROFINET IO system, including corresponding status information. The display includes neighboring PROFINET devices, provided their topological layout is configured as well. However, a status view is not provided at this point.

The view identifies the topological assignment of PROFINET devices that have failed, the differences between the target and actual topology, and interchanged ports.

Note

The configured target topology is always displayed in the following scenarios:

- When the "Topology" web page is called via the navigation bar
- When you change from the overview of PROFINET IO devices on the "Module information" Web page to the "Topology" Web page by means of "Topology" link

If no target topology was configured, the actual topology is called by default.

Actual topology

Displays the actual topological layout of the "configured" PROFINET devices and the directly adjacent, non-configured PROFINET devices (display of the relations, provided these can be determined. However, the status of these adjacent PROFINET devices is not displayed).

Requirements

For error-free operation of the topology, the following conditions must be met:

- You completed the language settings.
- In the Topology Editor of STEP 7, you configured the topological interconnection of ports (requisite for the display of the target topology and corresponding topological target connections).
- You compiled the configuration data in HW Config.
- "Report system errors" is generated.
- The download of all project data is completed (configuration and program data).

Target and actual topology - graphical view

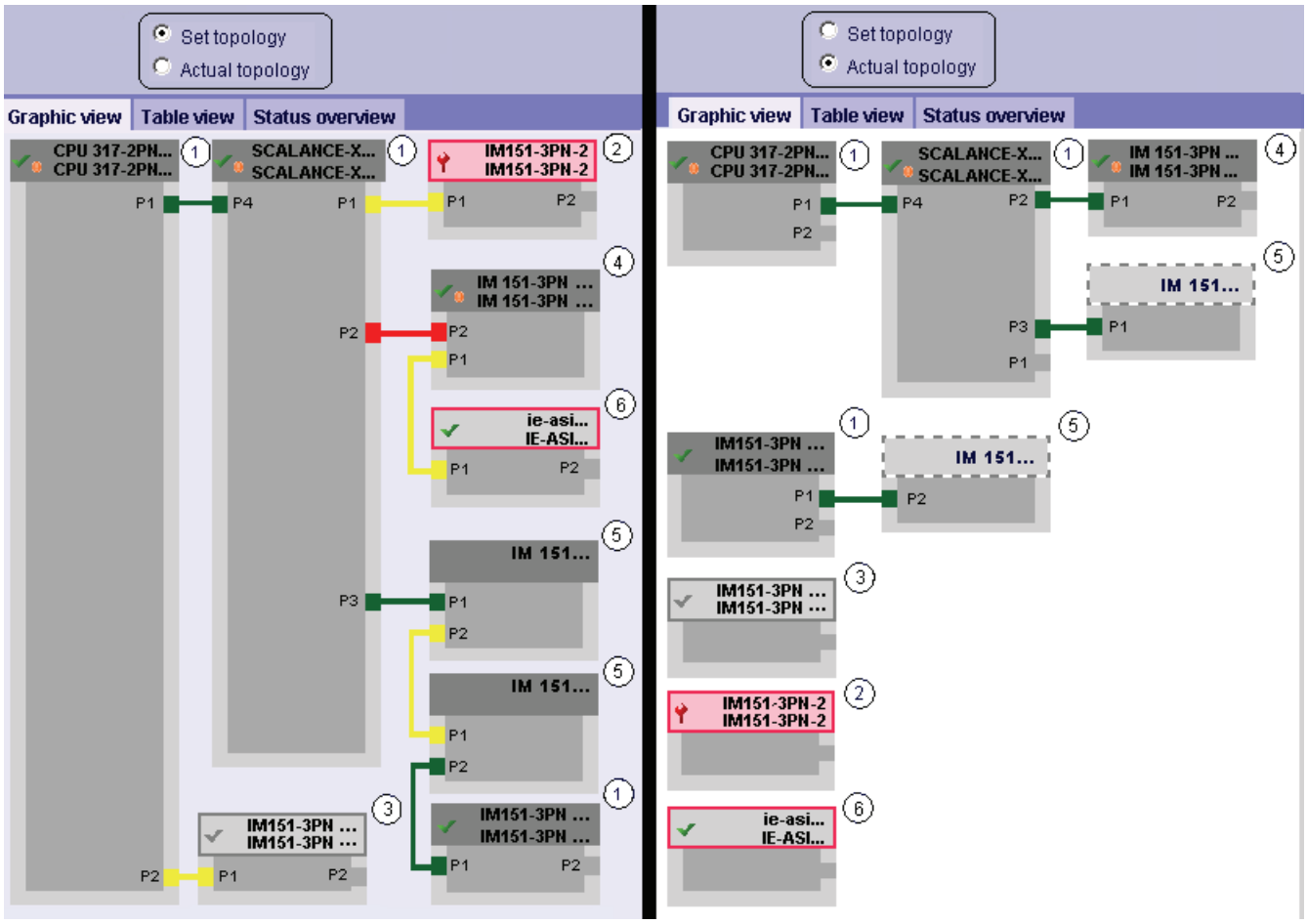

Figure 3-14 Graphical view - Target and actual topology

Meaning of the colored connections in the target/actual topology:

Connection	Meaning	
	Target topology	Actual topology
green	The current actual connection matches the configured target connection.	Connections detected
red	Mismatch between the current actual connection and the configured target connection (e.g., port interchanged).	-
yellow	Connection diagnostics not possible. Causes: • Malfunction of communication with a device (e.g. cable was removed) • Connection to a passive component • Connection to devices/PROFINET devices on a different IO controller or IO subsystem.	-

① Configured and accessible PROFINET nodes

Configured and accessible PROFINET nodes are displayed in dark gray. Display the ports used to connect the PROFINET nodes of a station.

② Configured but inaccessible PROFINET nodes

Configured but inaccessible PROFINET nodes are indicated in pink color with red frame (e.g. device failure, cable disconnected)

③ Deactivated nodes

All disabled configured PROFINET nodes are indicated in light gray.

④ Interchanged ports

Interchanged ports are highlighted in red color in the target topology view. The actual topology view indicates the actually connected ports, while the target topology view displays the configured target connections.

⑤ PROFINET devices of a different PROFINET IO subsystem

- In the target topology:

  A PROFINET device of a different PROFINET IO subsystem is identified by means of a green link (or red link for interchanged ports) if available on the bus and directly adjacent to an accessible configured PROFINET device ①.
  A PROFINET device that cannot be accessed from a different PROFINET IO subsystem is identified by means of a yellow link.
  The connection between two PROFINET devices which belong to a different PROFINET IO subsystem cannot be identified and is always indicated in yellow color.

- In the actual topology:

  The PROFINET device of a different PROFINET IO subsystem is not displayed unless directly adjacent to a configured PROFINET device. This device is indicated by means of a light gray dashed line.

The status of PROFINET devices of a different PROFINET IO subsystem is **not** displayed in the device header.

⑥ Displaying faulty neighbor relationships

Nodes whose relation data could not be read completely or with error are highlighted in light gray with a red frame.

Note

Displaying faulty neighbor relationships

A firmware update of the affected component is required.

Views after changes to the configuration

- After having failed, this device remains at the same position in the "Target topology" view. This error state is indicated by means of a device header with red frame and a red wrench.
- After having failed, the device is displayed in the bottom area of the in the "Actual topology" view. This error state is indicated by means of a device header with red frame and a red wrench.

Link between the "Topology" and "Module information" Web pages

The two web pages, "Topology" and "Module information", are linked. A click on the header of a selected module in the topology view automatically takes you to this module on the "Module information" Web page.

See also the "Module information (Page 106)" chapter.

Topology - tabular view

The "Tabular view" always shows the "Actual topology".

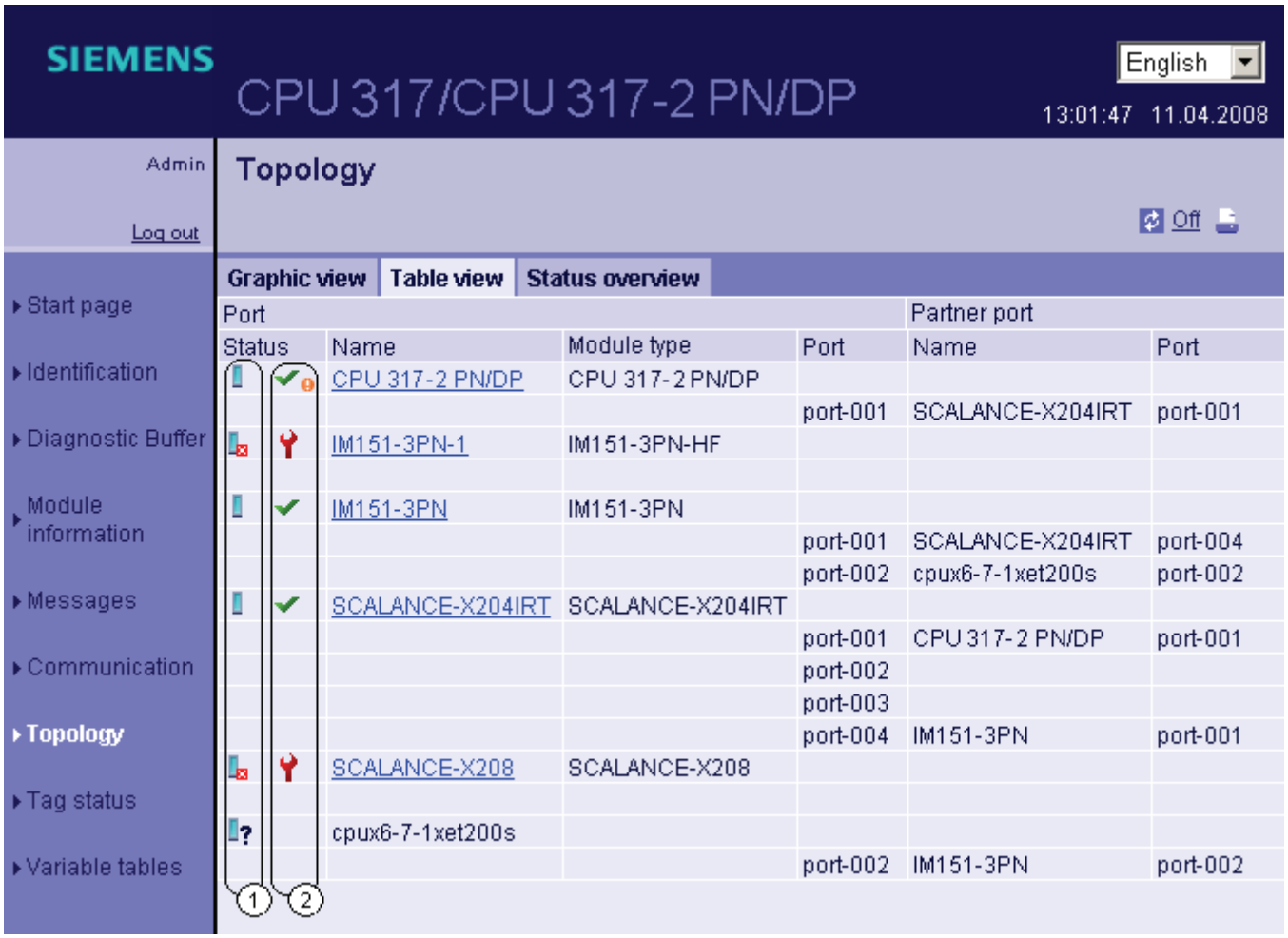

Figure 3-15 Topology - tabular view

① Meaning of the symbols relating to the status of the PROFINET nodes

Symbol	Meaning
	Configured and accessible PROFINET nodes
	Unconfigured and accessible PROFINET nodes
	Configured but inaccessible PROFINET nodes
	Nodes for which neighbor relations cannot be determined or for which the neighbor relationship could not be read out completely or only with errors

① Meaning of the symbols relating to the module status of the PROFINET nodes

Symbol	Color	Meaning
	green	Component is OK
	gray	Disabled PROFIBUS slaves or PROFINET devices Support conditions: • CPU31x PN/DP ≥ V3.2.1 and STEP 7 V5.5 + possibly required HSP for the CPU • Enabling/disabling the PROFIBUS slaves and PROFINET IO devices using SFC12 mode 3/4. • In the "Report system errors" dialog, "Diagnostics support" tab, "Status enabled/disabled" area, the check mark must be set in the "Request device status enabled/disabled" check box after CPU startup and optionally in the "Output message on status transition" check box.
	black	Component cannot be accessed/Status cannot be determined • For example, "Status cannot be determined" is always displayed while the CPU is in STOP mode, or during startup evaluation of "Report system error" for all the configured I/O modules and I/O systems after a CPU restart. • However, this status can also be displayed temporarily during operation if a diagnostic interrupt burst occurs at all modules. • It is not possible to determine the status of modules on a subsystem that is connected to a CP.
	green	Maintenance required
	yellow	Maintenance requested
	red	Error - component failed or faulty
	-	Error in a lower module level

Topology - status overview

The "Status overview" provides a clear presentation of all PROFINET IO devices/PROFINET devices (without connection relations) on one page. A quick error diagnostics is possible based on the symbols that show the module statuses.

The overview also provides a link of the modules to the "Module information (Page 106)" Web page.

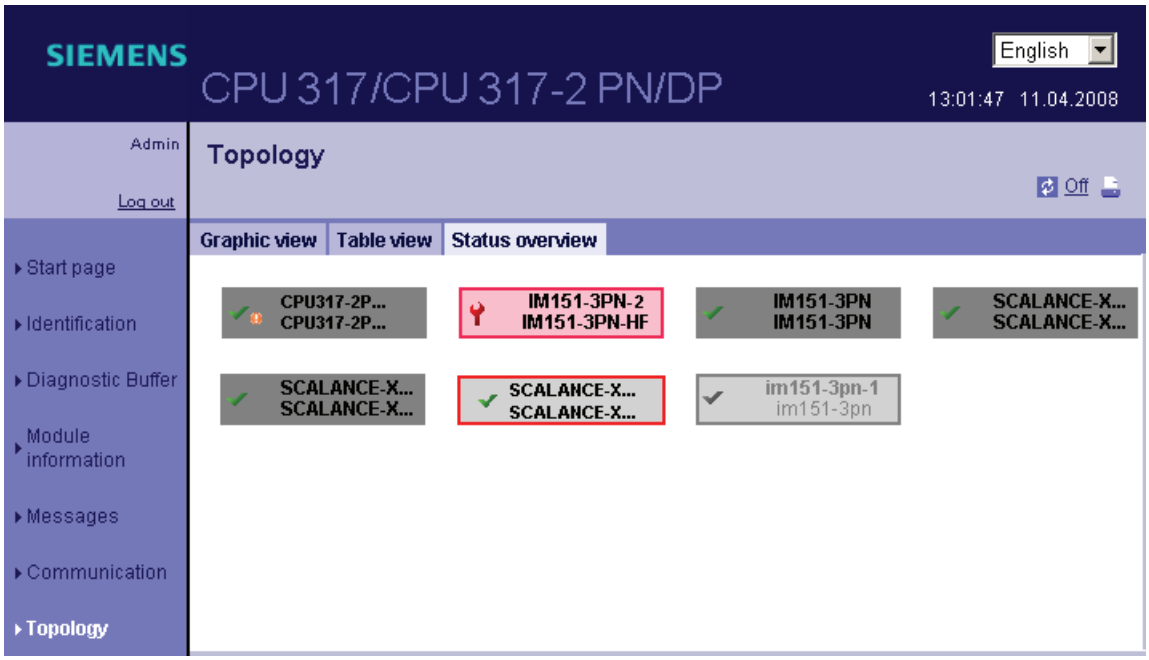

Figure 3-16 Topology - status overview

3.7.4.8 Status of the variables

Status of the variables

The browser outputs the variable status on the web page of the same name. You can monitor the status of up to 50 variables.

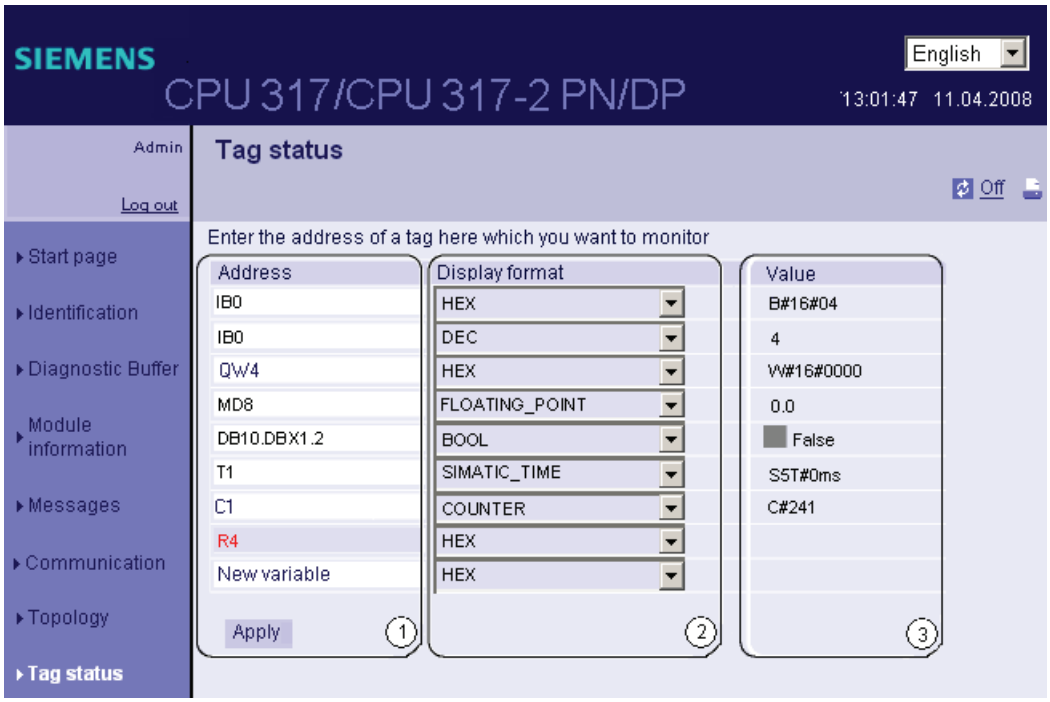

Figure 3-17 Status of the variables

① "Address"

In the "Address" text field, enter the address of the operand whose behavior you want to monitor. Invalid addresses entered are displayed in red font.

② "Display format"

Select the required display format of a variable in the drop-down list box. The variable is displayed in hexadecimal code if it cannot be displayed in the selected display format.

③ "Value"

Outputs the value of the corresponding operand in the selected format.

Special features when changing languages

You can change the language, e.g. from German to English, in the upper right corner. The German mnemonics differ compared to other languages. The syntax of operands you enter may therefore be invalid when you change languages. For example: ABxy instead of QBxy. The browser outputs a faulty syntax in red font.

3.7.4.9 Variable tables

Variable tables

The browser displays the content of the variable tables which support Web functionality on the Web page of the same name.
You can monitor up to 200 variables in each variable table.

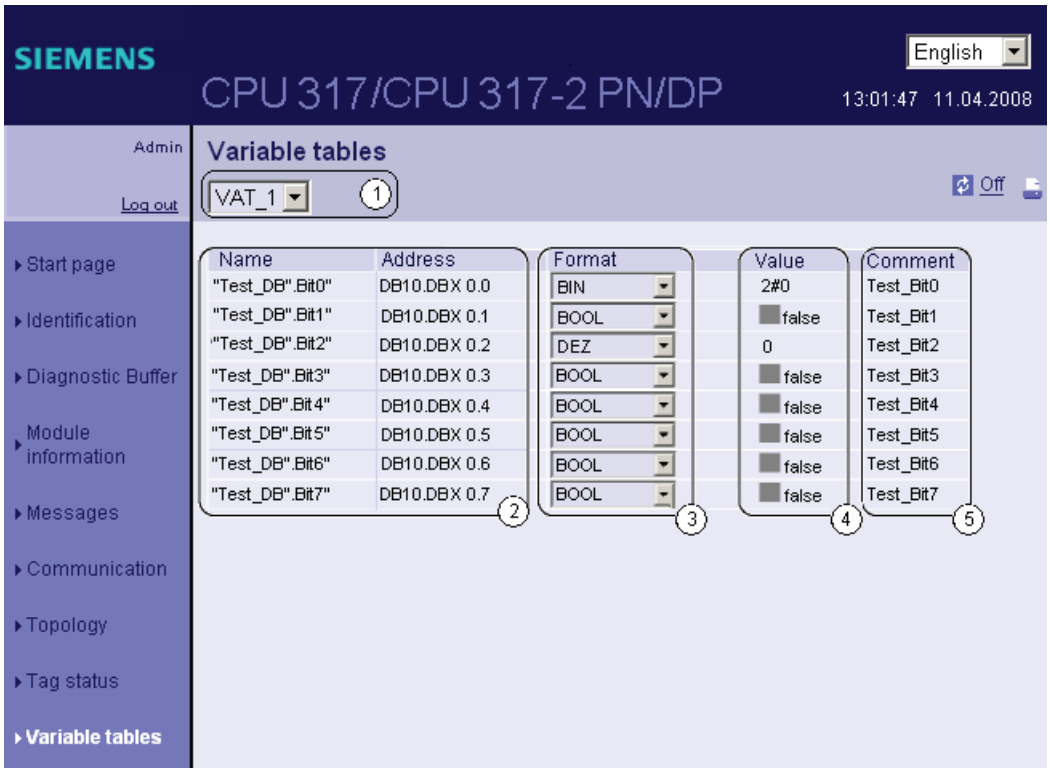

Figure 3-18 Variable tables

① Selection

Select one of the configured variable tables from this drop-down list box.

② "Name" and "Address"

This info field indicates the operand's name and address.

③ "Format"

Select the display format of the corresponding operand using the drop-down list boxes. The drop-down list box outputs a selection of all valid display formats.

④ "Value"

This column shows the values in the corresponding display format.

⑤ "Comment"

The comment you configured is shown in order to highlight the meaning of an operand.

Configuring variable tables for the web server

The web server lets you monitor up to 50 variable tables with up to 200 variables each. As the available CPU memory is shared by messages and variables, the actually available number of variable tables may be reduced.

Example: There is sufficient memory space for approximately 400 configured messages and 50 variable tables with 100 variables each (including the symbol names, but without symbol comment).

The web browser only outputs partial variable tables if memory capacity is exceeded due to the number of configured messages and variables. You counteract this negative effect by reducing memory requirements for your messages and symbol comments. You should also use only one language to display information, if possible.

You should also configure your variable tables with as few variables as possible, with short names and comments, in order to ensure that the variable tables are displayed in full by the web server and will also be updated faster than tables containing a large number of variables (limited memory of the CPU).

Creating a variable table for the web server

1. Generate a variable table in STEP 7.
2. Open the properties dialog of the variable table and select the "General - Part 2" tab.
3. Activate the "Web server" checkbox.

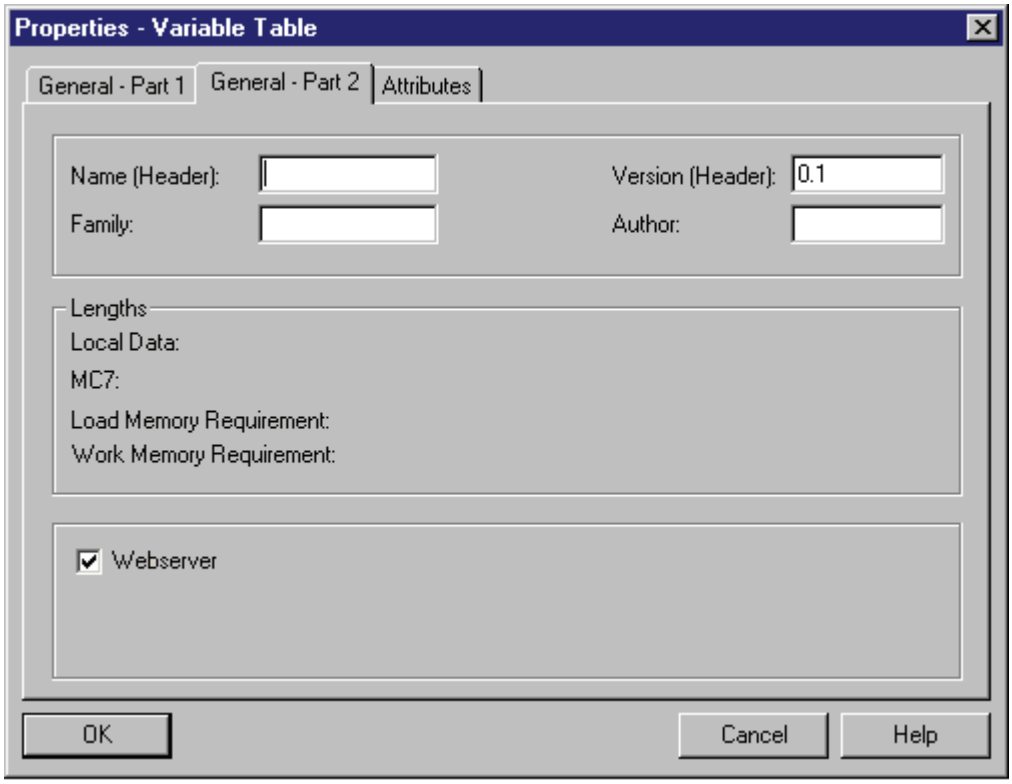

4. Save and compile the project and download the configuration data to the CPU.

3.7.4.10 User pages

User pages

This Web page provides the link to your programmable user page.

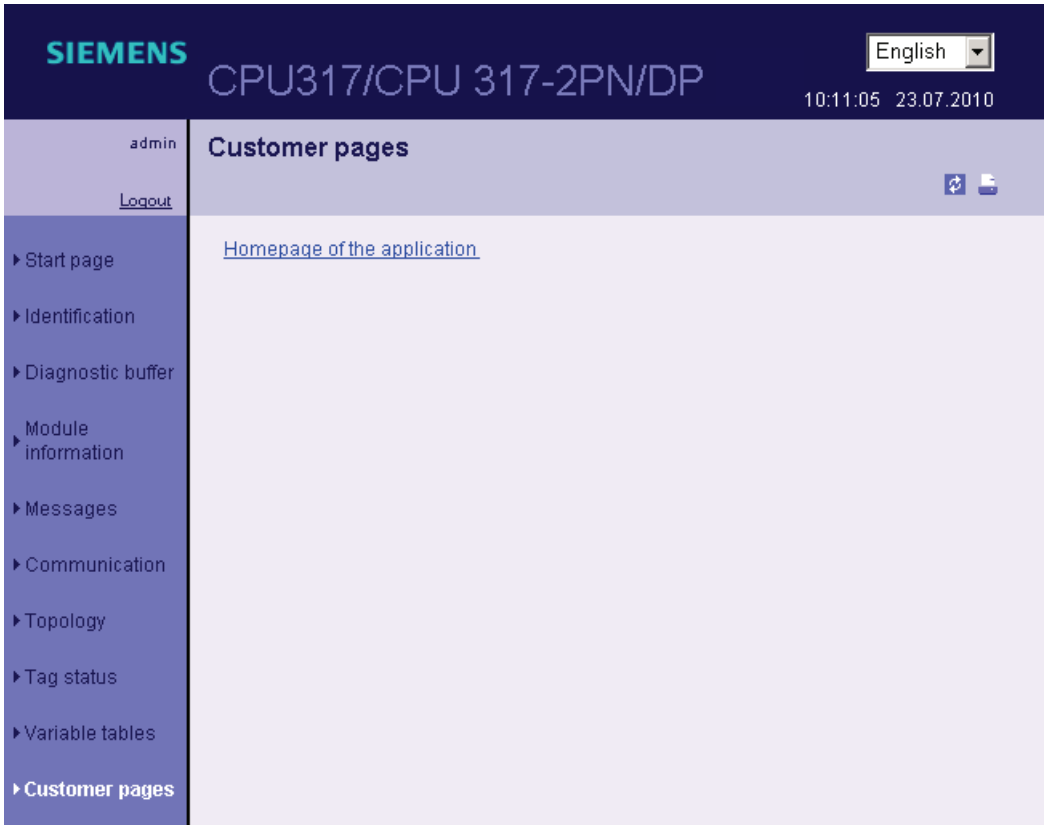

Figure 3-19 User pages

The Web server allows you to create user-specific HTML pages with CPU data content. Accordingly, create the user page in a Web Editor of your choice, using the symbols from the STEP 7 user program. The Web2PLC application included with your STEP 7 package converts the user page you created into data blocks. These DBs are downloaded to the CPU. System function SFC 99 "WWW" links the user program to the internal Web server on the CPU. At the first call of SFC 99 "WWW", the link to the user page is displayed on the CPU's Web page. A click on the link opens the user page in a new window.

No more than two user pages can be activated at any given time.

Requirements

- In your STEP 7 project, you have created the symbols for the I/O variables you want to use on your user page
- On the "Web" tab of the CPU properties dialog, you have at least:
  - activated the Web server
  - entered a user in the user list
  - assigned this (and other) user read/write authorizations (see chapter "Settings in HW Config, 'Web' tab" (Page 97))
- You completed all necessary communication settings (IP address parameter, subnet mask, etc.)
- You saved and downloaded the hardware configuration
- You created your user page in an HTML Editor of your choice:
  - Automatic HTML pages, if you want to **disable** control the page layout by means of the user program (requires at least one call of SFC 99)
  - Manual HTML pages, if you want to **enable** control the page layout by means of the user program (requires the cyclic call of SFC 99)
- You installed the Web2PLC application for STEP 7 included on your product CD (installation path: CD2: \Optional Components\S7 Web2PLC\)

Creating dynamic user pages

To create dynamic user pages, use AWP commands (Advanced Web Programming) on your HTML user page. AWP commands represent a Siemens instruction set that can be used to access CPU information. For information on AWP commands, refer to the Web2PLC Online Help.

Procedure

1. In SIMATIC Manager, select the "Blocks" folder in the S7 program of the CPU and then select "S7-Web2PLC" from the shortcut menu. The S7-Web2PLC program starts.
2. Select **File > New project…** and enter a project name.
3. Select **File > Edit project settings ...** .
   The project settings dialog opens.
4. On the "General" tab, specify the path to your HTML folder.
5. Specify the HTML file to start as user page and the application name.
6. On the "STEP 7" tab, specify the DB numbers (default is 333 and 334)
   Confirm your entries with **OK**. The dialog for the STEP 7/Web project opens.
7. Open your user page in the HTML Editor. Using the AWP commands and symbolic names from STEP 7, reference the variables to be available on your user page. Consult the Web2PLC Online Help.
8. Once you have edited and saved the HTML page, return to your S7-Web2PLC project. Click the following buttons in succession:
   - "Export symbols"
   - "Generate DB source"
   - "Compile DB source"

   The corresponding actions are carried out and a control DB ("Web DB"), including at least one fragment DB, will be created in the "Blocks" folder of the S7 program of the CPU.
9. Click the "Download to CPU" to download the DBs to the CPU.

Note

The CPU should be in STOP mode before you run this operation. If memory resources are exceeded during the download of WEB DBs in RUN mode, synchronization errors could develop when the user program accesses the control DB.

Reference

For more information and a description of the areas that you can modify, refer to the Web2PLC Online Help.

For additional information about the SFC 99 block, refer to the *STEP 7 Online Help*.

For more information on visualization with user-defined web pages on SIMATIC CPUs with PROFINET interface, refer to the Internet (http://support.automation.siemens.com/WW/view/en/44212999).

PROFINET 4

4.1 Communication via PROFINET

4.1.1 Introduction

What is PROFINET?

Within the framework of Totally Integrated Automation (TIA), PROFINET represents a consistent continuation of:

- PROFIBUS DP, the established fieldbus and
- Industrial Ethernet, the communication bus for the cell level

Experience gained from both systems was and is being integrated into PROFINET.

PROFINET is an Ethernet-based automation standard of PROFIBUS International (previously PROFIBUS user organization) and defines a multi-vendor communication, automation, and engineering model.

Objectives of PROFINET

The objectives of PROFINET are:

- Open Ethernet standard for automation based on Industrial Ethernet.
  Although Industrial Ethernet and standard Ethernet components can be used together, the Industrial Ethernet devices are more rugged and therefore better suited for industrial environments (temperature, resistance, etc.)
- Use of TCP/IP and IT standards
- Automation with real-time Ethernet
- Seamless integration of fieldbus systems

Implementing PROFINET in SIMATIC

We have implemented PROFINET as follows:

- Communication between field devices is implemented in SIMATIC by way of **PROFINET IO**.
- Communication between controllers which operate as components in distributed systems is implemented in SIMATIC by means of **PROFINET CBA** (Component Based Automation).
- Installation engineering and network components are available as SIMATIC NET products.
- Established IT standards from the office environment (e.g. SNMP = Simple Network Management Protocol for network parameterization and diagnostics) are used for remote maintenance and network diagnostics.

Documentation from PROFIBUS International on the Internet

Abundant documentation related to PROFINET is available at the Internet URL (http://www.profinet.com) of PROFIBUS & PROFINET International (formerly the PROFIBUS User Organization, PNO).

Additional information can be found on the Internet (http://www.siemens.com\profinet).

What is PROFINET IO?

Within the framework of PROFINET, PROFINET IO is a communication concept for the implementation of modular, distributed applications.

PROFINET IO allows you to create automation solutions which are familiar to you from PROFIBUS.

PROFINET IO is implemented based on the PROFINET standard for programmable controllers.

The STEP 7 engineering tool supports engineering and configuring of an automation solution.

STEP 7 therefore provides the same application view, regardless of whether you are configuring PROFINET or PROFIBUS devices. Generally speaking, the programs for your PROFINET IO and PROFIBUS DP applications are identical, however, for PROFINET IO you must use the extended SFCs/SFBs and system status lists.

What is PROFINET CBA (Component Based Automation)?

Within the PROFINET system, PROFINET CBA (Component Based Automation) is an automation concept that focuses on the following:

- Implementation of modular applications
- Machine to machine communication

PROFINET CBA lets you create distributed automation solutions based on ready-to-use components and partial solutions. This concept meets demands for a higher degree of modularity in the field of mechanical and systems engineering through extensive distribution of intelligent processes.

Component Based Automation allows you to implement complete technological modules form operation as standardized components in large-scale systems.

You create the modular, intelligent components of PROFINET CBA using an engineering tool that could differ depending on the device manufacturer. Components that consist of SIMATIC devices are created in STEP 7 and interconnected using the SIMATIC iMAP tool.

Distinguishing features of PROFINET IO and PROFINET CBA

PROFINET IO and CBA represent two different views of automation devices on Industrial Ethernet.

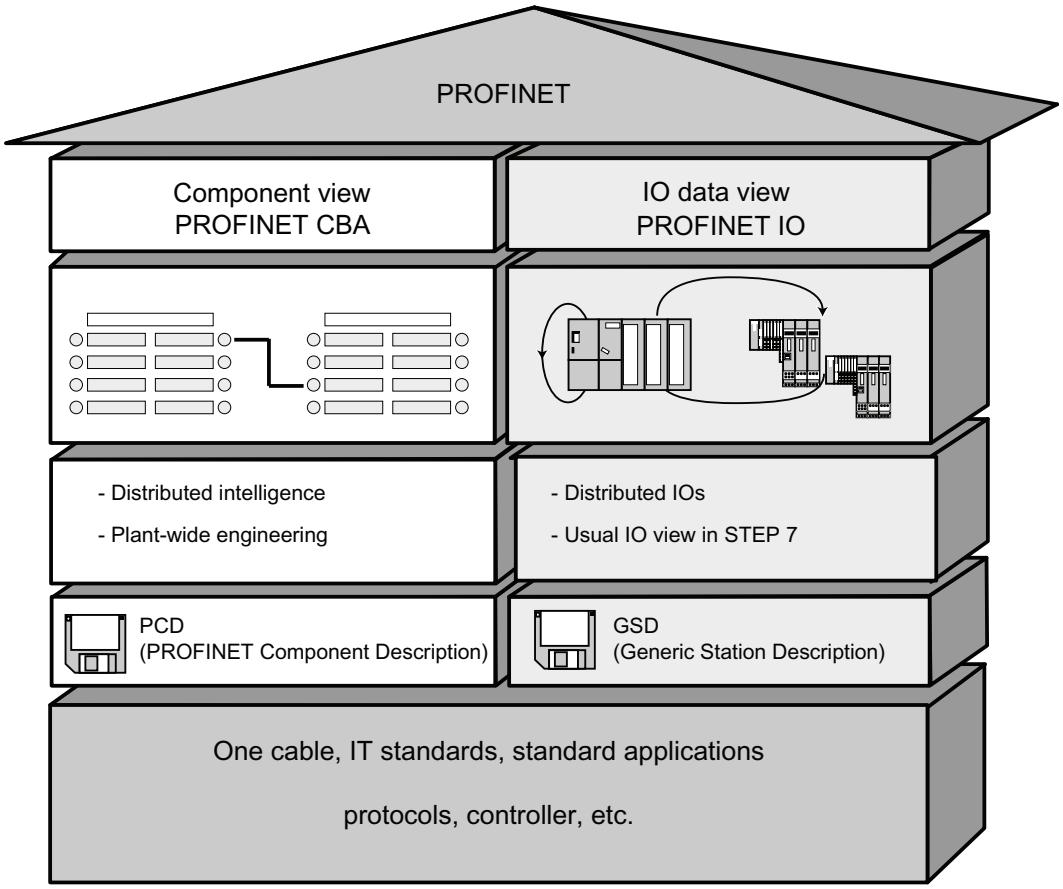

Figure 4-1 Distinguishing features of PROFINET IO and Component Based Automation

Component Based Automation divides the entire plant into various functions. These functions are configured and programmed.

PROFINET IO provides you with a view of the plant that is very similar to the PROFIBUS view. You continue to configure and program the individual programmable controllers.

Reference

Further information

- on PROFINET IO and PROFINET CBA is available in the *PROFINET system description.* For differences and similarities between PROFIBUS DP and PROFINET IO, refer to the *From PROFIBUS DP to PROFINET IO* programming manual.
- For detailed information about PROFINET CBA, refer to the documentation on SIMATIC iMap and Component Based Automation.

4.1.2 PROFINET IO System

Functions of PROFINET IO

The following graphic shows the new functions in PROFINET IO:

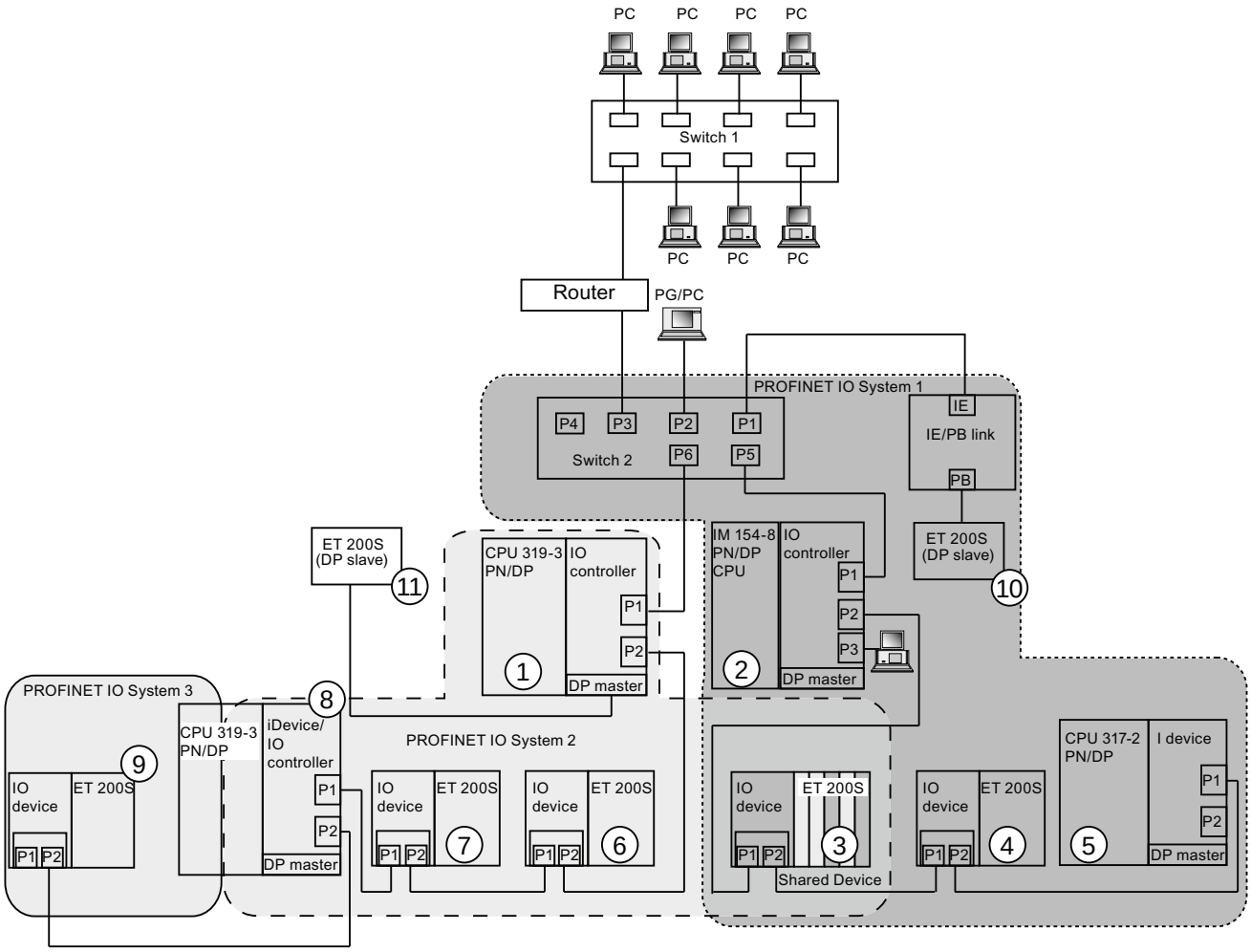

The graphic shows	Examples of connection paths
The connection of company network and field level	You can access devices at the field level from PCs in your company network Example: • PC - Switch 1 - Router - Switch 2 - CPU 319-3 PN/DP ①.
Connections between the automation system and field level	You can also access other areas on the Industrial Ethernet from a programming device at the field level. Example: • PG - integrated switch IM 154-8 CPU ② - Switch 2 - integrated switch CPU 319--3 PN/DP ① - integrated switch IO Device ET 200 S ⑥ - on IO Device ET 200S ⑦.

The graphic shows	Examples of connection paths
The IO controller of the CPU IM 154-8 CPU ② sets up PROFINET IO system 1 and directly controls devices on the Industrial Ethernet and PROFIBUS.	At this point, you can see the IO feature between the IO controller, intelligent device, and the IO devices on the Industrial Ethernet: • IM 154-8 CPU ② acts as IO controller for the IO devices ET 200S ③ and ET 200S ④, for switch 2, and for the intelligent device CPU 317-2 PN/DP ⑤. • IO device ET 200S ③ is operated as shared device, which means that IM154-8 CPU ② operating as controller can access only the (sub)modules it has been assigned as controller for that IO device. • The IM 154-8 CPU ② is also the IO controller for ET 200S (DP slave) ⑩ by way of IE/PB Link.
The CPU 319-3 PN/DP ① operates as IO controller for PROFINET system 2 and, at the same time, as DP master on the PROFIBUS. In addition to other IO devices, this IO controller is used to operate a CPU319-3 PN/DP ⑧ as intelligent device which, in turn, operates a PROFINET subsystem as IO controller.	Here you can see that a CPU can be both the IO controller for an IO device and the DP master for a DP slave: • CPU 319-3 PN/DP ① is the IO controller for the IO devices ET 200S ⑥ and ET 200S ⑦, and for the intelligent device CPU 319-3 PN/DP ⑧. • Moreover, CPU319-3 PN/DP ① shares the IO device ET 200S ③ with IO controller IM 154-8 CPU ②, which means that the CPU319-3 PN/DP ① operating as controller can access only the (sub)modules it has been assigned as controller for that IO device. • CPU319-3 ⑧, which is operated as intelligent device on CPU319-3 PN/DP ①, also acts as IO controller and sets up its own PROFINET system 3 on which the IO device ET 200S ⑨ is operated. • The CPU 319-3 PN/DP ① is the DP master for one DP slave ⑪. The DP slave ⑪ is assigned locally CPU 319-3 PN/DP ① and is not visible on the Industrial Ethernet.

Further information

You will find further information about PROFINET in the documents listed below:

- In the System Description PROFINET
- In the *From PROFIBUS DP to PROFINET IO programming manual.*
  This manual also provides a clear overview of the new PROFINET blocks and system status lists.

4.1.3 Blocks for PROFINET IO

Content of this chapter

This chapter covers the following:

- Blocks designed for use with PROFINET
- Blocks designed for use with PROFIBUS DP
- Blocks designed for use with PROFINET IO and PROFIBUS DP

Compatibility of the new blocks

New blocks were implemented for PROFINET IO since PROFINET is capable of handling larger quantity frameworks, for example. The new blocks are also used for PROFIBUS.

Comparison of the system and standard functions of PROFINET IO and PROFIBUS DP

For CPUs with integrated PROFINET interface, the table below provides an overview of the following:

- System and standard functions for SIMATIC which you will have to replace with upgraded functions for migration from PROFIBUS DP to PROFINET IO
- New system and standard functions

Table 4- 1 System and standard functions which are new or have to be replaced

Blocks	PROFINET IO	PROFIBUS DP
SFC 5 (determine start address of a module)	No (replaced with: SFC 70)	Yes
SFC 12 (deactivation and activation of DP slaves/IO devices)	Yes CPU S7-300: FW V2.4 or higher	Yes
SFC13 (reading diagnostics data from a DP slave)	No Substitution: • Event-driven: SFB 54 • Status-driven: SFB 52	Yes
SFC 49 (determine the associated slot of a logical address)	No Substitution: SFC 71	Yes
SFC 58/59 (write/read record in I/O)	No Substitution: SFB 53/52	Yes Already replaced by SFB 53/52 in DPV1
SFC 70 (determine start address of a module)	Yes	Yes
SFC 71 (determine the associated slot of a logical address)	Yes	Yes

Blocks	PROFINET IO	PROFIBUS DP
SFC 102 (read predefined parameters - CPU S7-300 only)	No Substitution: SFB 81	Yes, for S7-300
SFB 52/53 (read/ write data record)	Yes	Yes
SFB 54 (evaluate interrupt)	Yes	Yes
Receiving SFB 73 ((PROFIenergy-) data records in the intelligent device from the higher-level controller)	Yes	No
providing SFB 74 ((PROFIenergy-) data records in the intelligent device to the higher-level controller)	Yes	No
SFB 81 (read predefined parameters)	Yes	Yes
SFB 104 (assignment of the IP suite and/or device name by the user program)	Yes	No

The table below provides an overview of SIMATIC system and standard functions which must be emulated by other functions when migrating from PROFIBUS DP to PROFINET IO.

Table 4- 2 System and standard functions in PROFIBUS DP which can be emulated in PROFINET IO

Blocks	PROFINET IO	PROFIBUS DP
SFC 55 (write dynamic parameters)	No Emulate using SFB 53	Yes
SFC 56 (write predefined parameters)	No Emulate using SFB 81 and SFB 53	Yes
SFC 57 (assign module parameters)	No Emulate using SFB 81 and SFB 53	Yes

The following SIMATIC system and standard functions are not supported in PROFINET IO:

- SFC 7 (trigger hardware interrupt on DP master)
- SFC 11 (synchronize groups of DP slaves)
- SFC 72 (read data from communication peer within own S7 station)
- SFC 73 (write data to communication peer within own S7 station)
- SFC 74 (interrupt connection to a communication peer within own S7 station)
- SFC 103 (determine the bus topology in a DP master system)

Comparison of the organization blocks of PROFINET IO and PROFIBUS DP

The table below shows the changes to OB83 and OB86 in PROFINET IO compared to PROFIBUS DP.

Table 4- 3 OBs in PROFINET IO and PROFIBUS DP

Blocks	PROFINET IO	PROFIBUS DP
OB 83 (hot swapping of modules/submodules)	Also possible with S7-300, new error information	Not possible with S7-300 Slaves integrated via the GSD file report the removal/insertion of modules/submodules during operation in the form of a diagnostic interrupt and thus via OB 82. With S7 slaves, a station failure is reported and OB 86 is called when an insertion/removal interrupt is generated.
OB 83 (return-of-submodule interrupt for submodules of the transfer areas of an intelligent device)	Corresponding info about the submodules	Not relevant
OB 86 (station failure)	New error information	Unchanged
OB 86 (partial station failure/partial station recovery)	Possible if used as shared intelligent device	Not relevant

Detailed information

For detailed information about the individual blocks, refer to the *Reference Manual System Software S7-300/400 System and Standard Functions*.

4.2 Isochronous real-time communication

Synchronized communication protocol for cyclic exchange of IRT data between PROFINET devices. A reserved bandwidth is available in the send cycle for IRT IO data.

The reserved bandwidth ensures that IRT data can be transmitted at reserved, synchronized intervals, without transmission being sensitive to high network load caused by other applications (for example, TCP/IP communication, or additional real-time communication).

PROFINET with IRT can be operated with the two following options:

- IRT option "high flexibility"

  Maximum flexibility in terms of system planning and extensions.
  A topological configuration is **not** required.

- IRT option "high performance":

  A topological configuration is required.

Note

IO controller as sync master for IRT communication with IRT option "high performance"

For a configuration of IRT communication with "high performance" option, it is advisable to operate the IO controller as sync master as well. Otherwise, IO devices with IRT and RT configuration could fail as a result of sync master failure.

Additional information

For more information about the configuration of PROFINET devices, refer to the STEP 7 Online Help and to the PROFINET System Description (http://support.automation.siemens.com/WW/view/en/19292127) manual.

4.3 Prioritized startup

Prioritized startup denotes a PROFINET functionality for acceleration of the startup of IO devices (distributed I/O) in a PROFINET IO system with RT and IRT communication.

The function reduces the time that configured IO devices require in order to return to cyclic user data exchange in the following scenarios:

- On recovery of the power supply (not for a CPU that is operated as intelligent device with prioritized startup)
- On station recovery
- On activation of IO devices

Note

Startup times

The startup time depends on the number and type of modules.

Note

Prioritized startup and media redundancy

You cannot add an IO device with prioritized startup to a ring topology with media redundancy.

Additional information

For additional information, refer to the STEP 7 Online Help and to the PROFINET System Description (http://support.automation.siemens.com/WW/view/en/19292127) manual.

4.4 Device replacement without removable medium/programming device

IO devices having this function can be replaced in a simple manner:

- A removable medium (such as SIMATIC Micro Memory Card) with stored device name is not required.
- The device name does not have to be assigned with the programming device.

The replacement IO device is now assigned a device name from the IO controller. It is no longer assigned using a removable medium or programming device. The IO controller uses the configured topology and the relations determined by the IO devices. The configured target topology must match the actual topology.

Before reusing IO devices that you already had in operation, reset these to factory settings.

Additional information

For additional information, refer to the STEP 7 Online Help and to the PROFINET System Description (http://support.automation.siemens.com/WW/view/en/19292127) manual.

4.5 IO devices changing at runtime

Functionality of a PROFINET device. If the IO controller and IO devices support this functionality, other devices can assign the "changing partner ports" function to the port of an IO device by means of configuration, so that communication with each of these interchanging IO devices is possible at a specific time via this port. No other but the changing device can be physically connected to the changing port that is currently to be used for communication.

Note

The CPU ports cannot be assigned the "changing partner ports" function unless you operate the CPU as intelligent device. The function not available for CPU operation as IO controller.

Additional information

For additional information, refer to the STEP 7 Online Help and to the PROFINET System Description (http://support.automation.siemens.com/WW/view/en/19292127) manual.

4.6 Isochronous mode

The process data, transmission cycles via PROFINET IO, and the user program are synchronized in order to achieve ultimate deterministic. The input and output data of the distributed IO devices in the system is acquired and output simultaneously. The isochronous PROFINET IO cycle form the corresponding clock generator.

Note

The following components cannot be operated in isochronous mode:

- Shared devices
- Intelligent devices on the higher-level IO controller

Note

Restrictions of the send clocks for isochronous applications

The isochronous mode is possible on CPU 319-3 PN/DP starting at a send clock ≥ 500 µs and on CPU 31x PN/DP starting at 1 ms. The size of the topology and length of user data could make it necessary to increase the application cycle factor or the send clock in order to meet time requirements.

Additional information

For additional information, refer to the STEP 7 Online Help and to the PROFINET System Description (http://support.automation.siemens.com/WW/view/en/19292127) manual.

4.7 I-Device

The "I-Device" (intelligent IO device) functionality of a CPU facilitates data exchange with an IO controller and operation of the CPU, for example, as intelligent preprocessing unit of sub processes. In its role as an IO device, the I-Device is integrated accordingly into a "higher-level" IO controller.

The functionality of the intelligent device ensures that the data is pre-processed in the user program on the CPU. The process data acquired from central or distributed locations (PROFINET IO or PROFIBUS DP) is preprocessed by the user program made available to a higher-level station via
PROFINET IO device interface of the CPU.

Note

Isochronous mode

Intelligent IO devices cannot be operated in isochronous mode on higher-level IO controllers

Combination of functions

A CPU operated as intelligent IO device on a "higher-level" IO controller is, in turn, capable of operating as sublevel IO controller that controls IO devices on a subnet.

An intelligent IO device can also be operated as shared device.

Application transfer area

The IO controller and intelligent IO device communicate via the configured submodules of this transfer area. With regard to the submodules, transmission of the user data remains consistent.

Additional information

For more information about the configuration of intelligent IO devices, refer to the STEP 7 Online Help and to the PROFINET System Description (http://support.automation.siemens.com/WW/view/en/19292127) manual.

4.8 Shared Device

The "Shared Device" functionality facilitates distribution of the submodules of an IO device to different IO controllers. An intelligent IO device can also be operated as shared device.

Prerequisite for using the "Shared Device" function is that the IO controller and shared device are located on the same Ethernet subnet.

The IO controllers can be located in the same or different STEP 7 projects. If they are located in the same STEP 7 project, a consistency check is initiated automatically.

Note

Shared devices cannot be operated in isochronous mode.

Note

Note that the power modules and electronic modules belonging to the same potential group of a shared IO device (e.g. ET 200S) must be assigned to the same IO controller in order to enable the diagnosis of load voltage failure.

Additional information

For more information about shared devices and their configuration, refer to the STEP 7 Online Help and to the PROFINET System Description (http://support.automation.siemens.com/WW/view/en/19292127) manual.

4.9 Media redundancy

Function for safeguarding network and system availability. Redundant transmission links (ring topology) ensure that an alternative communication path is made available upon transmission link failure.

The Media Redundancy Protocol (MRP) is a component of PROFINET standardization to IEC 61158 and can be activated for IO devices, switches, and CPUs V3.2.1 or higher.

Configuring a ring topology

To set up a ring topology with media redundancy, you must route both free ends of a line network topology to the same device. To form a ring topology, join the line topology at two ports (ring ports) of a device that is connected to the ring. Select and specify the ring ports when configuring the relevant device.

The ring ports of the module are identified by the suffix "R" appended to the port number.

Note

IRT communication/prioritized startup

Media redundancy is not supported for operation with IRT communication or prioritized startup.

Additional information

For additional information, refer to the STEP 7 Online Help and to the PROFINET System Description (http://support.automation.siemens.com/WW/view/en/19292127) manual.

Memory concept 5

5.1 Memory areas and retentivity

5.1.1 CPU memory areas

The three memory areas of your CPU

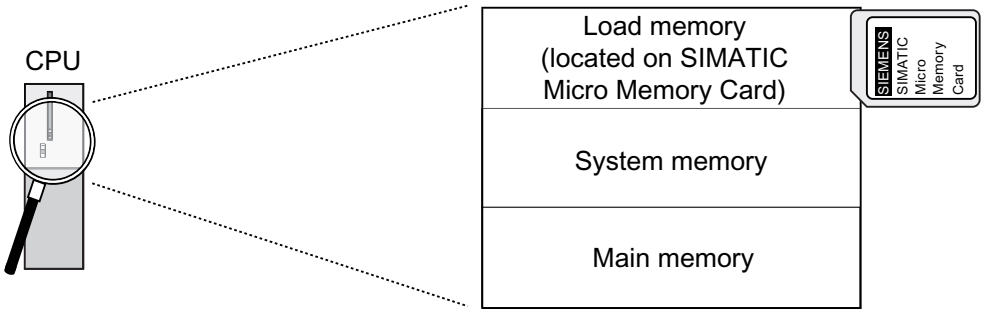

Load memory

The load memory is located on the SIMATIC Micro Memory Card. The size of the load memory corresponds exactly to the size of the SIMATIC Micro Memory Card. It is used to store code blocks, data blocks, and system data (configuration, connections, module parameters, etc.). Blocks that are identified as not relevant for execution are stored exclusively in the load memory. You can also store all the configuration data for your project on the SIMATIC Micro Memory Card.

Note

You must insert a SIMATIC Micro Memory Card into the CPU to enable loading of user programs and operation of the CPU.

System memory

The system memory is integrated in the CPU and cannot be expanded.

It contains

- the address areas for bit memories, timers, and counters
- the process images of the inputs and outputs
- local data

Main memory

The main memory is integrated in the CPU and cannot be extended. It is used to execute the code and process user program data. Programs only run in the main memory and system memory.

5.1.2 Retentivity of load memory, system memory, and main memory

Your CPU is equipped with a maintenance-free retentive memory, i.e. no back-up battery is required for its operation. Due to the retentivity, the content of the retentive memory is retained even during a POWER OFF and restart (warm restart).

Retentive data in the load memory

Your program in the load memory is always retentive: It is stored on the SIMATIC Micro Memory Card, where it is protected against power failures or memory resets

Retentive data in the system memory

In your configuration (Properties of CPU, Retentivity tab), specify which part of memory bits, timers and counters should be kept retentive and which of them are to be initialized with "0" on restart (warm restart).

The diagnostic buffer, MPI address (and baud rate), and runtime meter data are generally stored in the retentive memory area on the CPU. Retentivity of the MPI address and baud rate ensures that your CPU can continue to communicate, even after a power loss, memory reset, or loss of communication parameters (e.g. due to removal of the SIMATIC Micro Memory Card or deletion of communication parameters).

Retentive data in the main memory

The contents of retentive DBs are always retentive at restart and POWER ON/OFF. Retentive data blocks can be uploaded to the main memory in accordance with the maximum limit allowed by the main memory.

In the case of CPU versions V2.0.12 and higher, non-retentive DBs are also supported.

Non-retentive DBs are initialized from the load memory with their initial values at restart or POWER ON/OFF. Non-retentive data blocks and code blocks can be loaded in accordance with the maximum main memory limit.

The size of the retentive main memory (for retentive data blocks) of the CPU can be found in the chapters "Technical specifications of CPU 31x (Page 301)" and "Technical specifications of CPU 31xC (Page 213)".

See also

Properties of the SIMATIC Micro Memory Card (Page 158)

5.1.3 Retentivity of memory objects

Retentive behavior of the memory objects

The table below shows the retentive behavior of memory objects during specific operating state transitions.

Table 5- 1 Retentive behavior of the memory objects

Memory object	Operating state transition		
	POWER OFF / POWER ON	STOP → RUN	Memory reset
User program/data (load memory)	X	X	X
• Retentive behavior of DBs on CPUs with firmware < V2.0.12	X	X	–
• Retentive behavior of DBs on CPUs with firmware ≥ V2.0.12	Can be set in the properties of the DBs in STEP 7 V5.2 + SP1 or higher.		–
Bit memories, timers, and counters configured as retentive objects	X	X	–
Diagnostic buffer, runtime meter	X [1]	X	X
MPI address, baud rate of an MPI interface DP address, baud rate of an MPI/DP interface, if set as DP note in the parameter Note: After POWER OFF/ON and CPU memory reset, the parameters of a pure DP interface are not retained unless the parameter assignment (SDBs) was loaded	X	X	X
• IP suite/device name of the PROFINET interface	Depends on the type of assignment of the IP address parameters and of the device name	X	Depends on the type of assignment of the IP address parameters and of the device name
x = retentive; – = not retentive			

[1] Only the last 100 entries in the diagnostics buffer are retained after POWER OFF / POWER ON.

Reference

For more information about the assignment of IP address parameters and device names, refer to the S7-300 - Installation Operating Instructions, chapter: IP address parameters and device name.

Retentive behavior of a DB for CPUs with firmware < V2.0.12

For these CPUs, the contents of the DBs are always retentive at POWER ON/OFF or STOP-RUN.

Retentive behavior of a DB for CPUs with firmware ≥ V2.0.12

These CPUs support the generation of data blocks with "NON-Retain" (not retentive) property.

Data blocks assigned the "NON-Retain" property are reset to their initial values after every POWER OFF/ON and every STOP-RUN transition of the CPU.

You have two options of assigning the "NON-Retain" property to a data block:

- STEP 7 (V5.2 + SP1 or higher): Activate the NON-Retain function in the DB properties
- SFC 82 " Crea_DBL" (generation of a DB in load memory): ATTRIB parameter, set bit 2 to "1"

Table 5- 2 Retentive behavior of DBs for CPUs with firmware ≥ V2.0.12

At POWER ON/OFF or restart of the CPU, the DB should	
be reset to the initial values (non-retentive DB)	**retain the actual values (retentive DB)**
Reason: At POWER ON/OFF and restart (STOP-RUN) of the CPU, the actual values of the DB are non-retentive. The DB receives the initial values from the load memory.	Reason: At POWER OFF/ON and restart (STOP-RUN) of the CPU, the actual values of the DB are retained.
Requirement in STEP 7: • The "Non-Retain" checkbox is **activated** in the DB properties. or • A **non-retentive** DB was generated using SFC 82 "CREA_DBL" and the associated block attribute (ATTRIB → Bit NON_RETAIN).	Requirement in STEP 7: • The "Non-Retain" checkbox is **deactivated** in the DB properties. or • a **retentive** DB was generated using SFC 82 "CREA_DBL".

The size of the retentive main memory (for retentive data blocks) of the CPU can be found in the chapters "Technical specifications of CPU 31x (Page 301)" and "Technical specifications of CPU 31xC (Page 213)".

5.1.4 Address areas of the system memory

The system memory of the S7-CPUs is divided into address areas. By using corresponding instructions in your program, you can address the data directly in the relevant address area.

Address areas of the system memory

Table 5- 3 Address areas of the system memory

Address areas	Description
Process input image	At every start of an OB 1 cycle, the CPU reads the input values from the input modules and saves them in the process input image.
Process output image	During the cycle, the program calculates the values for the outputs and stores them in the process output image. At the end of the OB 1 cycle, the CPU writes the calculated output values to the output modules.
Bit memory	This area provides memory for saving the intermediate results of a program calculation.
Timers	Timers are available in this area.
Counters	Counters are available in this area.
Local data	Temporary data of a code block (OB, FB, FC) is saved to this memory area while the block is being processed.
Data blocks	See *Recipes and measured value archives*

Reference

To find out which address areas are possible for your CPU, refer to the *S7-300 instruction lists* and the chapters Technical specifications of the CPU 31x (Page 301) and Technical specifications of the CPU 31xC (Page 213).

Process input/output image

When the input (I) and output (O) address areas are addressed in the user program, the signal states of digital signal modules are not queried. Instead, a memory area in the CPU system memory is accessed. This memory area is the process image.

The process image has two sections: the process image of inputs, and the process image of outputs.

Advantages of the process image

Access to the process image, compared to direct access to the input/output modules, offers the advantage that a consistent image of process signals is made available to the CPU during cyclic program processing. If the signal state at an input module changes during program execution, the signal status in the process image is maintained until the process image is updated in the next cycle. Moreover, since the process image is stored in the CPU's system memory, access to the process image is significantly faster than direct access to the signal modules.

Process image update

The operating system updates the process image periodically. The figure below shows the sequence of this operation within a cycle.

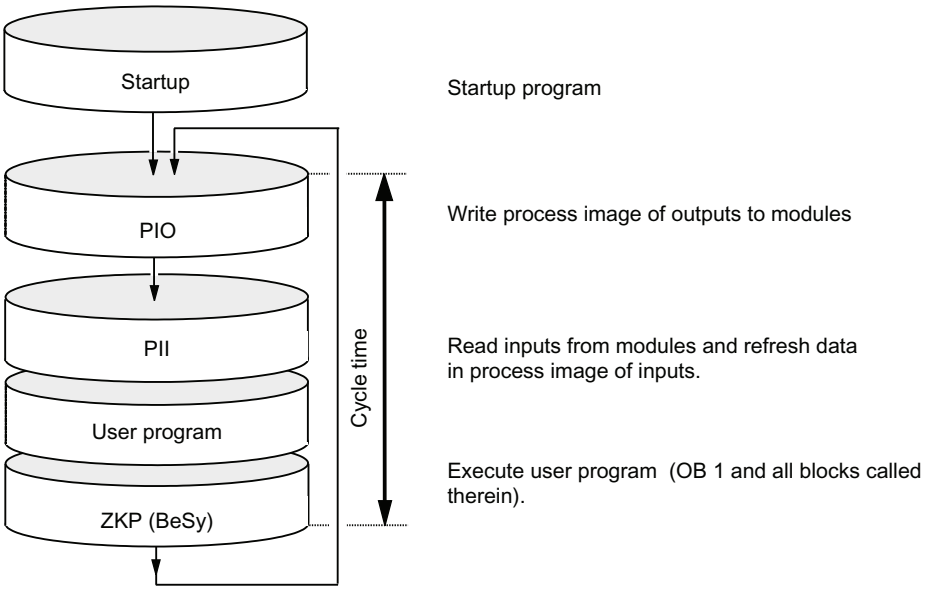

Configurable process image of the CPUs

STEP 7 lets you define a user-specific size of the process image of the inputs/outputs for the following CPUs.

CPU	Firmware
CPU 312	V3.0 or higher
CPU 312C	V3.3 or higher
CPU 313C	V3.3 or higher
CPU 313C-2 DP	V3.3 or higher
CPU 313C-2 PtP	V3.3 or higher
CPU 314	V3.0 or higher
CPU 314C-2 DP	V3.3 or higher
CPU 314C-2 PtP	V3.3 or higher
CPU 314C-2 PN/DP	V3.3 or higher
CPU 315-2 DP	V3.0 or higher
CPU 315-2 PN/DP	V2.5 or higher
CPU 317-2 DP	V2.5 or higher
CPU 317-2 PN/DP	V2.3 or higher
CPU 319-3 PN/DP	V2.4 or higher

For information on the size of the process image of your CPU please refer to the technical specifications.

Please observe the following::

Note

Currently, the variable setting of the process image only affects its update at the cycle control point. This means that the process input image is updated up to the set PII size with the corresponding values of the input modules existing within this address area, or the values of the process output image up to the set POI limit are written to the output modules existing within this address area.

This set size of the process image is ignored with respect to STEP 7 commands used to access the process image (e.g.
A I100.0, L IW200, = Q20.0, T QD150, or also corresponding indirect addressing commands).

These commands output up to the maximum size of the process image, however they do not output any synchronous access errors (see technical specifications for size). Instead, they only access the permanently existing internal memory area of the process image. The same applies for the use of actual parameters of block call commands from the I/O area (area of the process image).

Particularly if these process image limits were changed, you should check to which extent your user program continues to access the process image in the area between the set and the maximum process image size. If access to this area continues, this may mean that changing inputs at the I/O module are no longer detected in the user program or that outputs actually are not written to the output module and no alarm is generated.
You should also note that certain CPs may only be addressed outside of the process image.

Local data

Local data store the following:

- The temporary variables of code blocks
- The start information of the organization blocks
- Transfer parameters
- Intermediate results

Temporary variables

When you create blocks, you can declare temporary variables (TEMP) which are only available during processing of the block and are then overwritten. These local data have a fixed length in each OB. Local data must be initialized prior to the first read access. Furthermore, each organization block requires 20 bytes of local data for its start information.

The CPU is equipped with a memory for storing temporary variables (local data) of blocks which are being processed. The size of this memory area depends on the CPU. It is distributed among the priority classes in partitions of equal size. Each priority class has its own local data area.

CAUTION

All temporary variables (TEMP) of an OB and its subordinate blocks are stored in local data. If you use complex nesting levels for block processing, this may cause an overflow of the local data area.
The CPUs will change to STOP mode if you exceed the permissible size of local data for a priority class.
Make allowances for local data required for synchronous error OBs. This is assigned to the respective triggering priority class.

See also

Retentivity of load memory, system memory, and main memory (Page 150)

5.1.5 Properties of the SIMATIC Micro Memory Card

The SIMATIC Micro Memory Card as memory module for the CPU

The memory module used on your CPU is a SIMATIC Micro Memory Card. You can use MMCs as load memory or as portable data carrier.

Note

The SIMATIC Micro Memory Card must be inserted in the CPU to permit operation.

What is stored on the SIMATIC Micro Memory Card?

The following data can be stored on the SIMATIC Micro Memory Card:

- User program, i.e. all blocks (OBs, FCs, FCs, DBs) and system data
- Archives and recipes
- Configuration data (STEP 7 projects)
- Data for operating system update and backup

Note

You can either store user and configuration data or the operating system on the SIMATIC Micro Memory Card.

Properties of a SIMATIC Micro Memory Card

The SIMATIC Micro Memory Card ensures maintenance-free operation and retentivity for these CPUs.

CAUTION

Data on a SIMATIC Micro Memory Card can be corrupted if you remove the card while it is being accessed for writing. In this case, you may have to delete the SIMATIC Micro Memory Card on your PG, or format the card in the CPU. Never remove a SIMATIC Micro Memory Card in RUN mode. Always remove it when power is off, or when the CPU is in STOP state, and when the PG is not writing to the card. When the CPU is in STOP mode and you cannot not determine whether or not a PG is writing to the card (e.g. load/delete block), disconnect the communication lines.

SIMATIC Micro Memory Card copy protection

Your SIMATIC Micro Memory Card has an internal serial number that implements an MMC copy protection on the user level. You can read this serial number from the SSL partial list $011C_H$ index 8 using SFC 51 RDSYSST. Program a STOP command in a know-how-protected block, for example, if the reference and actual serial number of your SIMATIC Micro Memory Card are not the same

Service life of a SIMATIC Micro Memory Card

The service life of a SIMATIC Micro Memory Card depends mainly on the following factors:

1. The number of delete or programming operations
2. External influences such as ambient temperature

At ambient temperatures up to 60 °C, a maximum of 100,000 delete/write operations can be performed on a SIMATIC Micro Memory Card.

⚠ CAUTION
To prevent loss of data, do not exceed the maximum number of delete/write operations.

Reference

Additional information:

- on the *SSL partial list* can be found in the *CPU 31xC and CPU 31x instruction list*, or in the Reference Manual *System Software S7-300/400 System and Standard Functions*
- on resetting the CPU can be found in the *Operating Instructions CPU 31xC and CPU31x, Commissioning, Commissioning Modules, CPU Memory Reset by means of Mode Selector*

See also

Operator controls and indicators: CPU 313C-2 DP (Page 30)
Operator controls and indicators: CPU 312 and CPU 314 (Page 45)
Operator controls and indicators: CPU 315-2 DP and CPU 317-2 DP (Page 47)
Operator controls and indicators: CPU 315-2 PN/DP and CPU 317-2 PN/DP (Page 50)
Operator controls and indicators: CPU 319-3 PN/DP (Page 52)

5.2 Memory functions

5.2.1 General: Memory functions

Memory functions

Memory functions are used to generate, modify or delete entire user programs or specific blocks. You can also ensure that your project data is retained by archiving it. If you created a new user program, use a PG/PC to download the complete program to the SIMATIC Micro Memory Card

5.2.2 Download of the user program to the SIMATIC Micro Memory Card in the CPU

Load user program

The entire user program is downloaded by means of the PG/PC to the CPU via the SIMATIC Micro Memory Card. The previous content of the Micro Memory Card is deleted in the process. Blocks use the load memory area as specified under "Load memory requirements" in "General block properties".

The figure shows the load and main memory of the CPU:

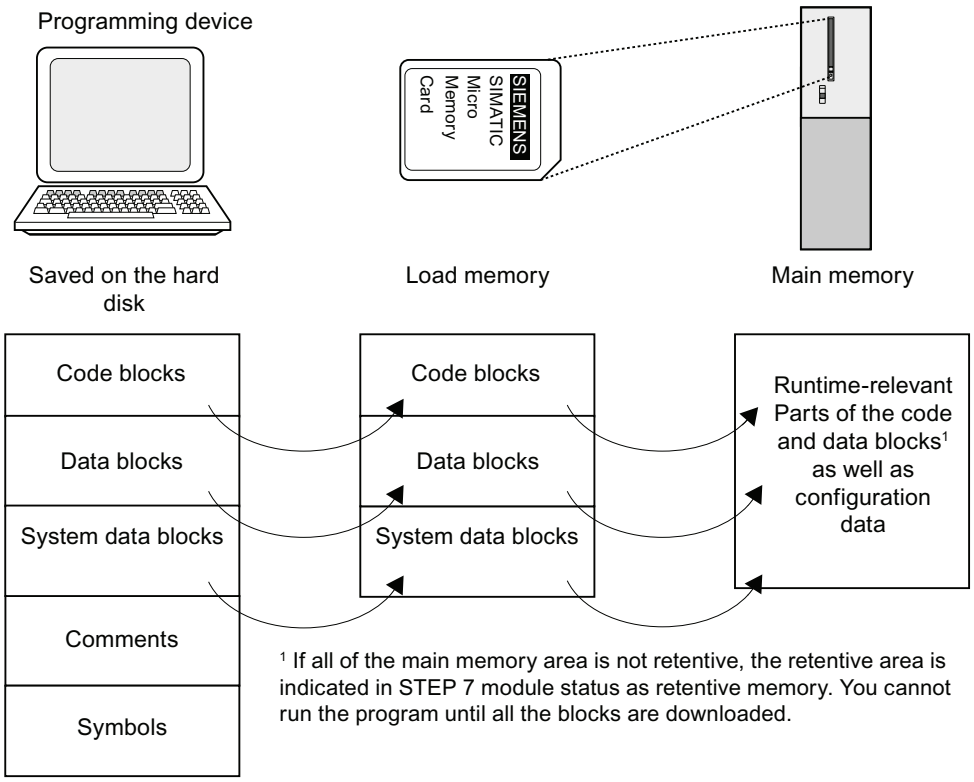

Note

This function is only permitted when the CPU is in STOP mode. The load memory is empty if the load operation could not be completed due to power loss or impermissible blocks.

5.2.3 Handling with blocks

5.2.3.1 Encryption of blocks

Important notes

Note

Supported blocks

S7-Block Privacy can only be used to encrypt function blocks (FBs) and functions (FCs).

Once encrypted, the blocks can no longer be edited or monitored in STEP 7. The encryption also prevents execution of all test and commissioning functions, e.g. block status, or breakpoints.

Requirements

You can download encrypted blocks to the following CPUs: CPU31x V3.2.1 or higher

The "S7-Block Privacy" add-on packages supplied with STEP 7 must be installed. This is the only tool that you can use for strong encryption of the blocks.

General procedure

To encrypt the blocks, proceed as follows:

1. In STEP 7, right-click the block container and select "Block Privacy ...".
2. The S7BLP tool is launched.
3. Select the block (multiple selection is possible).
4. Right-click the block to be encoded and select "Encrypt Block...". The "Encrypt Block" dialog opens.
5. Select whether to include decompilation data in the encryption.

   Note

   All attempts to decompile the block will fail if you deactivate the check box!

6. Enter a key string with a length of at least 12 characters in both fields. Make sure you keep the key in a safe place. Click "OK" to launch the encryption.

Result: The block is encrypted. The following icons identify this status:

- Decompilable encrypted block
- Encrypted block that cannot be decompiled

Note

Command execution time

Usually, the command execution time is prolonged because encrypted blocks cannot be processed in fully optimized state. The final cycle time can only be determined with encrypted blocks.

Note

Prolonged runtimes during POWER ON/CPU memory reset/download

The CPU startup time, the time required for CPU memory reset, and the block download time can be prolonged significantly.

Additional information

For more information, refer to the STEP 7 Online Help, "S7-Block Privacy" section.

5.2.3.2 Reloading or transferring blocks

There are two ways to reload or overwrite user blocks:

- Reloading blocks: You have already created a user program and downloaded it to the SIMATIC Micro Memory Card in the CPU. You then want to add new blocks to the user program. In this case you do not need to download the entire user program to the SIMATIC Micro Memory Card again. Instead you only need to download the new blocks to the SIMATIC Micro Memory Card (this reduces the download times for highly complex programs).
- Overwrite: In this case, you make changes to blocks of your user program. In the next step you then overwrite the user program or only the changed blocks to the SIMATIC Micro Memory Card using the PG/PC.

⚠ WARNING
When transferring blocks/a user program, all data stored under the same name on the SIMATIC Micro Memory Card is overwritten.

After loading runtime-relevant blocks, their content is transferred to the main memory and activated.

5.2.3.3 Uploading blocks

Uploading blocks

Unlike download operations, an upload operation is the transfer of specific blocks or a complete user program from the CPU to the PG/PC. The block content is here identical with that of the last download to the CPU. Runtime-relevant DBs are an exception, because their actual values are transferred. An upload of blocks or of the user program from the CPU in STEP 7 does not influence the assignment of CPU memory space.

5.2.3.4 Deleting blocks

Deleting blocks

When you delete a block, it is deleted from the load memory. In STEP 7, you can also delete blocks in the user program (DBs also with SFC 23 "DEL_DB"). Main memory used by this block is released.

5.2.3.5 Compressing blocks

Compressing blocks

When blocks are compressed, gaps between memory objects in the load memory/main memory as a result of load/delete operations are eliminated. The free memory space is made available as one block. Compressing is possible when the CPU is in RUN or in STOP mode.

5.2.3.6 Promming (RAM to ROM)

Promming (RAM to ROM)

Promming means that the actual values of the data blocks are transferred from the main memory to the load memory as new initial values of the DBs.

Note

This function is only permitted when the CPU is in STOP mode. The load memory will be empty if the function cannot be completed due to a power failure.

5.2.4 Memory reset and restart

Memory reset

After the insertion/removal of a Micro Memory Card, a memory reset restores defined conditions to permit a CPU restart (warm restart). A memory reset restructures the CPU's memory management. All blocks in the load memory are retained. All runtime-relevant blocks are transferred once again from the load memory to the main memory, in particular to initialize the data blocks in the main memory (restore initial values).

Restart (warm restart)

- All retentive DBs retain their actual value (non-retentive DBs are also supported by CPUs with firmware ≥ V2.0.12. Non-retentive DBs receive their initial values).
- The values of all retentive M, C, T are retained.
- All non-retentive user data is initialized:
  - M, C, T, I, O with "0"
- All execution levels are initialized.
- The process images are deleted.

Reference

Also refer to *Memory reset using the CPU's mode selector* in the section *Commissioning* in the *CPU 31xC and CPU 31x Operating Instructions*.

5.2.5 Recipes

Introduction

A recipe represents a collection of user data. You can implement a simple recipe concept using non-runtime-relevant DBs. In this case, the recipes should have the same structure (length). One DB should exist per recipe.

Processing sequence

Recipe is to be stored in the load memory:

- The various data records of recipes are created as non-runtime-relevant DBs in STEP 7 and then downloaded to the CPU. Therefore, recipes only occupy load memory space and no main memory space.

Working with recipe data:

- With SFC83 "READ_DBL", the user programs reads the data record of the current recipe from the DB in the load memory to a runtime-relevant DB in the main memory. As a result, the main memory only has to accommodate the data of one record. The user program can now access data of the current recipe. The figure below shows how to handle recipe data:

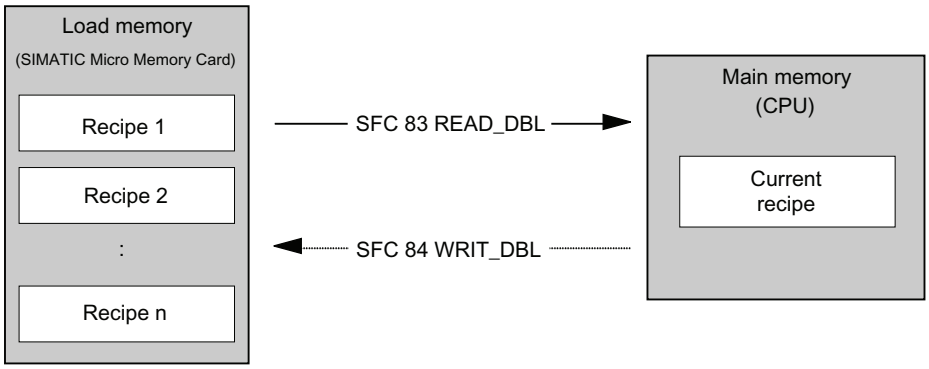

Saving a modified recipe:

- With SFC 84 "WRIT_DBL", the user program can write new or modified recipe data records generated during program execution to the load memory. This data written to the load memory is portable and is retained in case of a memory reset. You can backup modified data records (recipes) on the PG/PC by uploading and saving them as a single block.

Note

The active system functions SFC 82 to 84 (active access to the SIMATIC Micro Memory Card) have a strong influence on PG functions (e.g. block status, variable status, load, upload, open block). This typically reduces performance (compared to passive system functions) by the factor 10.

Note

To prevent loss of data, do not exceed the maximum number of delete/write operations. Also refer to the SIMATIC Micro Memory Card (MMC) section in the "Structure and Connections of a CPU" chapter.

CAUTION

Data on a SIMATIC Micro Memory Card can be corrupted if you remove the card while it is being accessed for writing. In this case, you may have to delete the SIMATIC Micro Memory Card on your PG, or format the card in the CPU. Never remove a SIMATIC Micro Memory Card in RUN mode. Always remove it when power is off, or when the CPU is in STOP state, and when the PG is not writing to the card. When the CPU is in STOP mode and you cannot not determine whether or not a PG is writing to the card (e.g. load/delete block), disconnect the communication lines.

5.2.6 Measured value log files

Introduction

Measured values are generated when the CPU executes the user program. These values are to be logged and analyzed.

Processing sequence

Acquisition of measured values:

- The CPU writes all measured values to a DB (for alternating backup mode in several DBs) which is located in main memory.

Measured value logging:

- Before the data volume can exceed the main memory capacity, you can call SFC 84 "WRIT_DBL" in the user program to swap measured values from the DB to load memory. The figure below shows how to handle measured value log files:

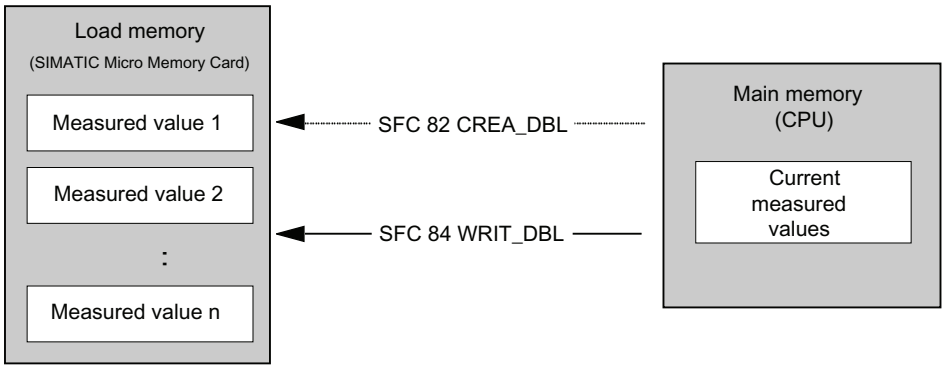

- You can call SFC 82 "CREA_DBL" in the user program to generate new (additional) non-runtime-relevant DBs in load memory which do not require main memory space.

Reference

For detailed information on SFC 82, refer to the *System Software for S7-300/400, System and Standard Functions* Reference Manual, or directly to the STEP 7 Online Help.

Note

SFC 82 is terminated and an error message is generated if a DB already exists under the same number in load memory and/or main memory.

This data written to the load memory is portable and is retained in case of a memory reset.

Evaluation of measured values:

- Measured value DBs saved to the load memory can be uploaded and evaluated by other communication peers (e.g. PG, PC, etc.).

Note

The active system functions SFC 82 to 84 (active access to the SIMATIC Micro Memory Card) have a strong influence on PG functions (e.g. block status, variable status, load, upload, open block). This typically reduces performance (compared to passive system functions) by the factor 10.

Note

For CPUs with firmware V2.0.12 or higher, you can also generate non-retentive DBs using SFC 82 (parameter ATTRIB → NON_RETAIN bit.)

Note

To prevent loss of data, do not exceed the maximum number of delete/write operations. For additional information, refer to the technical specifications of the SIMATIC Micro Memory Card in the "General Technical Specifications" of your CPU.

⚠ CAUTION

Data on a SIMATIC Micro Memory Card can be corrupted if you remove the card while it is being accessed for writing. In this case, you may have to delete the SIMATIC Micro Memory Card on your PG, or format the card in the CPU. Never remove a SIMATIC Micro Memory Card in RUN mode. Always remove it when power is off, or when the CPU is in STOP state, and when the PG is not writing to the card. When the CPU is in STOP mode and you cannot not determine whether or not a PG is writing to the card (e.g. load/delete block), disconnect the communication lines.

5.2.7 Backup of project data to SIMATIC Micro Memory Card

Functional principles

Using the **Save project to Memory Card** and **Fetch project from Memory Card** functions, you can save all project data to a SIMATIC Micro Memory Card, and retrieve these at a later time. For this operation, the SIMATIC Micro Memory Card can be located in a CPU or in the MMC programming unit of a PG or PC.

Project data is compressed before it is saved to a SIMATIC Micro Memory Card, and uncompressed on retrieval.

Note

In addition to project data, you may also have to store your user data on the MMC. You should therefore select a SIMATIC Micro Memory Card with sufficient memory space.

A message warns you of insufficient memory capacity on your SIMATIC Micro Memory Card.

The volume of project data to be saved corresponds with the size of the project's archive file.

Note

For technical reasons, you can only transfer the entire contents (user program and project data) using the **Save project to memory card** function.

Cycle and response times

6

6.1 Overview

Overview

This section contains detailed information about the following topics:

- Cycle time
- Response time
- Interrupt response time
- Sample calculations

Reference: Cycle time

You can read out the cycle time of your user program using the PG. For additional information, refer to the *STEP 7 Online Help* or to the *Configuring Hardware and Connections in STEP 7* manual and in the *Programming with STEP 7* manual.

Reference: Execution time

Can be found in the *S7-300 Instruction List for S7-300 CPUs and IMs with integrated CPU*. This tabular list contains the execution times for all:

- STEP 7 instructions that the relevant CPU can execute
- The SFCs/SFBs integrated in the CPUs
- The IEC functions which can be called in STEP 7.

6.2 Cycle time

6.2.1 Overview: Cycle time

Introduction

This section explains what we mean by the term "cycle time", what it consists of, and how you can calculate it.

Definition of cycle time

The cycle time represents the time that an operating system needs to execute a program, that is, one OB 1 cycle, including all program sections and system activities interrupting this cycle.

This time is monitored.

Time slice model

Cyclic program processing, and therefore also user program processing, is based on time slices. To clarify these processes, let us assume that every time slice has a length of precisely 1 ms.

Process image

During cyclic program processing, the CPU requires a consistent image of the process signals. To ensure this, the process signals are read/written prior to program execution. Subsequently, during program processing the CPU does not access the signal modules directly when addressing the input (I) and output (O) address areas, but rather it accesses the CPU's system memory area containing the I/O process image.

Sequence of cyclic program processing

The table and figure below show the phases in cyclic program processing.

Table 6- 1 Cyclic program processing

Phase	Sequence
1	The operating system initiates cycle time monitoring.
2	The CPU copies the values from the process output images to the output modules.
3	The CPU reads the status of the inputs at the input modules and updates the process input image.
4	The CPU processes the user program in time slices and executes the instructions specified in the program.
5	At the end of a cycle, the operating system executes pending tasks, e.g. loading and deleting of blocks.
6	The CPU then returns to the start of the cycle, and restarts cycle time monitoring.

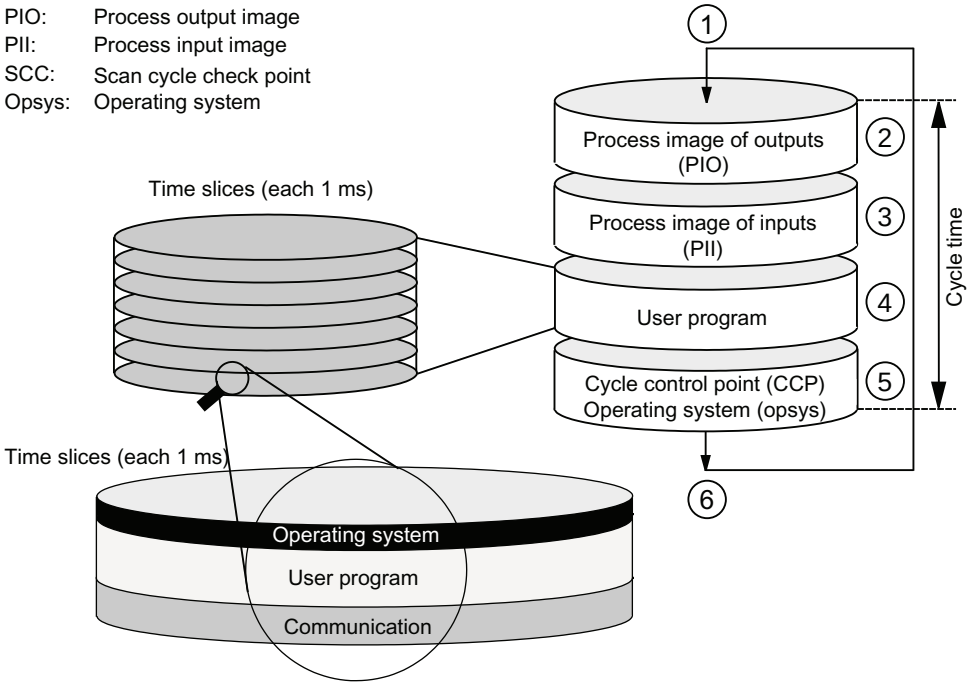

With the S7-300 CPUs, the data are accessed with an OP/TP (operator control and monitoring functions) exclusively at the cycle control point (for data consistency, see Technical Specifications). Program execution is not interrupted by the operator control and monitoring functions.

6.2.2 Calculating the cycle time

Introduction

The cycle time is derived from the sum of the following influencing factors.

Extending the cycle time

Always make allowances for the extension of the cycle time of a user program due to:

- Time-based interrupt processing
- Hardware interrupt processing
- Diagnostics and error processing
- Processing of synchronous cycle interrupts
- Communication with programming devices (PGs), Operator Panels (OPs), and via connected CPs (e.g. Ethernet, PROFIBUS DP)
- Test and startup functions such as status/controlling of variables or block status.
- Transfer and deletion of blocks, compressing of the user program memory
- Write/read access to the Micro Memory Card from the user program using SFC 82 to SFC 84
- S7 communication via integrated PROFINET interface
- PROFINET CBA communication via the PROFINET interface (system load, SFC call, updating at the cycle control point)
- PROFINET IO communication via the PROFINET interface (system load)
- Activating "prioritized OCM communication" in the properties dialog of the CPU

Influencing factors

The table below shows the factors influencing the cycle time.

Table 6- 2 Factors influencing cycle time

Factors	Comment
Transfer time for the process image output (PIQ) and the process image of the inputs (PII)	... See table "Data for calculating the typical transfer time for the process image"
User program execution time	... Is calculated from the execution times of the different instructions, see *S7-300 instruction list*
Operating system execution time at cycle control point	... See table "Typical operating system execution times at the cycle control point"
Extension of cycle time due to communication load	... You configure the maximum permitted communication load on the cycle as a percentage in STEP 7, see the *Programming with STEP 7.* manual.
Load on cycle times due to interrupts	Interrupt requests can always stop user program execution. See table "Typical extended cycle time due to nested interrupts".

Process image update

The table below shows the time a CPU requires to update the process image (process image transfer time). The times specified might be prolonged as a result of interrupts or CPU communication. The transfer time for the process image update is calculated as follows:

Table 6- 3 Formula for calculating the typical transfer time for the process image (PI):

Base load (value from line K)	+ Number of bytes in PI in module rack 0 x (value from line A) + number of bytes in PI in module racks 1 to 3 x (value from line B) + Number of words in PI via DP x (value from line D) + Number of words in PI via PROFINET x (value from line P) **= Transfer time for the process image**

Table 6- 4 CPU 31xC: Data for calculating the process image (PI) transfer time

Const.	Components	CPU						
		312C	313C	313C-2 DP	313C-2 PtP	314C-2 PtP	314C-2 DP	314C-2 PN/DP
K	Base load	170 µs	150 µs	150 µs		150 µs		
A	Per byte in rack 0	35 µs		35 µs		35 µs		
B	Per byte in racks 1 to 3	-	35 µs*	35 µs*		35 µs*		
D (DP only)	Per word in the DP area for the integrated DP interface	--		0.5 µs	-	-	0.5 µs	
P (PN only)	Per word in the PROFINET area for the integrated PROFINET interface	-		-		-		0.5 µs

* +40 µs je per rack

Table 6- 5 CPU 31x: Data for calculating the process image (PI) transfer time

Const.	Components	CPU				
		312	314	315	317	319
K	Base load	150 µs	120 µs	100 µs	70 µs	40 µs
A	Per byte in rack 0	20 µs			15 µs	
B	Per byte in racks 1 to 3	-	30 µs*		25 µs*	22 µs*
D (DP only)	Per word in the DP area for the integrated DP interface	-		0.5 µs		
P (PROFINET only)	Per word in the PROFINET area for the integrated PROFINET interface	-		0.5 µs		

* +40 µs je per rack

Extending the user program processing time

In addition to actually working through the user program, your CPU's operating system also runs a number of processes in parallel, such as timer management for the core operating system. These processes extend the processing time of the user program by up to 10 %.

Operating system processing time at the cycle control point

The table below shows the operating system processing times at the cycle control point of the CPUs. These times apply without:

- Testing and commissioning routines, e.g. status/controlling of variables or block status functions
- Transfer and deletion of blocks, compressing user program memory
- Communication
- Writing, reading of the SIMATIC Micro Memory Card with SFC 82 to 84

Table 6- 6 Typical operating system processing time at the cycle control point (CCP)

CPU	Cycle control in the cycle control point
312, 312C	250 µs
313C, 313C-2	180 µs
314, 314C-2, 314C-2 PN/DP	150 µs
315	140 µs
317	120 µs
319	90 µs

Extension of the cycle time as a result of nested interrupts

Enabled interrupts also extend cycle time. Details are found in the table below.

Table 6- 7 Typical extended cycle time due to nested interrupts

	Interrupt type				
CPU	Hardware interrupt	Diagnostic interrupt	Time-of-day interrupt	Time-delay interrupt	Cyclic interrupt
312C	300 µs	300 µs	400 µs	250 µs	250 µs
313C	250 µs	250 µs	300 µs	220 µs	200 µs
313C-2	250 µs	250 µs	300 µs	220 µs	200 µs
314C-2	250 µs	250 µs	300 µs	200 µs	170 µs
312	300 µs	300 µs	400 µs	200 µs	200 µs
314	250 µs	250 µs	300 µs	170 µs	150 µs
315	200 µs	200 µs	200 µs	150 µs	140 µs
317	160 µs	180 µs	150 µs	80 µs	80 µs
319	120 µs	100 µs	100 µs	50 µs	40 µs

The program runtime at interrupt level must be added to this time extension.

The corresponding times are added together if the program contains nested interrupts.

Extension of the cycle time due to errors

Table 6- 8 Typical cycle time extension as a result of errors

CPU	Type of error: Programming error / I/O access error
312C	220 µs
313C	180 µs
313C-2	180 µs
314C-2	150 µs
312	220 µs
314	150 µs
315	100 µs
317	60 µs
319	20 µs

You have to add the program execution time of the interrupt OB to this increase. The times required for multiple nested interrupt/error organization blocks are added accordingly.

6.2.3 Different cycle times

Overview

The cycle time (T_{cyc}) length is not the same in every cycle. The figure below shows different cycle times T_{cyc1} and T_{cyc2}. The cycle time T_{cyc2} is longer than T_{cyc1}, because the cyclically executed OB 1 is interrupted by a time-of-day interrupt OB (here: OB 10).

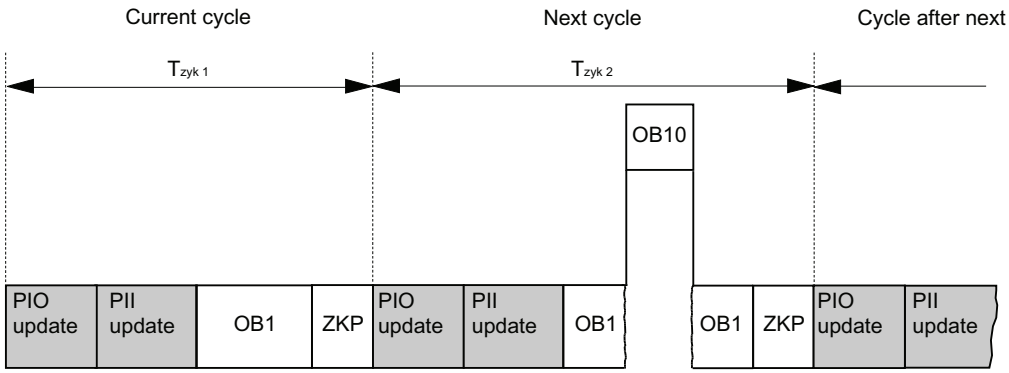

Block processing times may fluctuate

The execution times of blocks (e.g. OB 1) can vary for different reasons. They vary because of:

- Conditional instructions
- Conditional block calls
- Different program paths
- Loops, etc.

These influences lead to cycle times that differ in length.

Scan cycle monitoring time

The time is monitored for program execution in OB 1. This monitoring is performed using the so-called scan cycle monitoring time. By default, the monitoring time in STEP 7 is preset to 150 ms. You can use the CPU's parameter settings to modify this value in a range from 1 ms to 6 s.

If the processing of the main program exceeds the set scan cycle monitoring time, the CPU calls the OB 80 (error interrupt). If OB 80 is not available, the CPU changes to STOP mode.

The scan cycle monitoring time includes the entire processing time of OB 1. This time also includes the processing times for higher priority classes, that interrupt the main program (in the current cycle). Communications processes by the operating system also extend the runtime of the main program.

6.2.4 Communication load

Configured communication load for PG/OP communication, S7 communication and PROFINET CBA

The CPU operating system continuously provides a specified percentage of total CPU processing performance (time slice technology) for communication tasks. Processing performance not required for communication is made available to other processes.

In the hardware configuration you can specify a communication load value between 5% and 50%. The default value is 20%.

Maximum load generated by communication functions increases by approx. 10% (e.g. from 50% to 60%) if "prioritized OCM communication" is activated.

Cycle time prolongation depends on the load caused by communication processes and can fluctuate.

To calculate the factor that determines maximum extension of the cycle time, you can use the following formula:

- Prioritized OCM communication disabled:

  100 / (100 – configured communication load in %)

- Prioritized OCM communication enabled:

  100 / (100 – (configured communication load in % + 10%))

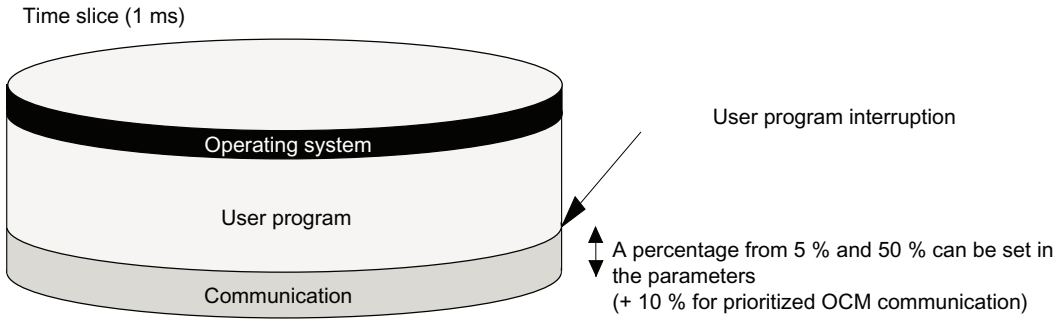

Example: 20% communication load

In your hardware configuration, you have specified a communication load of 20%. The calculated cycle time is 10 ms. Using the above formula, the cycle time is extended by the factor 1.25.

Example: 50% communication load

In your hardware configuration, you have specified a communication load of 50%. The calculated cycle time is 10 ms. Using the above formula, the cycle time is extended by the factor 2.

Dependency of actual cycle time on the communication load

The figure below describes the non-linear dependency of the actual cycle time on the communication load. In our example we have chosen a cycle time of 10 ms.

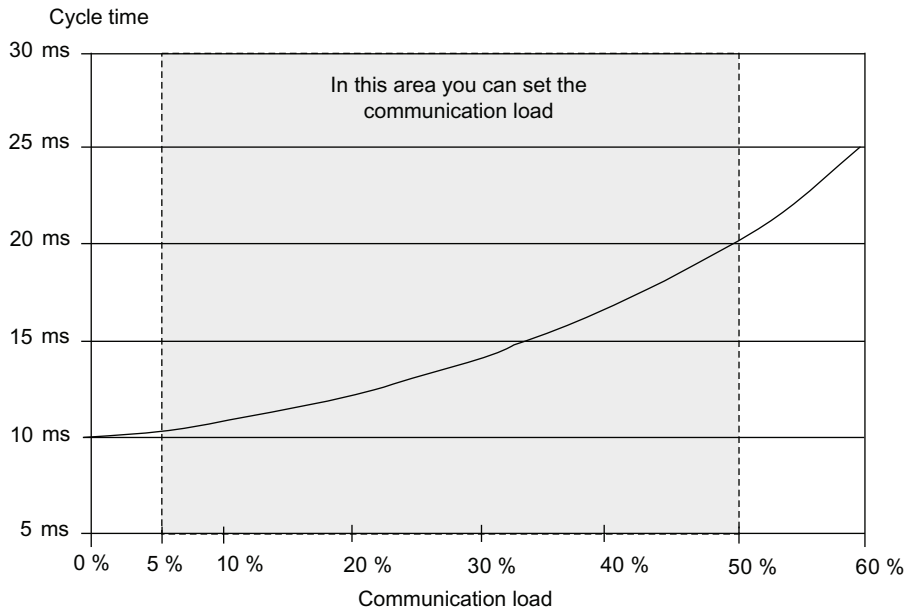

Influence on the actual cycle time

From the statistical viewpoint, asynchronous events such as interrupts occur more frequently within the OB 1 cycle when the cycle time is extended as a result of communication load. This further extends the OB 1 cycle. This extension depends on the number of events that occur per OB 1 cycle and the time required to process these events.

Note

Change the value of the "communication load" parameter to check runtime effects on the cycle time.

You must consider the communication load when setting the maximum cycle time, otherwise time errors may occur.

Tips

- Use the default setting whenever possible.
- Increase this value only if the CPU is used primarily for communication and if the user program is not time critical.
- In all other situations you should only reduce this value.

6.2.5 Cycle time extension as a result of test and commissioning functions

Runtimes

The runtimes of the testing and commissioning functions are operating system runtimes, so they are the same for every CPU. How the cycle time is extended as a result of active testing and commissioning functions is shown in the table below.

Table 6- 9 Cycle time extension as a result of test and commissioning functions

Function	CPU 31x and CPU 31xC
Status variable	Negligible
Control variable	Negligible
Status block	Typ. 3 µs for each monitored line +3 x runtime of monitored block *
* The monitoring of larger blocks and the monitoring of loops can lead to a significant increase in the cycle time.	

Setting process and test mode through parameter assignment (for CPUs < V2.8)

For **process mode**, the maximum permissible cycle load due to communication is not only specified in "Cycle load due to communication". It must also be set via "Process mode ⇒ Maximum permitted increase of cycle time as a result of test functions". Thus, the parameterized time is monitored absolutely in process mode, and data acquisition is stopped if a timeout occurs. This is how STEP 7 stops data requests in loops before a loop ends, for example. When running in **test mode**, the complete loop is executed in every cycle. This can significantly increase cycle time.

Setting process and test mode in the LAD/FBD/STL editor (for CPUs ≥ V2.8)

With the CPUs ≥ V2.8, switching between process and test mode is carried out directly in the LAD/FBD/STL editor in the "Test/Mode" menu.

Loops in the test and process mode are handled differently in the Status block.

- **Process mode:** First loop iteration is displayed
- **Test mode:** Last loop iteration is displayed. Leads to a significant cycle time increase for many loop iterations.

In terms of function, there is also no difference between process mode and test mode.

Note

It is also possible to set breakpoints in test mode.

6.2.6 Cycle extension through Component Based Automation (CBA)

By default, the operating system of your CPU updates the PROFINET interface as well as the DP interconnections at the cycle control point. However, if you deactivated these automatic updates during configuration (e.g. to influence the time behavior of the CPU better), you must perform the update manually. This is done by calling the SFCs 112 to 114 at the appropriate times.

Reference

Information about the SFCs 112 to 114 is available in the *STEP 7 Online Help*.

Extending the OB1 cycle

The OB1 cycle is extended by

- Increasing the number of PROFINET CBA interconnections
- Increasing the number of remote peers
- Increasing the data volume
- Increasing the transfer frequency

Note

The use of CBA with cyclical PROFINET CBA interconnections requires the use of switches to maintain the specified performance. 100 Mbps full-duplex operation is mandatory with cyclical PROFINET CBA interconnections.

The following graphic shows the configuration that was used for the measurements.

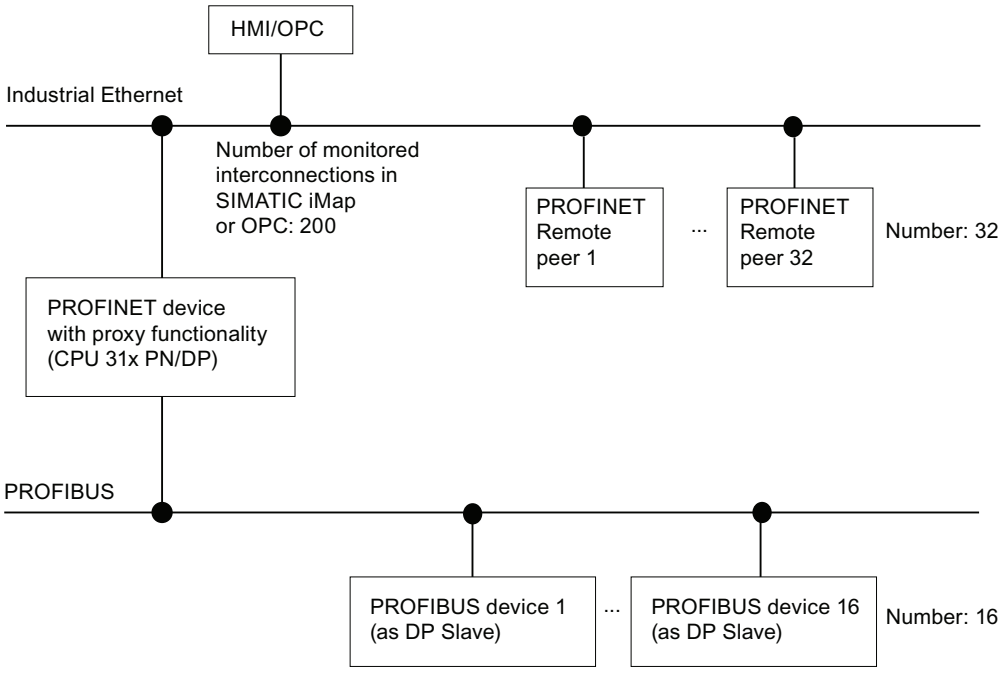

The above graphic shows incoming/outgoing remote connections	Number of connections for CPU 315, CPU 317 and CPU 314C-2 PN/DP	Quantity for CPU 319
Cyclic interconnection via Ethernet	200, scan cycle rate: every 10 ms	300, scan cycle rate: every 10 ms
Acyclic interconnection via Ethernet	100, scan cycle rate: every 500 ms	100, scan cycle rate: every 200 ms
Interconnections from the PROFINET device with proxy functionality to the PROFIBUS devices	16 x 4	16 x 4
Interconnections of PROFIBUS devices among each other	16 x 6	16 x 6

Additional marginal conditions

The maximum cycle load through communication is 20% in the measurement.

The following graphic shows that the OB 1 cycle is influenced by increasing the cyclic PROFINET CBA interconnections to remote peers on PROFINET:

Additional cycle load of the OB1 cycle (CPU 314C-2 PN/DP) depending on number of cyclic CBA interconnections

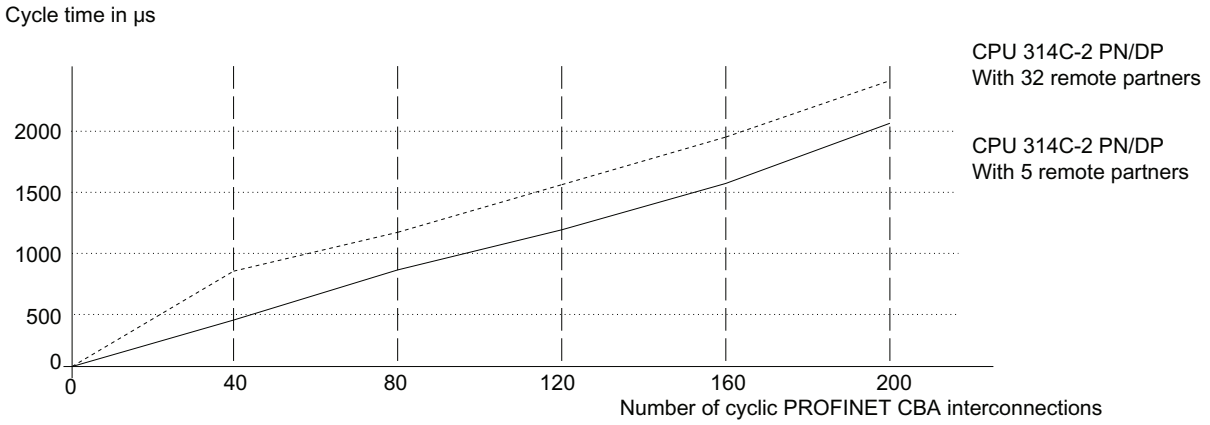

Additional cycle load of the OB1 cycle (CPU 315) depending on number of cyclic CBA interconnections

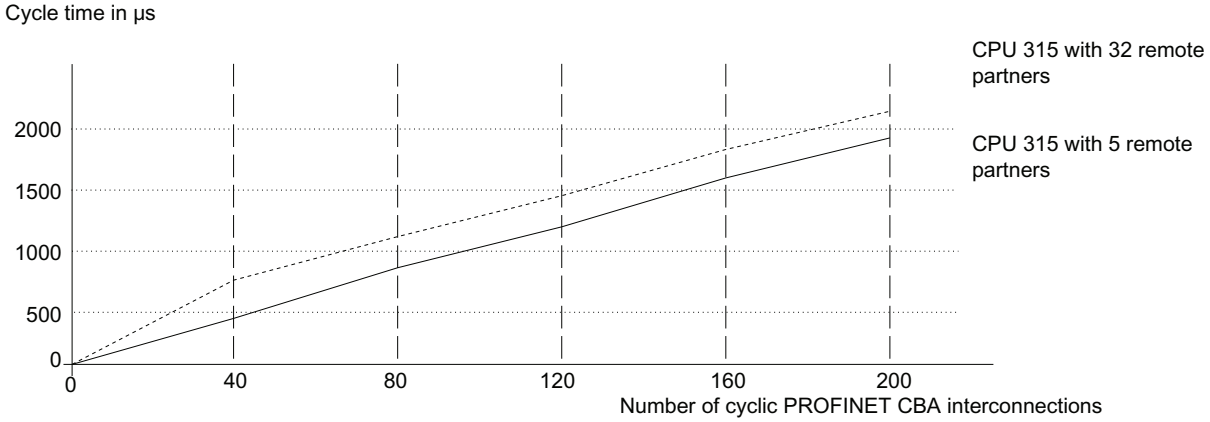

Additional cycle load of the OB1 cycle (CPU 317) depending on number of cyclic CBA interconnections

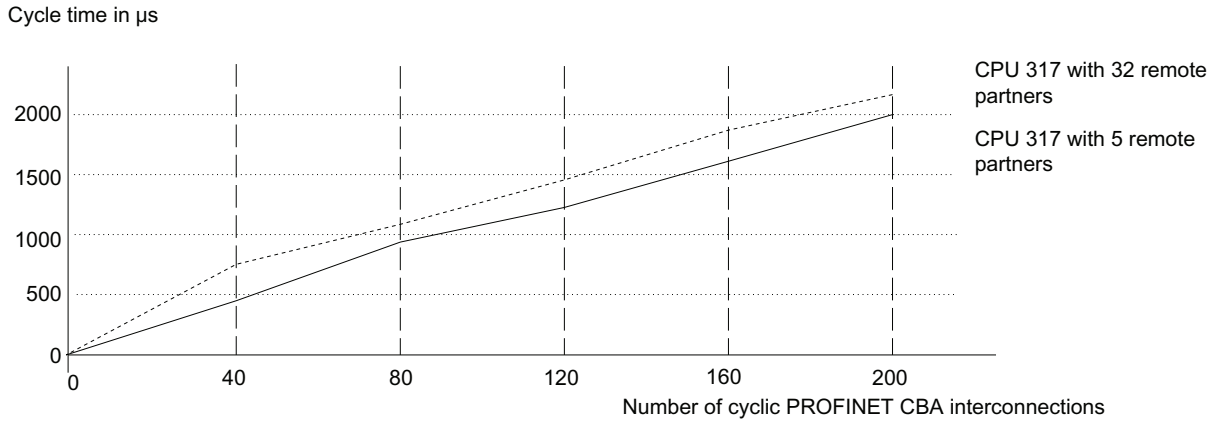

Additional cycle load of the OB1 cycle (CPU 319) depending on number of cyclic CBA interconnections

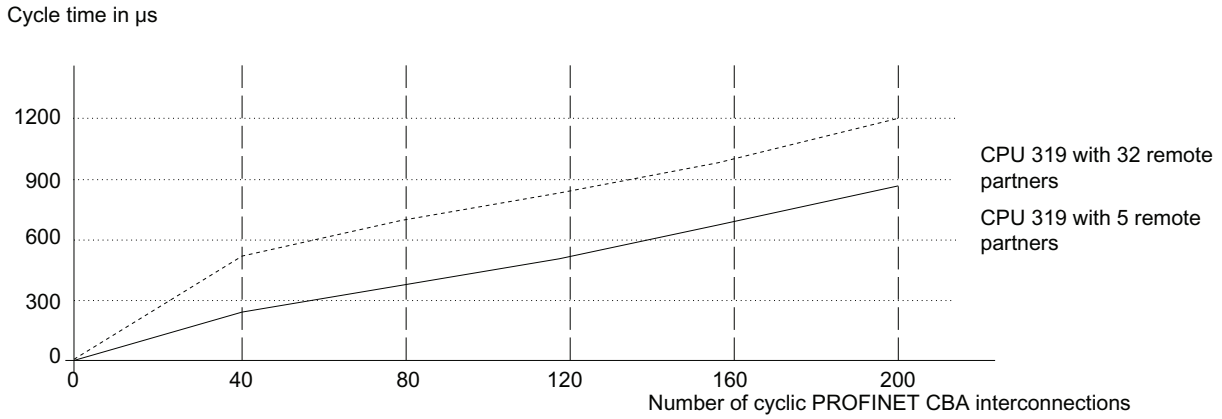

Base load through PROFIBUS devices

The 16 PROFIBUS devices with their interconnections among each other generate an **additional** base load of up to 1.0 ms.

Tips and notes

The upper graphic already includes the use of uniform values for the transfer frequency of all interconnections to a peer.

- The performance can drop by up to 50% if the values are distributed among different frequency levels.
- The use of data structures and arrays in an interconnection instead of many single interconnections with simple data structures increases the performance.

6.3 Response time

6.3.1 Overview: Response time

Definition of response time

The response time is the time from detecting an input signal to changing the output signal associated with it.

Fluctuation range

The actual response time lies between the shortest and the longest response time. You must always assume the longest response time when configuring your system.

The shortest and longest response times are contemplated below to give you an idea of the fluctuation range of the response time.

Factors

The response time depends on the cycle time and the following factors:

- Delay of the inputs and outputs of signal modules or integrated I/Os.
- Additional update times for PROFINET IO
- Additional DP cycle times on PROFIBUS DP
- Execution in the user program

Delay of inputs/outputs

Make allowances for the following module-specific delay times:

• For digital inputs:	The ON-delay time
• For digital inputs with interrupt function:	The ON-delay time + module internal pre-processing time
• For digital outputs:	The delay times of the module are negligible
• For relay outputs:	Typical delay times of 10 ms to 20 ms. The delay of relay outputs also depends on the temperature and voltage.
• For analog inputs:	cycle time for analog input
• For analog outputs:	response time at analog outputs

The delay times can be found in the technical specifications of the signal modules *S7-300 Automation System Module Data*.

Update times for PROFINET IO

If you configured your PROFINET IO system in STEP 7, STEP 7 calculates the update time for PROFINET IO. You can then view the PROFINET IO update time on your PG.

DP cycle times in the PROFIBUS DP network

If you configured your PROFIBUS DP master system in STEP 7, STEP 7 calculates the typical DP cycle time to be expected. You can then view the DP cycle time of your configuration on the PG.

The figure below gives you an overview of the DP cycle time. In this example, we assume that the data of each DP slave has an average length of 4 bytes.

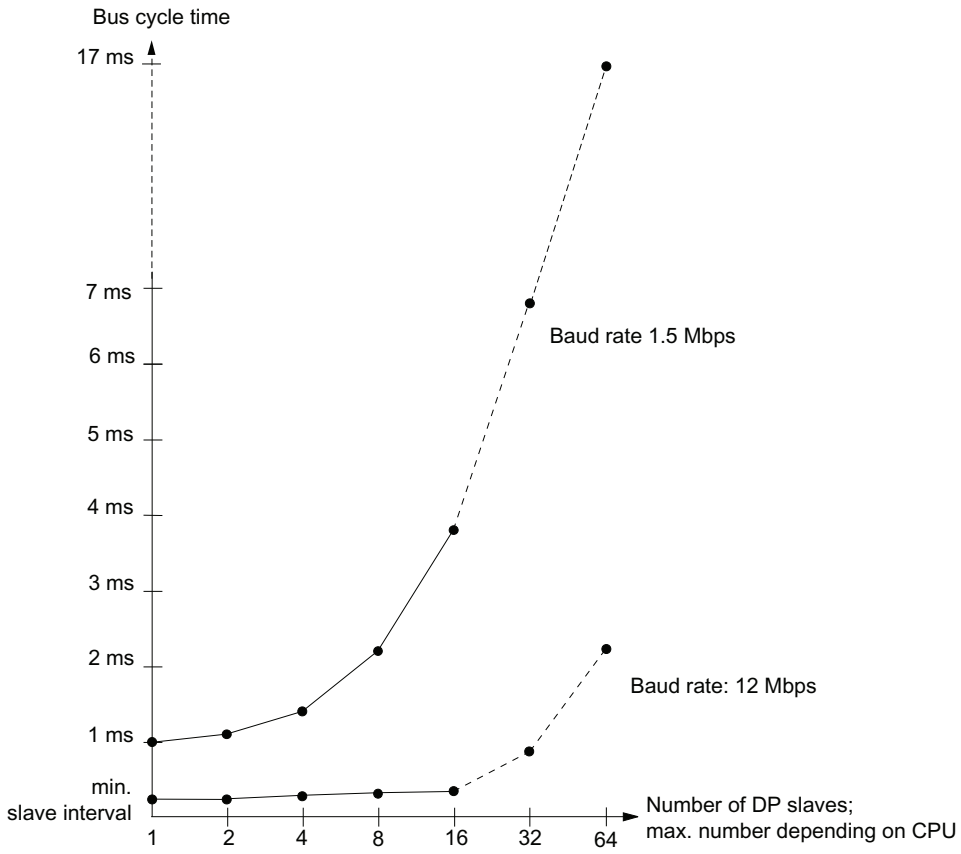

With multi-master operation on a PROFIBUS DP network, you must make allowances for the DP cycle time for each master. That is, you will have to calculate the times for each master separately and then add up the results.

6.3.2 Shortest response time

Conditions for the shortest response time

The figure below shows the conditions under which the shortest response time is achieved.

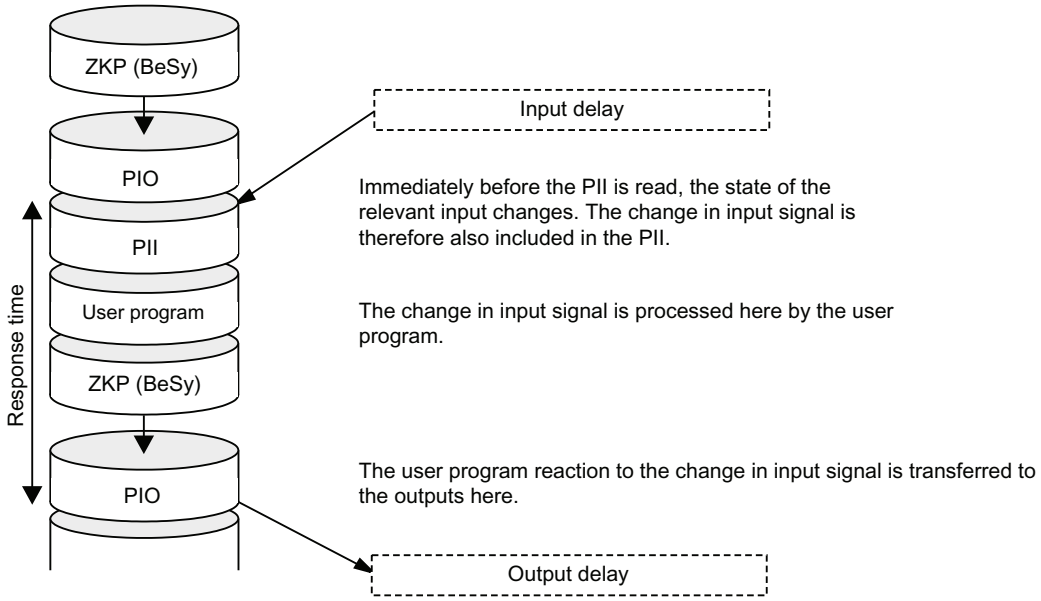

Calculation

The (shortest) response time is calculated as follows:

Table 6- 10 Formula: Shortest response time

	1 × process image transfer time for the inputs
+	1 × process image transfer time for the outputs
+	1 x program processing time
+	1 x operating system processing time at the SCCP
+	Delay of the inputs and outputs
=	**Shortest response time**

The result is equivalent to the sum of the cycle time plus the I/O delay times.

See also

Overview: Response time (Page 187)

6.3.3 Longest response time

Conditions for the longest response time

The figure below shows the conditions under which the longest response time is achieved.

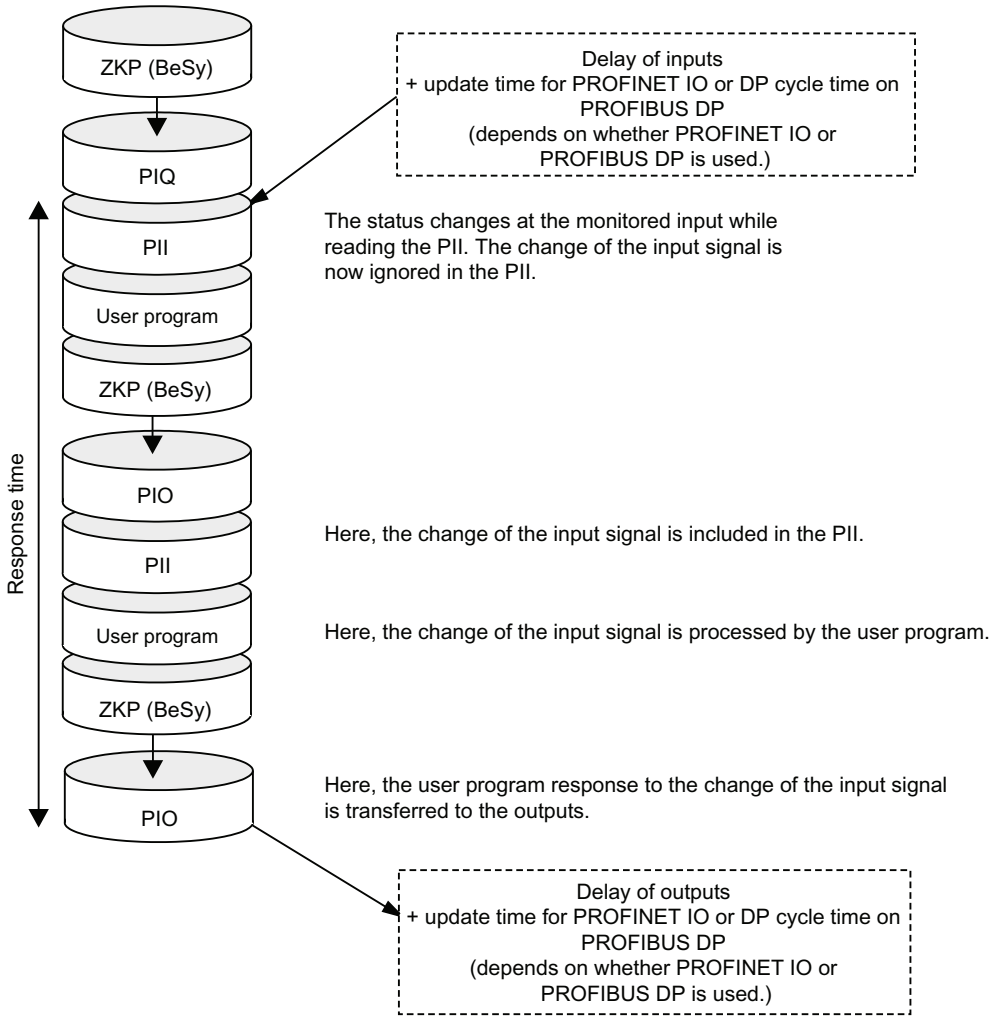

Calculation

The (longest) response time is calculated as follows:

Table 6- 11 Formula: Longest response time

	2 × process image transfer time for the inputs
+	2 × process image transfer time for the outputs
+	2 x program processing time
+	2 x operating system processing time
+	2 x PROFINET IO update time (only if PROFINET IO is used)
+	2 x DP cycle time on PROFIBUS DP (only if PROFIBUS DP is used.)
+	Delay of the inputs and outputs
=	**Longest response time**

Equivalent to the sum of 2 x the cycle time and I/O delay time plus 2 x the PROFINET IO update time or 2 x times the DP cycle time on PROFIBUS DP.

See also

Overview: Response time (Page 187)

6.3.4 Reducing the response time using I/O accesses

Reducing the response time

To achieve faster response times, use direct access to the I/O (e.g. L PEB, T PAW, ...).

Faster response times can be achieved using hardware interrupts.

See also

Shortest response time (Page 189)

Longest response time (Page 190)

6.4 Calculating method for calculating the cycle/response time

Introduction

This section gives you an overview of how to calculate the cycle/response time.

Cycle time

1. Determine the user program runtime with the help of the *instruction list*.
2. Add 10% to the value of the user program runtime.
3. Calculate and add the transfer time for the process image (refer to Chapter Calculating the cycle time (Page 174)). Corresponding guide values are found in the table *Data for calculating the process image transfer time*.
4. Add the processing time at the cycle control point. Corresponding guide values are found in the table *Operating system processing time at the cycle control point*.
5. Include in your calculation the extensions as a result of test and commissioning functions, as well as cyclic PROFINET interconnections. You can find these values in the table *Cycle time extension due to test and commissioning functions.*

The final result is the **cycle time**.

Cycle time extension due to interrupts and communication and the shortest/longest response time

1. Multiply the cycle time by the following factor:

   100 / (100 – configured communication load in %)
2. Use the instruction list to calculate the runtime of the program sections which process the interrupts. To do this, add the corresponding value from the table "Typical cycle time extension due to nested interrupts".
3. Multiply this value by the factor from step 1.
4. Add the value of the interrupt-processing program sequences to the theoretical cycle time, multiplied by the number of times that the interrupt will be triggered/probably will be triggered.

The result is an approximated **actual cycle time**. Note down the result.

Table 6- 12 Example of calculating the response time

Shortest response time	Longest response time
5. Now add the delays of the inputs and outputs.	5. Multiply the actual cycle time by factor 2.
	6. Now add the delays of the inputs/outputs, the DP cycle times on PROFIBUS-DP or the PROFINET IO update times.
6. The result you obtain is the **shortest response time**.	7. The result you obtain is the **longest response time**.

See also

Cycle extension through Component Based Automation (CBA) (Page 183)

6.5 Sample calculations for the cycle and response times

Example I

You have set up an S7300 and equipped it with following modules in rack 0:

- a CPU 314C-2 PN/DP
- 2 digital input modules SM 321; DI 32 x DC 24 V (each with 4 bytes in the PI)
  ⇒ 8 bytes in the process image
- 2 digital output modules SM 322; DO 32 x DC 24 V/0,5 A (each with 4 bytes in the PI)
  ⇒ 8 bytes in the process image

User program

- According to the instruction list, the user program runtime is 5 ms.
- There is no active communication.

Calculating the cycle time

The cycle time for the example results from the following times:

- User program execution time:

  5 ms plus user program processing time extension of 10% ⇒ 5.5 ms
- Process image transfer time (refer to Calculating the cycle time (Page 174)):

  Process image of inputs: 150 µs + 8 bytes x 35 µs = approx. 0.43 ms

  Process image of outputs: 150 µs + 8 bytes x 35 µs = approx. 0.43 ms
- Operating system runtime at cycle control point: 0.15 ms

Cycle time = 5.5 ms + 0.43 ms + 0.43 ms + 0.15 ms = 6.51 ms

Calculation of the actual cycle time

- There is no active communication.
- There is no interrupt processing.

Hence, the **actual cycle time** is 6.51 ms.

Calculating the longest response time

Longest response time:

6.51 ms x 2 = 13.02 ms.

- The delay of the inputs and outputs is negligible.
- Since neither PROFIBUS DP nor PROFINET IO are being used, you do not have to make allowances for any DP cycle times on PROFIBUS DP or for PROFINET IO update times.
- There is no interrupt processing.

Example II

You have configured an S7300 and equipped it with the following modules in 2 racks:

- a CPU 314C-2 PN/DP

  Parameterization of the cycle load as a result of communication: 40 %
- 4 digital input modules SM 321; DI 32 x DC 24 V(each with 4 bytes in the PI)
  ⇒ 16 bytes in the process image
- 3 digital output modules SM 322; DO 16 x DC 24 V/0.5 A(each with 2 bytes in the PI)
  ⇒ 6 bytes in the process image
- 2 analog input modules SM 331; AI 8 x 12 Bit (not in the PI)
  ⇒ 0 bytes in the process image
- 2 analog output modules SM 332; AO 4 x 12 Bit (not in the PI)
  ⇒ 0 bytes in the process image

User program

- According to the instruction list, the user program runtime is 10.0 ms.

Calculating the cycle time

The cycle time for the example results from the following times:

- User program execution time:

  10 ms plus user program processing time extension of 10 % ⇒ 11.0 ms
- Process image transfer time (refer to Calculating the cycle time (Page 174)):

  Process image of inputs: 150 µs + 16 bytes x 35 µs = approx. 0.71 ms

  Process image of outputs: 150 µs + 6 bytes x 35 µs = approx. 0.36 ms
- Increased transfer time due to 2nd rack 40 µs = 0.04 ms
- Operating system runtime at cycle control point: 0.15 ms

The sum of the listed times is equivalent to the cycle time:

Cycle time = 11.0 ms + 0.71 ms + 0.36 ms + 0.04 ms = 0.15 ms = 12.26 ms

Calculation of the actual cycle time

Taking into account the communication load of 40%:

12.26 ms x 100 / (100 - 40) = 20.43 ms

Thus, considering the time slices, the **actual cycle time** is **20.43 ms**.

Calculating the longest response time

- Actual cycle time x 2 = 20.43 ms x 2 = 40.86 ms.
- Delay times of the inputs and outputs
  - The digital input module SM 321; DI 32 x DC 24 Vhas an input delay of not more than **4.8 ms** per channel.
  - The digital output module SM 322; DO 16 x DC 24 V/0.5 A has a **negligible** output delay.
  - The analog input module SM 331; AI 8 x 12 Bit was parameterized for an interference frequency suppression of 50 Hz. The result is a conversion time of 22 ms per channel. Since 8 channels are active, the result is a cycle time of **176 ms** for the analog input module.
  - The analog output module SM 332; AO 4 x 12 Bit was parameterized for the measuring range of 0 to 10 V. This results in a conversion time of 0.8 ms per channel. Since 4 channels are active, the result is a cycle time of 3.2 ms. A settling time of 0.1 ms for a resistive load must be added to this value. The result is a response time of **3.3 ms** for an analog output.
- Since neither PROFIBUS DP nor PROFINET IO are being used, you do not have to make allowances for any DP cycle times on PROFIBUS DP or for PROFINET IO update times.
- Response times plus delay times of the inputs and outputs:
  - **Scenario 1:** An output channel of the digital output module is set when a digital input signal is read in. The result is as follows:

    Response time = 40.86 ms + 4.8 ms = 45.66 ms.
  - **Scenario 2:** An analog value is read in, and an analog value is output. The result is as follows:

    Longest response time = 40.86 ms + 176 ms + 3.3 ms = 220.16 ms.

6.6 Interrupt response time

6.6.1 Overview: Interrupt response time

Definition of interrupt response time

The interrupt response time is the time from the first occurrence of an alarm signal to executing the first operation in the interrupt OB. General rule: Higher priority interrupts are handled first. This means that the interrupt response time is extended by the program execution time of the higher priority interrupt OBs and interrupt OBs with the same priority that occurred earlier and have not been processed yet (queue).

Calculation

The formulas below show how you can calculate the minimum and maximum interrupt response times.

Table 6- 13 Process and diagnostic interrupt response times

Calculation of the minimum interrupt response time	Calculation of the maximum interrupt response time
Minimum interrupt response time of the CPU + Minimum interrupt response time of the signal modules + PROFINET IO update time (only if PROFINET IO is used) + DP cycle time on PROFIBUS DP (only if PROFIBUS DP is used)	Maximum interrupt response time of the CPU + Maximum interrupt response time of the signal modules + 2 x PROFINET IO update time (only if PROFINET IO is used) + 2 x DP cycle time on PROFIBUS DP (only if PROFIBUS DP is used)
= Shortest interrupt response time	= Longest interrupt response time

Increasing the maximum interrupt response time with communication

The maximum interrupt response time is extended when the communication functions are active. The additional time is calculated using the following formula:

tv: 200 µs + 1000 µs x n%

n = Setting of the cycle load as a result of communication

The result is added to the maximum interrupt response time.

Process/diagnostic interrupt response times of the CPUs

Table 6- 14 Process and diagnostic interrupt response times

CPU	Hardware interrupt response times			Diagnostic interrupt response times	
	external min.	external max.	Integrated I/O max.	min.	max.
CPU 312	0.3 ms	0.5 ms	-	0.4 ms	0.6 ms
CPU 312C	0.3 ms	0.5 ms	0.5 ms	0.4 ms	0.6 ms
CPU 313C	0.3 ms	0.5 ms	0.5 ms	0.4 ms	0.6 ms
CPU 313C-2	0.3 ms	0.5 ms	0.5 ms	0.4 ms	0.6 ms
CPU 314	0.3 ms	0.5 ms	-	0.4 ms	0.6 ms
CPU 314C-2	0.3 ms	0.5 ms	0.5 ms	0.4 ms	0.6 ms
CPU 314C-2 PN/DP	0.3 ms	0.5 ms	0.5 ms	0.4 ms	0.6 ms
CPU 315-2 DP CPU 315-2 PN/DP	0.3 ms	0.5 ms	-	0.4 ms	0.6 ms
CPU 317-2 DP CPU 317-2 PN/DP	0.2 ms	0.4 ms	-	0.2 ms	0.4 ms
CPU 319-3 PN/DP	0.2 ms	0.4 ms	-	0.2 ms	0.4 ms

Signal modules

The **hardware interrupt response time** of signal modules is determined by the following factors:

- Digital input modules

  Hardware interrupt response time = internal interrupt processing time + input delay

  You will find these times in the data sheet for the respective digital input module.

- Analog input modules

  Hardware interrupt response time = internal interrupt processing time + conversion time

  The internal interrupt processing time for analog input modules can be neglected. The conversion times can be found in the data sheet for the individual analog input modules.

The **diagnostic interrupt response time** of signal modules is equivalent to the period that expires between the time a signal module detects a diagnostic event and the time this signal module triggers the diagnostic interrupt. This short time can be neglected.

Hardware interrupt processing

Hardware interrupt processing begins when the hardware interrupt OB 40 is called. Higher-priority interrupts stop hardware interrupt processing. Direct access to I/O modules is executed during the execution time of the operation. After hardware interrupt processing has terminated, cyclic program execution continues or further interrupt OBs of equal or lower priority are called and processed.

6.6.2 Reproducibility of time-delay and watchdog interrupts

Definition of "reproducibility"

Time-delay interrupt:

The time between the call of the first instruction of the interrupt OBs up to the programmed time of interrupt.

Cyclic interrupt:

The fluctuation range of the interval between two successive calls, measured between the respective initial operations of the interrupt OB.

Reproducibility

The following times apply for the CPUs described in this manual, with the exception of CPU 319:

- Time-delay interrupt: ±100 µs
- Cyclic interrupt: ±100 µs

The following times apply in the case of CPU 319:

- Time-delay interrupt: ±60 µs
- Cyclic interrupt: ±60 µs

These times only apply if the interrupt can actually be executed at this time and if it is not delayed, for example, by higher-priority interrupts or queued interrupts of equal priority.

6.7 Example of interrupt response time calculation

Design

You have set up an S7-300, consisting of a CPU 314C-2 PN/DP and 4 digital modules, in the central rack. One digital input module is the SM 321; DI 16 x DC 24 V, with hardware and diagnostic interrupts.

You have enabled only the hardware interrupt in your CPU and SM parameterization. You decided not to use time-driven processing, diagnostics or error handling. You have set a cycle load of 20% due to communication.

You have parameterized an input delay of 0.5 ms for the digital input modules.

No activities are required at the cycle control point.

Calculation

In this example, the hardware interrupt response time is based on following time factors:

- Hardware interrupt response time of CPU 314C-2 PN/DP: 0.5 ms
- Extension due to communication according to the formula (refer to Overview: Interrupt response time (Page 196)):

  200 µs + 1000 µs x 20% = 400 µs = 0.4 ms
- The hardware interrupt response time of the SM 321; DI 16 x DC 24 V:
  - Internal interrupt processing time: 0.25 ms
  - Input delay: 0.5 ms
- Since neither PROFIBUS DP nor PROFINET IO are being used, you do not have to make allowances for any DP cycle times on PROFIBUS DP or for PROFINET IO update times.

The hardware interrupt response time is equivalent to the sum of the listed time factors:

Process interrupt response time = 0.5 ms + 0.4 ms + 0.25 ms + 0.5 ms = **1.65 ms**.

This calculated hardware interrupt response time expires between the time a signal is received at the digital input and the first operation in OB 40.

General technical specifications 7

7.1 Standards and certifications

Introduction

Contents of general technical specifications:

- standards and test values satisfied by modules of the S7-300 automation system
- test criteria of S7-300 modules.

Note

Information about the nameplate

You will find the current identifiers and approvals on the rating plate of the respective product.

Safety information

⚠ WARNING

Personal injury and damage to property may occur.

In potentially explosive environments, there is a risk of personal injury and damage to property if you remove S7-300 connectors in runtime.

In potentially explosive environments, always isolate the S7-300 before you remove any connectors.

⚠ WARNING

Explosion hazard

If you replace components, compliance with Class I, DIV. 2 could be compromised.

⚠ WARNING

This device is only appropriate for use in Class I, Div. 2, Group A, B, C, D, or in non-hazardous areas.

Test logos and their meaning

The section below describes the test logos attached to the module and explains their meaning.

CE Label

The S7-300 automation system satisfies requirements and safety-related objectives according to EC Directives listed below, and conforms with the harmonized European standards (EN) for programmable controllers announced in the Official Journals of the European Community:

- 2006/95/EC "Electrical Equipment Designed for Use within Certain Voltage Limits" (Low-Voltage Directive)
- 2004/108/EC "Electromagnetic Compatibility" (EMC Directive)
- 94/9/EC "Equipment and protective systems intended for use in potentially explosive atmospheres" (Explosion Protection Directive)

The EC declaration of conformity is held on file available to competent authorities at:

Siemens AG
Industry Sector
I IA AS R&D DH A
P.O. Box 1963
D-92209 Amberg

These files are also available for download on the Customer Support Internet pages, keyword "Declaration of Conformity".

UL approval

Underwriters Laboratories Inc., complying with

- UL 508 (Industrial Control Equipment)

CSA approval

Canadian Standards Association to

- C22.2 No. 142 (Process Control Equipment)

or

cULus approval

Underwriters Laboratories Inc., complying with

- UL 508 (Industrial Control Equipment)
- CSA C22.2 No. 142 (Process Control Equipment)

or

cULus HAZ. LOC approval

Underwriters Laboratories Inc., complying with

- UL 508 (Industrial Control Equipment)
- CSA C22.2 No. 142 (Process Control Equipment)
- UL 1604 (Hazardous Location)
- CSA C22.2 No. 213 (Hazardous Location)

APPROVED for use in
Class I, Division 2, Group A, B, C, D Tx;
Class I, Zone 2, Group IIC Tx

FM approval

Factory Mutual Research (FM) to
Approval Standard Class Number 3611, 3600, 3810
APPROVED for use in Class I, Division 2, Group A, B, C, D Tx;
Class I, Zone 2, Group IIC Tx

ATEX approval

In accordance with EN 60079-15 (Electrical Apparatus for Potentially Explosive Atmospheres; Type of Protection "n") and EN 60079-0 (Electrical apparatus for potentially explosive gas atmospheres - Part 0: General Requirements)

II 3 G Ex nA II T4..T6

WARNING

Personal injury and damage to property may occur.

In potentially explosive environments, there is a risk of personal injury and damage to property if you remove S7-300 connectors in runtime.

In potentially explosive environments, always isolate the S7-300 before you remove any connectors.

Tick mark for Australia and New Zealand

The S7-300 automation system meets requirements of standards to AS/NZS CISPR 16.

Note

The UL/CSA or cULus approvals for your product are specified by the identifiers on the rating plate.

IEC 61131

The S7-300 automation system satisfies requirements and criteria to IEC 61131-2 (Programmable Controllers, Part 2: Equipment requirements and tests).

Marine approval

Classification societies:

- ABS (American Bureau of Shipping)
- BV (Bureau Veritas)
- DNV (Det Norske Veritas)
- GL (Germanischer Lloyd)
- LRS (Lloyds Register of Shipping)
- Class NK (Nippon Kaiji Kyokai)

Use in industrial environments

SIMATIC products are designed for industrial applications.

Table 7- 1 Use in industrial environments

Field of application	Noise emission requirements	Noise immunity requirements
Industry	EN 61000-6-4: 2007	EN 61000-6-2: 2005

Use in residential areas

Note

The S7-300 is intended for use in industrial environments and can cause interference on radio/television reception if operated in residential areas.

To operate an S7-300 in a residential area, it's RF emission must comply with Limit Value Class B to EN 55011.

Suitable measures for achieving RF interference level Class B include, for example:

- S7-300 installation in grounded switch cabinets / cubicles
- Use of noise filters in the supply lines

7.2 Electromagnetic compatibility

Definition

Electromagnetic compatibility (EMC) is the ability of an electrical installation to function satisfactorily in its electromagnetic environment without interfering with that environment.

The S7-300 modules also satisfy requirements of EMC legislation for the European domestic market. Compliance of the S7-300 system with specifications and directives on electric design is prerequisite.

Pulse-shaped disturbance

The table below shows the electromagnetic compatibility of S7 modules in areas subject to pulse-shaped interference.

Pulse-shaped disturbance	Test voltage	corresponds with degree of severity
Electrostatic discharge according to IEC 61000-4-2.	Air discharge: ± 8 kV Contact discharge: ± 4 kV	3 2
Bursts (fast transient interference in accordance with IEC 61000-4-4)	2 kV (power supply lines) 2 kV (signal lines > 3 m) 1 kV (signal lines < 3 m)	3 3
High-energy single pulse (surge) to IEC 61000-4-5 External protective circuit required (see Lightning and overvoltage protection)		3
• asymmetric coupling	2 kV (power supply lines) DC with protective elements 2 kV (signal / data line only > 3 m), with protective elements as required	
• symmetric coupling	1 kV (power supply lines) DC with protective elements 1 kV (signal / data line only > 3 m), with protective elements as required	

Additional measures

When connecting an S7-300 system to the public network, always ensure compliance with Limit Value Class B to EN 55022.

Sinusoidal disturbance

The table below shows the electromagnetic compatibility of the S7-300 modules in areas subject to sinusoidal interference.

- RF radiation

RF radiation to IEC 61000-4-3 Electromagnetic RF field, amplitude-modulated		corresponds with degree of severity
80 to 1000 MHz; 1.4 to 2 GHz	2.0 GHz to 2.7 GHz	3, 2, 1
10 V/m	1 V/m	
80 % AM (1 kHz)		

- RF coupling

RF coupling to IEC 61000-4-6	corresponds with degree of severity
0.15 to 80 MHz	3
10 V_{rms} unmodulated	
80 % AM (1 kHz)	
150 Ω source impedance	

Emission of radio interference

Electromagnetic interference emission to EN 55016: Limit value class A (measured at a distance of 10 m).

Frequency	Emitted interference
30 MHz to 230 MHz	< 40 dB (µV/m)Q
230 MHz to 1000 MHz	< 47 dB (µV/m)Q

Noise emission via AC mains to EN 55016: Limit value class A, Group 1.

Frequency	Emitted interference
0.15 to 0.5 MHz	< 79 dB (µV/m)Q < 66 dB (µV/m)M
0.5 MHz to 5 MHz	< 73 dB (µV/m)Q < 60 dB (µV/m)M
5 MHz to 30 MHz	< 73 dB (µV/m)Q < 60 dB (µV/m)M

7.3 Transportation and storage conditions for modules

Introduction

The shipping and storage conditions of S7-300 modules surpass requirements to IEC 61131-2. The data below apply to modules shipped or put on shelf in their original packing.

The modules are compliant with climatic conditions to IEC 60721-3-3, Class 3K7 (storage), and with IEC 60721-3-2, Class 2K4 (shipping.)

Mechanical conditions are compliant with IEC 60721-3-2, Class 2M2.

Shipping and storage conditions for modules

Type of condition	Permissible range
Free fall (in shipping package)	≤1 m
Temperature	From -40 °C to +70 °C
Barometric pressure	1080 hPa to 660 hPa (corresponds with an altitude of -1000 m to 3500 m)
Relative humidity	10% to 95%, no condensation
Sinusoidal oscillation to IEC 60068-2-6	5 - 9 Hz: 3.5 mm 9 - 150 Hz: 9.8 m/s^2
Shock to IEC 60068-2-29	250 m/s^2, 6 ms, 1000 shocks

7.4 Mechanical and climatic environmental conditions for S7-300 operation

Operating conditions

S7-300 systems are designed for stationary use in weather-proof locations. The operating conditions surpass requirements to DIN IEC 60721-3-3.

- Class 3M3 (mechanical requirements)
- Class 3K3 (climatic requirements)

Use with additional measures

The S7-300 may not be used under the conditions outlined below without taking additional measures:

- At locations with a high degree of ionizing radiation
- In aggressive environments caused, for example, by
  - The development of dust
  - Corrosive vapors or gases
  - Strong electric or magnetic fields
- In installations requiring special monitoring, for example
  - Elevators
  - Electrical plants in potentially hazardous areas

An additional measure could be an installation of the S7-300 in a cabinet or housing.

Mechanical environmental conditions

The table below shows the mechanical environmental conditions in the form of sinusoidal oscillations.

Frequency band	Continuous	Infrequently
$10 \leq f \leq 58$ Hz	0,0375 mm amplitude	0.75 mm amplitude
$58 \leq f \leq 150$ Hz	0,5 g constant acceleration	1 g constant acceleration

Reducing vibrations

If your S7-300 modules are exposed to severe shock or vibration, take appropriate measures to reduce acceleration or the amplitude.

We recommend the installation of the S7-300 on damping materials (for example, rubber-bonded-to-metal mounting.)

Test of mechanical environmental conditions

The table below provides important information with respect to the type and scope of the test of ambient mechanical conditions.

Condition tested	Test Standard	Comment
Vibration	Vibration test to IEC 60068-2-6 (sinusoidal)	Type of oscillation: Frequency sweeps with a rate of change of 1 octave/minute. 5 Hz ≤ f ≤ 9 Hz, 3.5 mm constant amplitude 9 Hz ≤ f ≤ 150 Hz, 1 g constant acceleration Duration of oscillation: 10 frequency sweeps per axis at each of three vertically aligned axes
Shock	Shock, tested to IEC 60068-2-27	Type of shock: Half-sine Shock intensity: 15 g peak value, 11 ms duration Direction of shock: 3 shocks in each direction (+/-) at each of three vertically aligned axes

Climatic environmental conditions

The S7-300 may be operated on following environmental conditions:

Environmental conditions	Permissible range	Comments
Temperature: horizontal mounting position: vertical mounting position:	 0°C to 60 °C 0°C to 40 °C	-
Relative humidity	from 10 to 95%	No condensation, corresponds to relative humidity (RH) Class 2 to IEC 61131, Part 2
Barometric pressure	1080 hPa to 795 hPa	Corresponds with an altitude of -1000 m to 2000 m
Concentration of pollutants	SO_2: < 0.5 ppm; RH < 60 %, no condensation $H2_S$: < 0.1 ppm; RH < 60 %, no condensation	Test: 10 ppm; 4 days Test: 1 ppm; 4 days
	ISA-S71.04 severity level G1; G2; G3	-

7.5 Specification of dielectric tests, protection class, degree of protection, and rated voltage of S7-300

Test voltage

Proof of dielectric strength must be provided in the type test at a test voltage to IEC 61131-2:

Circuits with rated voltage V_e to other circuits or ground.	Test voltage
< 50 V	500 VDC
< 150 V	2500 V DC
< 250 V	4000 V DC

Protection class

Protection class I to IEC 60536, i.e., a protective conductor must be connected to the mounting rail!

Protection against the ingress of foreign matter and water

- Degree of protection IP 20 to IEC 60529, i.e., protection against contact with standard probes.

No protection against the ingress of water.

7.6 Rated voltages of S7-300

Rated operating voltages

The S7-300 modules operate at different rated voltages. The table shows the rated voltages and corresponding tolerances.

Rated voltages	Tolerance
24 V DC	19.2 V DC to 28.8 V DC
120 VAC	93 VAC to 132 VAC
230 VAC	187 VAC to 264 VAC

Technical specifications of CPU 31xC 8

8.1 General technical specifications

8.1.1 Dimensions of CPU 31xC

Each CPU features the same height and depth, only the width differs.

- Height: 125 mm
- Depth: 115 mm, or 180 mm with opened front cover

Width of CPU

CPU	Width
CPU 312C	80 mm
CPU 313C	120 mm
CPU 313C-2 PtP	80 mm
CPU 313C-2 DP	80 mm
CPU 314C-2 PtP	120 mm
CPU 314C-2 DP	120 mm
CPU 314C2 PN/DP	120 mm

8.1.2 Technical specifications of the Micro Memory Card

Compatible SIMATIC Micro Memory Cards

The following memory modules are available:

Table 8- 1 Available SIMATIC Micro Memory Cards

Type of Micro Memory Card	Order number	Required for a firmware update via SIMATIC Micro Memory Card
64 KB	6ES7953-8LFxx-0AA0	-
128 KB	6ES7953-8LGxx-0AA0	-
512 KB	6ES7953-8LJxx-0AA0	-
2 MB	6ES7953-8LLxx-0AA0	Minimum requirement for CPUs without DP interface
4 MB	6ES7953-8LMxx-0AA0	Minimum requirements for CPUs with DP interface, but without PN interface
8 MB	6ES7953-8LPxx-0AA0	Minimum requirements for CPUs with DP and PN interface

Maximum number of loadable blocks on the SIMATIC Micro Memory Card

The number of blocks that can be stored on the SIMATIC Micro Memory Card depends on the capacity of the SIMATIC Micro Memory Card being used The maximum number of blocks that can be loaded is therefore limited by the capacity of your SIMATIC Micro Memory Card (including blocks generated with the "CREATE DB" SFC)

Table 8- 2 Maximum number of loadable blocks on the SIMATIC Micro Memory Card

Size of SIMATIC Micro Memory Card	... Maximum number of blocks that can be loaded
64 KB	768
128 KB	1024
512 KB	2560
2 MB	The maximum number of blocks that can be loaded on a specific CPU is less than the number of blocks that can be stored on the SIMATIC Micro Memory Card. For information about the maximum number of blocks that can be loaded on a specific CPU, refer to the corresponding technical specification.
4 MB	
8 MB	

8.2 CPU 312C

Technical specifications

Table 8- 3 Technical specifications of CPU 312C

Technical specifications	
CPU and version	
• MLFB	6ES7312-5BF04-0AB0
• Hardware version	01
• Firmware version	V3.3
• Associated programming package	STEP 7 as of V5.5 + SP1 or STEP 7 as of V5.3 + SP2 with HSP 203
Memory	
Main memory	
• Integrated	64 KB
• Expandable	No
• Maximum size of non-volatile memory for retentive data blocks	64 KB
Load memory	
• Pluggable (MMC)	Yes
• Pluggable (MMC), max.	8 MB
• Minimum data retention on the Micro Memory Card (after the last programming action)	10 years
Backup	
• Available	Yes (ensured with Micro Memory Card - maintenance-free)
• Without battery	Yes (program and data)
Execution times	
• For bit operation, min.	0.1 µs
• For word operations, min.	0.24 µs
• For fixed-point arithmetic, min.	0.32 µs
• Minimum for floating-point arithmetic	1.1 µs
Timers/counters and their retentivity	
S7 counters	
• Number	256

Technical specifications	
Retentivity	
• Configurable	Yes
• Default	Z 0 to Z 7
Counting range	
• Low limit	0
• High limit	999
IEC counter	
• Available	Yes
• Type	SFB
• Number	Unlimited (limited only by main memory size)
S7 timers	
• Number	256
Retentivity	
• Configurable	Yes
• Default	No retentivity
Time setting range	
• Low limit	10 ms
• High limit	9990 s
IEC timer	
• Available	Yes
• Type	SFB
• Number	Unlimited (limited only by main memory size)
Data areas and their retentivity	
Bit memory	
• Number, max.	256 bytes
• Retentivity, available	Yes (from MB 0 to MB 255)
• Retentivity, default	From MB 0 to MB 15
• Number of clock memories	8 (1 memory byte)
Data blocks	
• Number, max.	1024 (in the number range 1 to 16000)
• Size, max.	64 kB
• Retentivity, configurable	Yes, via non-retain feature on the DB
• Retentivity, default	Yes
Local data	
• Per priority class, max.	32 KB (max. 2048 bytes per block)

Technical specifications	
Blocks	
• Number of blocks (total)	1024 (DBs, FCs, FBs) The maximum number of blocks that can be loaded may be reduced due to the Micro Memory Card you are using.
OB	See instruction list
• Size, max.	64 KB
• Number of free cycle OBs	1 (OB 1)
• Number of time-of-day interrupt OBs	1 (OB 10)
• Number of time-delay interrupt OBs	2 (OB 20, 21)
• Number of cyclic interrupt OBs	4 (OB 32, 33, 34, 35)
• Number of hardware interrupt OBs	1 (OB 40)
• Number of restart OBs	1 (OB 100)
• Number of asynchronous error OBs	4 (OB 80, 82, 85, 87)
• Number of synchronous error OBs	2 (OB 121, 122)
Nesting depth	
• Per priority class	16
• Additionally within an error OB	4
FB	See instruction list
• Number, max.	1024 (in the number range 0 to 7999)
• Size	64 KB
FC	See instruction list
• Number, max.	1024 (in the number range 0 to 7999)
• Size	64 KB
Address ranges (inputs/outputs)	
I/O address area	
• Inputs	1024 bytes (freely addressable)
• Outputs	1024 bytes (freely addressable)
Distributed	
• Inputs	-
• Outputs	-
I/O process image	
• Inputs	1024 bytes
• Outputs	1024 bytes
• Inputs, adjustable	1024 bytes

Technical specifications	
• Outputs, adjustable	1024 bytes
• Inputs, preset	128 bytes
• Outputs, preset	128 bytes
Digital channels	
• Integrated channels (DI)	10
• Integrated channels (DO)	6
• Inputs	266
• Outputs	262
• Inputs, of those central	266
• Outputs, of those central	262
Analog channels	
• Integrated channels (AI)	-
• Integrated channels (AO)	-
• Inputs	64
• Outputs	64
• Inputs, of those central	64
• Outputs, of those central	64
Hardware configuration	
• Racks, max.	1
• Modules per rack, max.	8
Number of DP masters	
• Integrated	-
• Via CP	4
Supported number of FMs and CPs (recommended)	
• FM	8
• CP, point-to-point	8
• CP, LAN	4
Time	
Clock	
• Software clock	Yes
• Buffered	No
• Can be synchronized	Yes
• Factory setting	DT#1994-01-01-00:00:00
• Behavior of the real-time clock after POWER ON	The clock continues at the time of day it had when power was switched off.

Technical specifications	
• Deviation per day, max.	10 s, typ.: 2 s
Runtime meter	
• Number	1
• Number/number range	0
• Range of values	0 to 2^{31} hours (using the SFC 101)
• Granularity	1 hour
• Retentive	Yes; must be manually restarted after every restart
Clock synchronization	
• supported	Yes
• On MPI, master	Yes
• On MPI, slave	Yes
• On the AS, master	Yes
• On the AS, slave	No
S7 signaling functions	
• Number of stations that can be logged on for reporting functions, max.	6 (depends on the number of connections configured for PG/OP and S7 basic communication)
• Process error diagnostic messages	Yes
• Simultaneously enabled interrupt S blocks, max.	300
Test and startup functions	
Status/modify	
• Status/modify variable	Yes
• Variables	Inputs, outputs, bit memories, DBs, timers, counters
• Maximum number of variables	30
• Status variables, max.	30
• Modify variables, max.	14
Forcing	
• Forcing	Yes
• Variables	Inputs, outputs
• Maximum number of tags	10
Status block	Yes, up to 2 at the same time
Single step	Yes
• Number of breakpoints	4

Technical specifications	
Diagnostic buffer	
• Available	Yes
• Maximum number of entries	500
• Configurable	No
• Of which are power-failure-proof	100, only the last 100 entries are retentive
• Maximum number of entries that can be read in RUN	499
• Number of entries that can be set in RUN	Yes, from 10 to 499
• Number of preset entries in RUN	10
Service data	
• Can be read out	Yes
Monitoring function	
• Status LEDs	Yes
Communication functions	
PG/OP communication	Yes
Prioritized OCM communication	
• Supported	No
Routing	No
• Number of routing connections	0
• Data record routing	No
Global data communication	
• supported	Yes
• Number of GD circles, max.	8
• Number of GD packets, max.	8
• Number of GD packets, sender, max.	8
• Number of GD packets, receiver, max.	8
• Size of GD packets, max.	22 Byte
• Size of GD packets, of those consistent, max.	22 Byte
S7 basic communication	
• Supported	Yes
• User data per job, max.	76 Byte
• User data per job, consistent, max.	76 bytes (for X_SEND or X_RCV) 64 bytes (for X_PUT or X_GET as the server)
S7 communication	
• Supported	Yes
• As server	Yes

Technical specifications	
• As client	Yes, via CP and loadable FBs
• User data per job, max.	180 bytes (for PUT/GET)
• User data per job, consistent, max.	240 bytes as server
S5-compatible communication	
• Supported	Yes, via CP and loadable FCs
Number of connections	
• Total	6
Suitable for PG communication	5
• PG communication, reserved	1
• PG communication, configurable, min.	1
• PG communication, configurable, max.	5
Suitable for OP communication	5
• OP communication, reserved	1
• OP communication, configurable, min.	1
• OP communication, configurable, max.	5
Suitable for S7 basic communication	2
• S7 basic communication, reserved	0
• S7 basic communication, configurable, min.	0
• S7 basic communication, configurable, max.	2
Connection system	
• Required front connector	1 X 40-pin
Interfaces	
1st interface	
Interface designation	X1
Type of interface	Integrated RS 485 interface
Hardware	RS 485
• electrically disconnected	No
• Interface power supply (15 V DC to 30 V DC), max.	200 mA
Functionality	
• MPI	Yes
• DP master	No
• DP slave	No
• Point-to-point connection	No
MPI	
Services	

Technical specifications	
• PG/OP communication	Yes
• Routing	No
• Global data communication	Yes
• S7 basic communication	Yes
• S7 communication	Yes (only server; connection configured at one end)
• S7 communication, as client	No, but via CP and loadable FBs
• S7 communication, as server	Yes
Transmission rate, max.	187,5 kbps
Programming	
Programming language	
• LAD	Yes
• FBD	Yes
• STL	Yes
• SCL	Yes
• GRAPH	Yes
• HiGraph®	Yes
Instruction set	See instruction list
• Nesting levels	8
Know-how protection	
• User program/password security	Yes
• Block encryption	Yes, using S7-Block Privacy
System functions (SFC)	See instruction list
System function blocks (SFB)	See instruction list
Integrated inputs/outputs	
Default addresses of the integrated	
• Digital inputs	124.0 to 125.1
• Digital outputs	124.0 to 124.5
Integrated functions	
• Number of counters	2 (see the Manual *Technological Functions*)
• Number of frequency meters	2 channels up to 10 kHz (see the Manual *Technological Functions*)
• Number of pulse outputs	2 pulse width modulations up to 2.5 kHz (see the Manual *Technological Functions*)
• Period measurement	2 channels (see the Manual *Technological Functions*)
• Open-loop positioning	No

Technical specifications	
• Integrated function blocks (rules)	No
Dimensions	
• Mounting dimensions W x H x D (mm)	80 x 125 x 130
• Weight	410 g
Voltages and currents	
• Power supply (rated value)	24 V DC
• Low limit of admissible range (DC)	19.2 V
• High limit of admissible range (DC)	28.8 V
• Current consumption (open-circuit), typically	90 mA
• Inrush current, typ.	5 A
• Current consumption (rated value)	570 mA
• I^2t	0.7 A^2s
• External protection of power supply lines (recommended)	MCB type C min. 2 A, MCB type B min. 4 A
• Power loss, typically	8 W

Reference

In the chapter *Technical specifications of the integrated I/O* you can find:

- the technical specifications of integrated I/Os under *Digital inputs of CPUs 31xC* and *Digital outputs of CPUs 31xC*.
- the block diagrams of the integrated I/Os under *Arrangement and use of integrated I/Os*.

8.3 CPU 313C

Technical specifications

Table 8- 4 Technical specifications of CPU 313C

Technical specifications	
CPU and version	
• MLFB	6ES7313-5BG04-0AB0
• Hardware version	01
• Firmware version	V3.3
• Associated programming package	STEP 7 as of V5.5 + SP1 or STEP 7 as of V5.3 + SP2 with HSP 203
Memory	
Main memory	
• Integrated	128 KB
• Expandable	No
• Maximum size of non-volatile memory for retentive data blocks	64 KB
Load memory	
• Pluggable (MMC)	Yes
• Pluggable (MMC), max.	8 MB
• Data retention on the Micro Memory Card (after the last programming action), min.	10 years
Backup	
• Available	Yes (ensured with Micro Memory Card - maintenance-free)
• Without battery	Yes (program and data)
Execution times	
• For bit operation, min.	0.07 µs
• For word operations, min.	0.15 µs
• For fixed-point arithmetic, min.	0.2 µs
• Minimum for floating-point arithmetic	0.72 µs
Timers/counters and their retentivity	
S7 counters	
• Number	256
Retentivity	
• Configurable	Yes
• Default	Z 0 to Z 7

Technical specifications	
Counting range	
• Low limit	0
• High limit	999
IEC counter	
• Available	Yes
• Type	SFB
• Number	Unlimited (limited only by main memory size)
S7 timers	
• Number	256
Retentivity	
• Configurable	Yes
• Default	No retentivity
Time setting range	
• Low limit	10 ms
• High limit	9990 s
IEC timer	
• Available	Yes
• Type	SFB
• Number	Unlimited (limited only by main memory size)
Data areas and their retentivity	
Bit memory	
• Number, max.	256 bytes
• Retentivity, available	Yes (from MB 0 to MB 255)
• Retentivity, default	From MB 0 to MB 15
• Number of clock memories	8 (1 memory byte)
Data blocks	
• Number, max.	Max. 1024 (In the number range 1 to 16000)
• Size, max.	64 KB
• Retentivity, configurable	Yes, via non-retain feature on the DB
• Retentivity, default	Yes
Local data	
• Per priority class, max.	32 KB, max. 2048 bytes per block
Blocks	

Technical specifications	
• Number of blocks (total)	1024 (DBs, FCs, FBs) The maximum number of blocks that can be loaded may be reduced due to the Micro Memory Card you are using.
OB	See instruction list
• Size, max.	64 KB
• Number of free cycle OBs	1 (OB 1)
• Number of time-of-day interrupt OBs	1 (OB 10)
• Number of time-delay interrupt OBs	2 (OB 20, 21)
• Number of cyclic interrupt OBs	4 (OB 32, 33, 34, 35)
• Number of hardware interrupt OBs	1 (OB 40)
• Number of restart OBs	1 (OB 100)
• Number of asynchronous error OBs	4 (OB 80, 82, 85, 87)
• Number of synchronous error OBs	2 (OB 121, 122)
Nesting depth	
• Per priority class	16
• Additionally within an error OB	4
FB	See instruction list
• Number, max.	1024 (in the number range 0 to 7999)
• Size	64 KB
FC	See instruction list
• Number, max.	1024 (in the number range 0 to 7999)
• Size	64 KB
Address ranges (inputs/outputs)	
I/O address area	
• Inputs	1024 bytes (freely addressable)
• Outputs	1024 bytes (freely addressable)
I/O process image	
• Inputs	1024 bytes
• Outputs	1024 bytes
• Inputs, adjustable	1024 bytes
• Outputs, adjustable	1024 bytes
• Inputs, preset	128 bytes
• Outputs, preset	128 bytes
Digital channels	

Technical specifications	
• Integrated channels (DI)	24
• Integrated channels (DO)	16
• Inputs	1016
• Outputs	1008
• Inputs, of those central	1016
• Outputs, of those central	1008
Analog channels	
• Integrated channels (AI)	5 (4 x current/voltage, 1 x resistance)
• Integrated channels (AO)	2
• Inputs	253
• Outputs	250
• Inputs, of those central	253
• Outputs, of those central	250
Hardware configuration	
• Racks, max.	4
• Modules per rack, max.	8; max. 7 in rack ER 3
Number of DP masters	
• Integrated	-
• Via CP	4
Number of usable FMs and CPs (recommended)	
• FM	8
• CP, point-to-point	8
• CP, LAN	6
Time	
Clock	
• Hardware clock (real-time)	Yes
• Buffered, can be synchronized	Yes
• Factory setting	DT#1994-01-01-00:00:00
• Buffered period	Typically 6 weeks (at an ambient temperature of 40 °C)
• Behavior of the real-time clock after POWER ON	The clock continues running after POWER OFF
• Behavior of the clock on expiration of the buffered period	The clock continues at the time of day it had when power was switched off.
• Deviation per day, max.	10 s, typ.: 2 s

Technical specifications	
Runtime meter	
• Number	1
• Number/number range	0
• Range of values	0 to 2^{31} hours (if SFC 101 is used)
• Granularity	1 hour
• Retentive	Yes; must be manually restarted after every restart
Clock synchronization	
• Supported	Yes
• On MPI, master	Yes
• On MPI, slave	Yes
• On the AS, master	Yes
• On the AS, slave	No
S7 signaling functions	
• Number of stations that can be logged on for signaling functions, max.	8 (depends on the number of connections configured for PG/OP and S7 basic communication)
• Process error diagnostic messages	Yes
• Simultaneously enabled interrupt S blocks, max.	300
Test and startup functions	
Status/modify	
• Status/modify variable	Yes
• Variables	Inputs, outputs, bit memories, DBs, timers, counters
• Maximum number of variables	30
• Status variables, max.	30
• Modify variables, max.	14
Forcing	
• Forcing	Yes
• Variables	Inputs, outputs
• Maximum number of tags	10
Status block	Yes, up to 2 at the same time
Single step	Yes
• Number of breakpoints	4

Technical specifications	
Diagnostic buffer	
• Available	Yes
• Maximum number of entries	500
• Configurable	No
• of which are power-failure-proof	100; only the last 100 entries are retentive
• Maximum number of entries that can be read in RUN	499
• Number of entries that can be set in RUN	Yes, from 10 to 499
• Number of preset entries in RUN	10
Service data	
• Can be read out	Yes
Monitoring function	
• Status LEDs	Yes
Communication functions	
PG/OP communication	Yes
Prioritized OCM communication	
• Supported	No
Routing	No
• Number of routing connections	0
• Data record routing	No
Global data communication	
• Supported	Yes
• Number of GD circles, max.	8
• Number of GD packets, max.	8
• Number of GD packets, sender, max.	8
• Number of GD packets, receiver, max.	8
• Size of GD packets, max.	22 bytes
• Size of GD packets, of those consistent, max.	22 bytes
S7 basic communication	
• Supported	Yes
• User data per job, max.	76 bytes
• User data per job, consistent, max.	76 bytes (for X_SEND or X_RCV) 64 bytes (for X_PUT or X_GET as the server)
S7 communication	
• Supported	Yes
• As server	Yes

Technical specifications	
• As client	Yes (via CP and loadable FBs)
• User data per job, max.	180 bytes (with PUT/GET)
• User data per job, consistent	240 bytes (as server)
S5-compatible communication	
• Supported	Yes (via CP and loadable FCs)
Number of connections	
• Total	8
Suitable for PG communication	7
• PG communication, reserved	1
• PG communication, configurable, min.	1
• PG communication, configurable, max.	7
Suitable for OP communication	7
• OP communication, reserved	1
• OP communication, configurable, min.	1
• OP communication, configurable, max.	7
Suitable for S7 basic communication	4
• S7 basic communication, reserved	0
• S7 basic communication, configurable, min.	0
• S7 basic communication, configurable, max.	4
Connection system	
• Required front connector	2 X 40-pin
Interfaces	
1st interface	
Interface designation	X1
Type of interface	Integrated RS 485 interface
Hardware	RS 485
• electrically disconnected	No
• Interface power supply (15 V DC to 30 V DC), max.	200 mA
Functionality	
• MPI	Yes
• DP master	No
• DP slave	No
• Point-to-point connection	No

Technical specifications	
MPI	
Services	
• PG/OP communication	Yes
• Routing	No
• Global data communication	Yes
• S7 basic communication	Yes
• S7 communication	Yes (only server; connection configured at one end)
• S7 communication, as client	No (but via CP and loadable FBs)
• S7 communication, as server	Yes
Transmission rate, max.	187.5 kbps
Programming	
Programming language	
• LAD	Yes
• FBD	Yes
• STL	Yes
• SCL	Yes
• CFC	Yes
• GRAPH	Yes
• HiGraph®	Yes
Instruction set	See instruction list
• Nesting levels	8
Know-how protection	
• User program/password security	Yes
• Block encryption	Yes, using S7-Block Privacy
System functions (SFC)	See instruction list
System function blocks (SFB)	See instruction list
Integrated inputs/outputs	
Default addresses of the integrated	
Digital inputs	124.0 to 126.7
Digital outputs	124.0 to 125.7
Analog inputs	752 to 761
Analog outputs	752 to 755

Technical specifications	
Integrated functions	
• Number of counters	3 (see the manual *Technological Functions*)
• Number of frequency meters	3 up to 30 kHz (see the manual *Technological Functions*)
• Number of pulse outputs	3 channels for pulse width modulation up to 2.5 kHz (see the manual *Technological Functions*)
• Period measurement	3 channels (see the manual *Technological Functions*)
• Open-loop positioning	No
• Integrated function blocks (rules)	Yes, PID controller (see Manual *Technological Functions*)
Dimensions	
• Mounting dimensions W x H x D (mm)	120 x 125 x 130
• Weight	660 g
Voltages and currents	
• Power supply (rated value)	24 V DC
• Low limit of admissible range (DC)	19.2 V
• High limit of admissible range (DC)	28.8 V
• Current consumption (open-circuit), typically	150 mA
• Inrush current, typ.	5 A
• Current consumption (rated value)	650 mA
• I^2t	0.7 A^2s
• External protection of power supply lines (recommended)	MCB type C min. 2 A, MCB type B min. 4 A
• Power loss, typically	12 W

Reference

In the chapter *Technical specifications of the integrated I/O* you can find:

- the technical specifications of the integrated I/Os under *Digital inputs of CPUs 31xC*, *Digital outputs of CPUs 31xC, Analog inputs of CPUs 31xC* and *Analog outputs of CPUs 31xC*.
- the block diagrams of the integrated I/Os under *Arrangement and use of integrated I/Os*.

8.4 CPU 313C-2 PtP and CPU 313C-2 DP

Technical specifications

Table 8- 5 Technical specifications of the CPU 313C-2 PtP/ CPU 313C-2 DP

Technical specifications		
	CPU 313C-2 PtP	CPU 313C-2 DP
CPU and version	CPU 313C-2 PtP	CPU 313C-2 DP
• MLFB	6ES7313-6BG04-0AB0	6ES7313-6CG04-0AB0
• Hardware version	01	01
• Firmware version	V3.3	V3.3
• Associated programming package	STEP 7 as of V5.5 + SP1 or STEP 7 as of V5.3 + SP2 with HSP 204	STEP 7 as of V5.5 + SP1 or STEP 7 as of V5.3 + SP2 with HSP 203
Memory	CPU 313C-2 PtP	CPU 313C-2 DP
Main memory		
• Integrated	128 KB	
• Expandable	No	
• Maximum size of non-volatile memory for retentive data blocks	64 KB	
Load memory		
• Pluggable (MMC)	Yes	
• Pluggable (MMC), max.	8 MB	
• Data retention on the Micro Memory Card (after the last programming action), min.	10 years	
Backup		
• Available	Yes (ensured with Micro Memory Card - maintenance-free)	
• Without battery	Yes (program and data)	
Execution times	CPU 313C-2 PtP	CPU 313C-2 DP
• For bit operation, min.	0.07 µs	
• For word operations, min.	0.15 µs	
• For fixed-point arithmetic, min.	0.2 µs	
• Minimum for floating-point arithmetic	0.72 µs	
Timers/counters and their retentivity	CPU 313C-2 PtP	CPU 313C-2 DP
S7 counters		
• Number	256	

Technical specifications		
	CPU 313C-2 PtP	CPU 313C-2 DP
Retentivity		
• Configurable	Yes	
• Default	From C 0 to C 7	
Counting range		
• Low limit	0	
• High limit	999	
IEC counter		
• Available	Yes	
• Type	SFB	
• Number	Unlimited (limited only by main memory size)	
S7 timers		
• Number	256	
Retentivity		
• Configurable	Yes	
• Default	No retentivity	
Time setting range		
• Low limit	10 ms	
• High limit	9990 s	
IEC timer		
• Available	Yes	
• Type	SFB	
• Number	Unlimited (limited only by main memory size)	
Data areas and their retentivity	CPU 313C-2 PtP	CPU 313C-2 DP
Bit memory		
• Number, max.	256 bytes	
• Retentivity, available	Yes (MB 0 to MB 255)	
• Retentivity, default	MB 0 to MB15	
• Number of clock memories	8 (1 memory byte)	
Data blocks		
• Number, max.	1024 (in the number range 1 to 16000)	
• Size, max.	64 KB	
• Retentivity, configurable	Yes, via non-retain feature on the DB	
• Retentivity, default	Yes	

Technical specifications		
	CPU 313C-2 PtP	CPU 313C-2 DP
Local data		
• Per priority class, max.	32 kByte, Max. 2048 bytes per block	
Blocks	CPU 313C-2 PtP	CPU 313C-2 DP
• Number of blocks (total)	1024 (DBs, FCs, FBs) The maximum number of blocks that can be loaded may be reduced due to the Micro Memory Card you are using.	
OB	See instruction list	
• Size, max.	64 KB	
• Number of free cycle OBs	1 (OB 1)	
• Number of time-of-day interrupt OBs	1 (OB 10)	
• Number of time-delay interrupt OBs	2 (OB 20, 21)	
• Number of cyclic interrupt OBs	4 (OB 32, 33, 34, 35)	
• Number of hardware interrupt OBs	1 (OB 40)	
• Number of DPV1 interrupt OBs	-	3 (OB 55, 56, 57)
• Number of restart OBs	1 (OB 100)	
• Number of asynchronous error OBs	4 (OB 80, 82, 85, 87)	5 (OB 80, 82, 85, 86, 87)
• Number of synchronous error OBs	2 (OB 121, 122)	
Nesting depth		
• Per priority class	16	
• Additionally within an error OB	4	
FB	See instruction list	
• Number, max.	1024 (in the number range 0 to 7999)	
• Size	64 KB	
FC	See instruction list	
• Number, max.	1024 (in the number range 0 to 7999)	
• Size	64 KB	
Address ranges (inputs/outputs)	CPU 313C-2 PtP	CPU 313C-2 DP
I/O address area		
• Inputs	1024 bytes	2048 bytes
• Outputs	1024 bytes	2048 bytes
Distributed		
• Inputs	-	2030 bytes
• Outputs	-	2030 bytes

Technical specifications		
	CPU 313C-2 PtP	CPU 313C-2 DP
I/O process image		
• Inputs	1024 bytes	2048 bytes
• Outputs	1024 bytes	2048 bytes
• Inputs, adjustable	1024 bytes	2048 bytes
• Outputs, adjustable	1024 bytes	2048 bytes
• Inputs, preset	128 bytes	128 bytes
• Outputs, preset	128 bytes	128 bytes
Digital channels		
• Integrated channels (DI)	16	
• Integrated channels (DO)	16	
• Inputs	1008	16256
• Outputs	1008	16256
• Inputs, of those central	1008	1008
• Outputs, of those central	1008	1008
Analog channels		
• Integrated channels	-	-
• Integrated channels	-	-
• Inputs	248	1015
• Outputs	248	1015
• Inputs, of those central	248	248
• Outputs, of those central	248	248
Hardware configuration	CPU 313C-2 PtP	CPU 313C-2 DP
• Racks, max.	4	
• Modules per rack, max.	8; max. 7 in rack ER 3	
Number of DP masters		
• Integrated	No	1
• Via CP	4	4
Number of usable FMs and CPs (recommended)		
• FM	8	
• CP, point-to-point	8	
• CP, LAN	6	

Technical specifications		
	CPU 313C-2 PtP	CPU 313C-2 DP
Time	**CPU 313C-2 PtP**	**CPU 313C-2 DP**
Clock		
• Hardware clock (real-time)	Yes	
• Buffered, can be synchronized	Yes	
• Factory setting	DT#1994-01-01-00:00:00	
• Buffered period	Typically 6 weeks (at an ambient temperature of 40 °C)	
• Behavior of the real-time clock after POWER ON	The clock continues running after POWER OFF	
• Behavior after expiration of the buffered period	The clock continues at the time of day it had when power was switched off.	
• Deviation per day, max.	10 s, typ.: 2 s	
Runtime meter		
• Number	1	
• Number/number range	0	
• Range of values	0 to 2^{31} hours (using the SFC 101)	
• Granularity	1 hour	
• Retentive	Yes; must be manually restarted after every restart	
Clock synchronization		
• Supported	Yes	
• On MPI, master	Yes	Yes
• On MPI, slave	Yes	Yes
• On DP, master	-	Yes, DP slave must be time slave
• On DP, slave	-	Yes
• On the AS, master	Yes	Yes
• On the AS, slave	No	No
S7 signaling functions	**CPU 313C-2 PtP**	**CPU 313C-2 DP**
• Number of stations that can be logged on for signaling functions (e.g. OS)	8	
• Process error diagnostic messages	Yes	
• Simultaneously enabled interrupt S blocks, max.	300	

Technical specifications		
	CPU 313C-2 PtP	CPU 313C-2 DP
Test and startup functions	**CPU 313C-2 PtP**	**CPU 313C-2 DP**
Status/modify		
• Status/modify variable	Yes	
• Variable	Inputs, outputs, bit memories, DBs, timers, counters	
• Maximum number of variables	30	
• Status variables, max.	30	
• Modify variables, max.	14	
Forcing		
• Forcing	Yes	
• Variables	Inputs, outputs	
• Maximum number of tags	10	
Status block	Yes, up to 2 at the same time	
Single step	Yes	
• Number of breakpoints	4	
Diagnostic buffer		
• Available	Yes	
• Maximum number of entries (not configurable)	500	
• Configurable	No	
• Of which are power-failure-proof	100, only the last 100 entries are retentive	
• Maximum number of entries that can be read in RUN	499	
• Number of entries that can be set in RUN	Yes, from 10 to 499	
• Number of preset entries in RUN	10	
Service data		
• Can be read out	Yes	
Monitoring functions	**CPU 313C-2 PtP**	**CPU 313C-2 DP**
• Status LEDs	Yes	
Communication functions	**CPU 313C-2 PtP**	**CPU 313C-2 DP**
PG/OP communication	Yes	Yes
Prioritized OCM communication		
• Supported	No	
Routing	No	Yes
• Number of routing connections	-	Max. 4
• Data record routing	No	Yes

Technical specifications		
	CPU 313C-2 PtP	CPU 313C-2 DP
Global data communication		
• Supported	Yes	
• Number of GD circles, max.	8	
• Number of GD packets, max.	8	
• Number of GD packets, sender, max.	8	
• Number of GD packets, receiver, max.	8	
• Size of GD packets, max.	22 bytes	
• Size of GD packets, of those consistent, max.	22 bytes	
S7 basic communication		
• Supported	Yes	
• User data per job, max.	76 bytes	
• User data per job, consistent, max.	76 bytes (for X_SEND or X_RCV) 64 bytes (for X_PUT or X_GET as the server)	
S7 communication		
• Supported	Yes	
• As server	Yes	
• As client	Yes, via CP and loadable FBs	
• User data per job, max.	180 bytes for PUT/GET	
• User data per job, consistent, max.	240 bytes (as server)	
S5-compatible communication		
• Supported	Yes, via CP and loadable FCs	
Number of connections		
• Total	8	
Suitable for PG communication	7	
• PG communication, reserved	1	
• PG communication, configurable, min.	1	
• PG communication, configurable, max.	7	
Suitable for OP communication	7	
• OP communication, reserved	1	
• OP communication, configurable, min.	1	
• OP communication, configurable, max.	7	

Technical specifications		
	CPU 313C-2 PtP	CPU 313C-2 DP
Suitable for S7 basic communication	4	
• S7 basic communication, reserved	0	
• S7 basic communication, configurable, min.	0	
• S7 basic communication, configurable, max.	4	
Connection system		
• Required front connector	1 X 40-pin	
Interfaces	CPU 313C-2 PtP	CPU 313C-2 DP
1st interface		
Interface designation	X1	
Type of interface	Integrated RS 485 interface	
Hardware	RS 485	
• electrically disconnected	No	
• Interface power supply (15 V DC to 30 V DC), max.	200 mA	
Functionality		
• MPI	Yes	
• DP master	No	
• DP slave	No	
• Point-to-point connection	No	
MPI		
Services		
• PG/OP communication	Yes	
• Routing	No	Yes
• Global data communication	Yes	
• S7 basic communication	Yes	
• S7 communication	Yes (only server; connection configured at one end)	
• S7 communication, as client	No (but via CP and loadable FBs)	
• S7 communication, as server	Yes	
Transmission rate, max.	187.5 kbps	

Technical specifications		
	CPU 313C-2 PtP	CPU 313C-2 DP
2nd interface		
Interface designation	X2	
Type of interface	Integrated RS 422/485 interface	Integrated RS 485 interface
Hardware	RS 422/485	RS 485
• electrically disconnected	Yes	Yes
• Interface power supply (15 V DC to 30 V DC), max.	No	200 mA
Functionality		
• MPI	No	No
• DP master	No	Yes
• DP slave	No	Yes
• PROFINET IO controller	No	No
• PROFINET IO device	No	No
• PROFINET CBA	No	No
• Point-to-point connection	Yes	No
DP master		
Services		
• PG/OP communication	-	Yes
• Routing	-	Yes
• Global data communication	-	No
• S7 basic communication	-	Yes (intelligent blocks only)
• S7 communication	-	Yes (only server; connection configured at one end)
• S7 communication, as client	-	No
• S7 communication, as server	-	Yes
• Constant bus cycle time supported	-	Yes
• Isochronous mode	-	No
• SYNC/FREEZE	-	Yes
• Activate/deactivate DP slaves – Max. number of DP slaves that can be enabled / disabled simultaneously	-	Yes 8
• Direct data exchange (cross-traffic)	-	Yes, as subscriber
• DPV1	-	Yes
Transmission rate, max.	-	Up to 12 mbps

Technical specifications		
	CPU 313C-2 PtP	CPU 313C-2 DP
Number of DP slaves, max.	-	124
Address range		
• Inputs, max.	-	2 KB
• Outputs, max.	-	2 KB
User data per DP slave		
• Inputs, max.	-	244 bytes
• Outputs, max.	-	244 bytes
DP slave		
Services		
• PG/OP communication	-	Yes
• Routing	-	Yes (only if interface is active)
• Global data communication	-	No
• S7 basic communication	-	No
• S7 communication	-	Yes (only server; connection configured at one end)
• S7 communication, as client	-	No
• S7 communication, as server	-	Yes
• Direct data exchange (cross-traffic)	-	Yes
• DPV1	-	No
Transmission rate, max.	-	12 mbps
Automatic baud rate detection	-	Yes (only if interface is passive)
GSD file	-	The current GSD file is available for download at GSD file (http://www.siemens.com/profibus-gsd)
Transfer memory		
• Inputs, max.	-	244 bytes
• Outputs, max.	-	244 bytes
• Address areas, max.	-	32
• User data per address range, max.	-	32 bytes

Technical specifications		
	CPU 313C-2 PtP	CPU 313C-2 DP
Point-to-point connection		
• Transmission rates	38.4kbps half duplex 19.2 kbps full duplex	-
• Max. cable length	1200 m	-
• The user program can control the interface	Yes	-
• The interface can trigger an alarm or interrupt in the user program	Yes (message with break ID)	-
• Protocol driver	3964 (R); ASCII	-
Programming	CPU 313C-2 PtP	CPU 313C-2 DP
Programming language		
• LAD	Yes	
• FBD	Yes	
• STL	Yes	
• SCL	Yes	
• CFC	Yes	
• GRAPH	Yes	
• HiGraph®	Yes	
Instruction set	See instruction list	
• Nesting levels	8	
Know-how protection		
• User program/ password security	Yes	
• Block encryption	Yes, using S7-Block Privacy	
System functions (SFC)	See instruction list	
System function blocks (SFB)	See instruction list	
Integrated inputs/outputs	CPU 313C-2 PtP	CPU 313C-2 DP
Default addresses of the integrated		
Digital inputs	124.0 to 125.7	
Digital outputs	124.0 to 125.7	

Technical specifications		
	CPU 313C-2 PtP	CPU 313C-2 DP
Integrated functions		
• Number of counters	3 (see the manual *Technological Functions*)	
• Number of frequency meters	3 channels up to 30 kHz (see the manual *Technological Functions*)	
• Number of pulse outputs	3, pulse width modulations up to 2.5 kHz (see the manual *Technological Functions*)	
• Period measurement	3 channels (see the manual *Technological Functions*)	
• Open-loop positioning	No	
• Integrated function blocks (rules)	PID controller (see the manual *Technological Functions*)	
Dimensions	CPU 313C-2 PtP	CPU 313C-2 DP
• Mounting dimensions W x H x D (mm)	80 x 125 x 130	
• Weight, approx.	500 g	
Voltages and currents	CPU 313C-2 PtP	CPU 313C-2 DP
• Power supply (rated value)	24 V DC	
• Low limit of admissible range (DC)	19.2 V	
• High limit of admissible range (DC)	28.8 V	
• Current consumption (open-circuit), typically	110 mA	
• Inrush current, typ.	5 A	
• Current consumption (rated value)	580 mA	800 mA
• I^2t	0.7 A^2s	
• External protection of power supply lines (recommended)	MCB type C: Min. 2 A MCB Type B: Min. 4 A	
• Power loss, typically	9 W	

Reference

In the chapter *Technical specifications of the integrated I/O* you can find:

- the technical specifications of integrated I/Os under *Digital inputs of CPUs 31xC* and *Digital outputs of CPUs 31xC*.
- the block diagrams of the integrated I/Os under *Arrangement and use of integrated I/Os*.

8.5 CPU 314C-2 PtP and CPU 314C-2 DP

Technical specifications

Table 8- 6 Technical specifications of CPU 314C-2 PtP and CPU 314C-2 DP

Technical specifications		
	CPU 314C-2 PtP	CPU 314C-2 DP
CPU and version	CPU 314C-2 PtP	CPU 314C-2 DP
• MLFB	6ES7314-6BH04-0AB0	6ES7314-6CH04-0AB0
• Hardware version	01	01
• Firmware version	V3.3	V3.3
• Associated programming package	STEP 7 as of V5.5 + SP1 or STEP 7 as of V5.3 + SP2 with HSP 204	STEP 7 as of V5.5 + SP1 or STEP 7 as of V5.3 + SP2 with HSP 203
Memory	CPU 314C-2 PtP	CPU 314C-2 DP
Main memory		
• Integrated	192 KB	
• Expandable	No	
• Maximum size of non-volatile memory for retentive data blocks	64 KB	
Load memory		
• Pluggable (MMC)	Yes	
• Pluggable (MMC), max.	8 MB	
• Data retention on the Micro Memory Card (after the last programming action), min.	10 years	
Backup		
• Available	Yes (ensured with SIMATIC Micro Memory Card - maintenance-free)	
• Without battery	Yes (program and data)	
Execution times	CPU 314C-2 PtP	CPU 314C-2 DP
• For bit operation, min.	0.06 µs	
• For word operations, min.	0.12 µs	
• For fixed-point arithmetic, min.	0.16 µs	
• Minimum for floating-point arithmetic	0.59 µs	

Technical specifications		
	CPU 314C-2 PtP	CPU 314C-2 DP
Timers/counters and their retentivity	CPU 314C-2 PtP	CPU 314C-2 DP
S7 counters		
• Number	256	
Retentivity		
• Configurable	Yes	
• Default	From C 0 to C 7	
Counting range		
• Low limit	0	
• High limit	999	
IEC counter		
• Available	Yes	
• Type	SFB	
• Number	Unlimited (limited only by main memory size)	
S7 timers		
• Number	256	
Retentivity		
• Configurable	Yes	
• Default	No retentivity	
Time setting range		
• Low limit	10 ms	
• High limit	9990 s	
IEC timer		
• Available	Yes	
• Type	SFB	
• Number	Unlimited (limited only by main memory size)	
Data areas and their retentivity	CPU 314C-2 PtP	CPU 314C-2 DP
Bit memory		
• Number, max.	256 bytes	
• Retentivity, available	Yes (MB 0 to MB 255)	
• Retentivity, default	MB 0 to MB 15	
• Number of clock memories	8 (1 memory byte)	

Technical specifications		
	CPU 314C-2 PtP	CPU 314C-2 DP
Data blocks		
• Number, max.	1024 (in the number range 1 to 16000)	
• Size, max.	64 KB	
• Retentivity, configurable	Yes, via non-retain feature on the DB	
• Retentivity, default	Yes	
Local data		
• Per priority class, max.	32 KB, max. 2048 bytes per block	
Blocks	CPU 314C-2 PtP	CPU 314C-2 DP
• Number of blocks (total)	1024 (DBs, FCs, FBs) The maximum number of blocks that can be loaded may be reduced if you are using another MMC.	
OB	See instruction list	
• Size, max.	64 KB	
• Number of free cycle OBs	1 (OB 1)	
• Number of time-of-day interrupt OBs	1 (OB 10)	
• Number of time-delay interrupt OBs	2 (OB 20, 21)	
• Number of cyclic interrupt OBs	4 (OB 32, 33, 34, 35)	
• Number of hardware interrupt OBs	1 (OB 40)	
• Number of DPV1 interrupt OBs	-	3 (OB 55, 56, 57)
• Number of restart OBs	1 (OB 100)	
• Number of asynchronous error OBs	4 (OB 80, 82, 85, 87)	5 (OB 80, 82, 85, 86, 87)
• Number of synchronous error OBs	2 (OB 121, 122)	
Nesting depth		
• Per priority class	16	
• Additionally within an error OB	4	
FB	See instruction list	
• Number, max.	1024 (in the number range 0 to 7999)	
• Size	64 KB	
FC	See instruction list	
• Number, max.	1024 (in the number range 0 to 7999)	
• Size	64 KB	

Technical specifications		
	CPU 314C-2 PtP	CPU 314C-2 DP
Address ranges (inputs/outputs)	CPU 314C-2 PtP	CPU 314C-2 DP
I/O address area		
• Inputs	1024 bytes (freely addressable)	2048 bytes (freely addressable)
• Outputs	1024 bytes (freely addressable)	2048 bytes (freely addressable)
Distributed		
• Inputs	-	2003 bytes
• Outputs	-	2010 bytes
I/O process image		
• Inputs	1024 bytes	2048 bytes
• Outputs	1024 bytes	2048 bytes
• Inputs, adjustable	1024 bytes	2048 bytes
• Outputs, adjustable	1024 bytes	2048 bytes
• Inputs, preset	128 bytes	
• Outputs, preset	128 bytes	
Digital channels		
• Integrated channels (DI)	24	
• Integrated channels (DO)	16	
• Inputs	1016	16048
• Outputs	1008	16096
• Inputs, of those central	1016	
• Outputs, of those central	1008	
Analog channels		
• Integrated channels (AI)	5 (4 x current/voltage, 1 x resistance)	
• Integrated channels (AO)	2	
• Inputs	253	1006
• Outputs	250	1007
• Inputs, of those central	253	
• Outputs, of those central	250	
Hardware configuration	CPU 314C-2 PtP	CPU 314C-2 DP
• Racks, max.	4	
• Modules per rack, max.	8; max. 7 in rack ER 3	

Technical specifications		
	CPU 314C-2 PtP	CPU 314C-2 DP
Number of DP masters		
• Integrated	-	1
• Via CP	4	4
Number of usable FMs and CPs (recommended)		
• FM	8	
• CP, point-to-point	8	
• CP, LAN	10	
Time	**CPU 314C-2 PtP**	**CPU 314C-2 DP**
Clock		
• Hardware clock (real-time)	Yes	
• Buffered, can be synchronized	Yes	
• Factory setting	DT#1994-01-01-00:00:00	
• Buffered period	Typically 6 weeks (at an ambient temperature of 40 °C)	
• Behavior of the real-time clock after POWER ON	The clock continues running after POWER OFF	
• Behavior after expiration of the buffered period	The clock continues at the time of day it had when power was switched off.	
• Daily deviation	10 s, typ.: 2 s	
Runtime meter		
• Number	1	
• Number/number range	0	
• Range of values	0 to 2^{31} hours (if SFC 101 is used)	
• Granularity	1 hour	
• Retentive	Yes; must be manually restarted after every restart	
Clock synchronization		
• Supported	Yes	
• On MPI, master	Yes	
• On MPI, slave	Yes	
• On the AS, master	Yes	
• On the AS, slave	No	
• On DP, master	-	Yes, DP slave must be time slave
• On DP, slave	-	Yes

Technical specifications		
	CPU 314C-2 PtP	CPU 314C-2 DP
S7 signaling functions	**CPU 314C-2 PtP**	**CPU 314C-2 DP**
• Number of stations that can be logged on for signaling functions (e.g. OS)	12 (depends on the number of connections configured for PG/OP and S7 basic communication)	
• Process error diagnostic messages	Yes	
• Simultaneously enabled interrupt S blocks, max.	300	
Test and startup functions	**CPU 314C-2 PtP**	**CPU 314C-2 DP**
Status/modify		
• Status/modify variable	Yes	
• Variables	Inputs, outputs, bit memories, DBs, timers, counters	
• Maximum number of variables	30	
• Status variables, max.	30	
• Modify variables, max.	14	
Forcing		
• Forcing	Yes	
• Variables	Inputs, outputs	
• Maximum number of tags	10	
Status block	Yes, up to 2 at the same time	
Single step	Yes	
• Number of breakpoints	4	
Diagnostic buffer		
• Available	Yes	
• Maximum number of entries	500	
• Configurable	No	
• Of which are power-failure-proof	100, only the last 100 entries are retentive	
• Maximum number of entries that can be read in RUN	499	
• Number of entries that can be set in RUN	Yes, from 10 to 499	
• Number of preset entries in RUN	10	
Service data		
• Can be read out	Yes	
Monitoring function		
• Status LEDs	Yes	

Technical specifications		
	CPU 314C-2 PtP	CPU 314C-2 DP
Communication functions	**CPU 314C-2 PtP**	**CPU 314C-2 DP**
PG/OP communication	Yes	
Prioritized OCM communication		
• Supported	No	
Routing	No	Yes
• Number of routing connections	-	Max. 4
• Data record routing	No	Yes
Global data communication		
• Supported	Yes	
• Number of GD circles, max.	8	
• Number of GD packets, max.	8	
• Number of GD packets, sender, max.	8	
• Number of GD packets, receiver, max.	8	
• Number of GD packets, max.	22 bytes	
• Size of GD packets, of those consistent, max.	22 bytes	
S7 basic communication		
• Supported	Yes	
• User data per job, max.	76 bytes	
• User data per job, consistent, max.	76 bytes (for X_SEND or X_RCV) 64 bytes (for X_PUT or X_GET as the server)	
S7 communication		
• Supported	Yes	
• As server	Yes	
• As client	Yes (via CP and loadable FBs)	
• User data per job, max.	180 bytes (with PUT/GET)	
• User data per job, consistent, max.	240 bytes (as server)	
S5-compatible communication		
• Supported	Yes (via CP and loadable FCs)	
Number of connections		
• Total	12	
Suitable for PG communication	11	
• PG communication, reserved	1	
• PG communication, configurable, min.	1	
• PG communication, configurable, max.	11	

Technical specifications		
	CPU 314C-2 PtP	CPU 314C-2 DP
Suitable for OP communication	11	
• OP communication, reserved	1	
• OP communication, configurable, min.	1	
• OP communication, configurable, max.	11	
Suitable for S7 basic communication	8	
• S7 basic communication, reserved	0	
• S7 basic communication, configurable, min.	0	
• S7 basic communication, configurable, max.	8	
Connection system		
• Required front connector	2 X 40-pin	
Interfaces	CPU 314C-2 PtP	CPU 314C-2 DP
1st interface		
Interface designation	X1	
Type of interface	Integrated RS 485 interface	
Hardware	RS 485	
• Electrically isolated	No	
• Interface power supply (15 V DC to 30 V DC), max.	200 mA	
Functionality		
• MPI	Yes	
• DP master	No	
• DP slave	No	
• Point-to-point connection	No	
MPI		
Services		
• PG/OP communication	Yes	
• Routing	No	Yes
• Global data communication	Yes	
• S7 basic communication	Yes	
• S7 communication	Yes (only server; connection configured at one end)	
• S7 communication, as client	No (but via CP and loadable FBs)	
• S7 communication, as server	Yes	
• Transmission rate, max.	187.5 kbps	

Technical specifications		
	CPU 314C-2 PtP	CPU 314C-2 DP
2nd interface	CPU 314C-2 PtP	CPU 314C-2 DP
Interface designation	X2	
Type of interface	Integrated RS 422/485 interface	Integrated RS 485 interface
Hardware	RS 422/485	RS 485
• Electrically isolated	Yes	Yes
• Interface power supply (15 V DC to 30 V DC), max.	No	200 mA
Functionality		
• MPI	No	
• DP master	No	Yes
• DP slave	No	Yes
• PROFINET IO controller	No	
• PROFINET IO device	No	
• PROFINET CBA	No	
• Point-to-point connection	Yes	No
DP master		
Services		
• PG/OP communication	-	Yes
• Routing	-	Yes
• Global data communication	-	No
• S7 basic communication	-	Yes (intelligent blocks only)
• S7 communication	-	Yes (only server; connection configured at one end)
• S7 communication, as client	-	No
• S7 communication, as server	-	Yes
• Constant bus cycle time supported	-	Yes
• Isochronous mode	-	No
• SYNC/FREEZE	-	Yes
• Activate/deactivate DP slaves – Max. number of DP slaves that can be enabled / disabled simultaneously	-	Yes 8
• Direct data exchange (cross-traffic)	-	Yes, as subscriber
• DPV1	-	Yes

Technical specifications		
	CPU 314C-2 PtP	CPU 314C-2 DP
Transmission rate, max.	-	Up to 12 mbps
Number of DP slaves, max.	-	124
Address range		
• Inputs, max.	-	2 KB
• Outputs, max.	-	2 KB
User data per DP slave		
• Inputs, max.	-	244 bytes
• Outputs, max.	-	244 bytes
DP slave		
Services		
• PG/OP communication	-	Yes
• Routing	-	Yes (only if interface is active)
• Global data communication	-	No
• S7 basic communication	-	No
• S7 communication	-	Yes (only server; connection configured at one end)
• S7 communication, as client	-	No
• S7 communication, as server	-	Yes
• Direct data exchange (cross-traffic)	-	Yes
• DPV1	-	No
Transmission rate, max.	-	Up to 12 mbps
Automatic baud rate detection	-	Yes (only if interface is passive)
GSD file	-	The current GSD file is available for download at GSD file (http://www.siemens.com/profibus-gsd)
Transfer memory		
• Inputs, max.	-	244 bytes
• Outputs, max.	-	244 bytes
• Address areas, max.	-	32
• User data per address range, max.	-	32 bytes

Technical specifications		
	CPU 314C-2 PtP	CPU 314C-2 DP
Point-to-point connection		
• Transmission rates	38.4kbps half duplex 19.2kbps full duplex	-
• Max. cable length	1200 m	-
• The user program can control the interface	Yes	-
• The interface can trigger an alarm or interrupt in the user program	Yes (message with break ID)	-
• Protocol driver	3964 (R); ASCII and RK512	-
Programming	CPU 314C-2 PtP	CPU 314C-2 DP
Programming language		
• LAD	Yes	
• FBD	Yes	
• STL	Yes	
• SCL	Yes	
• CFC	Yes	
• GRAPH	Yes	
• HiGraph®	Yes	
Instruction set	See instruction list	
• Nesting levels	8	
Know-how protection		
• User program/ password security	Yes	
• Block encryption	Yes, using S7-Block Privacy	
System functions (SFC)	See instruction list	
System function blocks (SFB)	See instruction list	
Integrated inputs/outputs	CPU 314C-2 PtP	CPU 314C-2 DP
Default addresses of the integrated		
Digital inputs	124.0 to 126.7	
Digital outputs	124.0 to 125.7	
Analog inputs	752 to 761	
Analog outputs	752 to 755	

Technical specifications		
	CPU 314C-2 PtP	CPU 314C-2 DP
Integrated functions		
• Number of counters	4 (see the manual *Technological Functions*)	
• Number of frequency meters	4 channels up to 60 kHz (see the manual *Technological Functions*)	
• Number of pulse outputs	4, pulse width modulations up to 2.5 kHz (see the manual *Technological Functions*)	
• Period measurement	4 channels (see the manual *Technological Functions*)	
• Open-loop positioning	1 channel (see the manual *Technological Functions*)	
• Integrated function blocks (rules)	PID controller (see the manual *Technological Functions*)	
Dimensions	CPU 314C-2 PtP	CPU 314C-2 DP
• Mounting dimensions W x H x D (mm)	• 120 x 125 x 130	
• Weight, approx.	• 680 g	
Voltages and currents	CPU 314C-2 PtP	CPU 314C-2 DP
Power supply (rated value)	24 V DC	
• Low limit of admissible range (DC)	19.2 V	
• High limit of admissible range (DC)	28.8 V	
• Current consumption (open-circuit), typically	150 mA	
• Inrush current, typ.	5 A	
• Current consumption (rated value)	660 mA	880 mA
• I^2t	0.7 A^2s	
• External protection of power supply lines (recommended)	MCB type C min. 2 A, MCB type B min. 4 A	
• Power loss, typically	13 W	

Reference

In the chapter *Technical specifications of the integrated I/O* you can find:

- the technical specifications of integrated I/Os under *Digital inputs of CPUs 31xC* and *Digital outputs of CPUs 31xC*.
- the block diagrams of the integrated I/Os under *Arrangement and use of integrated I/Os*.

8.6 CPU 314C-2 PN/DP

Technical specifications

Table 8- 7 Technical specifications of the CPU 314C-2 PN/DP

Technical specifications	
CPU and version	
• MLFB	6ES7314-6EH04-0AB0
• Hardware version	01
• Firmware version	V3.3
• Associated programming package	STEP 7 as of V5.5 and HSP 191
Memory	
Main memory	
• Integrated	192 KB
• Expandable	No
• Maximum size of non-volatile memory for retentive data blocks	64 KB
Load memory	
• Pluggable (MMC)	Yes
• Pluggable (MMC), max.	8 MB
• Data retention on the Micro Memory Card (after the last programming action), min.	10 years
Backup	
• Available	Yes (ensured with Micro Memory Card - maintenance-free)
• Without battery	Yes (program and data)
Execution times	
• For bit operation, min.	0.06 µs
• For word operations, min.	0.12 µs
• For fixed-point arithmetic, min.	0.16 µs
• Minimum for floating-point arithmetic	0.59 µs
Timers/counters and their retentivity	
S7 counters	
• Number	256
Retentivity	
• Configurable	Yes
• Default	Z 0 to Z 7

Technical specifications	
Counting range	
• Low limit	0
• High limit	999
IEC counter	
• Available	Yes
• Type	SFB
• Number	Unlimited (limited only by main memory size)
S7 timers	
• Number	256
Retentivity	
• Configurable	Yes
• Default	No retentivity
Time setting range	
• Low limit	10 ms
• High limit	9990 s
IEC timer	
• Available	Yes
• Type	SFB
• Number	Unlimited (limited only by main memory size)
Data areas and their retentivity	
Bit memory	
• Number, max.	256 bytes
• Retentivity, available	Yes (from MB 0 to MB 255)
• Retentivity, default	MB 0 to MB 15
• Number of clock memories	8 (1 memory byte)
Data blocks	
• Number, max.	1024 (in the number range 1 to 16000)
• Size, max.	64 KB
• Retentivity, configurable	Yes, via non-retain feature on the DB
• Retentivity, default	Yes
Local data	
• Per priority class, max.	32 KB, max. 2048 KB per block

Technical specifications	
Blocks	
• Number of blocks (total)	1024 (DBs, FCs, FBs) The maximum number of blocks that can be loaded may be reduced due to the Micro Memory Card you are using.
OB	See instruction list
• Size, max.	64 KB
• Number of free cycle OBs	1 (OB 1)
• Number of time-of-day interrupt OBs	1 (OB 10)
• Number of time-delay interrupt OBs	2 (OB 20, 21)
• Number of cyclic interrupt OBs	4 (OB 32, 33, 34, 35)
• Number of hardware interrupt OBs	1 (OB 40)
• Number of DPV1 interrupt OBs	3 (OB 55, 56, 57)
• Number of isochronous interrupt OBs	1 (OB 61), only for PROFINET IO
• Number of restart OBs	1 (OB 100)
• Number of asynchronous error OBs	6 (OB 80, 82, 83, 85, 86, 87) (OB 83 for PROFINET IO)
• Number of synchronous error OBs	2 (OB 121, 122)
Nesting depth	
• Per priority class	16
• Additionally within an error OB	4
FB	See instruction list
• Number, max.	1024 (in the number range 0 to 7999)
• Size	64 KB
FC	See instruction list
• Number, max.	1024 (in the number range 0 to 7999)
• Size	64 KB
Address ranges (inputs/outputs)	
I/O address area	
• Inputs	2048 bytes (freely addressable)
• Outputs	2048 bytes (freely addressable)
Distributed	
• Inputs	2003 bytes
• Outputs	2010 bytes
I/O process image	
• Inputs	2048 bytes

Technical specifications	
• Outputs	2048 bytes
• Inputs, adjustable	2048 bytes
• Outputs, adjustable	2048 bytes
• Inputs, preset	256 bytes
• Outputs, preset	256 bytes
Process image partitions	
• Number of process image partitions	1
• Amount of user data in the process image partition for isochronous PROFINET IO, max.	1600 bytes
Digital channels	
• Integrated channels (DI)	24
• Integrated channels (DO)	16
• Inputs	16048
• Outputs	16096
• Inputs, of those central	1016
• Outputs, of those central	1008
Analog channels	
• Integrated channels (AI)	5 (4 x current/voltage, 1 x resistance)
• Integrated channels (AO)	2
• Inputs	1006
• Outputs	1007
• Inputs, of those central	253
• Outputs, of those central	250
Hardware configuration	
• Racks, max.	4
• Modules per rack, max.	8, max. 7 in rack 3
Number of DP masters	
• Integrated	1
• Via CP	4
Number of usable FMs and CPs (recommended)	
• FM	8
• CP, point-to-point	8
• CP, LAN	10

Technical specifications	
Time	
Clock	
• Hardware clock (real-time)	Yes
• Buffered, can be synchronized	Yes
• Factory setting	DT#1994-01-01-00:00:00
• Buffered period	Typically 6 weeks (at an ambient temperature of 40 °C)
• Behavior of the real-time clock after POWER ON	The clock continues running after POWER OFF.
• Behavior of the clock on expiration of the buffered period	The clock continues at the time of day it had when power was switched off.
• Daily deviation	10 s, typ. 2 s
Runtime meter	
• Number	1
• Number/number range	0
• Range of values	0 to 2^{31} hours (using the SFC 101)
• Granularity	1 hour
• Retentive	Yes; must be manually restarted after every restart
Clock synchronization	
• Supported	Yes
• On the AS, master	Yes
• On the AS, slave	Yes
• On MPI, master	Yes
• On MPI, slave	Yes
• On DP, master	Yes (DP slave must be time slave)
• On DP, slave	Yes
• On Ethernet via NTP	Yes (as client)
S7 signaling functions	
• Number of stations that can be logged on for signaling functions, max.	12 (depends on the number of connections configured for PG/OP and S7 basic communication)
• Process error diagnostic messages	Yes
• Simultaneously enabled interrupt S blocks, max.	300

Technical specifications	
Test and startup functions	
Status/modify	
• Status/modify variable	Yes
• Variables	Inputs, outputs, bit memories, DBs, timers, counters
• Maximum number of variables	30
• Status variables, max.	30
• Modify variables, max.	14
Forcing	
• Forcing	Yes
• Variables	Inputs/outputs
• Maximum number of tags	10
Maximum number of status blocks	Yes, up to 2 at the same time
Single step	Yes
• Number of breakpoints	4
Diagnostic buffer	
• Available	Yes
• No. of entries, max.	500
• Configurable	No
• Of which are power-failure-proof	100, only the last 100 entries are retentive
• Maximum number of entries that can be read in RUN	499
• Number of entries that can be set in RUN	Yes (from 10 to 499)
• Number of preset entries in RUN	10
Service data	
• Can be read out	Yes
Monitoring function	
• Status LEDs	Yes
Communication functions	
PG/OP communication	Yes
Prioritized OCM communication	No
Routing	Yes
• Number of routing connections	X1 as MPI: max. 10; X1 as DP master: max. 24 X1 as DP slave (active): max. 14 X2 as PROFINET: Max. 24
• Data record routing	Yes

Technical specifications	
Global data communication	
• Supported	Yes
• Number of GD circles, max.	8
• Number of GD packages, max.	8
• Number of GD packages, sender, max.	8
• Number of GD packages, receiver, max.	8
• Size of GD packages, max.	22 bytes
• Size of GD packages, of those consistent, max.	22 bytes
S7 basic communication	
• Supported	Yes
• User data per job, max.	76 bytes
• User data per job, consistent, max.	76 Bytes (for X-SEND/REC), 64 bytes (for X-PUT/GET as server)
S7 communication	
• Supported	Yes
• As server	Yes
• As client	Yes (via integrated PN interface and loadable FBs, or via CP and loadable FBs)
• User data per job, max.	See the STEP 7 Online Help, *Common parameters of SFBs/FBs and SFC/FC of the S7 communication)*
S5-compatible communication	
• Supported	Yes (via CP and loadable FCs)
Web server	
• Supported	Yes
• Number of HTTP clients	5
• User-defined web pages	Yes
Open IE communication	
• Supported	Yes
• Number of connections/access points, total	8
• Local port number used at the system end	0, 20, 21, 23, 25, 80, 102, 135, 161, 8080, 34962, 34963, 34964, 65532, 65533, 65535
TCP/IP	Yes (via integrated PROFINET interface and loadable FBs)
• Maximum number of connections	8
• Data length for connection type 01_H, max.	1460 bytes
• Data length for connection type 11_H, max.	32768 bytes

Technical specifications	
• Multiple passive connections per port (multiport), supported	Yes
ISO on TCP (RFC1006)	Yes (via integrated PROFINET interface and loadable FBs)
• Maximum number of connections	8
• Data length, max.	32768 bytes
UDP	Yes (via integrated PROFINET interface and loadable FBs)
• Maximum number of connections	8
• Data length, max.	1472 bytes
iPAR server	
• Supported	Yes
Number of connections	
• Total	12
Suitable for PG communication	11
• PG communication, reserved	1
• PG communication, configurable, min.	1
• PG communication, configurable, max.	11
Suitable for OP communication	11
• OP communication, reserved	1
• OP communication, configurable, min.	1
• OP communication, configurable, max.	11
Suitable for S7 basic communication	8
• S7 basic communication, reserved	0
• S7 basic communication, configurable, min.	0
• S7 basic communication, configurable, max.	8
Suitable for S7 communication	10
• S7 communication, reserved	0
• S7 communication, configurable, min.	0
• S7 communication, configurable, max.	10
Total number of instances, max.	32
PROFINET CBA (with communication load setpoint)	
• Reference setting for CPU communication	50 %
• Number of remote interconnecting partners	32
• Number of master/slave functions	30
• Total of all master/slave connections	1000

Technical specifications	
• Data length of all incoming master/slave connections, max.	4000 bytes
• Data length of all outgoing master/slave connections, max.	4000 bytes
• Number of device-internal and PROFIBUS interconnections	500
• Data length of the device-internal and PROFIBUS interconnections, max.	4000 bytes
• Data length per connection, max.	1400 bytes
Remote interconnections with acyclic transmission	
• Sampling rate: Sampling time, min.	500 ms
• Number of incoming interconnections	100
• Number of outgoing interconnections	100
• Data length of all incoming interconnections, max.	2000 bytes
• Data length of all outgoing interconnections, max.	2000 bytes
• Data length per connection (acyclic interconnections), max.	1400 bytes
Remote interconnections with cyclic transmission	
• Transmission frequency: Minimum transmission interval	10 ms
• Number of incoming interconnections	200
• Number of outgoing interconnections	200
• Data length of all incoming interconnections, max.	2000 bytes
• Data length of all outgoing interconnections, max.	2000 bytes
• Data length per connection (acyclic interconnections), max.	450 bytes
HMI variables via PROFINET (acyclic)	
• HMI variables update	500 ms
• Number of stations that can be logged on for HMI variables (PN OPC/iMAP)	3, 2xPN OPC/1x iMAP
• Number of HMI variables	200
• Data length of all HMI variables, max.	2000 bytes
PROFIBUS proxy functionality	
• Supported	Yes

Technical specifications	
• Number of coupled PROFIBUS devices	16
• Data length per connection, max.	240 bytes (slave dependent)
Interfaces	
1st interface	
Interface designation	X1
Type of interface	Integrated RS 485 interface
Hardware	RS 485
• electrically disconnected	Yes
• Interface power supply (15 V DC to 30 V DC), max.	200 mA
Functionality	
• MPI	Yes
• DP master	Yes
• DP slave	Yes
• PROFINET IO device	No
• PROFINET IO controller	No
• PROFINET CBA	No
• Open IE communication	No
• Web server	No
• Point-to-point connection	No
MPI	
Services	
• PG/OP communication	Yes
• Routing	Yes
• Global data communication	Yes
• S7 basic communication	Yes
• S7 communication	Yes (server only, connections configured at one end)
• S7 communication, as client	No (but via CP and loadable FBs)
• S7 communication, as server	Yes
Transmission rate, max.	12 Mbps
DP master	
Services	
• PG/OP communication	Yes
• Routing	Yes
• Global data communication	No

Technical specifications	
• S7 basic communication	Yes (only I blocks)
• S7 communication	Yes (server only, connections configured at one end)
• Constant bus cycle time supported	Yes
• Isochronous mode	No
• SYNC/FREEZE	Yes
• Activation/deactivation of DP slaves – Max. number of DP slaves that can be enabled / disabled simultaneously	Yes 8
• Direct data exchange (cross-traffic)	Yes (as subscriber)
• DPV1	Yes
Transmission rate, max.	12 Mbps
Number of DP slaves, max.	124
Address range	
• Inputs, max.	2 KB
• Outputs, max.	2 KB
User data per DP slave	
• Inputs, max.	244 bytes
• Outputs, max.	244 bytes
DP slave	
Services	
• PG/OP communication	Yes
• Routing	Yes (only if interface is active)
• Global data communication	No
• S7 basic communication	No
• S7 communication	Yes (only server; connection configured at one end)
• Direct data exchange (cross-traffic)	Yes
• DPV1	No
Transmission rate, max.	12 Mbps
Automatic baud rate detection	Yes (only if interface is passive)
Transfer memory	
• Inputs	244 bytes
• Outputs	244 bytes
• Address range, max.	32
• User data per address range, max.	32 bytes

Technical specifications	
GSD file	The current GSD file is available for download from the Internet (http://www.siemens.com/profibus-gsd).
2nd interface	
Interface designation	X2
Type of interface	PROFINET
Hardware	Ethernet RJ 45
• electrically disconnected	Yes
• Integrated switch	Yes
• Number of ports	2
• Automatic determination of the transmission rate	Yes (10/100 Mbps)
• Autonegotiation	Yes
• Autocrossing	Yes
Media redundancy	
• Supported	Yes
• Changeover time on line break, typically	200 ms (PROFINET MRP)
• Number of nodes on the ring, max.	50
Change of the IP address at runtime, supported	Yes
Keep Alive function, supported	Yes
Functionality	
• MPI	No
• DP master	No
• DP slave	No
• PROFINET IO controller	Yes, even simultaneously with IO device functionality
• PROFINET IO device	Yes, even simultaneously with IO controller functionality
• PROFINET CBA	Yes (acyclic and cyclic transmission)
• Open IE communication	Yes; via TCP/IP, ISO on TCP, UDP
• Web server – Number of HTTP clients	Yes 5
PROFINET IO controller	
Services	
• PG/OP communication	Yes
• Routing	Yes
• S7 communication	Yes, with loadable FBs, max. configurable connections: 10, Maximum number of instances: 32

Technical specifications	
• Open IE communication	Yes; via TCP/IP, ISO on TCP, UDP
Number of integrated PROFINET IO controllers	1
RT, supported	Yes
IRT, supported	Yes
Transmission rate, max.	100 Mbps
Maximum number of connectable IO devices	128
Number of connectable IO devices, for RT, max.	128
• of which in line, max.	128
Number of IO devices with IRT and "high flexibility" option	128
• of which in line, max.	61
Number of IO devices with IRT and "high performance" option, max.	64
• of which in line, max.	64
Shared Device, supported	Yes
Isochronous mode	Yes, OB61
Prioritized startup, supported	Yes
• Maximum number of IO devices with prioritized startup	32
Activating/deactivating of PROFINET IO Devices	Yes
• Number of IO devices that can be enabled / disabled simultaneously, max.	8
IO devices changing during runtime (partner ports), supported	Yes
• Number of IO devices per tool, max.	8
Device replacement without removable medium	Yes
Send clocks	250 µs, 500 µs,1 ms
	2 ms, 4 ms (not for IRT with "high flexibility" option)
Update time	
• Update times	The minimum update time also depends on the time slice set for PROFINET IO communication, the number of IO Devices used, and on the amount of configured user data.
With RT	
• for send clock of 250 µs	250 µs to 128 ms
• for send clock of 500 µs	500 µs to 256 ms
• for send clock of 1 ms	1 ms to 512 ms
• for send clock of 2 ms	2 ms to 512 ms
• for send clock of 4 ms	4 ms to 512 ms

Technical specifications	
For IRT with "high flexibility" option	
• for send clock of 250 µs	250 µs to 128 ms
• for send clock of 500 µs	500 µs to 256 ms
• for send clock of 1 ms	1 ms to 512 ms
For IRT with "high performance" option	
• for send clock of 250 µs	250 µs to 4 ms
• for send clock of 500 µs	500 µs to 8 ms
• for send clock of 1 ms	1 ms to 16 ms
• for send clock of 2 ms	2 ms to 32 ms
• for send clock of 4 ms	4 ms to 64 ms
For IRT with "high performance" option and parameter assignment for "odd-numbered" send clocks	Update time = "odd-numbered" send clock set (any multiple of 125 µs: 375 µs, 625 µs to 3.875 ms
Address range	
• Inputs, max.	2048 bytes
• Outputs, max.	2048 bytes
User data per address range, max.	
• User data consistency, max.	1024 bytes
PROFINET IO device	
Services	
• PG/OP communication	Yes
• Routing	Yes
• S7 communication	Yes, with loadable FBs, max. configurable connections: 10, Maximum number of instances: 32
• Open IE communication	Yes; via TCP/IP, ISO on TCP, UDP
RT, supported	Yes
IRT, supported	Yes
PROFIenergy, supported	Yes, prepared with SFB 73 / 74 for loadable PROFIenergy standard FBs for intelligent IO devices
Shared Device, supported	Yes
• Number of IO controllers for shared devices, max.	2
Isochronous mode	No
Application transfer areas	Yes
IO devices transfer area	No

Technical specifications	
Transfer memory	
• Inputs, max.	1440 bytes, per controller for shared devices
• Outputs, max.	1440 bytes, per controller for shared devices
Submodules	
• Number, max.	64
• User data per submodule, max.	1024 bytes
Programming	
Programming language	
• LAD	Yes
• FBD	Yes
• STL	Yes
• SCL	Yes
• CFC	Yes
• GRAPH	Yes
• HiGraph®	Yes
Instruction set	See instruction list
• Nesting levels	8
Know-how protection	
• User program/password security	Yes
• Encryption of blocks	Yes, using S7-Block Privacy
System functions (SFC)	See instruction list
System function blocks (SFB)	See instruction list
Integrated inputs/outputs	
Default addresses of the integrated	
Digital inputs	136 to 138
Digital outputs	136 to 137
Analog inputs	800 to 809
Analog outputs	800 to 803
Integrated functions	
• Number of counters	4 (see the Manual *Technological Functions*)
• Number of frequency meters	4 channels up to 60 kHz (see the Manual *Technological Functions*)
• Open-loop positioning	1 channel (see the Manual *Technological Functions*)
• Integrated function blocks (rules)	PID controller (see Manual *Technological Functions*)
• Number of pulse outputs	4 channels for pulse width modulation up to 2.5 kHz (see the Manual *Technological Functions*)

Technical specifications	
Dimensions	
• Mounting dimensions W x H x D (mm)	120 x 125 x 130
• Weight	730 g
Voltages and currents	
Power supply (rated value)	24 V DC
• Low limit of admissible range (DC)	19.2 V
• High limit of admissible range (DC)	28.8 V
• Current consumption (open-circuit), typically	190 mA
• Current consumption (rated value)	850 mA
• Inrush current, typ.	5 A
• I^2t	0.7 A^2s
• External protection of power supply lines (recommended), min.	MCB switch, Type C, min. 2 A; MCB switch, Type B, min. 4 A
• Power loss, typically	16 W

Reference

In the chapter *Technical specifications of the integrated I/O* you can find:

- the technical specifications of integrated I/Os under *Digital inputs of CPUs 31xC* and *Digital outputs of CPUs 31xC*.
- the block diagrams of the integrated I/Os under *Arrangement and use of integrated I/Os*.

8.7 Technical specifications of the onboard I/O

8.7.1 Arrangement and usage of integrated inputs/outputs

Introduction

The integrated inputs/outputs of the 31xC CPUs can be used for technological functions or as standard I/Os.

The figures below illustrate the possible usage of I/Os integrated in the CPUs.

Reference

Additional information on integrated I/Os can be found in the Manual *Technical Functions*.

CPU 312C: Pin assignment of the integrated DI/DO (connector X11)

Standard	Interrupt input	Counting	X11	
			1	
DI	X	Z0 (A)	2	DI+0.0
DI	X	Z0 (B)	3	DI+0.1
DI	X	Z0 (HW-Tor)	4	DI+0.2
DI	X	Z1 (A)	5	DI+0.3
DI	X	Z1 (B)	6	DI+0.4
DI	X	Z1 (HW-Tor)	7	DI+0.5
DI	X	Latch 0	8	DI+0.6
DI	X	Latch 1	9	DI+0.7
DI	X		10	DI+1. 0
	X		11	DI+1.1
			12	2M
			13	1L+
DO		V0	14	DO+0.0
DO		V1	15	DO+0.1
DO			16	DO+0.2
DO			17	DO+0.3
DO			18	DO+0.4
DO			19	DO+0.5
			20	1M

Zn	Counter n
A, B	Sensor signals
Vn	Comparator n
X	Pin can be used, provided it is not in use by technological functions
HW-Tor	Gate control
Latch	Save counter value

Block diagram of the integrated digital I/Os

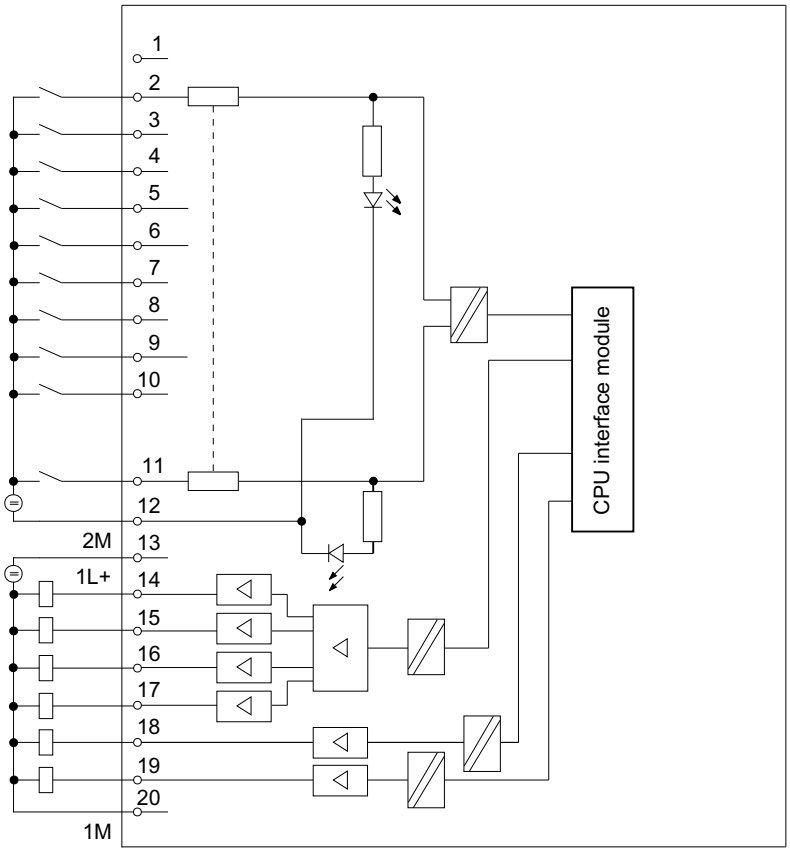

CPU 313C, CPU 313C-2 DP/PtP, CPU 314C-2 DP/PtP, CPU 314C-2 PN/DP: DI/DO (connectors X11 and X12)

X11 of the CPU 313C-2 PtP, CPU 313C-2 DP
X12 of the CPU 313C, CPU 314C-2 PtP, CPU 314C-2 DP, CPU 314C-2 PN/DP

Standard DI	Interrupt input	Counting	Positio-ning 1)						Positioning 1) digital	Positioning 1) analog	Counting	Standard DO
				1 ∅	1L+	2L+	∅ 21					
X	X	Z0 (A)	A 0	2 ∅	DI+0.0	DO+0.0	∅ 22				V0	X
X	X	Z0 (B)	B 0	3 ∅	DI+0.1	DO+0.1	∅ 23				V1	X
X	X	Z0 (HW-Tor)	N 0	4 ∅	DI+0.2	DO+0.2	∅ 24				V2	X
X	X	Z1 (A)	Tast 0	5 ∅	DI+0.3	DO+0.3	∅ 25				V3 1)	X
X	X	Z1(B)	Bero 0	6 ∅	DI+0.4	DO+0.4	∅ 26					X
X	X	Z1 (HW-Tor)		7 ∅	DI+0.5	DO+0.5	∅ 27					X
X	X	Z2 (A)		8 ∅	DI+0.6	DO+0.6	∅ 28			CONV_EN		X
X	X	Z2 (B)		9 ∅	DI+0.7	DO+0.7	∅ 29			CONV_DIR		X
				10 ∅		2M	∅ 30					
				11 ∅		3L+	∅ 31					
X	X	Z2 (HW-Tor)		12 ∅	DI+1.0	DO+1.0	∅ 32		R+			X
X	X	Z3 (A)		13 ∅	DI+1.1	DO+1.1	∅ 33		R-			X
X	X	Z3 (B)	1)	14 ∅	DI+1.2	DO+1.2	∅ 34		Rapid traverse			X
X	X	Z3 (HW-Tor)		15 ∅	DI+1.3	DO+1.3	∅ 35		Slow-action			X
X	X	Z0 (Latch)		16 ∅	DI+1.4	DO+1.4	∅ 36					X
X	X	Z1 (Latch)		17 ∅	DI+1.5	DO+1.5	∅ 37					X
X	X	Z2 (Latch)		18 ∅	DI+1.6	DO+1.6	∅ 38					X
X	X	Z3 (Latch)	1)	19 ∅	DI+1.7	DO+1.7	∅ 39					X
				20 ∅	1M	3M	∅ 40					

Zn	Counter n
A, B	Encoder signals
HW gate	Gate Control
Latch	Save counter value
Vn	Comparator n
Probe 0	Probe 0
Bero 0	Reference point switch 0
R+, R-	Directional signal
Rapid traverse	Rapid traverse
Slow-action	Creep speed
CONV_EN	Enable power unit
CONV_DIR	Direction signal (only with control mode"voltage 0 to 10 V or current from 0 mA to 10 mA and direction signal")
X	Pin can be used, provided it is not in use by technological functions

1) CPU 314C-2 only

Reference

Additional information can be found in the Manual *Technical Functions* under *Counting, Frequency Measurement and Pulse Width Modulation*

Block diagram of the integrated digital I/Os of the CPUs 313C/313C-2/314C-2

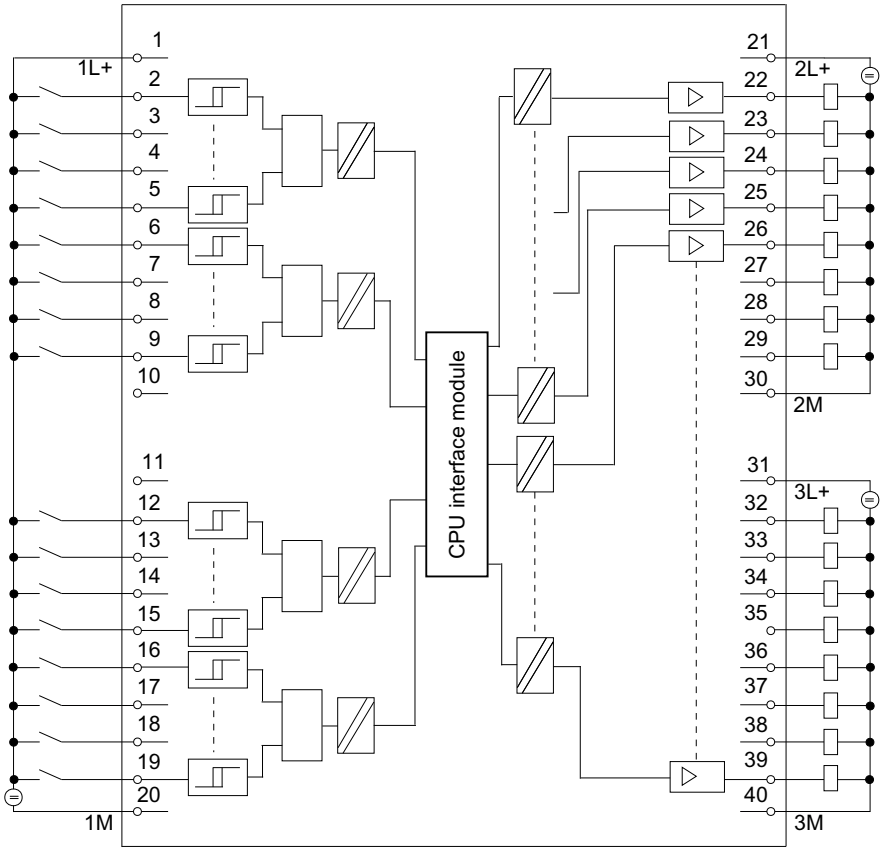

CPU 313C/314C-2: Pin-out of the integrated AI/AO and DI (connector X11)

Standard		Position 1)	X11				Standard DI	Interrupt input
			1			∅ 21		
AI (Ch0)	V		2 ∅	PEWx+0	DI+2.0	∅ 22	X	X
	I		3 ∅		DI+2.1	∅ 23	X	X
	C		4 ∅		DI+2.2	∅ 24	X	X
AI (Ch1)	V		5 ∅	PEWx+2	DI+2.3	∅ 25	X	X
	I		6 ∅		DI+2.4	∅ 26	X	X
	C		7 ∅		DI+2.5	∅ 27	X	X
AI (Ch2)	V		8 ∅	PEWx+4	DI+2.6	∅ 28	X	X
	I		9 ∅		DI+2.7	∅ 29	X	X
	C		10 ∅		4M	∅ 30		
AI (Ch3)	V		11 ∅	PEWx+6		∅ 31		
	I		12 ∅			∅ 32		
	C		13 ∅			∅ 33		
PT 100 (Ch4)			14 ∅	PEWx+8		∅ 34		
			15 ∅			∅ 35		
AO (Ch0)	V	Manipulated value 0	16 ∅	PAWx+0		∅ 36		
	A		17 ∅			∅ 37		
AO (Ch1)	V		18 ∅	PAWx+2		∅ 38		
	A		19 ∅			∅ 39		
			20 ∅	M_{ANA}		∅ 40		

1) only CPU 314C-2

Block diagram of integrated digital/analog I/Os of the CPUs 313C/314C-2

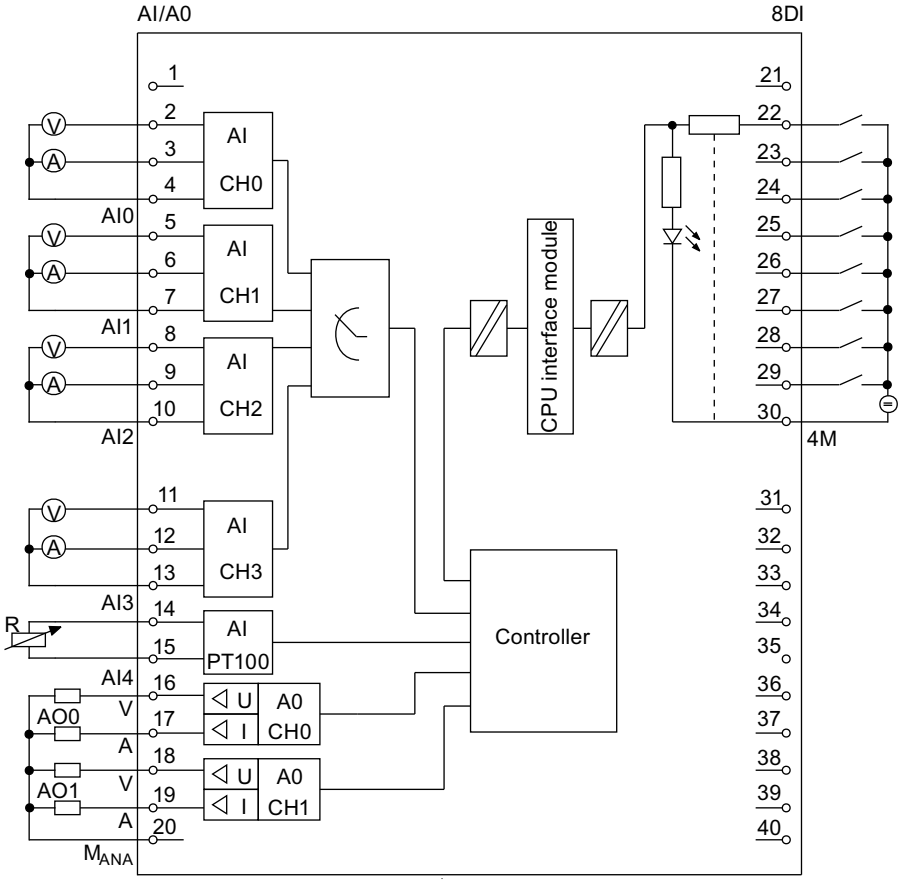

Simultaneous usage of technological functions and standard I/Os

Technological functions and standard I/Os can be used simultaneously with the appropriate hardware. For example, you can use all digital inputs not used for counting functions as standard DI.

Read access to inputs used by technological functions is possible. Write access to outputs used by technological functions is not possible.

See also

CPU 312C (Page 215)

CPU 313C (Page 224)

CPU 313C-2 PtP and CPU 313C-2 DP (Page 233)

CPU 314C-2 PtP and CPU 314C-2 DP (Page 245)

CPU 314C-2 PN/DP (Page 257)

8.7.2 Analog I/O devices

Abbreviations used in the figures below

M	Ground connection
Mx+	Measuring line "+" (positive), for channel x
Mx-	Measuring line "-" (negative), for channel x
M_{ANA}	Reference potential of the analog measuring circuit
AI_{XU}	Voltage input "+" for channel x
AI_{XI}	Current input "+" for channel x
AI_{XC}	Common current and voltage input "-" for channel x
AI_X	Analog input channel x

Wiring of the current/voltage inputs

The figures below shows the wiring diagram of the current/voltage inputs operated with 2-/4-wire transducers.

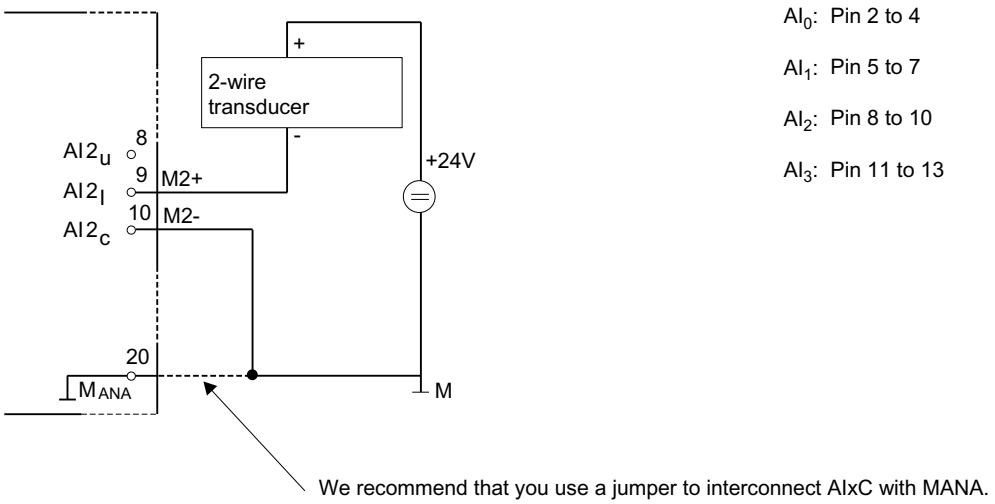

Figure 8-1 Connection of a 2-wire transducer to an analog current/voltage input of the CPU 313C/314C-2

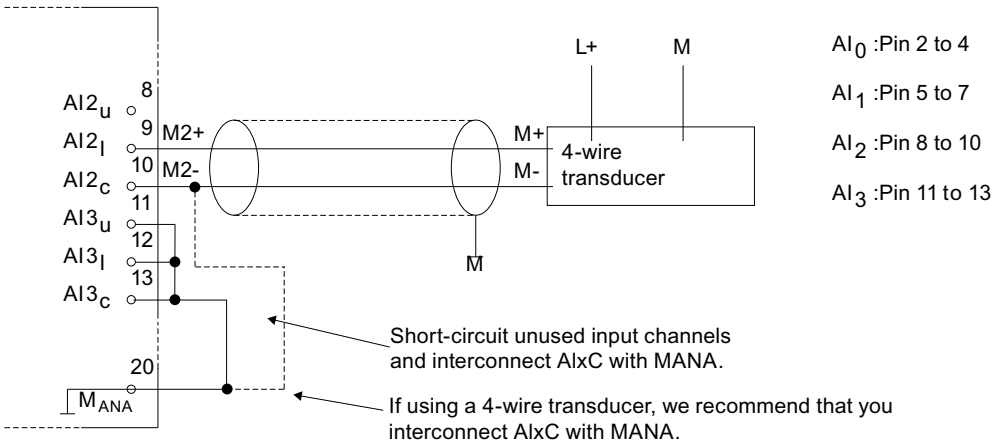

Figure 8-2 Connection of a 4-wire transducer to an analog current/voltage input of the CPU 313C/314C-2

Measuring principle

31xC CPUs use the measuring principle of actual value encoding. They operate with a sampling rate of 1 kHz. That is, a new value is available at the peripheral input word register once every millisecond and can then be read via the user program (e.g. L PEW). The "previous" value is read again if access times are shorter than 1 ms.

Integrated hardware low-pass filter

The analog input signals of channels 0 to 3 pass through integrated low-pass filters. They are attenuated according to the trend in the figure below.

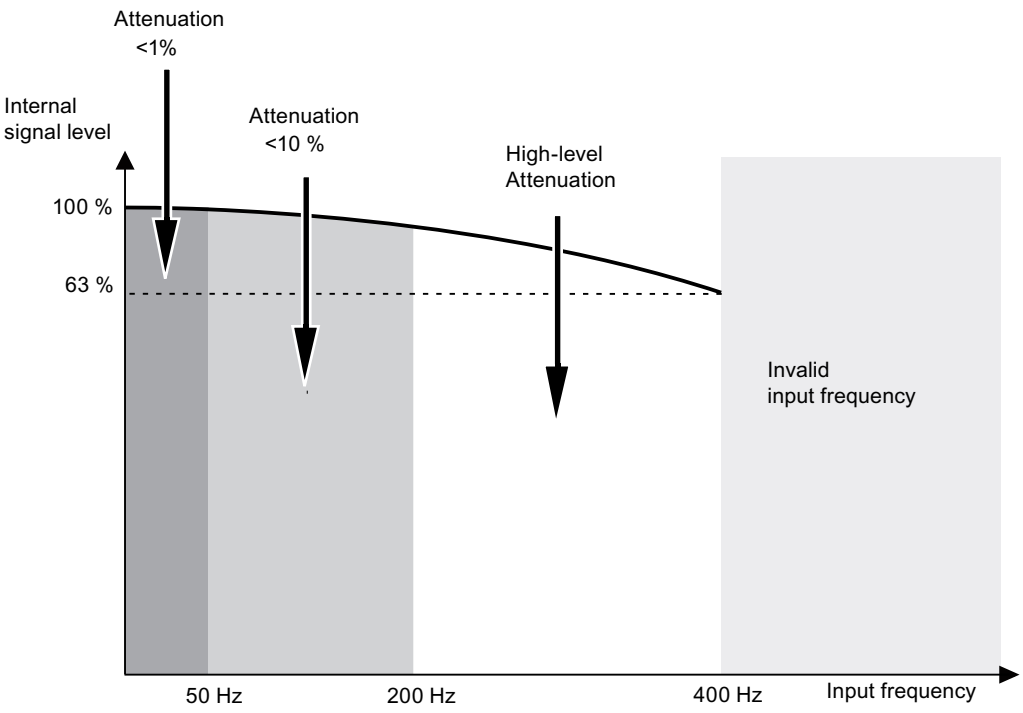

Figure 8-3 Low-pass characteristics of the integrated filter

Note

The maximum frequency of the input signal is 400 Hz.

Input filters (software filter)

The current/voltage inputs have a software filter for the input signals which can be parameterized with STEP 7. It filters the parameterized interference frequency (50/60 Hz) and multiples thereof.

The selected interference frequency suppression also determines the integration time. With an interference frequency suppression of 50 Hz the software filter generates the mean value based on the last 20 measurements and saves the result as a measured value.

You can suppress interference frequencies (50 Hz or 60 Hz) according to the parameters set in STEP 7. The interference frequency suppression will not work with a setting of 400 Hz (software filter deactivated).

The analog input signals of channels 0 to 3 pass through integrated low-pass filters.

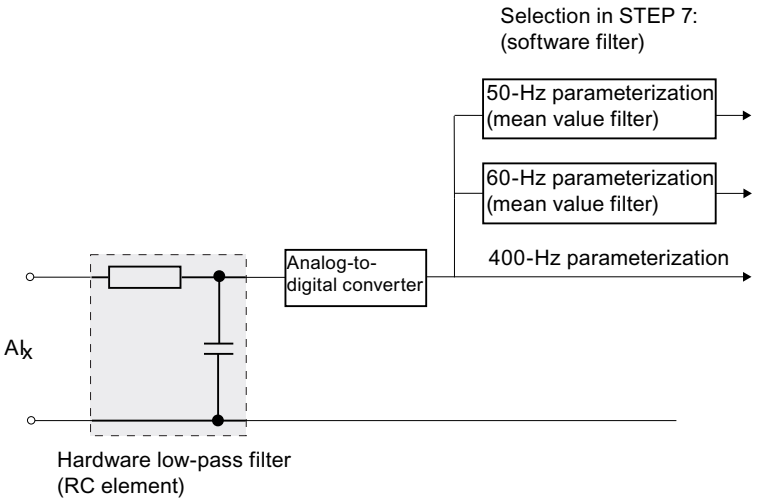

Figure 8-4 Principle of interference suppression with STEP 7

The two graphics below illustrate the principle of operation of 50 Hz and 60 Hz interference frequency suppression

Example of a 50 Hz interference suppression (integration time corresponds to 20 ms)

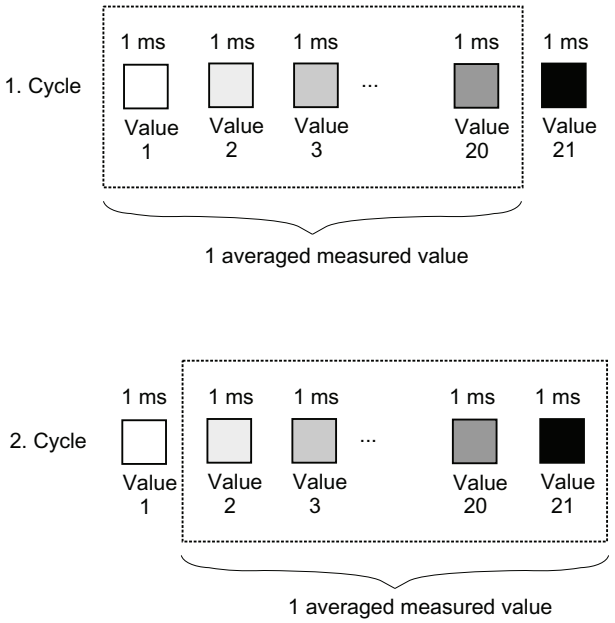

Figure 8-5 50 Hz interference frequency suppression

Example of a 60 Hz interference suppression (integration time corresponds to 16,7 ms)

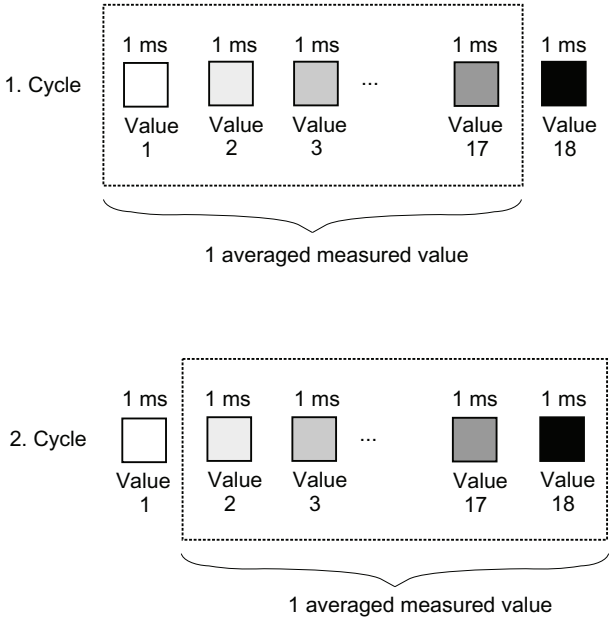

Figure 8-6 60 Hz interference frequency suppression

Note

If the interference frequency is not 50/60 Hz or a multiple thereof, the input signal must be filtered externally.
In this case, 400 Hz interference frequency suppression must be configured for the respective input. This is equivalent to a "deactivation" of the software filter.

Inputs not connected

The 3 inputs of a current/voltage analog output channel that is not connected should be bypasses and connected to M_{ANA} (pin 20 of the front connector). This ensures maximum interference immunity for these analog inputs.

Outputs not connected

In order to disconnect unused analog outputs from power, you must disable and leave them open during parameter assignment with STEP 7.

Reference

For detailed information (e.g. visualization and processing of analog values), refer to Chapter 4 of the *Module Data* Manual.

8.7.3 Parameterization

Introduction

You configure the integrated I/O of CPU 31xC with STEP 7. Always make these settings when the CPU is in STOP mode. The generated parameters are downloaded from the PG to the S7-300 and written to CPU memory .

You can also choose to change the parameters with SFC 55 in the user program (see the Reference Manual *System and Standard Functions*). Refer to the structure of record 1 for the respective parameters.

Parameters of standard DI

The table below gives you an overview of the parameters for standard digital inputs.

Table 8- 8 Parameters of standard DI

Parameters	Range of values	Default	Scope
Input delay (ms)	0,1/0,5/3/15	3	Channel group

The table below gives you an overview of the parameters when using digital inputs as interrupt inputs.

Table 8- 9 Parameters of the interrupt inputs

Parameters	Range of values	Default	Scope
Interrupt input	Disabled/rising edge	Disabled	Digital input
Interrupt input	Disabled/falling edge	Disabled	Digital input

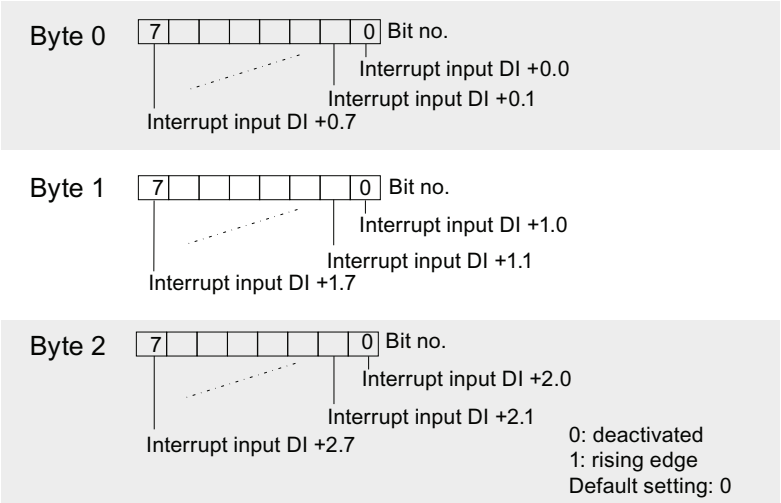

Byte 3 reserved

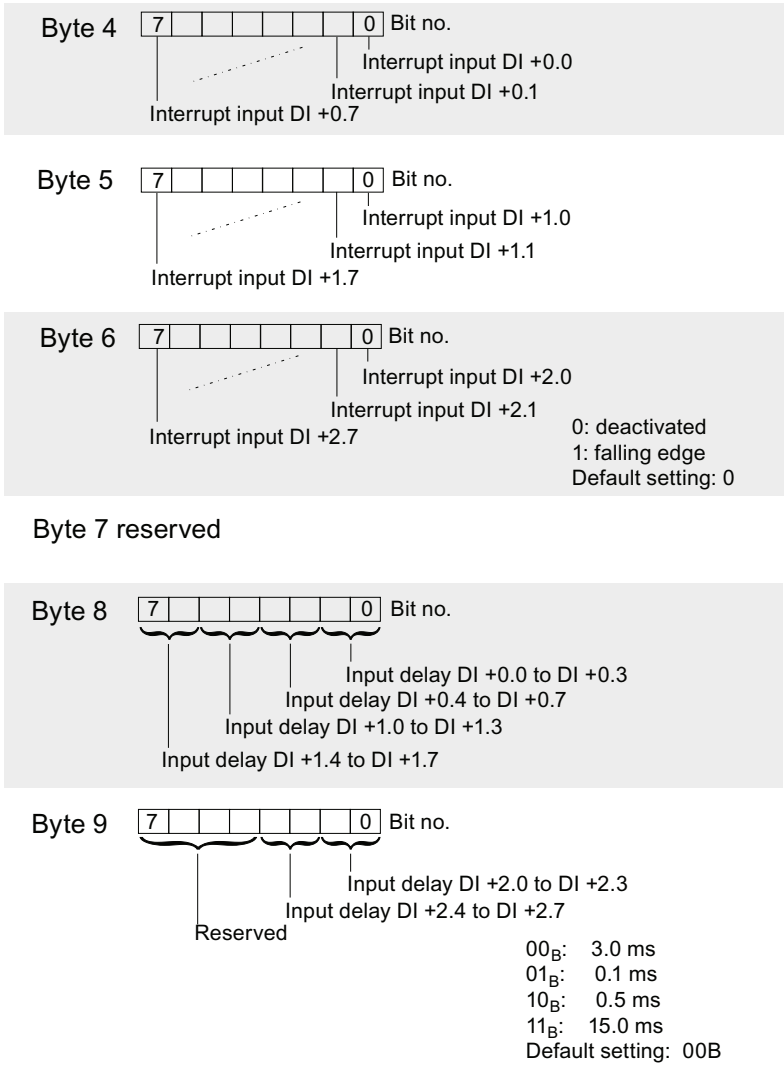

Figure 8-7 Structure of the data record 1 for standard DI and interrupt inputs (length of 10 bytes)

Parameters of standard DO

There are no parameters for standard digital outputs.

Parameters of standard AI

The table below gives you an overview of the parameters for standard analog inputs.

Table 8- 10 Parameters of standard AI

Parameters	Range of values	Default	Scope
Integration time (ms) Interference frequency suppression (Hz) (channels 0 to 3)	2,5/16,6/20 400*/60/50	20 50	Channel Channel
Measuring range (channels 0 to 3)	• Disabled • ± 20 mA • 0 ... 20 mA • 4 ... 20 mA • ± 10 V • 0 ... 10 V	± 10 V	Channel
Measuring method (channels 0 to 3)	Deactivated/ U voltage/ I current	U voltage	Channel
Unit of measurement (channel 4)	Celsius/Fahrenheit/ Kelvin	Celsius	Channel
Measuring range (Pt 100 input; channel 4)	Deactivated/ Pt 100/600 Ω	600 Ω	Channel
Measuring method (Pt 100 input; channel 4)	Deactivated/ resistance/ thermal resistance	Resistance	Channel
* Software filter for the interference frequency suppression is deactivated when parameters are set to "400 Hz".			

Reference

See also Chapter 4.3 in the *Module Data* Reference Manual.

Parameters of standard AO

The table below gives you an overview of standard analog output parameters (see also Chapter 4.3 in the *Module Data* Reference Manual).

Table 8- 11 Parameters of standard AO

Parameters	Range of values	Default	Scope
Output range (channels 0 to 1)	• Disabled • ± 20 mA • 0 ... 20 mA • 4 ... 20 mA • ± 10 V • 0 ... 10 V	± 10 V	Channel
Output type (channels 0 to 1)	Deactivated/ U voltage/ I current	U voltage	Channel

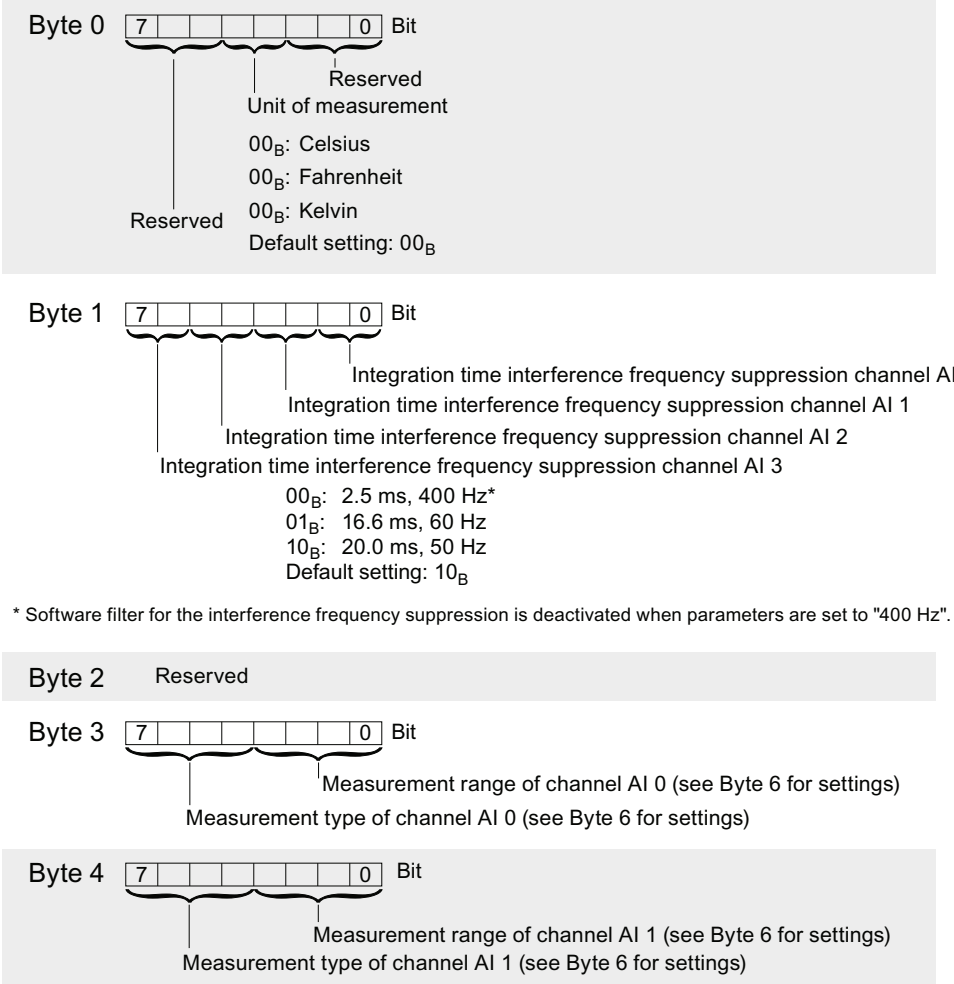

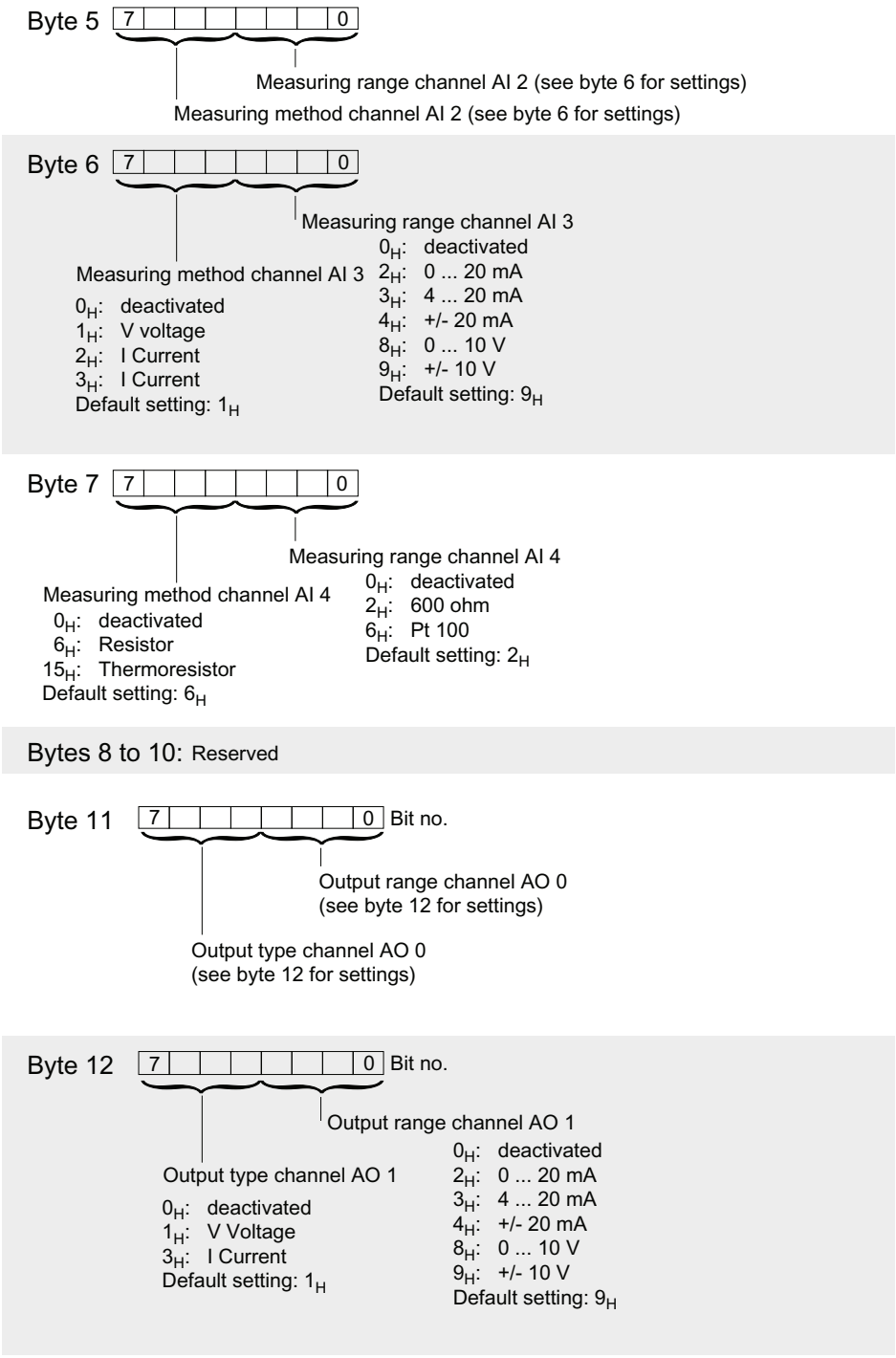

Figure 8-8 Structure of the data record 1 for standard AI/AO (length of 13 bytes)

Parameters for technological functions

The parameters for the respective function are found in the Manual *Technological Functions*.

8.7.4 Interrupts

Interrupt inputs

All digital inputs of the on-board I/O of the CPUs 31xC can be used as interrupt inputs.

You can specify the interrupt behavior for each individual input in your parameterization. Options are:

- No interrupt
- Interrupt when edge is rising
- Interrupt when edge is falling
- Interrupt when edge is rising or falling

Note

Every channel will retain 1 event if the rate of incoming interrupts exceeds the handling capacity of OB40. Further events (interrupts) will be lost, without diagnostics or explicit message.

Start information for OB40

The table below shows the relevant temporary variables (TEMP) of OB40 for the interrupt inputs of 31xC CPUs. A description of the hardware interrupt OB 40 is found in the Reference Manual *System and Standard Functions*.

Table 8- 12 Start information for OB40, relating to the interrupt inputs of the integrated I/O

Byte	Variable	Data type		Description
6/7	OB40_MDL_ADDR	WORD	B#16#7C For the CPU 314C-2 PN/DP: :B#16#88	Address of the interrupt-triggering module (in this case: default addresses of the digital inputs)
8 or higher	OB40_POINT_ADDR	DWORD	See figure below	Displaying the interrupt-triggering integrated inputs

The following figure shows an example of the states for the interrupt-triggering integrated alarm inputs for the default addresses I124.0 to I126.7.

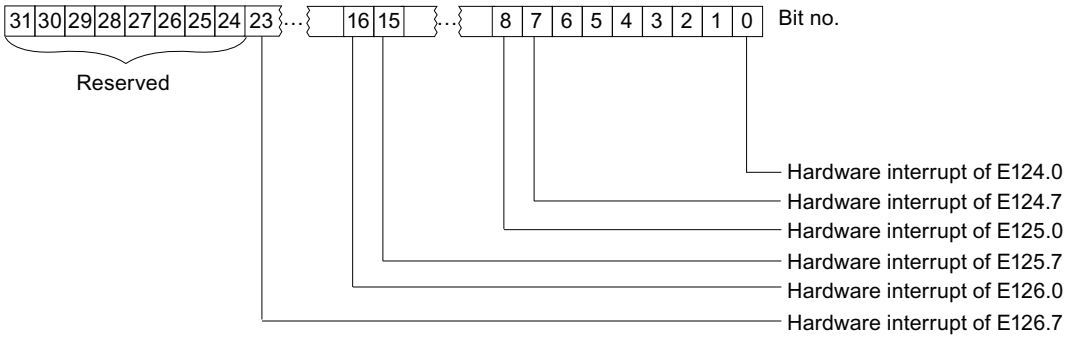

Figure 8-9 Example of the display of states of CPU 31xC interrupt inputs

8.7.5 Diagnostics

Standard I/O

Diagnostic is not available for integrated inputs/outputs used as standard I/O (see also the Reference Manual *Module Data*).

Technological functions

Diagnostics options for the respective technological function are found in the Manual *Technological Functions*.

8.7.6 Digital inputs

Introduction

This section specifies the technical specifications of the digital inputs for the CPUs 31xC.

The table includes the following CPUs:

- under CPU 313C-2, the CPUs 313C-2 DP and 313C-2 PtP
- Under CPU 314C-2, the CPU 314C-2 DP, CPU 314C-2 PtP and CPU 314C-2 PN/DP

Technical specifications

Table 8- 13 Technical specifications of digital inputs

Technical specifications				
	CPU 312C	CPU 313C	CPU 313C-2	CPU 314C-2
Module-specific data	**CPU 312C**	**CPU 313C**	**CPU 313C-2**	**CPU 314C-2**
Number of inputs	10	24	16	24
• Inputs which can be used for technological functions	8	12	12	16
Cable length				
• unshielded, max.	600 m; for technological functions: No			
• shielded, max.	1000 m; for technological function at max. counting frequency			
	100 m	100 m	100 m	50 m
Voltage, currents, potentials	**CPU 312C**	**CPU 313C**	**CPU 313C-2**	**CPU 314C-2**
Rated load voltage L+	24 V DC			
• Reverse polarity protection	Yes			
Number of simultaneously controlled inputs				
• Horizontal arrangement – Up to 40 °C – Up to 60 °C	 10 5	 24 12	 16 8	 24 12
• Vertical arrangement – Up to 40 °C	 5	 12	 8	 12
Isolation				
• Between channels and the backplane bus	Yes			
• Between channels	No			
Permissible potential difference				
• Between different circuits	75 V DC/60 V AC			
Isolation test voltage	600 V DC			
Current consumption				
• from load voltage L+ (no load), max.	–	80 mA	80 mA	80 mA
Status, interrupts, diagnostics	**CPU 312C**	**CPU 313C**	**CPU 313C-2**	**CPU 314C-2**
Status indication	Green LED per channel			
Interrupts	• Yes, if the corresponding channel is configured as interrupt input • For using technological functions, please refer to the *Technological Functions* Manual.			
Diagnostic functions	• No diagnostics when operated as standard I/O • For using technological functions, please refer to the *Technological Functions* Manual.			

Technical specifications				
	CPU 312C	CPU 313C	CPU 313C-2	CPU 314C-2
Data for the selection of an encoder for standard DI	**CPU 312C**	**CPU 313C**	**CPU 313C-2**	**CPU 314C-2**
Input voltage				
• Rated value	24 V DC			
• For "1" signal	15 V to 30 V			
• For "0" signal	-3 V to 5 V			
Input current				
• with "1" signal, typ.	8 mA			
Input delay of standard inputs				
• Programmable	Yes (0.1 / 0.5 / 3 / 15 ms) You can reconfigure the input delay of the standard inputs during program runtime. Please note that your newly set filter time may only take effect after the previously set filter time has expired.			
• Rated value	3 ms			
For using technological functions: "Minimum pulse width/minimum pause between pulses at maximum counting frequency"	48 µs	16 µs	16 µs	8 µs
Input characteristics	to IEC 61131, Type 1			
Connection of 2-wire BEROs	Supported			
• Permitted quiescent current, max.	1.5 mA			

8.7.7 Digital outputs

Introduction

This chapter contains the technical specifications of the digital outputs for the CPUs 31xC.

The table includes the following CPUs:

- under CPU 313C-2, the CPUs 313C-2 DP and 313C-2 PtP
- Under CPU 314C-2, the CPU 314C-2 DP, CPU 314C-2 PtP and CPU 314C-2PN/DP

Fast digital outputs

Technological functions use fast digital outputs.

Technical specifications

Table 8- 14 Technical specifications of digital outputs

Technical specifications				
	CPU 312C	CPU 313C	CPU 313C-2	CPU 314C-2
Module-specific data	**CPU 312C**	**CPU 313C**	**CPU 313C-2**	**CPU 314C-2**
Number of outputs	6	16	16	16
• Of those as fast outputs	2	4	4	4
	Notice: You cannot connect the fast outputs of your CPU in parallel.			
Cable length				
• unshielded, max.	600 m			
• shielded, max.	1000 m			
Voltage, currents, potentials	**CPU 312C**	**CPU 313C**	**CPU 313C-2**	**CPU 314C-2**
Rated load voltage L+	24 V DC			
• Reverse polarity protection	No			
Aggregate current of outputs (per group)				
• Horizontal installation, max. – Up to 40 °C – Up to 60 °C	 2.0 A 1.5 A	 3.0 A 2.0 A	 3.0 A 2.0 A	 3.0 A 2.0 A
• Vertical installation, max. – Up to 40 °C	 1.5 A	 2.0 A	 2.0 A	 2.0 A
Isolation				
• Between channels and the backplane bus	Yes			
• Between channels - In groups of	No –	Yes 8	Yes 8	Yes 8
Permissible potential difference				
• Between different circuits	75 V DC/60 V AC			
Isolation test voltage	600 V DC			
Current consumption				
• From load voltage L+, max.	25 mA	50 mA	50 mA	50 mA
Status, interrupts, diagnostics	**CPU 312C**	**CPU 313C**	**CPU 313C-2**	**CPU 314C-2**
Status indication	Green LED per channel			
Interrupts	• No interrupts when operated as standard I/O • For using technological functions, please refer to the *Technological Functions* Manual.			
Diagnostic functions	• No diagnostics when operated as standard I/O • For using technological functions, please refer to the *Technological Functions* Manual.			

Technical specifications				
	CPU 312C	CPU 313C	CPU 313C-2	CPU 314C-2
Data for the selection of an actuator for standard DO	CPU 312C	CPU 313C	CPU 313C-2	CPU 314C-2
Output voltage				
• with "1" signal, min.	L+ (-0.8 V)			
Output current				
• With "1" signal - Rated value - Permissible range	 0.5 A 5 mA to 0.6 A			
• With "0" signal (residual current), max.	0.5 mA			
Load resistance range	48 Ω to 4 kΩ			
Lamp load, max.	5 W			
Triggering a digital input	Yes			
Wiring 2 outputs in parallel				
• For redundant control of a load	Supported			
• For performance increase	Not supported			
Triggering a digital input	Supported			
Switching frequency				
• With resistance load, max.	100 Hz			
• With inductive load to IEC 947-5, DC13	0.5 Hz			
• With lamp load, max.	100 Hz			
• High-speed outputs with resistive load, max.	2.5 kHz			
Limiting (internal) of inductive shutdown voltage, typically	(L+) -48 V			
Short-circuit protection of the output	Yes, electronic clocking			
• Response threshold, typ.	1 A			

8.7.8 Analog inputs

Introduction

This chapter contains the technical specifications of analog inputs for the CPUs 31xC.

The table includes the following CPUs:

- CPU 313C
- CPU 314C-2 DP
- CPU 314C-2 PtP
- CPU 314C-2 PN/DP

Technical specifications

Table 8- 15 Technical specifications of analog inputs

Technical specifications	
Module-specific data	
Number of inputs	4 channels current/voltage input 1 channel resistance input
Cable length	
• Shielded, max.	100 m
Voltage, currents, potentials	
Resistance input	
• Open-circuit voltage, typically	3.3 V
• Measuring current, typically	1.25 mA
Isolation	
• Between channels and the backplane bus	Yes
• Between channels	No
Permissible potential difference	
• Between inputs (AI_C) and M_{ANA} (U_{CM})	8.0 VDC
• Between M_{ANA} and $M_{internal}$ (V_{ISO})	75 V DC/60 V AC
Isolation test voltage	600 VDC
Analog value generation	
Measuring principle	Actual value encoding (successive approximation)
Integration/conversion time/resolution (per channel)	
• Programmable	Yes
• Integration time in ms	16,6/20
• Permissible input frequency, max.	400 Hz
• Resolution (including overrange)	11 bits + sign
• Noise suppression for interference frequency f1	60/50 Hz
Time constant of the input filter	0.38 ms
Basic execution time	1 ms
Noise suppression, error limits	
Noise suppression for f = nx (f1 ± 1%), (f1 = interference frequency), n = 1, 2	
• Common-mode interference (U_{CM} < 1.0 V)	> 40 dB
• Series-mode interference (peak value of disturbance < rated value of input range)	> 30 dB
Crosstalk between inputs	> 60 dB
Operational limit (across temperature range, relative to input range)	

Technical specifications	
• Voltage/current	<1 %
• Resistance	<1 %
Basic error limit (operational limit at 25 °C, relative to input range)	
• Voltage/current – Linearity error during measurement of current and voltage (related to input range)	<0.8% ±0.06%
• Resistance – Linearity error during resistance measurement (related to input range)	<0.8% ±0.2%
Temperature error (relative to input range)	± 0.006 %/K
Repeat accuracy (in transient state at 25 °C, relative to input range)	±0.06%
Status, interrupts, diagnostics	
Interrupts	• No interrupts when operated as standard I/O
Diagnostic functions	• No diagnostics when operated as standard I/O • For using technological functions, please refer to the *Technological Functions* Manual.
Encoder selection data	
Input ranges (rated values)/input impedance	
• Voltage	± 10 V/100 kΩ 0 V to 10 V/100 kΩ
• Current	± 20 mA/100 Ω 0 mA to 20 mA/100 Ω 4 mA to 20 mA/100 Ω
• Resistance	0 Ω to 600 Ω/10 MΩ
• Resistance thermometer	Pt 100/10 MΩ
Permitted input voltage (destruction limit)	
• At voltage input, max.	30 V sustained
• For current input, max.	5 V sustained
Permitted input current (destruction limit)	
• At voltage input, max.	0.5 mA sustained
• For current input, max.	50 mA sustained
Connection of signal transmitters	
• For voltage measurement	Supported
• For current measurement - As 2-wire transducer - As 4-wire transducer	 supported with external supply supported

Technical specifications	
• For resistance measurement - With 2-wire connection - With 3-wire connection - With 4-wire connection	 Possible, without compensation of the line resistances Not possible Not possible
Linearization of the characteristics curves	By software
• For resistance thermometers	Pt 100
Temperature compensation	No
Technical unit of temperature measurement	Degrees Celsius (°C)Degrees Fahrenheit (°F) Kelvin (K)

8.7.9 Analog outputs

Introduction

This chapter contains the technical specifications of the analog outputs for the CPUs 31xC.

The table includes the following CPUs:

- CPU 313C
- CPU 314C-2 DP
- CPU 314C-2 PtP
- CPU 314C-2 PN/DP

Technical specifications

Table 8- 16 Technical specifications of analog outputs

Technical specifications	
Module-specific data	
Number of outputs	2
Cable length	
• Shielded, max.	200 m
Potentials	
Isolation	
• Between channels and the backplane bus	Yes
• Between channels	No
Permissible potential difference	
• Between M_{ANA} and $M_{internal}$ (V_{ISO})	75 V DC/60 V AC
Isolation test voltage	600 V DC

Technical specifications	
Analog value generation	
Resolution (including overrange)	11 bits + sign
Conversion time (per channel)	1 ms
Settling time	
• With resistive load	0.6 ms
• With capacitive load	1.0 ms
• With inductive load	0.5 ms
Noise suppression, error limits	
Crosstalk between outputs	> 60 dB
Operational limit (across temperature range, relative to output range)	
• Voltage/current	±1 %
Basic error limit (operational limit at 25 °C, relative to output range)	
• Voltage/current	±0.8%
Temperature error (relative to output range)	± 0.01%/K
Linearity error (relative to output range)	±0.15%
Repeat accuracy (in transient state at 25 °C, relative to output range)	±0.06%
Output ripple; range 0 Hz to 50 kHz (relative to output range)	± 0.1%
Status, interrupts, diagnostics	
Interrupts	• No interrupts when operated as standard I/O • For using technological functions, please refer to the *Technological Functions* Manual.
Diagnostic functions	• No diagnostics when operated as standard I/O • For using technological functions, please refer to the *Technological Functions* Manual.
Actuator selection data	
Output range (rated values)	
• Voltage	± 10 V 0 V to 10 V
• Current	± 20 mA 0 mA to 20 mA 4 mA to 20 mA
Load impedance (in the nominal range of the output)	
• At voltage outputs, min. – Capacitive load, max.	1 kΩ 0.1 µF
• At current outputs, max. – Inductive load	300 Ω 0.1 mH
Voltage output	
• Short-circuit protection	Yes

Technical specifications	
• Short-circuit current, typically:	55 mA
Current output	
• Open-circuit voltage, typically	14 V
Destruction limit against external voltages/currents	
• Voltage at the outputs against M_{ANA}, max.	16 V sustained
• Current, max.	50 mA sustained
Wiring the actuators	
• For voltage output - 2-wire connection - 4-wire connection (measuring line)	 Supported, without compensation of the line resistances Not supported
• For current output - 2-wire connection	 Supported

Technical specifications of CPU 31x

9

9.1 General technical specifications

9.1.1 Dimensions of CPU 31x

Each CPU features the same height and depth, only the width differs.

- Height: 125 mm
- Depth: 115 mm, or 180 mm with opened front cover.

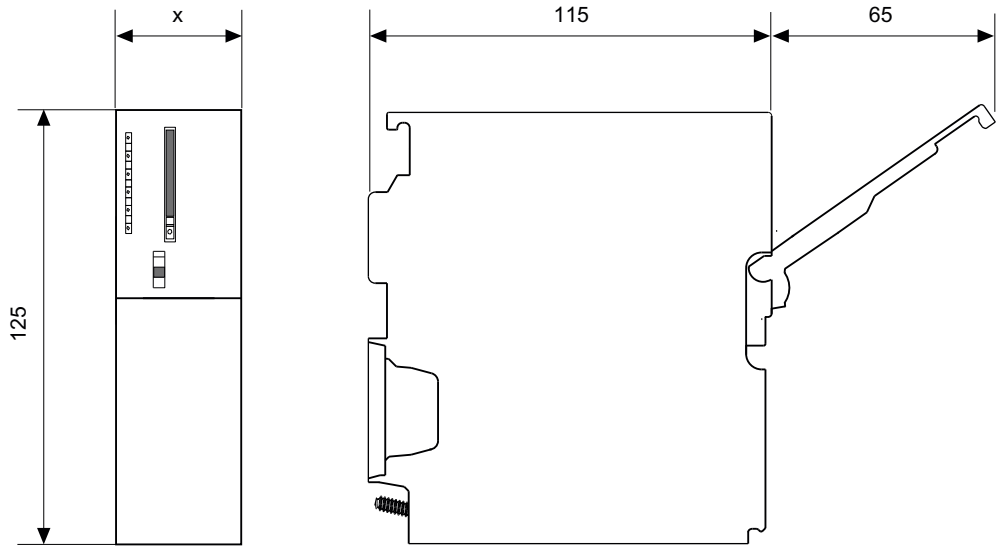

Figure 9-1 Dimensions of CPU 31x

Width of CPU

CPU	Width (x)
CPU 312	40 mm
CPU 314	40 mm
CPU 315-2 DP	40 mm
CPU 315-2 PN/DP	40 mm
CPU 317-2 DP	40 mm
CPU 317-2 PN/DP	40 mm
CPU 319	120 mm

9.1.2 Technical specifications of the SIMATIC Micro Memory Card

Compatible SIMATIC Micro Memory Cards

The following memory modules are available:

Table 9- 1 Available SIMATIC Micro Memory Cards

Type		Order number	Required for a firmware update via SIMATIC Micro Memory Card
Micro Memory Card	64 KB	6ES7953-8LFxx-0AA0	–
Micro Memory Card	128 KB	6ES7953-8LGxx-0AA0	–
Micro Memory Card	512 KB	6ES7953-8LJxx-0AA0	–
Micro Memory Card	2 MB	6ES7953-8LLxx-0AA0	Minimum requirement for CPUs without DP interface
Micro Memory Card	4 MB	6ES7953-8LMxx-0AA0	Minimum requirements for CPUs with DP interface, but without PN interface
Micro Memory Card	8 MB	6ES7953-8LPxx-0AA0	Minimum requirements for CPUs with DP and PN interface

Maximum number of loadable blocks on the SIMATIC Micro Memory Card

The number of blocks that can be stored on the SIMATIC Micro Memory Card depends on the capacity of the SIMATIC Micro Memory Card being used The maximum number of blocks that can be loaded is therefore limited by the capacity of your SIMATIC Micro Memory Card (including blocks generated with the "CREATE DB" SFC)

Table 9- 2 Maximum number of loadable blocks on the SIMATIC Micro Memory Card

Size of SIMATIC Micro Memory Card	... Maximum number of blocks that can be loaded
64 KB	768
128 KB	1024
512 KB	2560
2 MB	The maximum number of blocks that can be loaded on a specific CPU is less than the number of blocks that can be stored on the SIMATIC Micro Memory Card. For information about the maximum number of blocks that can be loaded on a specific CPU, refer to the corresponding technical specification.
4 MB	
8 MB	

9.2 CPU 312

Technical specifications

Table 9- 3 Technical specifications of the CPU 312

Technical specifications	
CPU and version	
• MLFB	6ES7312-1AE14-0AB0
• Hardware version	01
• Firmware version	V3.3
• Associated programming package	STEP 7 as of V5.5 + SP1 or STEP 7 as of V5.2 + SP1 with HSP 218
Memory	
Main memory	
• Integrated	32 KB
• Expandable	No
• Maximum size of non-volatile memory for retentive data blocks,	32 KB
Load memory	
• Pluggable (MMC)	Yes
• Pluggable (MMC), max.	8 MB
• Data retention on the Micro Memory Card (after the last programming action), min.	10 years
Backup	
• Available	Yes (ensured with Micro Memory Card - maintenance-free)
• Without battery	Yes (program and data)
Execution times	
• for bit operation, min.	0.1 µs
• for word operations, min.	0.24 µs
• for fixed-point arithmetic, min.	0.32 µs
• for floating-point arithmetic, min.	1.10 µs
Timers/counters and their retentivity	
S7 counters	
• Number	256
Retentivity	
• Configurable	Yes
• Default	Z 0 to Z 7

Technical specifications	
Counting range	
• Low limit	0
• High limit	999
IEC counter	
• Available	Yes
• Type	SFB
• Number	Unlimited (limited only by main memory size)
S7 timers	
• Number	256
Retentivity	
• Configurable	Yes
• Default	No retentivity
Time setting range	
• Low limit	10 ms
• High limit	9990 s
IEC timer	
• Available	Yes
• Type	SFB
• Number	Unlimited (limited only by main memory size)
Data areas and their retentivity	
Bit memory	
• Number, max.	256 bytes
• Retentivity, available	Yes (MB 0 to MB 255)
• Retentivity, default	MB 0 to MB 15
• Number of clock memories	8 (1 memory byte)
Data blocks	
• Number, max.	1024 (in the number range 1 to 16000)
• Size, max.	32 KB
• Retentivity, configurable	Yes, via non-retain feature on the DB
• Retentivity, default	Yes
Local data	
• Per priority class, max.	32 KB per execution level, 2 KB per block

Technical specifications	
Blocks	
• Number of blocks (total)	1024 (DBs, FCs, FBs) The maximum number of blocks that can be loaded may be reduced due to the Micro Memory Card you are using.
OB	See instruction list
• Size, max.	32 KB
• Number of free cycle OBs	1 (OB 1)
• Number of time-of-day interrupt OBs	1 (OB 10)
• Number of time-delay interrupt OBs	2 (OB 20, 21)
• Number of cyclic interrupt OBs	4 (OB 32, 33, 34, 35)
• Number of hardware interrupt OBs	1 (OB 40)
• Number of restart OBs	1 (OB 100)
• Number of asynchronous error OBs	4 (OB 80, 82, 85, 87)
• Number of synchronous error OBs	2 (OB 121, 122)
Nesting depth	
• Per priority class	16
• Additionally within an error OB	4
FB	See instruction list
• Number, max.	1024 (in the number range 0 to 7999)
• Size	32 KB
FC	See instruction list
• Number, max.	1024 (in the number range 0 to 7999)
• Size	32 KB
Address ranges (inputs/outputs)	
I/O address area	
• Inputs	1024 bytes (freely addressable)
• Outputs	1024 bytes (freely addressable)
I/O process image	
• Inputs	1024 bytes
• Outputs	1024 bytes
• Inputs, adjustable	1024 bytes
• Outputs, adjustable	1024 bytes
• Inputs, preset	128 bytes
• Outputs, preset	128 bytes

Technical specifications	
Digital channels	
• Inputs	256
• Outputs	256
• Inputs, of those central	256
• Outputs, of those central	256
Analog channels	
• Inputs	64
• Outputs	64
• Inputs, of those central	64
• Outputs, of those central	64
Hardware configuration	
• Racks, max.	1
• Modules per rack, max.	8
Number of DP masters	
• Integrated	0
• Via CP	4
Number of usable FMs and CPs (recommended)	
• FM, max.	8
• CP, point-to-point	8
• CP, LAN	4
Time-of-day	
Clock	
• Software clock	Yes
• Buffered, can be synchronized	Buffered: No Can be synchronized: Yes
• Factory setting	DT#1994-01-01-00:00:00
• Behavior of the real-time clock after POWER ON	The clock continues at the time of day it had when power was switched off.
• Daily deviation	10 s, typ. 2 s
Runtime meter	
• Number	1
• Number/number range	0
• Range of values	0 to 2^{31} hours (if SFC 101 is used)
• Granularity	1 hour
• Retentive	Yes; must be manually restarted after every restart

Technical specifications	
Clock synchronization	
• supported	Yes
• On MPI, master	Yes
• On MPI, slave	Yes
• On the AS, master	Yes
• In AS, Slave	No
S7 signaling functions	
• Number of stations that can be logged on for signaling functions, max.	6 (depends on the number of connections configured for PG/OP and S7 basic communication)
• Process error diagnostic messages	Yes
• Simultaneously enabled interrupt S blocks, max.	300
Test and startup functions	
Status/modify variable	Yes
• Variables	Inputs, outputs, bit memories, DBs, timers, counters
• Maximum number of variables	30
• Status variables, max.	30
• Modify variables, max.	14
Forcing	
• Forcing	Yes
• Variables	Inputs, outputs
• Maximum number of tags	10
Status block	Yes (max. 2 blocks simultaneously)
Single step	Yes
• Number of breakpoints	4
Diagnostic buffer	
• Available	Yes
• Maximum number of entries	500
• Configurable	No
• of which are power-failure-proof	100, only the last 100 entries are retentive
• Maximum number of entries that can be read in RUN	499
• Number of entries that can be set in RUN	Yes (from 10 to 499)
• Number of preset entries in RUN	10

Technical specifications	
Service data	
• Can be read out	Yes
Monitoring function	
• Status LEDs	Yes
Communication functions	
PG/OP communication	Yes
Prioritized OCM communication	
• Supported	No
Routing	No
• Number of routing connections	-
• Data record routing	No
Global data communication	
• Supported	Yes
• Number of GD circles, max.	8
• Number of GD packages, max.	8
• Number of GD packages, sender, max.	8
• Number of GD packages, receiver, max.	8
• Size of GD packages, max.	22 bytes
• Size of GD packages, of those consistent, max.	22 bytes
S7 basic communication	
• Supported	Yes
• User data per job, max.	76 bytes
• User data per job, consistent, max.	76 bytes (for X_SEND/RCV); 64 bytes (for X_PUT/GET as server)
S7 communication	
• Supported	Yes
• As server	Yes
• As client	Yes, via CP and loadable FBs
• User data per job, max.	180 bytes (for PUT/GET)
• User data per job, consistent, max.	240 bytes (as server)
S5-compatible communication	
• Supported	Yes (via CP and loadable FCs)
Maximum number of connections	
• Total	6

Technical specifications	
Suitable for PG communication	5
• PG communication, reserved	1
• PG communication, configurable, min.	1
• PG communication, configurable, max.	5
Suitable for OP communication	5
• OP communication, reserved	1
• OP communication, configurable, min.	1
• OP communication, configurable, max.	5
Suitable for S7 basic communication	2
• S7 basic communication, reserved	0
• S7 basic communication, configurable, min.	0
• S7 basic communication, configurable, max.	2
Interfaces	
1st interface	
Interface designation	X1
Type of interface	Integrated RS 485 interface
Hardware	RS 485
• electrically disconnected	No
• Interface power supply (15 V DC to 30 V DC), max.	200 mA
Functionality	
• MPI	Yes
• DP master	No
• DP slave	No
• Point-to-point connection	No
MPI	
Services	
• PG/OP communication	Yes
• Routing	No
• Global data communication	Yes
• S7 basic communication	Yes
• S7 communication	Yes (only server; connection configured at one end)
• S7 communication, as client	No
• S7 communication, as server	Yes
• Transmission rate, max.	187,5 kbps

Technical specifications	
Programming	
Programming language	
• LAD	Yes
• FBD	Yes
• STL	Yes
• SCL	Yes
• GRAPH	Yes
• HiGraph®	Yes
Instruction set	See instruction list
• Nesting levels	8
Know-how protection	
• User program/password security	Yes
• Block encryption	Yes, using S7-Block Privacy
System functions (SFC)	See instruction list
System function blocks (SFB)	See instruction list
Dimensions	
• Mounting dimensions W x H x D (mm)	40 x 125 x 130
• Weight	270 g
Voltages and currents	
• Power supply (rated value)	24 V DC
• Low limit of admissible range (DC)	19.2 V
• High limit of admissible range (DC)	28.8 V
• Current consumption (open-circuit), typically	140 mA
• Inrush current, typ.	3.5 A
• Current consumption (rated value)	650 mA
• I^2t	1 A^2s
• External protection of power supply lines (recommended), min.	2 A
• Power loss, typically	4 W

9.3 CPU 314

Technical specifications of the CPU 314

Table 9- 4 Technical specifications of the CPU 314

Technical specifications	
CPU and version	
• MLFB	6ES7314-1AG14-0AB0
• Hardware version	01
• Firmware version	V3.3
• Associated programming package	STEP 7 as of V5.5 + SP1 or STEP 7 as of V5.2 + SP1 with HSP 218
Memory	
Main memory	
• Integrated	128 KB
• Expandable	No
• Maximum size of non-volatile memory for retentive data blocks	64 KB
Load memory	
• Pluggable (MMC)	Yes
• Pluggable (MMC), max.	8 MB
• Data retention on the Micro Memory Card (after the last programming action), min.	10 years
Backup	
• Available	Yes (ensured with Micro Memory Card - maintenance-free)
• Without battery	Yes (program and data)
Execution times	
• For bit operation, min.	0.06 µs
• For word operations, min.	0.12 µs
• For fixed-point arithmetic, min.	0.16 µs
• Minimum for floating-point arithmetic	0.59 µs
Timers/counters and their retentivity	
S7 counters	
• Number	256
Retentivity	
• Configurable	Yes
• Default	Z 0 to Z 7

Technical specifications	
Counting range	
• Low limit	0
• High limit	999
IEC counter	
• Available	Yes
• Type	SFB
• Number	Unlimited (limited only by main memory size)
S7 timers	
• Number	256
Retentivity	
• Configurable	Yes
• Default	No retentivity
Time setting range	
• Low limit	10 ms
• High limit	9990 s
IEC timer	
• Available	Yes
• Type	SFB
• Number	Unlimited (limited only by main memory size)
Data areas and their retentivity	
Bit memory	
• Number, max.	256 bytes
• Retentivity, available	Yes (MB 0 to MB 255)
• Retentivity, default	MB 0 to MB 15
• Number of clock memories	8 (1 memory byte)
Data blocks	
• Number, max.	1024 (in the number range 1 to 16000)
• Size, max.	64 KB
• Retentivity, configurable	Yes, via non-retain feature on the DB
• Retentivity, default	Yes
Local data	
• Per priority class, max.	32 KB per execution level, 2 KB per block

Technical specifications	
Blocks	
• Number of blocks (total)	1024 (DBs, FCs, FBs) The maximum number of blocks that can be loaded may be reduced due to the Micro Memory Card you are using.
OB	See instruction list
• Size, max.	64 KB
• Number of free cycle OBs	1 (OB 1)
• Number of time-of-day interrupt OBs	1 (OB 10)
• Number of time-delay interrupt OBs	2 (OB 20, 21)
• Number of cyclic interrupt OBs	4 (OB 32, 33, 34, 35)
• Number of hardware interrupt OBs	1 (OB 40)
• Number of restart OBs	1 (OB 100)
• Number of asynchronous error OBs	4 (OB 80, 82, 85,87)
• Number of synchronous error OBs	2 (OB 121, 122)
Nesting depth	
• Per priority class	16
• Additionally within an error OB	4
FB	See instruction list
• Number, max.	1024 (in the number range 0 to 7999)
• Size, max.	64 KB
FC	See instruction list
• Number, max.	1024 (in the number range 0 to 7999)
• Size, max.	64 KB
Address ranges (inputs/outputs)	
I/O address area	
• Inputs	1024 bytes
• Outputs	1024 bytes
I/O process image	
• Inputs	1024 bytes
• Outputs	1024 bytes
• Inputs, adjustable	1024 bytes
• Outputs, adjustable	1024 bytes
• Inputs, preset	128 bytes
• Outputs, preset	128 bytes

Technical specifications	
Digital channels	
• Inputs	1024
• Outputs	1024
• Inputs, of those central	1024
• Outputs, of those central	1024
Analog channels	
• Inputs	256
• Outputs	256
• Inputs, of those central	256
• Outputs, of those central	256
Hardware configuration	
• Racks, max.	4
• Modules per rack, max.	8
Number of DP masters	
• Integrated	0
• Via CP	4
Number of usable FMs and CPs (recommended)	
• FM, max.	8
• CP, point-to-point	8
• CP, LAN	10
Time-of-day	
Clock	
• Hardware clock (real-time)	Yes
• Buffered, can be synchronized	Yes
• Factory setting	DT#1994-01-01-00:00:00
• Buffered period	Typically 6 weeks (at an ambient temperature of 40 °C)
• Behavior of the real-time clock after POWER ON	The clock continues running after POWER OFF
• Behavior after expiration of the buffered period	The clock continues at the time of day it had when power was switched off.
• Deviation per day, max.	10 s, typ. 2 s
Runtime meter	
• Number	1
• Number/number range	0

Technical specifications	
• Range of values	0 to 2^{31} hours (using the SFC 101)
• Granularity	1 hour
• Retentive	Yes; must be manually restarted after every restart
Clock synchronization	
• Supported	Yes
• On MPI, master	Yes
• On MPI, slave	Yes
• On the AS, master	Yes
• On the AS, slave	No
S7 signaling functions	
• Number of stations that can be logged on for signaling functions (e.g. OS)	12 (depends on the number of connections configured for PG/OP and S7 basic communication)
• Process error diagnostic messages	Yes
• Simultaneously enabled interrupt S blocks, max.	300
Test and startup functions	
Status/modify	
• Status/modify variable	Yes
• Variables	Inputs, outputs, bit memories, DBs, timers, counters
• Maximum number of variables	30
• Status variables, max.	30
• Modify variables, max.	14
Forcing	
• Forcing	Yes
• Variables	Inputs/outputs
• Maximum number of tags	10
Status block	Yes (max. 2 blocks simultaneously)
Single step	Yes
• Number of breakpoints	4
Diagnostic buffer	
• Available	Yes
• Maximum number of entries	500
• Configurable	No

Technical specifications	
• Of which are power-failure-proof	100, only the last 100 entries are retentive
• Maximum number of entries that can be read in RUN	499
• Number of entries that can be set in RUN	Yes (from 10 to 499)
• Number of preset entries in RUN	10
Service data	
• Can be read out	Yes
Monitoring function	
• Status LEDs	Yes
Communication functions	
PG/OP communication	Yes
Prioritized OCM communication	
• supported	No
Routing	No
• Number of routing connections	-
• Data record routing	No
Global data communication	
• Supported	Yes
• Number of GD circles, max.	8
• Number of GD packages, max.	8
• Number of GD packages, sender, max.	8
• Number of GD packages, receiver, max.	8
• Size of GD packages, max.	22 bytes
• Size of GD packages, of those consistent, max.	22 bytes
S7 basic communication	
• Supported	Yes
• User data per job, max.	76 bytes
• User data per job, consistent, max.	76 bytes (for X_SEND/RCV); 64 bytes (for X_PUT/GET as server)
S7 communication	
• Supported	Yes
• As server	Yes
• As client	Yes (via CP and loadable FBs)
• User data per job, max.	180 bytes (with PUT / GET)
• User data per job, consistent	240 bytes

Technical specifications	
S5-compatible communication	
• Supported	Yes (via CP and loadable FCs)
Number of connections	
• Total	12
Suitable for PG communication	11
• PG communication, reserved	1
• PG communication, configurable, min.	1
• PG communication, configurable, max.	11
Suitable for OP communication	11
• OP communication, reserved	1
• OP communication, configurable, min.	1
• OP communication, configurable, max.	11
Suitable for S7 basic communication	8
• S7 basic communication, reserved	0
• S7 basic communication, configurable, min.	0
• S7 basic communication, configurable, max.	8
Interfaces	
1st interface	
Interface designation	X1
Type of interface	Integrated RS 485 interface
Hardware	RS 485
• electrically disconnected	No
• Interface power supply (15 V DC to 30 V DC), max.	200 mA
Functionality	
• MPI	Yes
• DP master	No
• DP slave	No
• Point-to-point connection	No
MPI	
Services	
• PG/OP communication	Yes
• Routing	No
• Global data communication	Yes
• S7 basic communication	Yes
• S7 communication	Yes (server only, connections configured at one end)

Technical specifications	
• S7 communication, as client	No
• S7 communication, as server	Yes
Transmission rate, max.	187,5 kbps
Programming	
Programming language	
• LAD	Yes
• FBD	Yes
• STL	Yes
• SCL	Yes
• CFC	Yes
• GRAPH	Yes
• HiGraph®	Yes
Instruction set	See instruction list
• Nesting levels	8
Know-how protection	
• User program/password security	Yes
• Block encryption	Yes, using S7-Block Privacy
System functions (SFC)	See instruction list
System function blocks (SFB)	See instruction list
Dimensions	
• Mounting dimensions W x H x D (mm)	40 x 125 x 130
• Weight	280 g
Voltages and currents	
• Power supply (rated value)	24 V DC
• Low limit of admissible range (DC)	19.2 V
• High limit of admissible range (DC)	28.8 V
• Current consumption (open-circuit), typically	140 mA
• Inrush current, typ.	3.5 A
• Current consumption (rated value)	650 mA
• I^2t	1 A^2s
• External protection of power supply lines (recommended), min.	2 A
• Power loss, typically	4 W

9.4 CPU 315-2 DP

Technical specifications

Table 9- 5 Technical specifications of the CPU 315-2 DP

Technical specifications	
CPU and version	
• MLFB	6ES7315-2AH14-0AB0
• Hardware version	01
• Firmware version	V3.3
• Associated programming package	STEP 7 as of V5.5 + SP1 or STEP 7 as of V5.2 + SP1 with HSP 218
Memory	
Main memory	
• Integrated	256 KB
• Expandable	No
• Maximum size of non-volatile memory for retentive data blocks	128 KB
Load memory	
• Pluggable (MMC)	Yes
• Pluggable (MMC), max.	8 MB
• Data retention on the Micro Memory Card (after the last programming action), min.	10 years
Backup	
• Available	Yes (ensured with Micro Memory Card - maintenance-free)
• Without battery	Yes (program and data)
Execution times	
• For bit operation, min.	0.05 µs
• For word operations, min.	0.09 µs
• For fixed-point arithmetic, min.	0.12 µs
• Minimum for floating-point arithmetic	0.45 µs
Timers/counters and their retentivity	
S7 counters	
• Number	256
Retentivity	
• Configurable	Yes
• Default	Z 0 to Z 7

Technical specifications	
Counting range	
• Low limit	0
• High limit	999
IEC counter	
• Available	Yes
• Type	SFB
• Number	Unlimited (limited only by main memory size)
S7 timers	
• Number	256
Retentivity	
• Configurable	Yes
• Default	No retentivity
Time setting range	
• Low limit	10 ms
• High limit	9990 s
IEC timer	
• Available	Yes
• Type	SFB
• Number	Unlimited (limited only by main memory size)
Data areas and their retentivity	
Bit memory	
• Number, max.	2048 bytes
• Retentivity, available	Yes (MB 0 to MB 2047)
• Retentivity, default	MB 0 to MB 15
• Number of clock memories	8 (1 memory byte)
Data blocks	
• Number, max.	1024 (in the number range 1 to 16000)
• Size, max.	64 KB
• Retentivity, configurable	Yes, via non-retain feature on the DB
• Retentivity, default	Yes
Local data	
• Per priority class, max.	32 KB per execution level, 2 KB per block

Technical specifications	
Blocks	
• Number of blocks (total)	1024 (DBs, FCs, FBs) The maximum number of blocks that can be loaded may be reduced due to the Micro Memory Card you are using.
OB	See instruction list
• Size	64 KB
• Number of free cycle OBs	1 (OB 1)
• Number of time-of-day interrupt OBs	1 (OB 10)
• Number of time-delay interrupt OBs	2 (OB 20, 21)
• Number of cyclic interrupt OBs	4 (OB 32, 33, 34, 35)
• Number of hardware interrupt OBs	1 (OB 40)
• Number of DPV1 interrupt OBs	3 (OB 55, 56, 57)
• Number of isochronous interrupt OBs	1 (OB 61)
• Number of restart OBs	1 (OB 100)
• Number of asynchronous error OBs	5 (OB 80, 82, 85, 86, 87)
• Number of synchronous error OBs	2 (OB 121, 122)
Nesting depth	
• Per priority class	16
• Additionally within an error OB	4
FB	See instruction list
• Number, max.	1024 (in the number range 0 to 7999)
• Size, max.	64 KB
FC	See instruction list
• Number, max.	1024 (in the number range 0 to 7999)
• Size, max.	64 KB
Address ranges (inputs/outputs)	
I/O address area	
• Inputs	2048 bytes (freely addressable)
• Outputs	2048 bytes (freely addressable)
Distributed	
• Inputs	2048 bytes
• Outputs	2048 bytes
I/O process image	
• Inputs	2048 bytes

Technical specifications	
• Outputs	2048 bytes
• Inputs, adjustable	2048 bytes
• Outputs, preset	2048 bytes
• Inputs, adjustable	128 bytes
• Outputs, preset	128 bytes
Process image partitions	
• Number of partial process images, max.	1
Digital channels	
• Inputs	16384
• Outputs	16384
• Inputs, of those central	1024
• Outputs, of those central	1024
Analog channels	
• Inputs	1024
• Outputs	1024
• Inputs, of those central	256
• Outputs, of those central	256
Hardware configuration	
• Racks, max.	4
• Modules per rack, max.	8
Number of DP masters	
• Integrated	1
• Via CP	4
Number of usable FMs and CPs (recommended)	
• FM	8
• CP, point-to-point	8
• CP, LAN	10
Time-of-day	
Clock	
• Hardware clock (real-time)	Yes
• Buffered, can be synchronized	Yes
• Buffered period	Typically 6 weeks (at an ambient temperature of 40 °C)
• Behavior of the real-time clock after POWER ON	The clock continues running after POWER OFF

Technical specifications	
• Behavior after expiration of the buffered period	The clock continues at the time of day it had when power was switched off.
• Deviation per day, max.	10 s, typ. 2 s
Runtime meter	
• Number	1
• Number/number range	0
• Range of values	0 to 2^{31} hours (if SFC 101 is used)
• Granularity	1 hour
• Retentive	Yes; must be manually restarted after every restart
Clock synchronization	
• Supported	Yes
• On MPI, master	Yes
• On MPI, slave	Yes
• On DP, master	Yes (DP slave must be time slave)
• On DP, slave	Yes
• On the AS, master	Yes
• On the AS, slave	No
S7 signaling functions	
• Number of stations that can be logged on for signaling functions (e.g. OS)	16 (depends on the number of connections configured for PG/OP and S7 basic communication)
• Process error diagnostic messages	Yes
• Simultaneously enabled interrupt S blocks, max.	300
Test and startup functions	
Status/modify	
• Status/modify variable	Yes
• Variables	Inputs, outputs, bit memories, DBs, timers, counters
• Maximum number of variables	30
• Status variables, max.	30
• Modify variables, max.	14
Forcing	
• Forcing	Yes
• Variables	Inputs, outputs

Technical specifications	
• Maximum number of tags	10
Status block	Yes (max. 2 blocks simultaneously)
Single step	Yes
• Number of breakpoints	4
Diagnostic buffer	
• Available	Yes
• Maximum number of entries	500
• Configurable	No
• Of which are power-failure-proof	100, only the last 100 entries are retentive
• Maximum number of entries that can be read in RUN	499
• Number of entries that can be set in RUN	Yes (from 10 to 499)
• Number of preset entries in RUN	10
Service data	
• Can be read out	Yes
Monitoring function	
• Status LEDs	Yes
Communication functions	
PG/OP communication	Yes
Prioritized OCM communication	
• Supported	Yes
Routing	Yes
• Number of routing connections, max.	4
• Data record routing	Yes
Global data communication	
• Supported	Yes
• Number of GD circles, max.	8
• Number of GD packages, max.	8
• Number of GD packages, sender, max.	8
• Number of GD packages, receiver, max.	8
• Size of GD packages, max.	22 bytes
• Size of GD packages, of those consistent, max.	22 bytes
S7 basic communication	
• Supported	Yes
• User data per job, max.	76 bytes

Technical specifications	
• User data per job, consistent, max.	76 bytes (for X_SEND/RCV); 64 bytes (for X_PUT/GET as server)
S7 communication	
• Supported	Yes
• As server	Yes
• As client	Yes (via CP and loadable FBs)
• User data per job, max.	180 bytes (for PUT/GET)
• User data per job, consistent, max.	240 bytes (as server)
S5-compatible communication	
• Supported	Yes (via CP and loadable FCs)
Number of connections	
• Total	16
Suitable for PG communication	15
• PG communication, reserved	1
• PG communication, configurable, min.	1
• PG communication, configurable, max.	15
Suitable for OP communication	15
• OP communication, reserved	1
• OP communication, configurable, min.	1
• OP communication, configurable, max.	15
Suitable for S7 basic communication	12
• S7 basic communication, reserved	0
• S7 basic communication, configurable, min.	0
• S7 basic communication, configurable, max.	12
Interfaces	
1st interface	
Interface designation	X1
Type of interface	Integrated RS 485 interface
Hardware	RS 485
• electrically disconnected	No
• Interface power supply (15 V DC to 30 V DC), max.	200 mA
Functionality	
• MPI	Yes
• DP master	No
• DP slave	No

Technical specifications	
• Point-to-point connection	No
MPI	
Services	
• PG/OP communication	Yes
• Routing	Yes
• Global data communication	Yes
• S7 basic communication	Yes
• S7 communication	Yes (server only, connections configured at one end)
• S7 communication, as client	No
• S7 communication, as server	Yes
Transmission rate	187,5 kbps
2nd interface	
Interface designation	X2
Type of interface	Integrated RS 485 interface
Hardware	RS 485
• electrically disconnected	Yes
• Interface power supply (15 V DC to 30 V DC), max.	200 mA
Functionality	
• MPI	No
• DP master	Yes
• DP slave	Yes
• Point-to-point connection	No
DP master	
Services	
• PG/OP communication	Yes
• Routing	Yes
• Global data communication	No
• S7 basic communication	Yes (intelligent blocks only)
• S7 communication	Yes (server only, connections configured at one end)
• S7 communication, as client	No
• S7 communication, as server	Yes
• Constant bus cycle time supported	Yes
• Isochronous mode	Yes, OB61

Technical specifications	
• Direct data exchange (cross-traffic)	Yes (as subscriber)
• SYNC/FREEZE	Yes
• Enable/disable DP slaves – Max. number of DP slaves that can be enabled/ disabled simultaneously	Yes 8
• DPV1	Yes
Transmission rate, max.	12 Mbps
Number of DP slaves, max.	124
Address range	
• Inputs, max.	2048 bytes
• Outputs, max.	2048 bytes
User data per DP slave	
• Inputs, max.	244 bytes
• Outputs, max.	244 bytes
DP slave	
Services	
• PG/OP communication	Yes
• Routing	Yes (only if interface is active)
• Global data communication	No
• S7 basic communication	No
• S7 communication	Yes (only server; connection configured at one end)
• S7 communication, as client	No
• S7 communication, as server	Yes
• Direct data exchange (cross-traffic)	Yes
• DPV1	No
Transmission rate, max.	12 Mbps
Automatic baud rate detection	Yes (only if interface is passive)
GSD file	The current GSD file is available for download at GSD file (http://www.siemens.com/profibus-gsd)
Transfer memory	
• Inputs	244 bytes
• Outputs	244 bytes
• Address areas, max.	32
• User data per address range, max.	32 bytes

Technical specifications	
Programming	
Programming language	
• LAD	Yes
• FBD	Yes
• STL	Yes
• SCL	Yes
• CFC	Yes
• GRAPH	Yes
• HiGraph®	Yes
Instruction set	See instruction list
• Nesting levels	8
Know-how protection	
• User program/password security	Yes
• Block encryption	Yes, using S7-Block Privacy
System functions (SFC)	See instruction list
System function blocks (SFB)	See instruction list
Dimensions	
• Mounting dimensions W x H x D (mm)	40 x 125 x 130
• Weight	290 g
Voltages and currents	
• Power supply (rated value)	24 V DC
• Low limit of admissible range (DC)	19.2 V
• High limit of admissible range (DC)	28.8 V
• Current consumption (open-circuit), typically	150 mA
• Inrush current, typ.	3.5 A
• Current consumption (rated value)	850 mA
• I^2t	1 A^2s
• External protection of power supply lines (recommended), min.	2 A
• Power loss, typically	4.5 W

9.5 CPU 315-2 PN/DP

Technical specifications

Table 9- 6 Technical specifications of the CPU 315-2 PN/DP

Technical specifications	
CPU and version	
• MLFB	6ES7315-2EH14-0AB0
• Hardware version	01
• Firmware version	V3.2.1
• Associated programming package	STEP 7 as of V5.5 + HSP 199
Memory	
Main memory	
• Integrated	384 KB
• Expandable	No
• Maximum size of non-volatile memory for retentive data blocks,	128 KB
Load memory	
• Pluggable (MMC)	Yes
• Pluggable (MMC), max.	8 MB
• Data retention on the Micro Memory Card (after the last programming action), min.	10 years
Backup	
• Available	Yes (ensured with Micro Memory Card - maintenance-free)
• Without battery	Yes (program and data)
Execution times	
• for bit operation, min.	0.05 µs
• for word operations, min.	0.09 µs
• For fixed-point arithmetic, min.	0.12 µs
• For floating-point arithmetic, min.	0.45 µs
Timers/counters and their retentivity	
S7 counters	
• Number	256
Retentivity	
• Configurable	Yes
• Default	Z 0 to Z 7

Technical specifications	
Counting range	
• Low limit	0
• High limit	999
IEC counter	
• Available	Yes
• Type	SFB
• Number	Unlimited (limited only by main memory size)
S7 timers	
• Number	256
Retentivity	
• Configurable	Yes
• Default	No retentivity
Time setting range	
• Low limit	10 ms
• High limit	9990 s
IEC timer	
• Available	Yes
• Type	SFB
• Number	Unlimited (limited only by main memory size)
Data areas and their retentivity	
Bit memory	
• Number, max.	2048 bytes
• Retentivity, available	Yes (from MB 0 to MB 2047)
• Retentivity, default	MB 0 to MB 15
• Number of clock memories	8 (1 memory byte)
Data blocks	
• Number, max.	1024 (in the number range 1 to 16000)
• Size, max.	64 KB
• Retentivity, configurable	Yes, via non-retain feature on the DB
• Retentivity, default	Yes
Local data	
• Per priority class, max.	32 KB per execution level, 2 KB per block

Technical specifications	
Blocks	
• Number of blocks (total)	1024 (DBs, FCs, FBs) The maximum number of blocks that can be loaded may be reduced due to the Micro Memory Card you are using.
OB	See instruction list
• Size, max.	64 KB
• Number of free cycle OBs	1 (OB 1)
• Number of time-of-day interrupt OBs	1 (OB 10)
• Number of time-delay interrupt OBs	2 (OB 20, 21)
• Number of cyclic interrupt OBs	4 (OB 32, 33, 34, 35)
• Number of hardware interrupt OBs	1 (OB 40)
• Number of DPV1 interrupt OBs	3 (OB 55, 56, 57)
• Number of isochronous interrupt OBs	1 (OB 61)
• Number of restart OBs	1 (OB 100)
• Number of asynchronous error OBs	6 (OB 80, 82, 83, 85, 86, 87) (OB83 for PROFINET IO)
• Number of synchronous error OBs	2 (OB 121, 122)
Nesting depth	
• Per priority class	16
• Additionally within an error OB	4
FB	See instruction list
• Number, max.	1024 (in the number range 0 to 7999)
• Size	64 KB
FC	See instruction list
• Number, max.	1024 (in the number range 0 to 7999)
• Size	64 KB
Address ranges (inputs/outputs)	
I/O address area	
• Inputs	2048 bytes
• Outputs	2048 bytes
Distributed	
• Inputs	2048 bytes
• Outputs	2048 bytes
I/O process image	
• Inputs	2048 bytes

Technical specifications	
• Outputs	2048 bytes
• Inputs, adjustable	2048 bytes
• Outputs, adjustable	2048 bytes
• Inputs, preset	128 bytes
• Outputs, preset	128 bytes
Process image partitions	
• Number of partial process images, max.	1
• Amount of user data in the process image partition for isochronous PROFINET IO, max.	1600 bytes
Digital channels	
• Inputs	16384
• Outputs	16384
• Inputs, of those central	1024
• Outputs, of those central	1024
Analog channels	
• Inputs	1024
• Outputs	1024
• Inputs, of those central	256
• Outputs, of those central	256
Hardware configuration	
• Racks, max.	4
• Modules per rack, max.	8
Number of DP masters	
• Integrated	1
• Via CP	4
Number of usable FMs and CPs (recommended)	
• FM	8
• CP, point-to-point	8
• CP, LAN	10
Time	
Clock	
• Hardware clock (real-time)	Yes
• Buffered, can be synchronized	Yes
• Factory setting	DT#1994-01-01-00:00:00

Technical specifications	
• Buffered period	Typically 6 weeks (at an ambient temperature of 40 °C)
• Behavior of the clock on expiration of the buffered period	The clock continues at the time of day it had when power was switched off.
• Behavior of the real-time clock after POWER ON	The clock continues running after POWER OFF.
• Deviation per day, max.	10 s, typ. 2 s
Runtime meter	
• Number	1
• Number/number range	0
• Range of values	0 to 2^{31} hours (using the SFC 101)
• Granularity	1 hour
• Retentive	Yes; must be manually restarted after every restart
Clock synchronization	
• supported	Yes
• On MPI, master	Yes
• On MPI, slave	Yes
• On DP, master	Yes (DP slave must be time slave)
• On DP, slave	Yes
• On the AS, master	Yes
• On the AS, slave	Yes
• On Ethernet via NTP	Yes (as client)
S7 signaling functions	
• Number of stations that can be logged on for signaling functions, max.	16 (depends on the number of connections configured for PG/OP and S7 basic communication)
• Process error diagnostic messages	Yes
• Simultaneously enabled interrupt S blocks, max.	300
Test and startup functions	
Status/modify	
• Status/modify variable	Yes
• Variables	Inputs, outputs, bit memories, DBs, timers, counters
• Maximum number of variables	30
• of those status variables, max.	30

Technical specifications	
• Modify variables, max.	14
Forcing	
• Forcing	Yes
• Variables	Inputs, outputs
• Maximum number of tags	10
Status block	Yes (max. 2 blocks simultaneously)
Single step	Yes
• Number of breakpoints	4
Diagnostic buffer	
• Available	Yes
• No. of entries, max.	500
• Configurable	No
• of which are power-failure-proof	100, only the last 100 entries are retentive
• Maximum number of entries that can be read in RUN	499
• Number of entries that can be set in RUN	Yes (from 10 to 499)
• Number of preset entries in RUN	10
Service data	
• Can be read out	Yes
Monitoring function	
• Status LEDs	Yes
Communication functions	
PG/OP communication	Yes
Prioritized OCM communication	
• Supported	Yes
Routing	Yes
• Number of routing connections	X1 as MPI max. 10; X1 as DP master max. 24 X1 as DP slave (active) max. 14 X2 as PROFINET max. 24
• Data record routing	Yes
Global data communication	
• Supported	Yes
• Number of GD circles, max.	8
• Number of GD packets, max.	8
• Number of GD packets, sender, max.	8
• Number of GD packets, receiver, max.	8

Technical specifications	
• Size of GD packets, max.	22 bytes
• Size of GD packets, of those consistent, max.	22 bytes
S7 basic communication	
• Supported	Yes
• User data per job, max.	76 bytes
• User data per job, consistent, max.	76 Bytes (for X-SEND/REC), 64 bytes (for X-PUT/GET as server)
S7 communication	
• Supported	Yes
• As server	Yes
• As client	Yes (via integrated PN interface and loadable FBs, or via CP and loadable FBs)
• User data per job	See the STEP 7 Online Help, *Common parameters of SFBs/FBs and SFC/FC of the S7 communication)*
S5-compatible communication	
• Supported	Yes (via CP and loadable FCs)
Web server	
• Supported	Yes
• Number of HTTP clients	5
• User-defined web pages	Yes
Open IE communication	
• Supported	Yes
• Maximum number of connections/access points	8
• Local port number used at the system end	0, 20, 21, 23, 25, 102, 135, 161, 8080, 34962, 34963, 34964, 65532, 65533, 65534, 65535
TCP/IP	Yes (via integrated PROFINET interface and loadable FBs)
• Maximum number of connections	8
• Data length for connection type 01_H, max.	1460 bytes
• Data length for connection type 11_H, max.	32768 bytes
• Multiple passive connections per port (multiport), supported	Yes
ISO on TCP	Yes (via integrated PROFINET interface and loadable FBs)
• Maximum number of connections	8
• Data length, max.	32768 bytes

Technical specifications	
UDP	Yes (via integrated PROFINET interface and loadable FBs)
• Maximum number of connections	8
• Data length, max.	1472 bytes
iPAR server	
• Supported	Yes
Number of connections	
• Total	16
Suitable for PG communication	15
• PG communication, reserved	1
• PG communication, configurable, min.	1
• PG communication, configurable, max.	15
Suitable for OP communication	15
• OP communication, reserved	1
• OP communication, configurable, min.	1
• OP communication, configurable, max.	15
Suitable for S7 basic communication	14
• S7 basic communication, reserved	0
• S7 basic communication, configurable, min.	0
• S7 basic communication, configurable, max.	14
Suitable for S7 communication	14
• S7 communication, reserved	0
• S7 communication, configurable, min.	0
• S7 communication, configurable, max.	14
Total number of instances, max.	32
PROFINET CBA (with communication load setpoint)	
• Reference setting for CPU communication	50 %
• Number of remote interconnecting partners	32
• Number of master/slave functions	30
• Total of all master/slave connections	1000
• Data length of all incoming master/slave connections, max.	4000 bytes
• Data length of all outgoing master/slave connections, max.	4000 bytes
• Number of device-internal and PROFIBUS interconnections	500

Technical specifications	
• Data length of the device-internal and PROFIBUS interconnections, max.	4000 bytes
• Data length per connection, max.	1400 bytes
Remote interconnections with acyclic transmission	
• Sampling rate: Sampling time, min.	500 ms
• Number of incoming interconnections	100
• Number of outgoing interconnections	100
• Data length of all incoming interconnections, max.	2000 bytes
• Data length of all outgoing interconnections, max.	2000 bytes
• Data length per connection (acyclic interconnections), max.	1400 bytes
Remote interconnections with cyclic transmission	
• Transmission frequency: Minimum transmission interval	10 ms
• Number of incoming interconnections	200
• Number of outgoing interconnections	200
• Data length of all incoming interconnections, max.	2000 bytes
• Data length of all outgoing interconnections, max.	2000 bytes
• Data length per connection (acyclic interconnections), max.	450 bytes
HMI variables via PROFINET (acyclic)	
• HMI variables update	500 ms
• Number of stations that can be logged on for HMI variables (PN OPC/iMAP)	3, 2xPN OPC/1x iMAP
• Number of HMI variables	200
• Data length of all HMI variables, max.	2000 bytes
PROFIBUS proxy functionality	
• Supported	Yes
• Number of coupled PROFIBUS devices	16
• Data length per connection, max.	240 bytes (slave dependent)
Interfaces	
1st interface	
Interface designation	X1
Type of interface	Integrated RS 485 interface

Technical specifications	
Hardware	RS 485
• electrically disconnected	Yes
• Interface power supply (15 V DC to 30 V DC), max.	200 mA
Functionality	
• MPI	Yes
• DP master	Yes
• DP slave	Yes
• Point-to-point connection	No
MPI	
Services	
• PG/OP communication	Yes
• Routing	Yes
• Global data communication	Yes
• S7 basic communication	Yes
• S7 communication	Yes (server only; connection configured at one end)
• S7 communication, as client	No (but via CP and loadable FBs)
• S7 communication, as server	Yes
Transmission rate, max.	12 Mbps
DP master	
Services	
• PG/OP communication	Yes
• Routing	Yes
• Global data communication	No
• S7 basic communication	Yes (intelligent blocks only)
• S7 communication	Yes (server only; connection configured at one end)
• Constant bus cycle time supported	Yes
• Isochronous mode	Yes, OB 61 (isochronous mode can be used only alternatively on PROFIBUS DP or PROFINET IO)
• SYNC/FREEZE	Yes
• Activation/deactivation of DP slaves – Max. number of DP slaves that can be enabled / disabled simultaneously	Yes 8
• Direct data exchange (cross-traffic)	Yes (as subscriber)
• DPV1	Yes

Technical specifications	
Transmission rate, max.	12 Mbps
Number of DP slaves, max.	124
Address range	
• Inputs, max.	2 KB
• Outputs, max.	2 KB
User data per DP slave	
• Inputs, max.	244 bytes
• Outputs, max.	244 bytes
DP slave	
Services	
• PG/OP communication	Yes
• Routing	Yes (only if interface is active)
• Global data communication	No
• S7 basic communication	No
• S7 communication	Yes (server only; connection configured at one end)
• Direct data exchange (cross-traffic)	Yes
• DPV1	No
Transmission rate, max.	12 Mbps
Automatic baud rate detection	Yes (only if interface is passive)
Transfer memory	
• Inputs	244 bytes
• Outputs	244 bytes
• Address range, max.	32
• User data per address range, max.	32 bytes
GSD file	The current GSD file is available for download from the Internet (http://www.siemens.com/profibus-gsd).
2nd interface	
Interface designation	X2
Type of interface	PROFINET
Hardware	Ethernet RJ 45
• electrically disconnected	Yes
• Integrated switch	Yes
• Number of ports	2
• Automatic determination of the transmission rate	Yes (10/100 Mbps)
• Autonegotiation	Yes

Technical specifications	
• Autocrossing	Yes
Media redundancy	
• Supported	Yes
• Changeover time on line break, typically	200 ms (PROFINET MRP)
• Number of nodes on the ring, max.	50
Change of the IP address at runtime, supported	Yes
Keep-alive function, supported	Yes
Functionality	
• MPI	No
• DP master	No
• DP slave	No
• PROFINET IO controller	Yes, even simultaneously with IO device functionality
• PROFINET IO device	Yes, even simultaneously with IO controller functionality
• PROFINET CBA	Yes (acyclic and cyclic transmission)
• Open IE communication	Yes; via TCP/IP, ISO on TCP, UDP
• Web server – Number of HTTP clients	Yes 5
PROFINET IO controller	
Services	
• PG/OP communication	Yes
• Routing	Yes
• S7 communication	Yes (with loadable FBs, max. configurable connections: 14; maximum number of instances: 32)
• Open IE communication	Yes; via TCP/IP, ISO on TCP, UDP
Number of integrated PROFINET IO controllers	1
RT, supported	Yes
IRT, supported	Yes
Transmission rate, max.	100 Mbps
Maximum number of connectable IO devices	128
Number of connectable IO devices, for RT, max.	128
• of which in line, max.	128
Number of IO devices with IRT and "high flexibility" option	128
• of which in line, max.	61
Number of IO devices with IRT and "high performance" option, max.	64

Technical specifications	
• of which in line, max.	64
Shared Device, supported	Yes
Isochronous mode	Yes (OB 61 - operation in isochronous mode is possible either on DP, or on PROFINET IO (not concurrently))
Prioritized startup, supported	Yes
• Maximum number of IO devices with prioritized startup	32
Activating/deactivating of PROFINET IO Devices	Yes
• Number of IO devices that can be enabled / disabled simultaneously, max.	8
IO devices changing during runtime (partner ports), supported	Yes
• Number of IO devices per tool, max.	8
Device replacement without removable medium	Yes
Send clocks	250 µs, 500 µs,1 ms
	2 ms, 4 ms (not for IRT with "high flexibility" option)
Update time	
• Update times	The minimum update time also depends on the time slice set for PROFINET IO communication, the number of IO Devices used, and on the amount of configured user data.
With RT	
• for send clock of 250 µs	250 µs to 128 ms
• for send clock of 500 µs	500 µs to 256 ms
• for send clock of 1 ms	1 ms to 512 ms
• for send clock of 2 ms	2 ms to 512 ms
• for send clock of 4 ms	4 ms to 512 ms
For IRT with "high flexibility" option	
• for send clock of 250 µs	250 µs to 128 ms
• for send clock of 500 µs	500 µs to 256 ms
• for send clock of 1 ms	1 ms to 512 ms
For IRT with "high performance" option	
• for send clock of 250 µs	250 µs to 4 ms
• for send clock of 500 µs	500 µs to 8 ms
• for send clock of 1 ms	1 ms to 16 ms
• for send clock of 2 ms	2 ms to 32 ms
• for send clock of 4 ms	4 ms to 64 ms

Technical specifications	
For IRT with "high performance" option and parameter assignment for "odd-numbered" send clocks	Update time = "odd-numbered" send clock set (any multiple of 125 µs: 375 µs, 625 µs to 3.875 ms
Address range	
• Inputs, max.	2 KB
• Outputs, max.	2 KB
User data per address range, max.	
• User data consistency, max.	1024 bytes
PROFINET intelligent IO device	
Services	
• PG/OP communication	Yes
• S7 routing	Yes
• S7 communication	Yes (with loadable FBs, max. configurable connections: 14, maximum number of instances: 32
• Open IE communication	Yes; via TCP/IP, ISO on TCP, UDP
RT, supported	Yes
IRT, supported	Yes
PROFIenergy, supported	*Prepared with SFB 73 / 74 for loadable PROFIenergy standard FBs for intelligent IO devices*
Shared Device, supported	Yes
• Number of IO controllers for shared devices, max.	2
Isochronous mode	No
Application transfer areas	Yes
IO devices transfer area	No
Transfer memory	
• Inputs, max.	1440 bytes, per controller for shared devices
• Outputs, max.	1440 bytes, per controller for shared devices
Submodules	
• Number, max.	64
• User data per submodule, max.	1024 bytes
Programming	
Programming language	
• LAD	Yes
• FBD	Yes
• STL	Yes
• SCL	Yes

Technical specifications	
• CFC	Yes
• GRAPH	Yes
• HiGraph®	Yes
Instruction set	See instruction list
• Nesting levels	8
Know-how protection	
• User program/password security	Yes
• Block encryption	Yes, using S7-Block Privacy
System functions (SFC)	See instruction list
System function blocks (SFB)	See instruction list
Dimensions	
• Mounting dimensions W x H x D (mm)	40 x 125 x 130
• Weight	340 g
Voltages and currents	
• Power supply (rated value)	24 V DC
• Low limit of admissible range (DC)	19.2 V
• High limit of admissible range (DC)	28.8 V
• Current consumption (open-circuit), typically	150 mA
• Current consumption (rated value)	750 mA
• Inrush current, typ.	4 A
• I^2t	1 A^2s
• External protection of power supply lines (recommended), min.	2 A
• Power loss, typically	4.65 W

9.6 CPU 317-2 DP

Technical specifications

Table 9- 7 Technical specifications of the CPU 317-2 DP

Technical specifications	
CPU and version	
• MLFB	6ES7317-2AK14-0AB0
• Hardware version	01
• Firmware version	V3.3
• Associated programming package	STEP 7 as of V5.5 + SP1 or STEP 7 as of V5.2 + SP1 with HSP 202
Memory	
Main memory	
• Integrated	1 MB
• Expandable	No
• Maximum size of non-volatile memory for retentive data blocks	256 KB
Load memory	
• Pluggable (MMC)	Yes
• Pluggable (MMC), max.	8 MB
• Data retention on the Micro Memory Card (after the last programming action), min.	10 years
Backup	
• Available	Yes (ensured with Micro Memory Card - maintenance-free)
• Without battery	Yes (program and data)
Execution times	
• For bit operation, min.	0.025 µs
• For word operations, min.	0.03 µs
• For fixed-point arithmetic, min.	0.04 µs
• For floating-point arithmetic, min.	0.16 µs
Timers/counters and their retentivity	
S7 counters	
• Number	512
Retentivity	
• Configurable	Yes
• Default	Z 0 to Z 7

Technical specifications	
Counting range	
• Low limit	0
• High limit	999
IEC counter	
• Available	Yes
• Type	SFB
• Number	Unlimited (limited only by main memory size)
S7 timers	
• Number	512
Retentivity	
• Configurable	Yes
• Default	No retentivity
Time setting range	
• Low limit	10 ms
• High limit	9990 s
IEC timer	
• Available	Yes
• Type	SFB
• Number	Unlimited (limited only by main memory size)
Data areas and their retentivity	
Bit memory	
• Number, max.	4096 bytes
• Retentivity, available	Yes (MB 0 to MB 4095)
• Retentivity, default	MB 0 to MB 15
• Number of clock memories	8 (1 memory byte)
Data blocks	
• Number, max.	2048 (in the number range 1 to 16000)
• Size, max.	64 KB
• Retentivity, configurable	Yes, via non-retain feature on the DB
• Retentivity, default	Yes
Local data	
• Per priority class, max.	32 KB per execution level, 2 KB per block

Technical specifications	
Blocks	
• Number of blocks (total)	2048 (DBs, FCs, FBs) The maximum number of blocks that can be loaded may be reduced due to the Micro Memory Card you are using.
OB	See instruction list
• Size, max.	64 KB
• Number of free cycle OBs	1 (OB 1)
• Number of time-of-day interrupt OBs	1 (OB 10)
• Number of time-delay interrupt OBs	2 (OB 20, 21)
• Number of cyclic interrupt OBs	4 (OB 32, 33, 34, 35)
• Number of hardware interrupt OBs	1 (OB 40)
• Number of DPV1 interrupt OBs	3 (OB 55, 56, 57)
• Number of isochronous interrupt OBs	1 (OB 61)
• Number of restart OBs	1 (OB 100)
• Number of asynchronous error OBs	5 (OB 80, 82, 85, 86, 87)
• Number of synchronous error OBs	2 (OB 121, 122)
Nesting depth	
• Per priority class	16
• Additionally within an error OB	4
FB	See instruction list
• Number, max.	2048 (in the number range 0 to 7999)
• Size, max.	64 KB
FC	See instruction list
• Number, max.	2048 (in the number range 0 to 7999)
• Size, max.	64 KB
Address ranges (inputs/outputs)	
I/O address area	
• Inputs, max.	8192 bytes (freely addressable)
• Outputs, max.	8192 bytes (freely addressable)
Distributed	
• Inputs	8192 bytes
• Outputs	8192 bytes
I/O process image	
• Inputs	8192 bytes

Technical specifications	
• Outputs	8192 bytes
• Inputs, adjustable	8192 bytes
• Outputs, adjustable	8192 bytes
• Inputs, preset	256 bytes
• Outputs, preset	256 bytes
Process image partitions	
• Number of partial process images, max.	1
Digital channels	
• Inputs, max.	65636
• Outputs, max.	65636
• Inputs, of those central	1024
• Outputs, of those central	1024
Analog channels	
• Inputs, max.	4096
• Outputs, max.	4096
• Inputs, of those central, max.	256
• Outputs, of those central, max.	256
Hardware configuration	
• Racks, max.	4
• Modules per rack, max.	8
Number of DP masters	
• Integrated	2
• Via CP	4
Number of usable FMs and CPs (recommended)	
• FM	8
• CP, point-to-point	8
• CP, LAN	10
Time-of-day	
Clock	
• Hardware clock (real-time)	Yes
• Buffered, can be synchronized	Yes
• Factory setting	DT#1994-01-01-00:00:00
• Buffered period	Typically 6 weeks (at an ambient temperature of 40 °C)

Technical specifications	
• Behavior of the real-time clock after POWER ON	The clock continues running after POWER OFF
• Behavior after expiration of the buffered period	The clock continues at the time of day it had when power was switched off.
• Deviation per day, max.	10 s, typ. 2 s
Runtime meter	
• Number	4
• Number/number range	0 to 3
• Range of values	0 to 2^{31} hours (using the SFC 101)
• Granularity	1 hour
• Retentive	Yes; must be manually restarted after every restart
Clock synchronization	
• Supported	Yes
• On MPI, master	Yes
• On MPI, slave	Yes
• On DP, master	Yes (DP slave must be time slave)
• On DP, slave	Yes
• On the AS, master	Yes
• On the AS, slave	Yes
S7 signaling functions	
• Number of stations that can be logged on for signaling functions, max.	32 (depends on the number of connections configured for PG/OP and S7 basic communication)
• Process error diagnostic messages	Yes
• Simultaneously enabled interrupt S blocks, max.	300
Test and startup functions	
Status/modify	
• Status/modify variable	Yes
• Variables	Inputs, outputs, bit memories, DBs, timers, counters
• Maximum number of variables	30
• Status variables, max.	30
• Modify variables, max.	14

Technical specifications	
Forcing	
• Forcing	Yes
• Variables	Inputs, outputs
• Maximum number of tags	10
Status block	Yes (max. 2 blocks simultaneously)
Single step	Yes
• Number of breakpoints	4
Diagnostic buffer	
• Available	Yes
• Maximum number of entries	500
• Configurable	No
• Of which are power-failure-proof	100, only the last 100 entries are retentive
• Maximum number of entries that can be read in RUN	499
• Number of entries that can be set in RUN	Yes (from 10 to 499)
• Number of preset entries in RUN	10
Service data	
• Can be read out	Yes
Monitoring function	
• Status LEDs	Yes
Communication functions	
PG/OP communication	Yes
Prioritized OCM communication	
• Supported	Yes
Routing	Yes
• Number of routing connections	X1 as MPI max. 10 X1 as DP master max. 24 X1 as DP slave (active) max. 14 X2 as DP master max. 24 X2 as DP slave (active) max. 14
• Data record routing	Yes
Global data communication	
• Supported	Yes
• Number of GD circles, max.	8
• Number of GD packets, max.	8
• Number of GD packets, sender, max.	8
• Number of GD packets, receiver, max.	8

Technical specifications	
• Size of GD packets, max.	22 bytes
• Size of GD packets, of those consistent, max.	22 bytes
S7 basic communication	
• Supported	Yes
• User data per job, max.	76 bytes
• User data per job, consistent, max.	76 bytes (for X_SEND/RCV); 76 bytes (for X_PUT/GET as server)
S7 communication	
• Supported	Yes
• As server	Yes
• As client	Yes (via CP and loadable FBs)
• User data per job, max.	180 bytes (for PUT/GET)
• User data per job, consistent, max.	240 bytes (as server)
S5-compatible communication	
• Supported	Yes (via CP and loadable FCs)
Number of connections	
• Total	32
Suitable for PG communication	31
• PG communication, reserved	1
• PG communication, configurable, min.	1
• PG communication, configurable, max.	31
Suitable for OP communication	31
• OP communication, reserved	1
• OP communication, configurable, min.	1
• OP communication, configurable, max.	31
Suitable for S7 basic communication	30
• S7 basic communication, reserved	0
• S7 basic communication, configurable, min.	0
• S7 basic communication, configurable, max.	30
Interfaces	
1st interface	
Interface designation	X1
Type of interface	Integrated RS 485 interface
Hardware	RS 485
• electrically disconnected	Yes

Technical specifications	
• Interface power supply (15 V DC to 30 V DC), max.	200 mA
Functionality	
• MPI	Yes
• DP master	Yes
• DP slave	Yes
• Point-to-point connection	No
MPI	
Services	
• PG/OP communication	Yes
• Routing	Yes
• Global data communication	Yes
• S7 basic communication	Yes
• S7 communication	Yes (server only; connection configured at one end)
• S7 communication, as client	No
• S7 communication, as server	Yes
Transmission rate, max.	12 Mbps
DP master	
Services	
• PG/OP communication	Yes
• Routing	Yes
• Global data communication	No
• S7 basic communication	Yes (intelligent blocks only)
• S7 communication	Yes (server only; connection configured at one end)
• Constant bus cycle time supported	Yes
• Isochronous mode	No
• SYNC/FREEZE	Yes
• Activate/deactivate DP slaves – Max. number of DP slaves that can be enabled / disabled simultaneously	Yes 8
• Direct data exchange (cross-traffic)	Yes (as subscriber)
• DPV1	Yes
Transmission rate, max.	12 Mbps
Number of DP slaves	124
Address range	

Technical specifications	
• Inputs, max.	8192 bytes
• Outputs, max.	8192 bytes
User data per DP slave	
• Inputs, max.	244 bytes
• Outputs, max.	244 bytes
DP slave (DP slave at both DP interfaces is excluded)	
Services	
• PG/OP communication	Yes
• Routing	Yes (only if interface is active)
• Global data communication	No
• S7 basic communication	No
• S7 communication	Yes (server only; connection configured at one end)
• Direct data exchange (cross-traffic)	Yes
• DPV1	No
Transmission rate, max.	12 Mbps
Automatic baud rate detection	Yes (only if interface is passive)
Transfer memory	
• Inputs	244 bytes
• Outputs	244 bytes
• Address range, max.	32
• User data per address range, max.	32 bytes
GSD file	The current GSD file is available for download from the Internet (http://www.siemens.com/profibus-gsd).
2nd interface	
Interface designation	X2
Type of interface	Integrated RS 485 interface
Hardware	RS 485
• electrically disconnected	Yes
• Interface power supply (15 V DC to 30 V DC), max.	200 mA
Functionality	
• MPI	No
• DP master	Yes
• DP slave	Yes
• Point-to-point connection	No

Technical specifications	
DP master	
Services	
• PG/OP communication	Yes
• Routing	Yes
• Global data communication	No
• S7 basic communication	Yes (intelligent blocks only)
• S7 communication	Yes (server only; connection configured at one end)
• S7 communication, as client	No
• S7 communication, as server	Yes
• Constant bus cycle time supported	Yes
• Isochronous mode	Yes (OB61)
• Direct data exchange (cross-traffic)	Yes (as subscriber)
• SYNC/FREEZE	Yes
• Activate/deactivate DP slaves – Max. number of DP slaves that can be enabled / disabled simultaneously	Yes 8
• DPV1	Yes
Transmission rate, max.	12 Mbps
Number of DP slaves, max.	124
Address range	
• Inputs, max.	8192 bytes
• Outputs, max.	8192 bytes
User data per DP slave	
• Inputs, max.	244 bytes
• Outputs, max.	244 bytes
DP slave (DP slave at both DP interfaces is excluded)	
Services	
• PG/OP communication	Yes
• Routing	Yes (only if interface is active)
• Global data communication	No
• S7 basic communication	No
• S7 communication	Yes (server only, connections configured at one end)
• S7 communication, as client	No
• S7 communication, as server	Yes

Technical specifications	
• Direct data exchange (cross-traffic)	Yes
• DPV1	No
Transmission rate, max.	12 Mbps
Automatic baud rate detection	Yes (only if interface is passive)
GSD file	The current GSD file is available for download from the Internet (http://www.siemens.com/profibus-gsd).
Transfer memory	
• Inputs	244 bytes
• Outputs	244 bytes
• Address range, max.	32
• User data per address range, max.	32 bytes
Programming	
Programming language	
• LAD	Yes
• FBD	Yes
• STL	Yes
• SCL	Yes
• CFC	Yes
• GRAPH	Yes
• HiGraph®	Yes
Instruction set	See instruction list
• Nesting levels	8
Know-how protection	
• User program/password security	Yes
• Block encryption	Yes, using S7-Block Privacy
System functions (SFC)	See instruction list
System function blocks (SFB)	See instruction list
Dimensions	
• Mounting dimensions W x H x D (mm)	40 x 125 x 130
• Weight	360 g
Voltages and currents	
• Power supply (rated value)	24 V DC
• Low limit of admissible range (DC)	19.2 V
• High limit of admissible range (DC)	28.8 V
• Current consumption (open-circuit), typically	120 mA

Technical specifications	
• Current consumption (rated value)	870 mA
• Inrush current, typ.	4 A
• I^2t	1 A^2s
• External protection of power supply lines (recommended), min.	2 A
• Power loss, typically	4.5 W

9.7 CPU 317-2 PN/DP

Technical specifications

Table 9- 8 Technical specifications of the CPU 317-2 PN/DP

Technical specifications	
CPU and version	
• MLFB	6ES7317-2EK14-0AB0
• Hardware version	01
• Firmware version	V3.2.1
• Associated programming package	STEP 7 as of V5.5 + HSP 199
Memory	
Main memory	
• Integrated	1 MB
• Expandable	No
• Maximum size of non-volatile memory for retentive data blocks	256 KB
Load memory	
• Pluggable (MMC)	Yes
• Pluggable (MMC), max.	8 MB
• Data retention on the Micro Memory Card (after the last programming action), min.	10 years
Backup	
• Available	Yes (ensured with Micro Memory Card - maintenance-free)
• Without battery	Yes (program and data)

Technical specifications	
Execution times	
• For bit operation, min.	0.025 µs
• For word operations, min.	0.03 µs
• For fixed-point arithmetic, min.	0.04 µs
• For floating-point arithmetic, min.	0.16 µs
Timers/counters and their retentivity	
S7 counters	
• Number	512
Retentivity	
• Configurable	Yes
• Default	Z 0 to Z 7
Counting range	
• Low limit	0
• High limit	999
IEC counter	
• Available	Yes
• Type	SFB
• Number	Unlimited (limited only by main memory size)
S7 timers	
• Number	512
Retentivity	
• Configurable	Yes
• Default	No retentivity
Time setting range	
• Low limit	10 ms
• High limit	9990 s
IEC timer	
• Available	Yes
• Type	SFB
• Number	Unlimited (limited only by main memory size)
Data areas and their retentivity	
Bit memory	
• Number, max.	4096 bytes
• Retentivity, available	Yes (from MB 0 to MB 4095)
• Retentivity, default	MB 0 to MB 15

Technical specifications	
• Number of clock memories	8 (1 memory byte)
Data blocks	
• Number, max.	2048 (in the number range 1 to 16000)
• Size, max.	64 KB
• Retentivity, configurable	Yes, via non-retain feature on the DB
• Retentivity, default	Yes
Local data	
• Per priority class, max.	32 KB per execution level, 2 KB per block
Blocks	
• Number of blocks (total)	2048 (DBs, FCs, FBs) The maximum number of blocks that can be loaded may be reduced due to the Micro Memory Card you are using.
OB	See instruction list
• Size, max.	64 KB
• Number of free cycle OBs	1 (OB 1)
• Number of time-of-day interrupt OBs	1 (OB 10)
• Number of time-delay interrupt OBs	2 (OB 20, 21)
• Number of cyclic interrupt OBs	4 (OB 32, 33, 34, 35)
• Number of hardware interrupt OBs	1 (OB 40)
• Number of DPV1 interrupt OBs	3 (OB 55, 56, 57)
• Number of isochronous interrupt OBs	1 (OB 61)
• Number of restart OBs	1 (OB100)
• Number of asynchronous error OBs	6 (OB 80, 82, 83, 85, 86, 87) (OB83 for PROFINET IO)
• Number of synchronous error OBs	2 (OB 121, 122)
Nesting depth	
• Per priority class	16
• Additionally within an error OB	4
FB	See instruction list
• Number, max.	2048 (in the number range 0 to 7999)
• Size	64 KB
FC	See instruction list
• Number, max.	2048 (in the number range 0 to 7999)

Technical specifications	
• Size	64 KB
Address ranges (inputs/outputs)	
I/O address area	
• Inputs	8192 bytes
• Outputs	8192 bytes
Distributed	
• Inputs	8192 bytes
• Outputs	8192 bytes
I/O process image	
• Inputs	8192 bytes
• Outputs	8192 bytes
• Inputs, adjustable	8192 bytes
• Outputs, adjustable	8192 bytes
• Inputs, preset	256 bytes
• Outputs, preset	256 bytes
Process image partitions	
• Number of partial process images, max.	1
• Amount of user data in the process image partition for isochronous PROFINET IO, max.	1600 bytes
Digital channels	
• Inputs	65536
• Outputs	65536
• Inputs, of those central	1024
• Outputs, of those central	1024
Analog channels	
• Inputs	4096
• Outputs	4096
• Inputs, of those central	256
• Outputs, of those central	256
Hardware configuration	
• Racks, max.	4
• Modules per rack, max.	8
Number of DP masters	
• Integrated	1
• Via CP	4

Technical specifications	
Number of usable FMs and CPs (recommended)	
• FM	8
• CP, point-to-point	8
• CP, LAN	10
Time-of-day	
Clock	
• Hardware clock (real-time)	Yes
• Buffered, can be synchronized	Yes
• Factory setting	DT#1994-01-01-00:00:00
• Buffered period	Typically 6 weeks (at an ambient temperature of 40 °C)
• Behavior of the clock on expiration of the buffered period	The clock continues at the time of day it had when power was switched off.
• Behavior of the real-time clock after POWER ON	The clock continues running after POWER OFF.
• Deviation per day, max.	10 s, typ. 2 s
Runtime meter	
• Number	4
• Number/number range	0 to 3
• Range of values	0 to 2^{31} hours (using the SFC 101)
• Granularity	1 hour
• Retentive	Yes; must be manually restarted after every restart
Clock synchronization	
• Supported	Yes
• On MPI, master	Yes
• On MPI, slave	Yes
• On DP, master	Yes (DP slave must be time slave)
• On DP, slave	Yes
• On the AS, master	Yes
• On the AS, slave	Yes
• On Ethernet via NTP	Yes (as client)
S7 signaling functions	
• Number of stations that can be logged on for signaling functions, max.	32 (depends on the number of connections configured for PG/OP and S7 basic communication)

Technical specifications	
• Process error diagnostic messages	Yes
• Simultaneously enabled interrupt S blocks, max.	300
Test and startup functions	
Status/modify	
• Status/modify variable	Yes
• Variables	Inputs, outputs, bit memories, DBs, timers, counters
• Maximum number of variables	30
• Status variables, max.	30
• Modify variables, max.	14
Forcing	
• Forcing	Yes
• Variables	Inputs, outputs
• Maximum number of tags	10
Status block	Yes (max. 2 blocks simultaneously)
Single step	Yes
• Number of breakpoints	4
Diagnostic buffer	
• Available	Yes
• No. of entries, max.	500
• Configurable	No
• Of which are power-failure-proof	100, only the last 100 entries are retentive
• Maximum number of entries that can be read in RUN	499
• Number of entries that can be set in RUN	Yes (from 10 to 499)
• Number of preset entries in RUN	10
Service data	
• Can be read out	Yes
Monitoring function	
• Status LEDs	Yes
Communication functions	
PG/OP communication	Yes
Prioritized OCM communication	
• Supported	Yes
Routing	Yes

Technical specifications	
• Number of routing connections	X1 as MPI max. 10; X1 as DP master max. 24 X1 as DP slave (active) max. 24 X2 as PROFINET max. 24
• Data record routing	Yes
Global data communication	
• Supported	Yes
• Number of GD circles, max.	8
• Number of GD packets, max.	8
• Number of GD packets, sender, max.	8
• Number of GD packets, receiver, max.	8
• Size of GD packets, max.	22 bytes
• Size of GD packets, of those consistent, max.	22 bytes
S7 basic communication	
• Supported	Yes
• User data per job, max.	76 bytes
• User data per job, consistent, max.	76 bytes (for X-SEND/REC); 64 bytes (for X-PUT/GET as server)
S7 communication	
• Supported	Yes
• As server	Yes
• As client	Yes (via integrated PN interface and loadable FBs, or via CP and loadable FBs)
• User data per job	See the STEP 7 Online Help, *Common parameters of SFBs/FBs and SFC/FC of the S7 communication)*
S5-compatible communication	
• Supported	Yes (via CP and loadable FCs)
Web server	
• Supported	Yes
• Number of HTTP clients	5
• User-defined web pages	Yes
Open IE communication	
• Supported	Yes
• Maximum number of connections/access points	16
• Local port number used at the system end	0, 20, 21, 23, 25, 80, 102, 135, 161, 8080, 34962, 34963, 34964, 65532, 65533, 65534, 65535

Technical specifications	
TCP/IP	Yes (via integrated PROFINET interface and loadable FBs)
• Maximum number of connections	16
• Data length for connection type 01_H, max.	1460 bytes
• Data length for connection type 11_H, max.	32768 bytes
• Multiple passive connections per port (multiport), Supported	Yes
ISO on TCP	Yes (via integrated PROFINET interface and loadable FBs)
• Maximum number of connections	16
• Data length, max.	32768 bytes
UDP	Yes (via integrated PROFINET interface and loadable FBs)
• Maximum number of connections	16
• Data length, max.	1472 bytes
iPAR server	
• Supported	Yes
Number of connections	
• Total	32
Suitable for PG communication	31
• PG communication, reserved	1
• PG communication, configurable, min.	1
• PG communication, configurable, max.	31
Suitable for OP communication	31
• OP communication, reserved	1
• OP communication, configurable, min.	1
• OP communication, configurable, max.	31
Suitable for S7 basic communication	30
• S7 basic communication, reserved	0
• S7 basic communication, configurable, min.	0
• S7 basic communication, configurable, max.	30
Suitable for S7 communication	16
• S7 communication, reserved	0
• S7 communication, configurable, min.	0
• S7 communication, configurable, max.	16
Total number of instances, max.	32

Technical specifications	
PROFINET CBA (with communication load setpoint)	
• Reference setting for CPU communication	50 %
• Number of remote interconnecting partners	32
• Number of master/slave functions	30
• Total of all master/slave connections	1000
• Data length of all incoming master/slave connections, max.	4000 bytes
• Data length of all outgoing master/slave connections, max.	4000 bytes
• Number of device-internal and PROFIBUS interconnections	500
• Data length of the device-internal and PROFIBUS interconnections, max.	4000 bytes
• Data length per connection, max.	1400 bytes
Remote interconnections with acyclic transmission	
• Sampling rate: Sampling time, min.	500 ms
• Number of incoming interconnections	100
• Number of outgoing interconnections	100
• Data length of all incoming interconnections, max.	2000 bytes
• Data length of all outgoing interconnections, max.	2000 bytes
• Data length per connection (acyclic interconnections), max.	1400 bytes
Remote interconnections with cyclic transmission	
• Transmission frequency: Minimum transmission interval	10 ms
• Number of incoming interconnections	200
• Number of outgoing interconnections	200
• Data length of all incoming interconnections, max.	2000 bytes
• Data length of all outgoing interconnections, max.	2000 bytes
• Data length per connection (acyclic interconnections), max.	450 bytes
HMI variables via PROFINET (acyclic)	
• HMI variables update	500 ms

Technical specifications	
• Number of stations that can be logged on for HMI variables (PN OPC/iMAP)	3 (2 x PN OPC/1 x iMAP)
• Number of HMI variables	200
• Data length of all HMI variables, max.	2000 bytes
PROFIBUS proxy functionality	
• Supported	Yes
• Number of coupled PROFIBUS devices	16
• Data length per connection, max.	240 bytes (slave dependent)
Interfaces	
1st interface	
Interface designation	X1
Type of interface	Integrated RS 485 interface
Hardware	RS 485
• electrically disconnected	Yes
• Interface power supply (15 V DC to 30 V DC), max.	200 mA
Functionality	
• MPI	Yes
• DP master	Yes
• DP slave	Yes
• Point-to-point connection	No
• PROFINET	No
MPI	
Services	
• PG/OP communication	Yes
• Routing	Yes
• Global data communication	Yes
• S7 basic communication	Yes
• S7 communication	Yes (server only, connections configured at one end)
• S7 communication, as client	No (but via CP and loadable FBs)
• S7 communication, as server	Yes
Transmission rate, max.	12 Mbps
DP master	
Services	
• PG/OP communication	Yes
• Routing	Yes

Technical specifications	
• Global data communication	No
• S7 basic communication	Yes (intelligent blocks only)
• S7 communication	Yes (server only; connection configured at one end)
• Constant bus cycle time supported	Yes
• Isochronous mode	Yes (OB 61 - operation in isochronous mode is possible either on DP, or on PROFINET IO (not concurrently))
• SYNC/FREEZE	Yes
• Activate/deactivate DP slaves	Yes
• Max. number of DP slaves that can be enabled / disabled simultaneously	8
• Direct data exchange (cross-traffic)	Yes (as subscriber)
• DPV1	Yes
Transmission rate, max.	12 Mbps
Number of DP slaves, max.	124
Address range	
• Inputs, max.	8 KB
• Outputs, max.	8 KB
User data per DP slave	
• Inputs, max.	244 bytes
• Outputs, max.	244 bytes
DP slave	
Services	
• PG/OP communication	Yes
• Routing	Yes (only if interface is active)
• Global data communication	No
• S7 basic communication	No
• S7 communication	Yes (server only; connection configured at one end)
• Direct data exchange (cross-traffic)	Yes
• DPV1	No
Transmission rate, max.	12 Mbps
Automatic baud rate detection	Yes (only if interface is passive)
Transfer memory	
• Inputs	244 bytes
• Outputs	244 bytes

Technical specifications	
• Address areas, max.	32
• User data per address range, max.	32 bytes
GSD file	The current GSD file is available for download from the Internet (http://www.siemens.com/profibus-gsd).
2nd interface	
Interface designation	X2
Type of interface	PROFINET
Hardware	Ethernet RJ 45
• electrically disconnected	Yes
• Integrated switch	Yes
• Number of ports	2
• Automatic determination of the transmission rate	Yes (10/100 Mbps)
• Autonegotiation	Yes
• Autocrossing	Yes
Media redundancy	
• Supported	Yes
• Changeover time on line break, typically	200 ms (PROFINET MRP)
• Number of nodes on the ring, max.	50
Change of the IP address at runtime, supported	Yes
Keep-alive function, supported	Yes
Functionality	
• MPI	No
• DP master	No
• DP slave	No
• PROFINET IO controller	Yes, even simultaneously with IO device functionality
• PROFINET IO device	Yes, even simultaneously with IO controller functionality
• PROFINET CBA	Yes (acyclic and cyclic transmission)
• Open IE communication	Yes; via TCP/IP, ISO on TCP, UDP
• Web server – Number of HTTP clients	Yes 5
PROFINET IO controller	
Services	
• PG/OP communication	Yes
• Routing	Yes

Technical specifications	
• S7 communication	Yes (with loadable FBs, max. configurable connections: 16; maximum number of instances: 32)
• Open IE communication	Yes; via TCP/IP, ISO on TCP, UDP
Number of integrated PROFINET IO controllers	1
RT, supported	Yes
IRT, supported	Yes
Transmission rate, max.	100 Mbps
Maximum number of connectable IO devices	128
Number of connectable IO devices, for RT, max.	128
• of which in line, max.	128
Number of IO devices with IRT and "high flexibility" option	128
• of which in line, max.	61
Number of IO devices with IRT and "high performance" option, max.	64
• of which in line, max.	64
Shared Device, supported	Yes
Isochronous mode	Yes (OB 61, isochronous mode can be used only alternatively on PROFIBUS DP or PROFINET IO)
Prioritized startup, supported	Yes
• Maximum number of IO devices with prioritized startup	32
Activating/deactivating PROFINET IO devices	Yes
• Number of IO devices that can be enabled / disabled simultaneously, max.	8
IO devices changing during runtime (partner ports), supported	Yes
• Number of IO devices per tool, max.	8
Device replacement without removable medium	Yes
Send clocks	250 µs, 500 µs,1 ms
	2 ms, 4 ms (not for IRT with "high flexibility" option)
Update time	
• Update times	The minimum update time also depends on the time slice set for PROFINET IO communication, the number of IO Devices used, and on the amount of configured user data.
With RT	
• for send clock of 250 µs	250 µs to 128 ms
• for send clock of 500 µs	500 µs to 256 ms
• for send clock of 1 ms	1 ms to 512 ms

Technical specifications	
• for send clock of 2 ms	2 ms to 512 ms
• for send clock of 4 ms	4 ms to 512 ms
For IRT with "high flexibility" option	
• For send clock of 250 µs	250 µs to 128 ms
• For send clock of 500 µs	500 µs to 256 ms
• For send clock of 1 ms	1 ms to 512 ms
For IRT with "high performance" option	
• for send clock of 250 µs	250 µs to 4 ms
• for send clock of 500 µs	500 µs to 8 ms
• for send clock of 1 ms	1 ms to 16 ms
• for send clock of 2 ms	2 ms to 32 ms
• for send clock of 4 ms	4 ms to 64 ms
For IRT with "high performance" option and parameter assignment for "odd-numbered" send clocks	Update time = "odd-numbered" send clock set (any multiple of 125 µs: 375 µs, 625 µs to 3.875 ms
Address range	
• Inputs, max.	8 KB
• Outputs, max.	8 KB
User data per address range, max.	
• User data consistency, max.	1024 bytes
PROFINET intelligent IO device	
Services	
• PG/OP communication	Yes
• S7 routing	Yes
• S7 communication	Yes (with loadable FBs, max. configurable connections: 16, maximum number of instances: 32
• Open IE communication	Yes; via TCP/IP, ISO on TCP, UDP
RT, supported	Yes
IRT, supported	Yes
PROFIenergy, supported	*Prepared with SFB 73 / 74 for loadable PROFIenergy standard FBs for intelligent IO devices*
Shared Device, supported	Yes
• Number of IO controllers for shared devices, max.	2
Isochronous mode	No
Application transfer areas	Yes
IO devices transfer area	No

Technical specifications	
Transfer memory	
• Inputs, max.	1440 bytes; per controller for shared devices
• Outputs, max.	1440 bytes; per controller for shared devices
Submodules	
• Number, max.	64
• User data per submodule, max.	1024 bytes
Programming	
Programming language	
• LAD	Yes
• FBD	Yes
• STL	Yes
• SCL	Yes
• CFC	Yes
• GRAPH	Yes
• HiGraph®	Yes
Instruction set	See instruction list
• Nesting levels	8
Know-how protection	
• User program/password security	Yes
• Block encryption	Yes, using S7-Block Privacy
System functions (SFC)	See instruction list
System function blocks (SFB)	See instruction list
Dimensions	
• Mounting dimensions W x H x D (mm)	40 x 125 x 130
• Weight	340 g
Voltages and currents	
• Power supply (rated value)	24 V DC
• Low limit of admissible range (DC)	19.2 V
• High limit of admissible range (DC)	28.8 V
• Current consumption (open-circuit), typically	150 mA
• Current consumption (rated value)	750 mA
• Inrush current, typ.	4 A
• I^2t	1 A^2s
• External protection of power supply lines (recommended), min.	2 A
• Power loss, typically	4.65 W

9.8 CPU 319-3 PN/DP

Technical specifications

Table 9- 9 Technical specifications of the CPU 319-3 PN/DP

Technical specifications	
CPU and version	
• MLFB	6ES7318-3EL01-0AB0
• Hardware version	01
• Firmware version	V3.2.1
• Associated programming package	STEP 7 V5.5 or higher
Memory	
Main memory	
• Integrated	2048 KB
• Expandable	No
• Maximum size of non-volatile memory for retentive data blocks,	700 KB
Load memory	
• Pluggable (MMC)	Yes
• Pluggable (MMC), max.	8 MB
• Data retention on the Micro Memory Card (after the last programming action), min.	10 years
Backup	
• Available	Yes (ensured with Micro Memory Card - maintenance-free)
• Without battery	Yes (program and data)
Execution times	
• For bit operations, min.	0.004 µs
• For word operations, min.	0.01 µs
• for fixed-point arithmetic, min.	0.01 µs
• for floating-point arithmetic, min.	0.04 µs
Timers/counters and their retentivity	
S7 counters	
• Number	2048
Retentivity	
• Configurable	Yes
• Default	Z 0 to Z 7

Technical specifications	
Counting range	
• Low limit	0
• High limit	999
IEC counter	
• Available	Yes
• Type	SFB
• Number	Unlimited (limited only by main memory size)
S7 timers	
• Number	2048
Retentivity	
• Configurable	Yes
• Default	No retentivity
Time setting range	
• Low limit	10 ms
• High limit	9990 s
IEC timer	
• Available	Yes
• Type	SFB
• Number	Unlimited (limited only by main memory size)
Data areas and their retentivity	
Bit memory	
• Number, max.	8192 bytes
• Retentivity, available	Yes (MB 0 to MB 8191)
• Retentivity, default	MB 0 to MB 15
• Number of clock memories	8 (1 memory byte)
Data blocks	
• Number, max.	4096 (in the number range 1 to 16000)
• Size, max.	64 KB
• Retentivity, configurable	Yes, via non-retain feature on the DB
• Retentivity, default	Yes
Local data	
• Per priority class, max.	32 KB per execution level, 2 KB per block

Technical specifications	
Blocks	
• Number of blocks (total)	4096 (DBs, FCs, FBs) The maximum number of blocks that can be loaded may be reduced due to the Micro Memory Card you are using.
OB	See instruction list
• Size, max.	64 KB
• Number of free cycle OBs	1 (OB 1)
• Number of time-of-day interrupt OBs	1 (OB 10)
• Number of time-delay interrupt OBs	2 (OB 20, 21)
• Number of cyclic interrupt OBs	4 (OB 32, 33, 34, 35) (OB 35 as of 500 µs)
• Number of hardware interrupt OBs	1 (OB 40)
• Number of DPV1 interrupt OBs (only DP CPUs)	3 (OB 55, 56, 57)
• Number of isochronous interrupt OBs	1 (OB 61)
• Number of asynchronous error OBs	6 (OB 80, 82, 83, 85, 86, 87) (OB 83 only for PROFINET IO)
• Number of restart OBs	1 (OB 100)
• Number of synchronous error OBs	2 (OB 121, 122)
Nesting depth	
• Per priority class	16
• Additionally within an error OB	4
FB	See instruction list
• Number, max.	4096 (number range from 0 to 7999)
• Size, max.	64 KB
FC	See instruction list
• Number, max.	4096 (number range from 0 to 7999)
• Size, max.	64 KB
Address ranges (inputs/outputs)	
I/O address area	
• Inputs	8192 bytes
• Outputs	8192 bytes
Distributed	
• Inputs	8192 bytes
• Outputs	8192 bytes
I/O process image	

Technical specifications	
• Inputs	8192 bytes
• Outputs	8192 bytes
• Inputs, adjustable	8192 bytes
• Outputs, adjustable	8192 bytes
• Inputs, preset	256 bytes
• Outputs, preset	256 bytes
Process image partitions	
• Number of partial process images, max.	1
• Amount of user data in the process image partition for isochronous PROFINET IO, max.	1600 bytes
Digital channels	
• Inputs	65536
• Outputs	65536
• Inputs, of those central	1024
• Outputs, of those central	1024
Analog channels	
• Inputs	4096
• Outputs	4096
• Inputs, of those central	256
• Outputs, of those central	256
Hardware configuration	
• Racks, max.	4
• Modules per rack, max.	8
Number of DP masters	
• Integrated	2
• Via CP	4
Number of usable FMs and CPs (recommended)	
• FM	8
• CP, point-to-point	8
• CP, LAN	10
Time-of-day	
Clock	
• Hardware clock (real-time)	Yes
• Buffered, can be synchronized	Yes
• Factory setting	DT#1994-01-01-00:00:00

Technical specifications	
• Buffered period	Typically 6 weeks (at an ambient temperature of 40 °C)
• Behavior of the clock on expiration of the buffered period	The clock continues at the time of day it had when power was switched off.
• Behavior of the real-time clock after POWER ON	The clock continues running after POWER OFF.
• Deviation per day, max.	10 s, typ. 2 s
Runtime meter	
• Number	4
• Number/number range	0 to 3
• Range of values	0 to 2^{31} hours (using the SFC 101)
• Granularity	1 hour
• Retentive	Yes; must be manually restarted after every restart
Clock synchronization	
• supported	Yes
• On MPI, master	Yes
• On MPI, slave	Yes
• On DP, master	Yes (DP slave must be time slave)
• On DP, slave	Yes
• On the AS, master	Yes
• On the AS, slave	Yes
• On Ethernet via NTP	Yes (as client)
S7 signaling functions	
• Number of stations that can be logged on for signaling functions, max.	32 (depends on the number of connections configured for PG/OP and S7 basic communication)
• Process error diagnostic messages	Yes
• Simultaneously enabled interrupt S blocks, max.	300
Test and startup functions	
Status/modify	
• Status/modify variable	Yes
• Variables	Inputs, outputs, bit memories, DBs, timers, counters
• Maximum number of variables	30
• Status variables, max.	30

Technical specifications	
• Modify variables, max.	14
Forcing	
• Forcing	Yes
• Variables	Inputs, outputs
• Maximum number of tags	10
Status block	Yes (max. 2 blocks simultaneously)
Single step	Yes
• Number of breakpoints	4
Diagnostic buffer	
• Available	Yes
• No. of entries, max.	500
• Configurable	No
• of which are power-failure-proof	100, only the last 100 entries are retentive
• Maximum number of entries that can be read in RUN	499
• Number of entries that can be set in RUN	Yes (from 10 to 499)
• Number of preset entries in RUN	10
Service data	
• Can be read out	Yes
Monitoring functions	
• Status LEDs	Yes
Communication functions	
PG/OP communication	Yes
Prioritized OCM communication	
• supported	Yes
Routing	Yes
• Number of routing connections	X1 as MPI: max. 10 X1 as DP master: max. 24 X1 as DP slave (active): max. 14 X2 as DP master: max. 24 X2 as DP slave (active): max. 14 X3 as PROFINET: Max. 48
• Data record routing	Yes
Global data communication	
• supported	Yes
• Number of GD circles, max.	8
• Number of GD packets, max.	8
• Number of GD packages, sender, max.	8

Technical specifications	
• Number of GD packets, receiver, max.	8
• Size of GD packets, max.	22 bytes
• Size of GD packets, of those consistent, max.	22 bytes
S7 basic communication	
• supported	Yes
• User data per job, max.	76 bytes
• User data per job, consistent, max.	76 bytes (for X_SEND or X_RCV) 64 bytes (for X_PUT or X_GET as server)
S7 communication	
• supported	Yes
• As server	Yes
• As client	Yes (via integrated PN interface and loadable FBs, or via CP and loadable FBs)
• User data per job, max.	See the STEP 7 Online Help, *Common parameters of SFBs/FBs and SFC/FC of the S7 communication)*
S5-compatible communication	
• supported	Yes (via CP and loadable FCs)
Web server	
• supported	Yes
• Number of HTTP clients	5
• User-defined web pages	Yes
Open IE communication	
• supported	Yes
• Maximum number of connections/access points	32
• Local port number used at the system end	0, 20, 21, 23, 25, 80, 102, 135, 161, 8080, 34962, 34963, 34964, 65532, 65533, 65534, 65535
TCP/IP	Yes (via integrated PROFINET interface and loadable FBs)
• Maximum number of connections	32
• Data length for connection type 01_H, max.	1460 bytes
• Data length for connection type 11_H, max.	32768 bytes
• Multiple passive connections per port (multiport), supported	Yes
ISO on TCP	Yes (via integrated PROFINET interface and loadable FBs)
• Maximum number of connections	32
• Data length, max.	32768 bytes

Technical specifications	
UDP	Yes (via integrated PROFINET interface and loadable FBs)
• Maximum number of connections	32
• Data length, max.	1472 bytes
iPAR server	
• supported	Yes
Number of connections	
• Total	32
Suitable for PG communication	31
• PG communication, reserved	1
• PG communication, configurable, min.	1
• PG communication, configurable, max.	31
Suitable for OP communication	31
• OP communication, reserved	1
• OP communication, configurable, min.	1
• OP communication, configurable, max.	31
Suitable for S7 basic communication	30
• S7 basic communication, reserved	0
• S7 basic communication, configurable, min.	0
• S7 basic communication, configurable, max.	30
Suitable for S7 communication	16
• S7 communication, reserved	0
• S7 communication, configurable, min.	0
• S7 communication, configurable, max.	16
Total number of instances, max.	32
PROFINET CBA (with communication load setpoint)	
• Reference setting for the CPU communication load	20 %
• Number of remote interconnecting partners	32
• Number of master/slave functions	50
• Total of all master/slave connections	3000
• Data length of all incoming master/slave connections, max.	24000 bytes
• Data length of all outgoing master/slave connections, max.	24000 bytes

Technical specifications	
• Number of device-internal and PROFIBUS interconnections	1000
• Data length of the device-internal and PROFIBUS interconnections, max.	8000 bytes
• Data length per connection, max.	1400 bytes
Remote interconnections with acyclic transmission	
• Sampling rate: Sampling interval, min.	200 ms
• Number of incoming interconnections	100
• Number of outgoing interconnections	100
• Data length of all incoming interconnections, max.	3200 bytes
• Data length of all outgoing interconnections, max.	3200 bytes
• Data length per connection (acyclic interconnections), max.	1400 bytes
Remote interconnections with cyclic transmission	
• Transmission frequency: Minimum transmission interval	1 ms
• Number of incoming interconnections	300
• Number of outgoing interconnections	300
• Data length of all incoming interconnections, max.	4800 bytes
• Data length of all outgoing interconnections, max.	4800 bytes
• Data length per connection (acyclic interconnections), max.	450 bytes
HMI variables via PROFINET (acyclic)	
• HMI variables update	500 ms
• Number of stations that can be logged on for HMI variables (PN OPC/iMap)	3, (2 x PN OPC/1 x iMap)
• Number of HMI variables	600
• Data length of all HMI variables, max.	9600 bytes
PROFIBUS proxy functionality	
• supported	Yes
• Number of coupled PROFIBUS devices	32
• Data length per connection, max.	240 bytes (slave dependent)

Technical specifications	
Interfaces	
1st interface	
Interface designation	X1
Type of interface	Integrated RS 485 interface
Hardware	RS 485
• electrically disconnected	Yes
• Interface power supply (15 VDC to 30 VDC), max.	150 mA
Functionality	
• MPI	Yes
• DP master	Yes
• DP slave	Yes
• Point-to-point connection	No
• PROFINET	No
MPI	
Services	
• PG/OP communication	Yes
• Routing	Yes
• Global data communication	Yes
• S7 basic communication	Yes
• S7 communication	Yes (server only, connections configured at one end)
• S7 communication, as client	No (but via CP and loadable FBs)
• S7 communication, as server	Yes
Transmission rate, max.	12 Mbps
DP master	
Services	
• PG/OP communication	Yes
• Routing	Yes
• Global data communication	No
• S7 basic communication	Yes (only I blocks)
• S7 communication	Yes (server only; connection configured at one end)
• Constant bus cycle time supported	Yes
• Isochronous mode	No
• SYNC/FREEZE	Yes

Technical specifications	
• Activate/deactivate DP slaves – Max. number of DP slaves that can be enabled / disabled simultaneously	Yes 8
• Direct data exchange (cross-traffic)	Yes (as subscriber)
• DPV1	Yes
Transmission rate, max.	12 Mbps
Number of DP slaves, max.	124
Address range	
• Inputs, max.	8 KB
• Outputs, max.	8 KB
User data per DP slave	
• Inputs, max.	244 bytes
• Outputs, max.	244 bytes
DP slave (DP slave at both DP interfaces is excluded	
Services	
• PG/OP communication	Yes
• Routing	Yes (only if interface is active)
• Global data communication	No
• S7 basic communication	No
• S7 communication	Yes (server only; connection configured at one end)
• Direct data exchange (cross-traffic)	Yes
• DPV1	No
Transmission rate, max.	12 Mbps
Automatic baud rate detection	Yes (only if interface is passive)
Transfer memory	
• Inputs	244 bytes
• Outputs	244 bytes
• Address range, max.	32
• User data per address range, max.	32 bytes
GSD file	The current GSD file is available for download from the Internet (http://www.siemens.com/profibus-gsd).
2nd interface	
Interface designation	X2
Type of interface	Integrated RS 485 interface
Hardware	RS 485
• electrically disconnected	Yes

Technical specifications	
• Interface power supply (15 VDC to 30 VDC), max.	200 mA
Functionality	
• MPI	No
• DP master	Yes
• DP slave	Yes
• PROFINET IO controller	No
• PROFINET IO device	No
• PROFINET CBA	No
• Open IE communication	No
• Web server	No
DP master	
Services	
• PG/OP communication	Yes
• Routing	Yes
• Global data communication	No
• S7 basic communication	Yes (intelligent blocks only)
• S7 communication	Yes (server only; connection configured at one end)
• S7 communication, as client	No
• S7 communication, as server	Yes
• Constant bus cycle time supported	Yes
• Isochronous mode	Yes (OB 61 - operation in isochronous mode is possible either on DP, or on PROFINET IO (not concurrently))
• SYNC/FREEZE	Yes
• Activate/deactivate DP slaves – Max. number of DP slaves that can be enabled / disabled simultaneously	Yes 8
• Direct data exchange (cross-traffic)	Yes (as subscriber)
• DPV1	Yes
Transmission rate, max.	12 Mbps
Number of DP slaves	124
Address range	
• Inputs, max.	8 KB
• Outputs, max.	8 KB
User data per DP slave	

Technical specifications	
• Inputs, max.	244 bytes
• Outputs, max.	244 bytes
DP slave (DP slave at both DP interfaces is excluded	
Services	
• PG/OP communication	Yes
• Routing	Yes (only if interface is active)
• Global data communication	No
• S7 basic communication	No
• S7 communication	Yes (server only; connection configured at one end)
• S7 communication, as client	No
• S7 communication, as server	Yes
• Direct data exchange (cross-traffic)	Yes
• DPV1	No
Transmission rate, max.	12 Mbps
Automatic baud rate detection	Yes (only if interface is passive)
GSD file	The current GSD file is available for download from the Internet (http://www.siemens.com/profibus-gsd).
Transfer memory	
• Inputs	244 bytes
• Outputs	244 bytes
• Address areas, max.	32
• User data per address range, max.	32 bytes
3rd interface	
Interface designation	X3
Type of interface	PROFINET
Hardware	RJ45 Ethernet
• electrically disconnected	Yes
• Integrated switch	Yes
• Number of ports	2
• Automatic determination of the transmission rate	Yes (10/100 Mbps)
• Autonegotiation	Yes
• Autocrossing	Yes
Media redundancy	
• supported	Yes

Technical specifications	
• Changeover time on line break, typically	200 ms (PROFINET MRP)
• Number of nodes on the ring, max.	50
Change of the IP address at runtime, supported	Yes
Keep-alive function, supported	Yes
Functionality	
• MPI	No
• DP master	No
• DP slave	No
• PROFINET IO controller	Yes, even simultaneously with IO device functionality
• PROFINET IO device	Yes, even simultaneously with IO controller functionality
• PROFINET CBA	Yes (acyclic and cyclic transmission)
• Open IE communication	Yes; via TCP/IP, ISO on TCP, UDP
• Web server – Number of HTTP clients	Yes 5
PROFINET IO controller	
Services	
• PG/OP communication	Yes
• Routing	Yes
• S7 communication	Yes (with loadable FBs, max. configurable connections: 16; maximum number of instances: 32)
• Open IE communication	Yes; via TCP/IP, ISO on TCP, UDP
Number of integrated IO controllers	1
RT, supported	Yes
IRT, supported	Yes
Transmission rate, max.	100 Mbps
Maximum number of connectable IO devices	256
Number of connectable IO devices, for RT, max.	256
• of which in line, max.	256
Number of IO devices with IRT and "high flexibility" option	256
• of which in line, max.	61
Number of IO devices with IRT and "high performance" option, max.	64
• of which in line, max.	64
Shared Device, supported	Yes

Technical specifications	
Isochronous mode	Yes (OB 61 - operation in isochronous mode is possible either on DP, or on PROFINET IO (not concurrently))
Prioritized startup, supported	Yes
• Maximum number of IO devices with prioritized startup	32
Activating/deactivating of PROFINET IO Devices	Yes
• Number of IO devices that can be enabled / disabled simultaneously, max.	8
IO devices changing during runtime (partner ports), supported	Yes
• Number of IO devices per tool, max.	8
Device replacement without removable medium	Yes
Send clocks	250 µs, 500 µs,1 ms
	2 ms, 4 ms (not for IRT with "high flexibility" option)
Update time	
• Update times	The minimum update time also depends on the time slice set for PROFINET IO communication, the number of IO Devices used, and on the amount of configured user data.
With RT	
• for send clock of 250 µs	250 µs to 128 ms
• for send clock of 500 µs	500 µs to 256 ms
• for send clock of 1 ms	1 ms to 512 ms
• for send clock of 2 ms	2 ms to 512 ms
• for send clock of 4 ms	4 ms to 512 ms
For IRT with "high flexibility" option	
• for send clock of 250 µs	250 µs to 128 ms
• for send clock of 500 µs	500 µs to 256 ms
• for send clock of 1 ms	1 ms to 512 ms
For IRT with "high performance" option	
• for send clock of 250 µs	250 µs to 4 ms
• for send clock of 500 µs	500 µs to 8 ms
• for send clock of 1 ms	1 ms to 16 ms
• for send clock of 2 ms	2 ms to 32 ms
• for send clock of 4 ms	4 ms to 64 ms
For IRT with "high performance" option and parameter assignment for "odd-numbered" send clocks	Update time = "odd-numbered" send clock set (any multiple of 125 µs: 375 µs, 625 µs to 3.875 ms

Technical specifications	
Address range	
• Inputs, max.	8192 bytes
• Outputs, max.	8192 bytes
User data per address range, max.	
• User data consistency, max.	1024 bytes
PROFINET IO device	
Services	
• PG/OP communication	Yes
• Routing	Yes
• S7 communication	Yes (with loadable FBs, max. configurable connections: 16, maximum number of instances: 32
• Open IE communication	Yes; via TCP/IP, ISO on TCP, UDP
RT, supported	Yes
IRT, supported	Yes
PROFIenergy, supported	*Prepared with SFB 73 / 74 for loadable PROFIenergy standard FBs for intelligent IO devices*
Shared Device, supported	Yes
• Number of IO controllers for shared devices, max.	2
Isochronous mode	No
Application transfer areas	Yes
IO devices transfer area	No
Transfer memory	
• Inputs, max.	1440 bytes; per controller for shared devices
• Outputs, max.	1440 bytes; per controller for shared devices
Submodules	
• Number, max.	64
• User data per submodule, max.	1024 bytes
Programming	
Programming language	
• LAD	Yes
• FBD	Yes
• STL	Yes
• SCL	Yes
• CFC	Yes
• GRAPH	Yes

Technical specifications	
• HiGraph®	Yes
Instruction set	See instruction list
• Nesting levels	8
Know-how protection	
• User program protection / password protection	Yes
• Encryption of blocks	Yes, using S7-Block Privacy
System functions (SFC)	See instruction list
System function blocks (SFB)	See instruction list
Dimensions	
• Mounting dimensions W x H x D (mm)	120 x 125 x 130
• Weight	1250 g
Voltages and currents	
• Power supply (rated value)	24 VDC
• Low limit of admissible range (DC)	19.2 V
• High limit of admissible range (DC)	28.8 V
• Current consumption (open-circuit), typically	500 mA
• Inrush current, typ.	4 A
• Current consumption (rated value)	1250 mA
• I^2t	1.2 A^2s
• External protection of power supply lines, min.	2 A
• Power loss, typically	14 W

Glossary

Accumulator

Accumulators represent CPU register and are used as buffer memory for download, transfer, comparison, calculation and conversion operations.

Address

An address is the identifier of a specific address or address area. Examples: Input I 12.1; Flag Word MW 25; Data Block DB 3.

Analog module

Analog modules convert process values (e.g. temperature) into digital values which can be processed in the CPU, or they convert digital values into analog manipulated variables.

Application

An application is a program that runs directly on the MS-DOS / Windows operating system. Applications on the programming device are for example STEP 7.

ASIC

ASIC is the acronym for Application Specific Integrated Circuits.

PROFINET ASICs are components with a wide range of functions for the development of your own devices. They implement the requirements of the PROFINET standard in a circuit and allow extremely high packing densities and performance.

Because PROFINET is an open standard, SIMATIC NET offers PROFINET ASICs for the development of your old devices under the name ERTEC .

Backplane bus

The backplane bus is a serial data bus. It supplies power to the modules and is also used by the modules to communicate with each other. Bus connectors interconnect the modules.

Backup memory

Backup memory ensures buffering of the memory areas of a CPU without backup battery. It backs up a configurable number of timers, counters, memory and data bytes,retentive timers, counters, memory bits and data bytes.

Bit memory

Bit memories are part of the CPU's system memory. They store intermediate results of calculations. They can be accessed in bit, word or dword operations.

See System memory

Bus

A bus is a communication medium connecting several nodes. Data can be transferred via serial or parallel circuits, that is, via electrical conductors or fiber optic.

Bus segment

A bus segment is a self-contained section of a serial bus system. Bus segments are interconnected by way of repeaters, for example, in PROFIBUS DP.

Central module

→ *CPU*

Changing IO devices during operation (changing partner ports)

Functionality of a PROFINET device.
A PROFINET device that supports this function can communicate during operation with changing communication partners at the same port.

Clock memory

flag bit which can be used to generate clock pulses in the user program (1 byte per flag bit).

Note

When operating with S7-300 CPUs, make sure that the byte of the clock memory bit is not overwritten in the user program!

Coaxial cable

A coaxial cable, also known as "coax", is a metal conductor system used in HF transmission circuits, for example, as radio and TV antenna cable, and in modern networks demanding high data transmission rates. The inner conductor of a coaxial cable is sheathed by a tube-like outer conductor. These conductors are separated by plastic insulation. In contrast to other cables, this type of cable provides a high degree of immunity to interference and EMC compatibility.

Code block

A SIMATIC S7 code block contains part of the **STEP 7** user program. (in contrast to a DB: this contains only data.)

Communication processor

Communication processors are modules used for point-to-point and bus topologies.

Component Based Automation

→ *PROFINET CBA*

Compress

The PG online function "Compress" is used to rearrange all valid blocks in CPU RAM in a contiguous area of load memory, starting at the lowest address. This eliminates fragmentation which occurs when blocks are deleted or edited.

Configuration

Assignment of modules to module racks/slots and (e.g. for signal modules) addresses.

Consistent data

Data which belongs together in terms of content and must not be separated is known as consistent data.

For example, the values of analog modules must always be handled as a whole, that is, the value of an analog module must not be corrupted as a result of read access at two different points of time.

Counters

Counters are part of CPU system memory. The content of "Counter cells" can be modified by **STEP 7** instructions (for example, up/down count.)

See also System memory

CP

→ *Communication processor*

CPU

Central processing unit = CPU of the S7 automation system with a control and arithmetic unit, memory, operating system, and interface for programming device.

Cycle control point

The cycle control point is the section of the CPU program processing in which the process image is updated.

Cycle time

The cycle time represents the time a CPU requires for one execution of the user program.

Cyclic interrupt

→ *Interrupt, cyclic interrupt*

Data block

Data blocks (DB) are data areas in the user program which contain user data. There are global data blocks which can be accessed by all code blocks, and instance data blocks which are assigned to a specific FB call.

Data exchange broadcast

→ *Direct data exchange*

Data exchange traffic

→ *Direct data exchange*

Data set routing

Functionality of a module with several network connections. Modules that support this function are able to pass on data of an engineering system (for example parameter data generated by SIMATIC PDM) from a subnetwork such as Ethernet to a field device at the PROFIBUS DP.

Data, static

Static data can only be used within a function block. These data are saved in an instance data block that belongs to a function block. Data stored in an instance data block are retained until the next function block call.

Data, temporary

Temporary data represent local data of a block. They are stored in the L-stack when the block is executed. After the block has been processed, these data are no longer available.

DB

→ *Data block*

DCP

DCP (**D**iscovery and Basic **C**onfiguration **P**rotocol). Enables the assignment of device parameters (e.g. the IP address) using manufacturer-specific configuration/programming tools.

Default router

The default router is the router that is used when data must be forwarded to a partner located within the same subnet.

In STEP 7, the default router is named *Router*. STEP 7 assigns the local IP address to the default router.

Detecting the network topology

LLDP (Link Layer Discovery Protocol) is a protocol that is used to detect the closest neighbors. It enables a device to send information about itself and to save information received from neighboring devices in the LLDP MIB. This information can be looked up via the SNMP. This information allows a network management system to determine the network topology.

Determinism

→ *Real Time*

Device

Within the context of PROFINET, "device" is the generic term for:

- Automation systems,
- Field devices (e.g. PLC, PC)
- Active network components (for example, distributed I/O, valve blocks, drives),
- hydraulic devices and
- pneumatic devices.

The main characteristic of a device is its integration in PROFINET communication over Ethernet or PROFIBUS.

The following device types are distinguished based on their attachment to the bus:

- PROFINET devices
- PROFIBUS devices

Device Name

Before an IO device can be addressed by an IO controller, it must have a device name. In PROFINET, this method was selected because it is simpler to work with names than with complex IP addresses.

The assignment of a device name for a concrete IO device can be compared with setting the PROFIBUS address of a DP slave.

When it ships, an IO device does not have a device name. An IO device can only be addressed by an IO controller, for example for the transfer of project engineering data (including the IP address) during startup or for user data exchange in cyclic operation, after it has been assigned a device name with the PG/PC .

Device replacement without removable medium/programming device

It is easy to replace IO devices that support this function:

- A removable medium (such as a SIMATIC Micro Memory Card) with stored device name is not required.
- The device name does not have to be assigned with the programming device.
- A replaced IO device that has already been put into operation must be reset to factory settings using the "Reset to factory settings" function.

The replaced IO device is assigned the device name by the IO controller and no longer from a removable media or programming device. The IO controller uses the configured topology and the neighboring relationships determined by the IO devices to this purpose. The configured target topology must coincide accordingly with the actual topology.

Diagnostic buffer

The diagnostics buffer represents a buffered memory area in the CPU. It stores diagnostic events in the order of their occurrence.

Diagnostic interrupt

Modules capable of diagnostics operations report detected system errors to the CPU by means of diagnostic interrupts.

Diagnostics

→ *System diagnostics*

Direct data exchange

Direct data exchange is a special communication relationship between PROFIBUS DP nodes. Direct data exchange is characterized by PROFIBUS DP nodes that "listen" on the bus and know which data a DP slave returns to its DP master.

DP master

A master which behaves in accordance with EN 50170, Part 3 is known as a DP master.

DP slave

A slave operated on PROFIBUS with PROFIBUS DP protocol and in accordance with EN 50170, Part 3 is referred to as DP slave.

DPV1

The designation DPV1 means extension of the functionality of the acyclical services (to include new interrupts, for example) provided by the DP protocol. The DPV1 functionality has been incorporated into IEC 61158/EN 50170, volume 2, PROFIBUS.

Electrically isolated

The reference potentials of the control and load circuit of isolated I/O modules are electrically isolated, for example, by means of optocouplers, relays or transformers. Input/output circuits may be grouped.

Equipotential bonding

Electrical connection (equipotential bonding conductor) which eliminates potential difference between electrical equipment and external conductive bodies by drawing potential to the same or near the same level, in order to prevent disturbing or dangerous voltages between these bodies.

Error display

One of the possible reactions of the operating system to a runtime error is to output an error message. Additional reactions: Error reaction in the user program, CPU in STOP.

Error handling via OB

After the operating system has detected a specific error (e.g. access error with **STEP 7**), it calls a dedicated block (Error OB) that determines additional CPU actions.

Error response

Reaction to a runtime error. Reactions of the operating system: It sets the automation system to STOP, indicates the error, or calls an OB in which the user can program a reaction.

ERTEC

→ *ASIC*

Fast Ethernet

Fast Ethernet describes the standard with which data is transmitted at 100 Mbps. Fast Ethernet uses the 100 Base-T standard.

FB

→ *Function block*

FC

→ *Function*

FEPROM

→ *Memory Card (MC)*

Flash EPROM

FEPROMs can retain data in the event of power loss, same as electrically erasable EEPROMs. However, they can be erased within a considerably shorter time (FEPROM = Flash Erasable Programmable Read Only Memory). They are used on Memory Cards.

Force

The Force function can be used to assign the variables of a user program or CPU (also: inputs and outputs) constant values.

In this context, please note the limitations listed in the *Overview of the test functions section in the chapter entitled Test functions, Diagnostics and Troubleshooting in the S7-300 Installation manual*.

Function

According to IEC 1131-3, a function (FC) is a code block without static data. A function allows parameters to be passed in the user program. Functions are therefore suitable for programming frequently occurring complex functions, e.g. calculations.

Function block

According to IEC 1131-3, a function block (FB) is a code block with static data. A function block allows parameters to be transferred to the user program. Function blocks are therefore suitable for programming frequently recurring, complex functions, e.g., rules, mode selection.

Functional ground

Grounding which has the sole purpose of safeguarding the intended function of electrical equipment. With functional grounding you short-circuit interference voltage which would otherwise have an unacceptable impact on equipment.

GD circuit

A GD circuit comprises a number of CPUs sharing data by means of global data communication, and is used as follows:

- A CPU broadcasts a GD packet to the other CPUs.
- A CPU sends and receives a GD packet from another CPU.

A GD circuit is identified by a GD circuit number.

GD element

A GD element is generated by assigning shared global data. It is identified by a unique global data ID in the global data table.

GD packet

A GD packet can consist of one or several GD elements transmitted in a single message frame.

Global data

Global data can be addressed from any code block (FC, FB, OB). In particular, this refers to bit memories M, inputs I, outputs Q, timers, counters and data blocks DB. Global data can be accessed via absolute or symbolic addressing.

Global data communication

Global data communication is a procedure that is used to transfer global data between CPUs (without SFCs/SFBs).

Ground

The conductive earth whose electrical potential can be set equal to zero at any point.

Ground potential can be different from zero in the area of grounding electrodes. The term reference ground is frequently used to describe this situation.

Grounding means, to connect an electrically conductive component via an equipotential grounding system to a grounding electrode (one or more conductive components with highly conductive contact to earth).

Chassis ground is the totality of all the interconnected passive parts of a piece of equipment on which dangerous fault-voltage cannot occur.

Ground

The conductive earth whose electrical potential can be set equal to zero at any point.

Ground potential can be different from zero in the area of grounding electrodes. The term reference ground is frequently used to describe this situation.

Grounding means, to connect an electrically conductive component via an equipotential grounding system to a grounding electrode (one or more conductive components with highly conductive contact to earth).

Chassis ground is the totality of all the interconnected passive parts of a piece of equipment on which dangerous fault-voltage cannot occur.

GSD file

The properties of a PROFINET device are described in a GSD file (General Station Description) that contains all the information required for configuration.

As with PROFIBUS, you can link a PROFINET device in STEP 7 by means of a GSD file.

In PROFINET IO, the GSD file is in XML format. The structure of the GSD file conforms to ISO 15734, which is the world-wide standard for device descriptions.

In PROFIBUS, the GSD file is in ASCII format.

Hardware interrupt

A hardware interrupt is triggered by interrupt-triggering modules as a result of a specific event in the process. The hardware interrupt is reported to the CPU. The assigned organization block will be processed according to interrupt priority.

HART

English: **H**ighway **A**ddressable **R**emote **T**ransducer

I-Device

The "I-Device" (intelligent IO device) functionality of a CPU facilitates data exchange with an IO controller and operation of the CPU, for example, as intelligent preprocessing unit of sub processes. Accordingly, the intelligent device is integrated into a "higher-level" IO controller, acting as IO device.

The functionality of the intelligent device ensures that the data is pre-processed in the user program on the CPU. The process values acquired from central or distributed locations (PROFINET IO or PROFIBUS DP) are pre-processed in the user program and provided to a higher-level station via PROFINET IO device interface of the CPU.

Industrial Ethernet

Industrial Ethernet (formerly SINEC H1) is a technology that allows data to be transmitted free of interference in an industrial environment.

Due to the openness of PROFINET, you can use standard Ethernet components. We recommend, however, that you install PROFINET as Industrial Ethernet.

Instance data block

The **STEP 7** user program assigns an automatically generated DB to every call of a function block. The instance data block stores the values of input, output and in/out parameters, as well as local block data.

Interface, MPI-compatible

→ *MPI*

Interrupt

The CPU's operating system distinguishes between different priority classes for user program execution. These priority classes include interrupts, e.g. process interrupts. When an interrupt is triggered, the operating system automatically calls an assigned OB. In this OB the user can program the desired response (e.g. in an FB).

Interrupt, cyclic interrupt

A cyclic interrupt is generated periodically by the CPU in a configurable time pattern. A corresponding OB will be processed.

Interrupt, diagnostic

→ *Diagnostic interrupt*

Interrupt, hardware

→ *Hardware interrupt*

Interrupt, status

A status interrupt can be generated by a DPV1 slave or a PNIO device respectively. At the DPV1 master or the PNIO controller respectively the receipt of the interrupt causes the OB 55 to be called up.

For detailed information on OB 56, refer to the *Reference Manual System Software for S7-300/400: System and Standard Functions*.

Interrupt, time-delay

The delay interrupt belongs to one of the priority classes in SIMATIC S7 program processing. It is generated on expiration of a time started in the user program. A corresponding OB will be processed.

Interrupt, time-delay

→ *Interrupt, time-delay*

Interrupt, time-of-day

The time-of-day interrupt belongs to one of the priority classes in SIMATIC S7 program processing. It is generated at a specific date (or daily) and time-of-day (e.g. 9:50 or hourly, or every minute). A corresponding OB will be processed.

Interrupt, update

An update interrupt can be generated by a DPV1 slave or a PNIO device respectively. At the DPV1 master or the PNIO controller respectively the receipt of the interrupt causes the OB 56 to be called up.

For detailed information on OB 56, refer to the *Reference Manual System Software for S7-300/400: System and Standard Functions*.

Interrupt, vendor-specific

A vendor-specific interrupt can be generated by a DPV1 slave or a PNIO device respectively. At the DPV1 master or the PNIO controller respectively, receipt of the interrupt causes the OB 57 to be called.

For detailed information on OB 57, refer to the *Reference Manual System Software for S7-300/400: System and Standard Functions*.

IP address

To allow a PROFINET device to be addressed as a node on Industrial Ethernet, this device also requires an IP address that is unique within the network. The IP address is made up of 4 decimal numbers with a range of values from 0 through 255. The decimal numbers are separated by a period.

The IP address is made up of

- The address of the (subnet) network and
- The address of the node (generally called the host or network node).

IRT

→ *Isochronous Real Time communications*

Isochronous mode

In order to maximize deterministic performance, the process data, the transmission cycle via PROFIBUS DP or PROFINET IO, as well as the user program are synchronized. The input and output data of the distributed IO devices in the system is acquired and output simultaneously. The isochronous PROFIBUS DP cycle/PROFINET IO cycle acts as the corresponding clock generator.

Isochronous Real Time communications

Synchronized transmission procedure for the cyclic exchange of IO data between PROFINET devices.
A reserved bandwidth within the send clock is available for the IRT / IO data. The reserved bandwidth guarantees that the IRT data can also be transferred even during another high network load (for example TCP/IP communication or additional real time communication) at reserved, synchronized intervals.

LAN

Local Area Network; interconnects multiple computers within a company. The geographical topology of a LAN is limited to the local premises and is only available to the operating company or institution.

LLDP

LLDP (Link Layer Discovery Protocol) is a protocol that is used to detect the closest neighbors. It enables a device to send information about itself and to save information received from neighboring devices in the LLDP MIB. This information can be looked up via the SNMP. This information allows a network management system to determine the network topology.

Load memory

This memory contains objects generated by the programming device. Load memory is implemented by means of a plug-in Micro Memory Card of different memory capacities. The SIMATIC Micro Memory Card must be inserted to allow CPU operation.

Load power supply

Power supply to the signal / function modules and the process I/O connected to them.

Local data

→ *Data, temporary*

MAC address

Each PROFINET device is assigned a worldwide unique device identifier in the factory. This 6-byte long device identifier is the MAC address.

The MAC address is divided up as follows:

- 3 bytes vendor identifier and
- 3 bytes device identifier (consecutive number).

The MAC address is normally printed on the front of the device.
Example: 08-00-06-6B-80-C0

Main memory

The main memory is integrated in the CPU and cannot be extended. It is used to run the code and process user program data. Programs only run in the main memory and system memory.

Master

When a master has the token, it can send data to other nodes and request data from other nodes (= active node).

Media redundancy

Function that ensures network and system availability. Redundant transmission links (ring topology) ensure that an alternative communication path is made available if a transmission link fails.

Memory Card (MC)

Memory Cards are memory media for CPUs and CPs. They are implemented in the form of RAM or FEPROM. An MC differs from a Micro Memory Card only in its dimensions (MC is approximately the size of a credit card).

Micro Memory Card (MMC)

Micro Memory Cards are memory media for CPUs and CPs. Their only difference to the Memory Card is the smaller size.

Module parameters

Module parameters are values which can be used to configure module behavior. A distinction is made between static and dynamic module parameters.

MPI

The multipoint interface (MPI) represents the programming device interface of SIMATIC S7. It enables multiple nodes (PGs, text-based displays, OPs) to be operated simultaneously by one or more CPUs. Each node is identified by its unique (MPI) address.

MPI address

→ *MPI*

NCM PC

→ *SIMATIC NCM PC*

Nesting depth

A block can be called from another by means of a block call. Nesting depth is referred to as the number of simultaneously called code blocks.

Network

A network consists of one or more interconnected subnets with any number of nodes. Several networks can exist alongside each other.

Network

A network is a larger communication system that allows data exchange between a large number of nodes.

All the subnets together form a network.

Non-isolated

The reference potential of the control and on-load power circuits of non-isolated I/O modules is electrically interconnected.

NTP

The Network Time Protocol (NTP) is a standard for synchronizing clocks in automation systems via Industrial Ethernet. NTP uses the UDP wireless network protocol.

OB

→ *Organization blocks*

OB priority

The CPU operating system distinguishes between different priority classes, for example, cyclic program processing, hardware interrupt controlled program processing. Each priority class is assigned organization blocks (OBs) in which the S7 user can program a response. The OBs are assigned different default priority classes. These determine the order in which OBs are executed or interrupt each other when they appear simultaneously.

Operating state

SIMATIC S7 automation systems know the following operating states: STOP, START, RUN.

Operating system

The CPU operating system organizes all the CPU functions and processes which are not associated with a specific control task.

Organization blocks

Organization blocks (OBs) form the interface between the CPU operating system and the user program. The order in which the user program is executed is defined in the organization blocks.

Parameters

1. Variable of a STEP 7 code block
2. Variable for declaring module response (one or several per module). All modules have a suitable basic factory setting which can be customized in STEP 7.
There are static and dynamic parameters.

Parameters, dynamic

Unlike static parameters, you can change dynamic module parameters during runtime by calling an SFC in the user program, e.g. limit values of an analog signal input module.

Parameters, static

Unlike dynamic parameters, static parameters of modules cannot be changed by the user program. You can only modify these parameters by editing your configuration in STEP 7, for example, modification of the input delay parameters of a digital signal input module.

PC station

→ *SIMATIC PC station*

PG

→ *Programming device*

PLC

→ *Programmable logic controller*

PLC

A PLC in the context of SIMATIC S7 --> is a programmable logic controller.

PNO

Technical committee that defines and additional develops the PROFIBUS and PROFINET standards with the following homepage: http://www.profinet.com.

Prioritized startup

The term prioritized startup denotes the PROFINET functionality for accelerating the startup of IO devices operated on a PROFINET IO system with RT and IRT communication.

The function reduces the time that configured IO devices require in order to return to cyclic user data exchange in the following scenarios:

- After the power supply has returned
- After a station has come back online
- After the activation of IO devices

Priority class

The S7 CPU operating system provides up to 26 priority classes (or "Program execution levels"). Specific OBs are assigned to these classes. The priority classes determine which OBs interrupt other OBs. Multiple OBs of the same priority class do not interrupt each other. In this case, they are executed sequentially.

Process image

The process image is part of CPU system memory. At the start of cyclic program execution, the signal states at the input modules are written to the process image of the inputs. At the end of cyclic program execution, the signal status of the process image of the outputs is transferred to the output modules.

Process-Related Function

→ *PROFINET components*

Product version

The product version identifies differences between products which have the same order number. The product version is incremented when forward-compatible functions are enhanced, after production-related modifications (use of new parts/components) and for bug fixes.

PROFIBUS

Process Field Bus - European field bus standard.

PROFIBUS device

A PROFIBUS device has at least one PROFIBUS connection to an electric interface (RS485), or to an optoelectronic interface (polymer optical fiber, POF).

A PROFIBUS device cannot take part directly in PROFINET communication but must be included over a PROFIBUS master with a PROFINET port or an Industrial Ethernet/PROFIBUS link (IE/PB Link) with proxy functionality.

PROFIBUS DP

A PROFIBUS with the DP protocol that complies with EN 50170. DP stands for distributed peripheral (IO) = fast, real-time, cyclic data exchange. From the perspective of the user program, the distributed IOs are addressed in exactly the same way as the central IOs.

PROFINET

Within the framework of Totally Integrated Automation (TIA), PROFINET represents a consistent continuation of:

- PROFIBUS DP, the established fieldbus and
- Industrial Ethernet, the communication bus for the cell level

Experience gained from both systems was and is being integrated into PROFINET.

PROFINET is an Ethernet-based automation standard of PROFIBUS International (previously PROFIBUS user organization) and defines a multi-vendor communication, automation, and engineering model.

PROFINET ASIC

→ *ASIC*

PROFINET CBA

Within the PROFINET system, PROFINET CBA (Component Based Automation) is an automation concept that focuses on the following:

- Implementation of modular applications
- Machine to machine communication

PROFINET CBA lets you create distributed automation solutions based on ready-to-use components and partial solutions. This concept meets demands for a higher degree of modularity in the field of mechanical and systems engineering through extensive distribution of intelligent processes.

Component Based Automation allows you to implement complete technological modules form operation as standardized components in large-scale systems.

You create the modular, intelligent components of PROFINET CBA using an engineering tool that could differ depending on the device manufacturer. Components that consist of SIMATIC devices are created in STEP 7 and interconnected using the SIMATIC iMAP tool.

PROFINET components

A PROFINET component includes the entire data of the hardware configuration, the parameters of the modules, and the corresponding user program. The PROFINET component is made up as follows:

- Technological Function

  The (optional) technological (software) function includes the interface to other PROFINET components in the form of interconnectable inputs and outputs.

- Device

  The device is the representation of the physical programmable controller or field device including the I/O, sensors and actuators, mechanical parts, and the device firmware.

PROFINET device

A PROFINET device always has at least one Industrial Ethernet port. PROFINET devices also support optional operation as proxy acting as representative that safeguards Ethernet communication between PROFIBUS devices (PROFIBUS-Slaves) connected to a PROFIBUS interface and additional PROFINET devices on the Ethernet.

PROFINET IO

Within the framework of PROFINET, PROFINET IO is a communication concept for the implementation of modular, distributed applications.

PROFINET IO allows you to create automation solutions which are familiar to you from PROFIBUS.

PROFINET IO is implemented based on the PROFINET standard for programmable controllers.

The STEP 7 engineering tool supports engineering and configuring of an automation solution.

STEP 7 therefore provides the same application view, regardless of whether you are configuring PROFINET or PROFIBUS devices. Generally speaking, the programs for your PROFINET IO and PROFIBUS DP applications are identical, however, for PROFINET IO you must use the extended SFCs/SFBs and system status lists.

PROFINET IO controller

Device used to address the connected IO devices. This means that the IO controller exchanges input and output signals with assigned field devices. The IO controller is often the controller on which the automation program runs.

PROFINET IO device

A distributed field device that is assigned to one of the IO controllers (e.g. remote IO, valve terminals, frequency converters, switches)

PROFINET IO Supervisor

Programming device, PC or HMI device used for commissioning and diagnostics.

PROFINET IO system

PROFINET IO controller with assigned PROFINET IO devices.

Programmable logic controller

Programmable controllers (PLCs) are electronic controllers whose function is stored as a program in the control unit. The structure and wiring of the device does not therefore depend on the controller's function. A programmable logic controller is structured like a computer. It consists of a CPU with memory, input/output modules and an internal bus system. The IOs and the programming language are oriented to control engineering needs.

Programming device

Programming devices are essentially compact and portable PCs which are suitable for industrial applications. They are identified by a special hardware and software for programmable logic controllers.

Proxy

The PROFINET device with proxy functionality is the substitute for a PROFIBUS device on Ethernet. The proxy functionality allows a PROFIBUS device to communicate not only with its master but also with all nodes on PROFINET.

You can integrate existing PROFIBUS systems into PROFINET communication, for example with the help of an IE/PB Link or a CPU 31x PN/DP. The IE/PB Link then handles communication over PROFINET as a substitute for the PROFIBUS components.

RAM

RAM (Random Access Memory) is a semiconductor read/write memory.

Real Time

Real time means that a system processes external events within a defined time.

Determinism means that a system reacts in a predictable (deterministic) manner.

In industrial networks, both these requirements are important. PROFINET meets these requirements. PROFINET is implemented as a deterministic real-time network as follows:

- The transfer of time-critical data between different stations over a network within a defined interval is guaranteed.

  To achieve this, PROFINET provides an optimized communication channel for real-time communication : Real Time (RT).
- An exact prediction of the time at which the data transfer takes place is possible.
- It is ensured that problem-free communication using other standard protocols, for example industrial communication for PG/PC can take place within the same network.

Real Time

→ *Real Time*

Reduction ratio

The reduction rate determines the send/receive frequency for GD packets on the basis of the CPU cycle.

Reference ground

→ *Ground*

Reference potential

Voltages of participating circuits are referenced to this potential when they are viewed and/or measured.

Restart

On CPU start-up (e.g. after is switched from STOP to RUN mode via selector switch or with POWER ON), OB100 (restart) is initially executed, prior to cyclic program execution (OB1). On restart, the input process image is read in and the STEP 7 user program is executed, starting at the first instruction in OB1.

Retentivity

A memory area is considered retentive if its contents are retained even after a power loss and transitions from STOP to RUN. The non-retentive area of memory flag bits, timers and counters is reset following a power failure and a transition from the STOP mode to the RUN mode.

Retentive can be the:

- Bit memory
- S7 timers
- S7 counters
- Data areas

Router

A router interconnects two subnets. A router works in a similar way to a switch. With a router, however, you can also specify which communication nodes may communicate via the router and which may not. The communication nodes on various sides of a router can only communicate with one another if you have explicitly enabled communication between these nodes via the router. Real-time data cannot be exchanged beyond subnet boundaries.

RT

→ *Real Time*

Runtime error

Errors occurred in the PLC (that is, not in the process itself) during user program execution.

Segment

→ *Bus segment*

SFB

→ *System function block*

SFC

→ *System function*

Shared Device

The "Shared Device" functionality makes it possible to distribute the submodules of an IO devices to different IO controllers.

Signal module

Signal modules (SM) form the interface between the process and the PLC. There are digital input and output modules (input/output module, digital) and analog input and output modules. (Input/output module, analog)

SIMATIC

The term denotes Siemens AG products and systems for industrial automation.

SIMATIC NCM PC

SIMATIC NCM PC is a version of STEP 7 tailored to PC configuration. For PC stations, it offers the full range of functions of STEP 7.

SIMATIC NCM PC is the central tool with which you configure the communication services for your PC station. The configuration data generated with this tool must be downloaded to the PC station or exported. This makes the PC station ready for communication.

SIMATIC NET

Siemens Industrial Communication division for Networks and Network Components.

SIMATIC PC station

A "PC station" is a PC with communication modules and software components within a SIMATIC automation solution.

Slave

A slave can only exchange data after being requested to do so by the master.

SNMP

SNMP (Simple Network Management Protocol) makes use of the wireless UDP transport protocol. It consists of two network components, similar to the client/server model. The SNMP Manager monitors the network nodes, and the SNMP agents collect the various network-specific information in the individual network nodes and places it in a structured form in the MIB (Management Information Base). This information allows a network management system to run detailed network diagnostics.

SSL

→ *System status list*

STARTUP

A START-UP routine is executed at the transition from STOP to RUN mode. Can be triggered by means of the mode selector switch, or after power on, or by an operator action on the programming device. An S7-300 performs a restart.

STEP 7

STEP 7 is an engineering system and contains programming software for the creation of user programs for SIMATIC S7 controllers.

Subnet mask

The bits set in the subnet mask decides the part of the IP address that contains the address of the subnet/network.

In general:

- The network address is obtained by an AND operation on the IP address and subnet mask.
- The node address is obtained by an AND NOT operation on the IP address and subnet mask.

Subnetwork

All the devices interconnected by switches are nodes of the same network or subnet. All the devices in a subnet can communicate directly with each other.

All devices in the same subnet have the same subnet mask.

A subnet is physically restricted by a router.

Substitute

→ *Proxy*

Substitute value

Substitute values are configurable values which output modules transfer to the process when the CPU switches to STOP mode.

In the event of an I/O access error, a substitute value can be written to the accumulator instead of the input value which could not be read (SFC 44).

Switch

In contrast to PROFIBUS DP, Industrial Ethernet is made up of point-to-point links: Each communication node is connected directly to one other communication node.

Multiple communication nodes are interconnected at the port of an active network component, that is, at the switch. Other communications nodes (including switches) can then be connected to the other ports of the switch. The connection between a communication node and the switch remains a point-to-point link.

The task of a switch is therefore to regenerate and distribute received signals. The switch "learns" the Ethernet address(es) of a connected PROFINET device or other switches and forwards only the signals intended for the connected PROFINET device or connected switch.

A switch has a certain number of ports. At each port, connect a maximum of one PROFINET device or a further switch.

Two switch models are available in PROFINET IO systems: as external switch with enclosure, or as component of an S7 CPU or S7 CP, or of a distributed I/O system ET 200, e.g., as in the S7 CPU 317-2 PN/DP.

In our SCALANCE X device family you will find switches with electrical and optical ports or with a combination of both variants. The SCALANCE X202-2IRT, for example, has 2 electrical ports and 2 optical ports and supports IRT communication.

With STEP 7, you can configure and perform diagnostics on and address switches from the SCALANCE X device family as PROFINET IO devices.

System diagnostics

System diagnostics refers to the detection, evaluation, and signaling of errors that occur within the PLC, for example programming errors or module failures. System errors can be indicated by LEDs or in **STEP 7**.

System function

A system function (SFC) is a function that is integrated in the operating system of the CPU and can be called in the STEP 7 user program, when necessary.

System function block

A system function block (SFB) is a function block integrated in the CPU operating system that can be called in the STEP 7 user program when required.

System memory

System memory is an integrated RAM memory in the CPU. System memory contains the address areas (e.g. timers, counters, bit memories) and data areas that are required internally by the operating system (for example, communication buffers).

System status list

The system status list contains data that describes the current status of a SIMATIC S7. You can always use this list to obtain an overview of the following points:

- Status of the SIMATIC S7 extension.
- The current CPU configuration and configurable signal modules.
- The current states and processes in the CPU and in configurable signal modules.

Terminating resistor

The terminating resistor is used to avoid reflections on data links.

Timer

→ *Timers*

Timers

Timers are part of CPU system memory. The content of timer cells is automatically updated by the operating system, asynchronously to the user program. **STEP 7** instructions are used to define the precise function of the timer cell (for example, on-delay) and to initiate their execution (for example, start).

TOD interrupt

→ *Interrupt, time-of-day*

Token

Allows access to the bus for a limited time.

Topology

Network structure. Commonly used structures:

- Linear bus topology
- Ring topology
- Star topology
- Tree topology

Topology configuration

All the interconnected ports of the PROFINET devices in STEP 7 projects and their relationships to each other.

Transmission rate

Data transfer rate (in bps)

Twisted-pair

Fast Ethernet via twisted-pair cables is based on the IEEE 802.3u standard (100 Base-TX). The transmission medium is a shielded 2x2 twisted-pair cable with an impedance of 100 Ω (AWG 22). The transmission characteristics of this cable must meet the requirements of category 5.

The maximum length of the connection between the terminal and the network component must not exceed 100 m. The connections are implemented according to the 100 Base-TX standard with the RJ-45 connector system.

UDT

User Defined Type: User-defined data type with any design.

Ungrounded

Having no direct electrical connection to ground

Update time

Within this interval new data are supplied to an IO device / IO controller in the PROFINET IO system by the IO controller / IO device. The send cycle can be configured separately for each IO device and determines the interval at which data are sent from the IO controller to the IO device (outputs) as well as data from the IO device to the IO controller (inputs).

User program

In SIMATIC, we distinguish between the operating systems of the CPU and user programs. The user program contains all instructions, declarations and data for signal processing through which a system or process can be controlled. It is assigned to a programmable module (for example CPU, FM) and can be structured in smaller units (blocks).

Varistor

Voltage-dependent resistor

WAN

A network beyond LAN boundaries which allows, for example, intercontinental communication. Legal rights do not belong to the user but to the provider of the communication network.

Index

A

Ambient condition
- Climatic, 210
- Mechanical, 209
- Operating conditions, 209

Analog I/O devices
- Hardware low-pass filter, 280
- Input filter, 281

Analog inputs, 294
- Not connected, 283
- Parameterization, 286
- Technical specifications, 295

Analog outputs, 297
- Not connected, 283
- Parameterization, 287
- Technical specifications, 297

Approvals, 201
- CE, 202
- CSA, 202
- FM, 203
- IEC 61131, 204
- Marine, 204
- UL, 202
- Use in industrial environments, 204
- Use in residential areas, 205

B

Backing up project data, 169

Block
- Delete, 163
- Encrypting, 161
- Overwriting, 162
- PROFIBUS, 140
- PROFINET, 140
- Reloading, 162
- Runtime modification by encryption, 162
- Upload, 163

C

Calculation
- Cycle time, calculation method, 192
- Response time, calculation method, 192

CE approval, 202

Clock synchronization, 77
- MPI interface, 77
- PROFINET interface, 78

Communication
- Communication protocols, 81
- CPU services, 65
- Data consistency, 79
- Data record routing, 76
- Global data communication, 70
- OP communication, 68
- Open IE communication, 81
- PG communication, 67
- Point-to-point connection, 79
- Routing, 71
- S7 basic communication, 68
- S7 communication, 69
- Web server, 115

Communication load
- configured, 180
- Dependency of actual cycle time, 181
- Influence on the actual cycle time, 181

Component Based Automation, 135

Compressing, 163

Connection resources
- Distribution, 87
- Example, 90

CPU 312, Technical specifications, 303

CPU 312C
- Integrated inputs/outputs, 273
- Technical specifications, 215

CPU 313C, Technical Specifications, 224

CPU 313C-2 DP, Technical Specifications, 233

CPU 313C-2 PtP, Technical Specifications, 233

CPU 314, Technical specifications, 311

CPU 314C-2 DP, Technical Specifications, 245

CPU 314C-2 PtP, Technical Specifications, 245

CPU 315-2 DP, Technical specifications, 319

CPU 315-2 PN/DP, Technical specifications, 329

CPU 317-2 DP
- Mode selector, 49
- Operator controls and indicators, 47
- Technical specifications, 344

CPU 317-2 PN/DP, Technical specifications, 355

CPU 319-3 PN/DP
- Operator controls and indicators, 52
- Technical specifications, 370

CPU 31x
Mode selector, 46
Operator controls and indicators, 45
Status and error indicators, 54
CPU 31x-2 PN/DP
Mode selector, 51
Operator controls and indicators, 50
CPU 31xC
Mode selector, 23, 26, 29, 32, 35, 39, 43
Operator controls and indicators, 30
CSA approval, 202
Cycle time, 192
Calculation, 174, 192
Extension, 174
Introduction, 172
Reacting to events, 178
Sample calculation, 193
Sequence of cyclic program processing, 173
Cycle time extension
CBA (Component Based Automation), 183
Test and commissioning, 182
Cyclic interrupt, 198

D

Data consistency, 79
Data record routing, 76
DB
Instructions List, 151
Retentive behavior, 151
Degree of protection IP 20, 211
Delete, 163
Diagnostics, 290
Digital inputs, 290
Parameterization, 284
Technical specifications, 291
Digital outputs, 292
Parameterization, 285
Technical specifications, 293
Display elements, 41
CPU 317-2 DP, 47
CPU 319-3 PN/DP, 52
CPU 31x, 45
CPU 31x-2 PN/DP, 50
CPU 31xC, 30
Download, user program, 160
DPV1, 91

E

Electromagnetic compatibility (EMC), 206
Electrostatic discharge, 206
EMC (Electromagnetic compatibility), 206
Disturbance variables, 206
Radio interference, 207
Encryption, 161
Error display
CPU 31x, 54
Example
Cycle time, 193
Interrupt response time, 199
Response time, 194
Routing, 74

F

FM approval, 203

G

Gateway, 71
Global data communication, 70

H

Hardware interrupt processing, 197

I

I/O, integrated, 272
Analog I/O devices, 278
Analog inputs, 294
Analog outputs, 297
Diagnostics, 290
Digital inputs, 290
Digital outputs, 292
Interrupt inputs, 289
Parameterization, 283
I-Device, 146
IEC 61131, 204
Industrial Ethernet, 81, 135
Insulation test, 211
Integrated inputs and outputs, 272
Technological functions and standard I/Os, 277
Usage, 272
Interface
MPI, 57
PROFIBUS DP, 58
PROFINET, 59
PtP, 64
Interrupt inputs, 289

OB 40, 289
Parameterization, 284
Interrupt response time, 199
Calculation, 196
CPUs, 197
Hardware interrupt processing, 197
Sample calculation, 199
Signal modules, 197
Interrupt, reproducibility, 198
Interruption of communication for CPUs with integrated switch
CPU memory resets, firmware updates and power-offs, 62
IRT (Isochronous Real-Time)
Odd send clock, 62
Options, 143
Isochronous mode, 146
Isochronous Real-Time, 62

L

Load memory
MMC, 149
Local data, 157

M

Main memory, 150
Marine approval, 204
Measured value archive, 167
Media redundancy, 148
Media redundancy protocol, 148
Memory
Backing up project data, 169
Compressing, 163
Load memory, 149
Main memory, 150
Measured value archive, 167
Recipe, 165
Retentive behavior, 151
Retentive data, 150
System memory, 149
Memory functions, 159
Memory reset, 164
RAM to ROM, 163
Restart, 164
Upload, 163
Warm restart, 164
Memory reset, 164
Micro Memory Card, 158
MMC, 149
Mode selector
CPU 317-2 DP, 49
CPU 319-3 PN/DP, 54
CPU 31x, 46
CPU 31x-2 PN/DP, 51
CPU 31xC, 23, 26, 29, 32, 35, 39, 43
MPI (multi-point interface)
Interface, 57
MPI interface
Clock synchronization, 77
Connectable devices, 57
MRP (Media Redundancy Protocol), 148

O

OBs
PROFIBUS, 142
PROFINET, 142
OP communication
Prioritized OCM communication, 68
Properties, 68
open IE communication), 82
Data blocks, 82
Disconnecting, 83
Establishing a connection, 83
Operating elements, 41
CPU 317-2 DP, 47
CPU 319-3 PN/DP, 52
CPU 31x, 45
CPU 31x-2 PN/DP, 50
CPU 31xC, 30
Overview
PROFINET IO functions, 138

P

Parameterization
Interrupt inputs, 284
Standard AI, 286
Standard AO, 287
Standard DI, 284
Standard DO, 285
PG communication, 67
Point-to-point connection, 79
Port, 64
Prioritized startup, 144
Process input/output image, 154
PROFIBUS, 140
SFBs, 140
SFCs, 140
PROFIBUS DP interface, 58

Connectable devices, 59
Operating modes with two DP interfaces, 58
PROFIBUS International, 136
PROFINET
Compatibility with CPUs < V3.1, 60
Device replacement without removable medium, 145
Intelligent IO device, 146
Interface, 59
Introduction, 135
IO devices changing at runtime, 145
IRT, 143
Isochronous mode, 146
Media redundancy, 148
Prioritized startup, 144
SFBs, 140
SFCs, 140
Shared Device, 147
PROFINET CBA, 135
Cycle time extension, 183
Distinguishing features compared to IO, 137
PROFINET interface
Addressing the ports, 61
Clock synchronization, 78
Configuring port properties, 63
Connectable devices, 60
Deactiving port, 64
Port addressing, 64
Send clock, 61
Update time, 61
PROFINET IO, 138
Distinguishing features compared to CBA, 137
Overview of functions, 138
Promming, 163
Protection class, 211
PtP interface, 64

R

Radio interference, 207
RAM to ROM, 163
Recipe, 165
Recycling, 7
Response time
Calculation, 192
DP cycle times, 188
Introduction, 187
Longest, calculation, 191
Longest, conditions, 190
Reduction with direct I/O access, 191
Sample calculation, 194
Shortest, calculation, 189
Shortest, conditions, 189
Update times for PROFINET IO, 188
Restart, 164
Retentivity
Behavior of the memory objects, 151
DB, 151
Memory, 150
Ring topology, 148
Routing
Connection resources, 89
Example TeleService, 74
Gateway, 71
General, 71
Number of connections, 72
Requirements, 73

S

S7 basic communication, 68
S7 communication, 69
S7 connections
CPUs 31xC, 88
Distribution, 87
End point, 84
Pin assignments, 85
Time sequence for allocation, 86
Transition point, 84
Scan cycle monitoring time, 179
Scope of the manual, 3
Scope of this documentation, 13
Send clock
Odd for IRT, 62
PROFINET, 61
SFBs
PROFIBUS, 140
PROFINET, 140
SFCs
PROFIBUS, 140
PROFINET, 140
Shared Device, 147
Shipping conditions, 208
SIMATIC Micro Memory Card
Compatible Micro Memory Cards, 214, 302
Load user program, 160
Project data, 169
Properties, 158
Slot, 54
Useful life, 159
Simple Network Management Protocol, 80
SNMP, 80
Standards, 201
Status indication

CPU 31x, 54
Storage conditions, 208
System memory, 149
Address areas, 153
Local data, 157
Process image, 154

T

Technical specifications
Analog inputs, 295
Analog outputs, 297
CPU 312, 303
CPU 312C, 215
CPU 313C, 224
CPU 313C-2 DP, 233
CPU 313C-2 PtP, 233
CPU 314, 311
CPU 314C-2 DP, 245
CPU 314C-2 PtP, 245
CPU 315-2 DP, 319
CPU 315-2 PN/DP, 329
CPU 317-2 DP, 344
CPU 317-2 PN/DP, 355
CPU 319-3 PN/DP, 370
Digital inputs, 291
Digital outputs, 293
Electromagnetic compatibility (EMC), 206
Shipping and storage conditions, 208
Standards and certifications, 201
Test voltage, 211
Time-delay interrupt, 198
Topology, 120

U

UL approval, 202
Update time
CPU 31x PN/DP, 62
PROFINET interface, 61
Upload, 163
User program
Download, 160
Measured value archive, 167
Recipe, 165
Upload, 163

W

Warm restart, 164
Web access
Via HMI devices and PDA, 94
Via PG/PC, 94
Web server - general
Compatible web browser, 93
HW Config, settings, 97
Language settings, 95
Safety functions, 95
Updating and saving, 100
Web server - web pages
Communication, 115
Diagnostic buffer, 104
Identification, 103
Messages, 113
Module information, 106
Start page, 101
Status of the variables, 127
Topology, 120
Topology - graphical view, 121
Topology - status overview, 126
Topology - tabular view, 124
User pages, 131
Variable table, 128

SIEMENS

SIMATIC

S7-300 CPU 31xC and CPU 31x: Installation

Operating Instructions

Preface

Guide to the S7-300 documentation 1

Installation Sequence 2

S7-300 components 3

Configuring 4

Installing 5

Wiring 6

Addressing 7

Commissioning 8

Maintenance 9

Debugging functions, diagnostics and troubleshooting 10

General technical specifications 11

Appendix A

This manual is part of the documentation package with order number:
6ES7398-8FA10-8BA0

03/2011
A5E00105492-12

Legal information

Warning notice system

This manual contains notices you have to observe in order to ensure your personal safety, as well as to prevent damage to property. The notices referring to your personal safety are highlighted in the manual by a safety alert symbol, notices referring only to property damage have no safety alert symbol. These notices shown below are graded according to the degree of danger.

⚠ DANGER
indicates that death or severe personal injury **will** result if proper precautions are not taken.

⚠ WARNING
indicates that death or severe personal injury **may** result if proper precautions are not taken.

⚠ CAUTION
with a safety alert symbol, indicates that minor personal injury can result if proper precautions are not taken.

CAUTION
without a safety alert symbol, indicates that property damage can result if proper precautions are not taken.

NOTICE
indicates that an unintended result or situation can occur if the corresponding information is not taken into account.

If more than one degree of danger is present, the warning notice representing the highest degree of danger will be used. A notice warning of injury to persons with a safety alert symbol may also include a warning relating to property damage.

Qualified Personnel

The product/system described in this documentation may be operated only by **personnel qualified** for the specific task in accordance with the relevant documentation for the specific task, in particular its warning notices and safety instructions. Qualified personnel are those who, based on their training and experience, are capable of identifying risks and avoiding potential hazards when working with these products/systems.

Proper use of Siemens products

Note the following:

⚠ WARNING
Siemens products may only be used for the applications described in the catalog and in the relevant technical documentation. If products and components from other manufacturers are used, these must be recommended or approved by Siemens. Proper transport, storage, installation, assembly, commissioning, operation and maintenance are required to ensure that the products operate safely and without any problems. The permissible ambient conditions must be adhered to. The information in the relevant documentation must be observed.

Trademarks

All names identified by ® are registered trademarks of the Siemens AG. The remaining trademarks in this publication may be trademarks whose use by third parties for their own purposes could violate the rights of the owner.

Disclaimer of Liability

We have reviewed the contents of this publication to ensure consistency with the hardware and software described. Since variance cannot be precluded entirely, we cannot guarantee full consistency. However, the information in this publication is reviewed regularly and any necessary corrections are included in subsequent editions.

이 기기는 업무용(A급) 전자파 적합기기로서 판매자 또는 사용자는 이 점을 주의하시기 바라며 가정 외의 지역에서 사용하는 것을 목적으로 합니다.

Siemens AG
Industry Sector
Postfach 48 48
90026 NÜRNBERG
GERMANY

A5E00105492-12
Ⓟ 04/2011

Copyright © Siemens AG 2011.
Technical data subject to change

Preface

Purpose of this manual

This manual contains essential information about the following:

- Installation
- Communication
- Memory concept
- Cycle and response times
- Technical specifications of the CPUs.

Basic knowledge required

- In order to understand this manual, you require a general knowledge of automation engineering.
- You require knowledge of STEP 7 basic software.

Scope

The name CPU 31xC summarizes all compact CPUs, as table below shows:

CPU	Convention: CPU designations:	Order number	As of firmware version
CPU 312C	CPU 31xC	6ES7312-5BF04-0AB0	V3.3
CPU 313C		6ES7313-5BG04-0AB0	V3.3
CPU 313C-2 PtP		6ES7313-6BG04-0AB0	V3.3
CPU 313C-2 DP		6ES7313-6CG04-0AB0	V3.3
CPU 314C-2 PtP		6ES7314-6BH04-0AB0	V3.3
CPU 314C-2 DP		6ES7314-6CH04-0AB0	V3.3
CPU 314C-2 PN/DP		6ES7314-6EH04-0AB0	V3.3

The name CPU 31x summarizes all standard CPUs, as table below shows:

CPU	Convention: CPU designations:	Order number	As of firmware version
CPU 312	CPU 31x	6ES7312-1AE14-0AB0	V3.3
CPU 314		6ES7314-1AG14-0AB0	V3.3
CPU 315-2 DP		6ES7315-2AH14-0AB0	V3.3
CPU 315-2 PN/DP		6ES7315-2EH14-0AB0	V3.2
CPU 317-2 DP		6ES7317-2AK14-0AB0	V3.3
CPU 317-2 PN/DP		6ES7317-2EK14-0AB0	V3.2
CPU 319-3 PN/DP		6ES7318-3EL01-0AB0	V3.2

All CPUs with PROFINET properties are grouped under the designation CPU 31x PN/DP, as the following table shows:

CPU	Convention: CPU designations:	Order number	As of firmware version
CPU 314C-2 PN/DP	CPU 31x PN/DP	6ES7314-6EH04-0AB0	V3.3
CPU 315-2 PN/DP		6ES7315-2EH14-0AB0	V3.2
CPU 317-2 PN/DP		6ES7317-2EK14-0AB0	V3.2
CPU 319-3 PN/DP		6ES7318-3EL01-0AB0	V3.2

Note

A description of the special features of the failsafe CPUs of the S7 product range is available in the product information at the following Internet address (http://support.automation.siemens.com/WW/view/en/11669702/133300).

Note

We reserve the right to include a product Information containing the latest information on new modules or modules of a more recent version.

Changes in comparison to the previous version

The following table contains changes from the previous versions of the following documentation from the S7-300 documentation package:

- Technical specifications manual, version 06/2010
- Operating instructions for installation, version 06/2010

The CPU- 314C-2 PN/DP has been added in delivery stage V3.3. It has the same functionalities as the CPU 314C-2 DP and also has PROFINET functionalities such as those of the CPU 315-2 PN/DP.

In delivery stage V3.3, the functionality and performance of all C-CPUs and the CPU 317-2 DP were improved compared to their predecessor versions.

Additional information was taken from the chapter "Information on converting to a CPU 31xC or CPU 31x". If you required more information, however, please refer to the FAQs () on the Internet.

CPU	312	312C	313C	313C-2 DP	313C-2 PtP	314	314C-2 DP	314C-2 PtP	315-2 DP	317-2 DP
Encryption of blocks using S7-Block Privacy	X	X	X	X	X	X	X	X	X	X
Integration of a maintenance LED	X[1, 2]	X [2]	X [2]	X [2]	X [2]	X[1, 2]	X [2]	X [2]	X[1, 2]	X [2]
Configurable increase of control and monitoring performance	-	-	-	-	-	-	-	-	X	X
Improved operational limits for PT100 Analog input	-	-	X	-	-	-	X	X	-	-
Data set routing	-	-	-	X	-	-	X	-	X [1]	X
Configurable process image	X [1]	X	X	X	X	X [1]	X	X	X [1]	X
Expansion of the block number range	X [1]	X	X	X	X	X [1]	X	X	X [1]	X
Number of displayed diagnostic buffer entries can be configured in CPU RUN mode	X [1]	X	X	X	X	X [1]	X	X	X [1]	X
Reading out the service data	X [1]	X	X	X	X	X [1]	X	X	X [1]	X
Extension of SFC 12 with 2 new modes to trigger the OB 86 during enabling/disabling	-	-	-	X	-	-	X	-	X [1]	X
Copying of 512 bytes with SFC 81	X [1]	X	X	X	X	X [1]	X	X	X [1]	X

CPU	312	312C	313C	313C-2 DP	313C-2 PtP	314	314C-2 DP	314C-2 PtP	315-2 DP	317-2 DP
Increase										
Main memory	X [1]	X	X	X	X	X [1]	X	X	X [1]	X
Performance through shorter command processing times	X [1]	X	X	X	X	X [1]	X	X	X [1]	X
Status information that can be monitored by the status block, in STEP 7 V5.5 or higher	X [1]	X	X	X	X	X [1]	X	X	X [1]	X
Number of blocks that can be monitored by the status block (from 1 to 2)	X [1]	X	X	X	X	X [1]	X	X	X [1]	X
Number of breakpoints from 2 to 4	X [1]	X	X	X	X	X [1]	X	X	X [1]	X
Local data stack	X [1]	X	X	X	X	X [1]	X	X	X [1]	X
Number of block-related messages (Alarm_S) is uniformly limited to 300	X [1]	X	X	X	X	X [1]	X	X	X [1]	X
Number of the bit memories, timers and counters	X [1]	X	-	-	-	-	-	-	-	-
Standardization										
DB sizes: Max. 64 KB	X[1, 3]	X	X	X	X	X [1]	X	X	X [1]	X [1]
Watchdog interrupts: OB 32 to OB 35	X [1]	X	X	X	X	X [1]	X	X	X [1]	X [1]
Global data communication of 8 GD circles	X [1]	X	X	X	X	X [1]	X	X	X [1]	X [1]
System function blocks for integrated technology functions:										
SFB 41 to 43	-	-	X [1]	X [1]	X [1]	-	X [1]	X [1]	-	-
SFB 44 and 46	-	-	-	-	-	-	X [1]	X [1]	-	-
SFB 47 to 49	-	X [1]	X [1]	X [1]	X [1]	-	X [1]	X [1]	-	-
SFB 60 to 62	-	-	-	-	X [1]	-	-	X [1]	-	-
SFB 63 to 65	-	-	-	-	-	-	-	X [1]	-	-

[1] This function was already made available to the CPU in an earlier version

[2] Available, but without function

[3] Max. DB size 32 KB

Standards and certifications

For information about standards and approvals, see the section "General technical specifications (Page 251)".

Recycling and disposal

Because they have ecologically compatible components, the devices described in this manual can be recycled. For environment-friendly recycling and disposal of your old equipment, contact a certified disposal facility for electronic scrap.

Service & Support on the Internet

In addition to our documentation, we offer a comprehensive knowledge base online on the Internet (http://www.siemens.com/automation/service&support).

There you will find:

- Our newsletter containing up-to-date information on your products
- The latest documents in the Siemens Service & Support (http://www.siemens.com/automation/service&support) search engine.
- A forum for global information exchange by users and specialists.
- Your local representative for automation and drives in our contact database
- Information about on-site services, repairs, spare parts, and lots more.
- Applications and tools for the optimized use of the SIMATIC S7. For example, Siemens also publishes DP and PN performance measurements on the Internet (http://www.siemens.com/automation/pd).

Table of contents

Preface 3

1 Guide to the S7-300 documentation 15

1.1 Documentation classification 15

1.2 Guide to the S7-300 documentation 20

2 Installation Sequence 23

3 S7-300 components 25

3.1 Example of an S7-300 configuration 25

3.2 Overview of the most important S7-300 modules 26

4 Configuring 29

4.1 Overview 29

4.2 Basic configuration principles 29

4.3 Component dimensions 32

4.4 Specified clearances 34

4.5 Arrangement of modules on a single rack 35

4.6 Distribution of modules to several racks 36

4.7 Selection and installation of cabinets 39

4.8 Example: Selecting a cabinet 41

4.9 Electrical assembly, protective measures and grounding 43
4.9.1 Grounding concept and overall structure 43
4.9.2 Installing an S7-300 with grounded reference potential 44
4.9.3 Installing an S7-300 with ungrounded reference potential (not CPU 31xC) 45
4.9.4 Isolated or non-isolated modules? 46
4.9.5 Grounding measures 49
4.9.6 Overview: Grounding 52

4.10 Selection of the load power supply 54

4.11 Planning subnets 56
4.11.1 Overview 56
4.11.2 Configuring MPI and PROFIBUS subnets 58
4.11.2.1 Overview 58
4.11.2.2 Basic information relating to MPI and PROFIBUS subnets 58
4.11.2.3 Multi-Point Interface (MPI) 61
4.11.2.4 PROFIBUS DP interface 62
4.11.2.5 Network components of MPI/DP and cable lengths 63
4.11.2.6 Cable lengths of MPI and PROFIBUS subnets 68

4.11.3 Configuring PROFINET subnets ... 73
4.11.3.1 Overview ... 73
4.11.3.2 PROFINET devices ... 73
4.11.3.3 Integration of fieldbuses into PROFINET ... 77
4.11.3.4 PROFINET IO and PROFINET CBA ... 78
4.11.3.5 PROFINET cable lengths and network expansion ... 85
4.11.3.6 Connectors and other components for Ethernet ... 88
4.11.3.7 Example of a PROFINET subnet ... 88
4.11.3.8 PROFINET IO System ... 90
4.11.4 Routed network transitions ... 92
4.11.5 Point-to-point (PtP) ... 94
4.11.6 Actuator/sensor interface (ASI) ... 94

5 Installing ... 95

5.1 Installing an S7-300 ... 95

5.2 Installing the mounting rail ... 97

5.3 Installing modules on the mounting rail ... 100

5.4 Labeling modules ... 102

6 Wiring ... 105

6.1 Requirements for wiring the S7-300 ... 105

6.2 Bonding the Protective Conductor to the Mounting Rail ... 107

6.3 Adjusting the power supply module to local mains voltage ... 108

6.4 Wiring the power supply module and the CPU ... 109

6.5 Wiring front connectors ... 111

6.6 Plugging the front connectors into modules ... 114

6.7 Wiring I/O modules and compact CPUs with Fast Connect ... 115

6.8 Labeling the module I/Os ... 120

6.9 Terminating shielded cables on the shield connection element ... 121

6.10 Wiring bus connectors ... 124
6.10.1 MPI/PROFIBUS bus connector ... 124
6.10.2 Setting up the terminating resistor on the PROFIBUS connector ... 125
6.10.3 PROFINET bus connector ... 126

7 Addressing ... 127

7.1 Slot-specific addressing of modules ... 127

7.2 User-specific addressing of modules ... 129
7.2.1 User-specific addressing of modules ... 129
7.2.2 Addressing digital modules ... 130
7.2.3 Addressing analog modules ... 131
7.2.4 Addressing the integrated I/Os of CPU 31xC ... 132

7.3 Addressing on PROFIBUS DP ... 135

7.4 Addressing PROFINET IO ... 136

7.5 Assigning IP address parameters and the device name ... 137

8 Commissioning 141
8.1 Overview 141
8.2 Commissioning procedure 141
8.2.1 Procedure: Commissioning the hardware 141
8.2.2 Procedure: Software commissioning 143
8.3 Commissioning check list 145
8.4 Commissioning the Modules 147
8.4.1 Inserting/replacing a Micro Memory Card 147
8.4.2 Initial power on 149
8.4.3 CPU memory reset by means of mode selector switch 150
8.4.4 Formatting the Micro Memory Card 154
8.4.5 Connecting the programming device (PG) 155
8.4.5.1 Connect PG/PC to the integrated PROFINET interface of the CPU 31x PN/DP 155
8.4.5.2 Connecting the PG to a node 156
8.4.5.3 Connecting the PG to several nodes 157
8.4.5.4 Using the PG for commissioning or maintenance 158
8.4.5.5 Connecting a PG to ungrounded MPI nodes (not CPU 31xC) 160
8.4.6 Starting SIMATIC Manager 161
8.4.7 Monitoring and modifying inputs and outputs 161
8.5 Commissioning PROFIBUS DP 166
8.5.1 Commissioning the PROFIBUS DP network 166
8.5.2 Commissioning the CPU as DP master 168
8.5.3 Commissioning the CPU as DP Slave 172
8.5.4 Direct data exchange 178
8.6 Commissioning PROFINET IO 180
8.6.1 Requirements 180
8.6.2 Commissioning the PROFINET IO system 181
8.6.3 Configuring the PROFINET IO system 182
9 Maintenance 189
9.1 Overview 189
9.2 Backing up firmware on a SIMATIC Micro Memory Card 189
9.3 Updating the firmware 191
9.3.1 Firmware update using a Micro Memory Card 192
9.3.2 Updating the firmware online (via networks) 193
9.4 Backup of project data to a Micro Memory Card 195
9.5 Resetting to the Delivery State 197
9.6 Module installation/removal 198
9.7 Digital output module: Changing fuses 202
10 Debugging functions, diagnostics and troubleshooting 205
10.1 Overview 205
10.2 Reading out service data 205
10.3 Identification and maintenance data of the CPU 206
10.4 Overview: Debugging functions 208

10.5 Overview: Diagnostics ... 212
10.6 Diagnostics functions available in STEP 7 ... 216
10.7 Network infrastructure diagnostics (SNMP) ... 217
10.8 Diagnostics using status and error LEDs ... 219
10.8.1 Introduction ... 219
10.8.2 Status and error displays of all CPUs ... 219
10.8.3 Evaluating the SF LED in the case of software errors ... 221
10.8.4 Evaluating the SF LED in the case of hardware errors ... 222
10.8.5 Status and error indicators: CPUs with DP interface ... 224
10.8.6 Status and error indicators: CPUs with PROFINET interface for the S7-300 ... 226
10.8.7 Status and error indicators: PROFINET IO Devices ... 229
10.9 Diagnostics of DP CPUs ... 230
10.9.1 Diagnostics of DP CPUs operating as DP Master ... 230
10.9.2 Reading out slave diagnostic data ... 233
10.9.3 Interrupts on the DP Master ... 238
10.9.4 Structure of the slave diagnostics when the CPU is operated as I-slave ... 239
10.10 Diagnostics of PROFINET CPUs ... 247
10.10.1 Diagnostics options of PROFINET IO ... 247
10.10.2 Maintenance ... 249
11 General technical specifications ... 251
11.1 Standards and certifications ... 251
11.2 Electromagnetic compatibility ... 255
11.3 Transportation and storage conditions for modules ... 257
11.4 Mechanical and climatic environmental conditions for S7-300 operation ... 258
11.5 Specification of dielectric tests, protection class, degree of protection, and rated voltage of S7-300 ... 260
11.6 Rated voltages of S7-300 ... 260
A Appendix ... 261
A.1 General rules and regulations for S7-300 operation ... 261
A.2 Protection against electromagnetic interference ... 263
A.2.1 Basic Points for EMC-compliant system installations ... 263
A.2.2 Five basic rules for securing EMC ... 265
A.2.2.1 1. Basic rule for ensuring EMC ... 265
A.2.2.2 2. Basic rule for ensuring EMC ... 265
A.2.2.3 3. Basic rule for ensuring EMC ... 266
A.2.2.4 4. Basic rule for ensuring EMC ... 266
A.2.2.5 5. Basic rule for ensuring EMC ... 267
A.2.3 EMC-compliant installation of automation systems ... 267
A.2.4 Examples of an EMC-compliant installation: Cabinet configuration ... 269
A.2.5 Examples of an EMC-compliant installation: Wall mounting ... 270
A.2.6 Cable shielding ... 272
A.2.7 Equipotential bonding ... 273
A.2.8 Cable routing inside buildings ... 275
A.2.9 Outdoor routing of cables ... 277

A.3 Lightning and surge voltage protection 278
A.3.1 Overview 278
A.3.2 Lightning protection zone concept 279
A.3.3 Rules for the interface between the lightning protection zones 0 and 1 281
A.3.4 Rules for the interface between the lightning protection zones 1 and 2 284
A.3.5 Rules for the interface between the lightning protection zones 2 and 3 286
A.3.6 Example: Surge protection circuit for networked S7-300 CPUs 288
A.3.7 How to protect digital output modules against overvoltages caused by inductance 290

A.4 Functional safety of electronic control equipment 292

Glossary 295

Index 323

Guide to the S7-300 documentation 1

1.1 Documentation classification

Documentation classification

The documentation listed below is part of the S7-300 documentation package.

You can also find this on the Internet and the corresponding entry ID.

Name of the documentation	Description
Manual CPU 31xC and CPU 31x: Technical specifications Entry ID: 12996906 (http://support.automation.siemens.com/WW/view/en/12996906)	Description of: • Operator controls and indicators • Communication • Memory concept • Cycle and response times • Technical specifications
Operating Instructions CPU 31xC and CPU 31x: Installation Entry ID: 13008499 (http://support.automation.siemens.com/WW/view/en/13008499)	Description of: • Configuring • Installing • Wiring • Addressing • Commissioning • Maintenance and the test functions • Diagnostics and troubleshooting
Operating Instructions CPU 31xC: Technological functions incl. CD Entry ID: 12429336 (http://support.automation.siemens.com/WW/view/en/12429336)	Description of the specific technological functions: • Positioning • Counting • Point-to-point connection • Rules The CD contains examples of the technological functions.

Name of the documentation	Description
Manual S7-300 Automation System: Module data Entry ID: 8859629 (http://support.automation.siemens.com/WW/view/en/8859629)	Descriptions and technical specifications of the following modules: • Signal modules • Power supplies • Interface modules
List Manual Instruction List of the S7-300 CPUs and ET- 200 CPUs Entry ID: 31977679 (http://support.automation.siemens.com/WW/view/en/31977679)	• List of the instruction set of the CPUs and their execution times. • List of the executable blocks (OBs/SFCs/SFBs) and their execution times.

Additional information

You also require information from the following descriptions:

Name of the documentation	Description
Getting Started S7-300 Automation System: Getting Started CPU 31x: Commissioning Entry ID: 15390497 (http://support.automation.siemens.com/WW/view/en/15390497)	Description of examples showing the various commissioning phases leading to a functional application.
Getting Started S7-300 Automation System: Getting Started CPU 31xC: Commissioning Entry ID: 48077635 (http://support.automation.siemens.com/WW/view/en/48077635)	Description of examples showing the various commissioning phases leading to a functional application.
Getting Started First steps in commissioning CPU 31xC: Positioning with analog output Entry ID: 48070939 (http://support.automation.siemens.com/WW/view/en/48070939)	Description of examples showing the various commissioning phases leading to a functional application.
Getting Started First steps in commissioning CPU 31xC: Positioning with digital output Entry ID: 48077520 (http://support.automation.siemens.com/WW/view/en/48077520)	Description of examples showing the various commissioning phases leading to a functional application.

Name of the documentation	Description
Getting Started First steps in commissioning CPU 31xC: Counting Entry ID: 48064324 (http://support.automation.siemens.com/WW/view/en/48064324)	Description of examples showing the various commissioning phases leading to a functional application.
Getting Started First steps in commissioning CPU 31xC: Point-to-point connection Entry ID: 48064280 (http://support.automation.siemens.com/WW/view/en/48064280)	Description of examples showing the various commissioning phases leading to a functional application.
Getting Started First steps in commissioning CPU 31xC: Rules Entry ID: 48077500 (http://support.automation.siemens.com/WW/view/en/48077500)	Description of examples showing the various commissioning phases leading to a functional application.
Getting Started CPU315-2 PN/DP, 317-2 PN/DP, 319-3 PN/DP: Configuring the PROFINET interface Entry ID: 48080216 (http://support.automation.siemens.com/WW/view/en/48080216)	Description of examples showing the various commissioning phases leading to a functional application.
Getting Started CPU 317-2 PN/DP: Configuring an ET 200S as PROFINET IO device Entry ID: 19290251 (http://support.automation.siemens.com/WW/view/en/19290251)	Description of examples showing the various commissioning phases leading to a functional application.
Reference Manual System and standard functions for S7-300/400, volume 1/2 Entry ID: 1214574 (http://support.automation.siemens.com/WW/view/en/1214574)	Overview of objects included in the operating systems for S7-300 and S7-400 CPUs: • OBs • SFCs • SFBs • IEC functions • Diagnostics data • System status list (SSL) • Events This manual is part of the STEP 7 reference information. You can also find the description in the STEP 7 Online Help.

Name of the documentation	Description
Manual Programming with STEP 7 Entry ID: 18652056 (http://support.automation.siemens.com/WW/view/en/18652056)	This manual provides a complete overview of programming with the STEP 7 Standard Package. This manual is part of the STEP 7 Standard Package basic information. You can also find a description in the STEP 7 Online Help.
System Manual PROFINET System Description Entry ID: 19292127 (http://support.automation.siemens.com/WW/view/en/19292127)	Basic description of PROFINET: • Network components • Data exchange and communication • PROFINET IO • Component Based Automation • Application example of PROFINET IO and Component Based Automation
Programming manual From PROFIBUS DP to PROFINET IO Entry ID: 19289930 (http://support.automation.siemens.com/WW/view/en/19289930)	Guideline for the migration from PROFIBUS DP to PROFINET I/O.
Manual SIMATIC NET: Twisted Pair and Fiber-Optic Networks Entry ID: 8763736 (http://support.automation.siemens.com/WW/view/en/8763736)	Description of: • Industrial Ethernet networks • Network configuration • Components • Guidelines for setting up networked automation systems in buildings, etc.
Configuring Manual Configure SIMATIC iMap plants Entry ID: 22762190 (http://support.automation.siemens.com/WW/view/en/22762190)	Description of the SIMATIC iMap configuration software
Configuring Manual SIMATIC iMap STEP 7 AddOn, create PROFINET components Entry ID: 22762278 (http://support.automation.siemens.com/WW/view/en/22762278)	Descriptions and instructions for creating PROFINET components with STEP 7 and for using SIMATIC devices in Component Based Automation

Name of the documentation	Description
Function Manual Isochronous mode Entry ID: 15218045 (http://support.automation.siemens.com/WW/view/en/15218045)	Description of the system property "Isochronous mode"
System Manual Communication with SIMATIC Entry ID: 1254686 (http://support.automation.siemens.com/WW/view/en/1254686)	Description of: • Basics • Services • Networks • Communication functions • Connecting PGs/OPs • Engineering and configuring in STEP 7

Service & support on the Internet

Information on the following topics can be found on the Internet (http://www.siemens.com/automation/service):

- Contacts for SIMATIC (http://www.siemens.com/automation/partner)
- Contacts for SIMATIC NET (http://www.siemens.com/simatic-net)
- Training (http://www.sitrain.com)

1.2 Guide to the S7-300 documentation

Overview

The following tables contain a guide through the S7-300 documentation.

Ambient influence on the automation system

Information about ...	is available in the manual ...	In Section ...
What provisions do I have to make for automation system installation space?	• CPU 31xC and CPU 31x: Installation	Configuring – Component dimensions Mounting – Installing the mounting rail
How do environmental conditions influence the automation system?	• CPU 31xC and CPU 31x: Installation	Appendix

Isolation

Information about ...	is available in the manual ...	In Section ...
Which modules can I use if electrical isolation is required between sensors/actuators?	• CPU 31xC and CPU 31x: Installation • Module data	Configuring – Electrical assembly, protective measures and grounding
Under what conditions do I have to isolate the modules electrically? How do I wire that?	• CPU 31xC and CPU 31x: Installation	Configuring – Electrical assembly, protective measures and grounding Wiring
Under which conditions do I have to isolate stations electrically? How do I wire that?	• CPU 31xC and CPU 31x: Installation	Configuring – Configuring subnets

Communication between sensors/actuators and the PLC

Information about ...	is available in the manual ...	In Section ...
Which module is suitable for my sensor/actuator?	• CPU 31xC and CPU 31x: Technical specifications • For your signal module	Technical specifications
How many sensors/actuators can I connect to the module?	• CPU 31xC and CPU 31x: Technical specifications • For your signal module	Technical specifications
How do I connect my sensors/actuators to the automation system, using the front connector?	• CPU 31xC and CPU 31x: Installation	Wiring – Wiring the front connector

Information about ...	is available in the manual ...	In Section ...
When do I need expansion modules (EM) and how do I connect them?	• CPU 31xC and CPU 31x: Installation	Configuring – Distribution of modules across multiple racks
How do I mount modules on racks / mounting rails?	• CPU 31xC and CPU 31x: Installation	Assembly – Installing modules on the mounting rail

The use of local and distributed IOs

Information about ...	is available in the manual ...	In Section ...
Which range of modules do I want to use?	• Module data (for centralized IOs/ expansion devices) • of the respective peripheral (for distributed IOs/ PROFIBUS DP)	–

Configuration consisting of the central controller and expansion units

Information about ...	is available in the manual ...	In Section ...
Which rack / mounting rail is most suitable for my application?	• CPU 31xC and CPU 31x: Installation	Configuring
Which interface modules (IM) do I need to connect the expansion units to the central controller?	• CPU 31xC and CPU 31x: Installation	Configuring – Distribution of modules across multiple racks
What is the right power supply (PS) for my application?	• CPU 31xC and CPU 31x: Installation	Configuring

CPU performance

Information about ...	is available in the manual ...	In Section ...
Which memory concept is best suited to my application?	• CPU 31xC and CPU 31x: Technical specifications	Memory concept
How do I insert and remove Micro Memory Cards?	• CPU 31xC and CPU 31x: Installation	Commissioning – Commissioning modules – Removing / inserting a Micro Memory Card (MMC)
Which CPU meets my demands on performance?	• S7-300 instruction list: CPU 31xC and CPU 31x	–
Length of the CPU response / execution times	• CPU 31xC and CPU 31x: Technical specifications	–
Which technological functions are implemented?	• Technological functions	–
How can I use these technological functions?	• Technological functions	–

Communication

Information about ...	is available in the manual ...	In Section ...
Which principles do I have to take into account?	• CPU 31xC and CPU 31x: Technical specifications • Communication with SIMATIC • PROFINET System Description	Communication
Options and resources of the CPU	• CPU 31xC and CPU 31x: Technical specifications	Technical specifications
How to use communication processors (CPs) to optimize communication	• CP Manual	–
Which type of communication network is best suited to my application?	• CPU 31xC and CPU 31x: Installation	Configuring – Configuring subnets
How do I network the various components?	• CPU 31xC and CPU 31x: Installation	Configuring – Configuring subnets
What to take into account when configuring PROFINET networks	• SIMATC NET, twisted-pair and fiber-optic networks (6GK1970-1BA10-0AA0)	Network configuration
	• PROFINET System Description	Installation and commissioning

Software

Information about ...	is available in the manual ...	In Section ...
Software requirements of my S7-300 system	• CPU 31xC and CPU 31x: Technical specifications	Technical specifications

Supplementary features

Information about ...	is available in ...
How can I implement operation and monitoring functions? (Human Machine Interface)	The relevant manual: • For text-based displays • For Operator Panels • For WinCC
How to integrate process control modules	• Respective PCS7 manual
What options are offered by redundant and fail-safe systems?	• S7-400H – Fault-Tolerant Systems • Failsafe systems
Information to be observed when migrating from PROFIBUS DP to PROFINET IO	• From PROFIBUS DP to PROFINET IO

Installation Sequence

2

We will start by showing you the sequence of steps you have to follow to install your system. Then we will go on to explain the basic rules that you should follow, and how you can modify an existing system.

Installation procedure

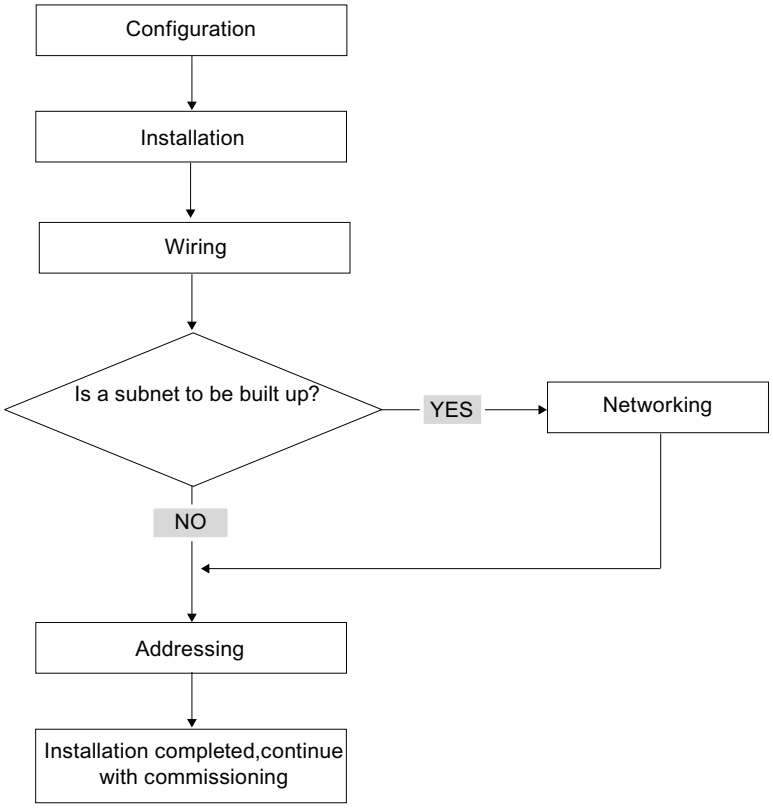

Basic rules for trouble-free operation of the S7 system

In view of the many and versatile applications, we can only provide basic rules for the electrical and mechanical installation in this section.

You have to at least keep to these basic rules in order to obtain a fully functional SIMATIC-S7 system.

Modifying the existing S7 system structure

To modify the configuration of an existing system, proceed as described earlier.

Note

When adding a new signal module, always refer to the relevant module information.

Reference

Also refer to the description of the various modules in the manual: *SIMATIC S7-300 Automation Systems, Module Data Manual*.

S7-300 components

3

3.1 Example of an S7-300 configuration

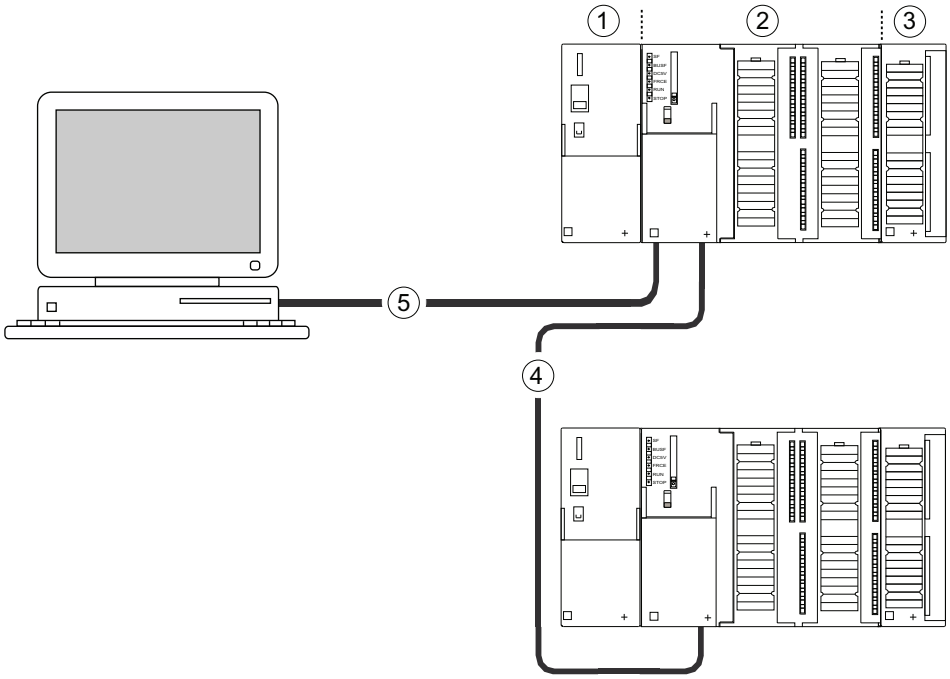

Number	Description
①	Power supply (PS) module
②	Central processing unit (CPU); the example in the diagram shows a CPU 31xC with integrated I/O.
③	Signal module (SM)
④	PROFIBUS bus cable
⑤	Cable for connecting a programming device (PG)

You use a programming device (PG) to program the S7300 PLC. Use the PG cable to interconnect the PG with the CPU.

To commission or program a CPU with PROFINET connection, you also have the choice to connect the programming device to the PROFINET port of the CPU via Ethernet cable.

Several S7-300 CPUs communicate with one another and with other SIMATIC S7 PLCs via the PROFIBUS cable. Several S7-300 are connected via the PROFIBUS bus cable.

3.2 Overview of the most important S7-300 modules

You can choose from a number of modules for installing and commissioning the S7-300. The most important modules and their functions are shown below.

Table 3- 1 S7-300 components:

Component	Function	Illustration
Mounting rail Accessories: • Shield connection element	S7-300 racks	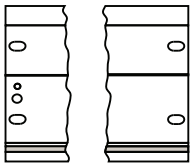
Power supply (PS) module	The PS converts the line voltage (120/230 VAC) into a 24 VDC operating voltage, and supplies the S7-300 and its 24 VDC load circuits.	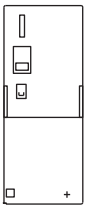
CPU Accessories: • Front connectors (CPU 31xC only)	The CPU executes the user program, supplies 5 V to the S7-300 backplane bus, and communicates with other nodes of an MPI network via the MPI interface. Additional features of specific CPUs: • DP master or DP slave on a PROFIBUS subnet • Technological functions • Point-to-point connection • Ethernet communication via integrated PROFINET interface	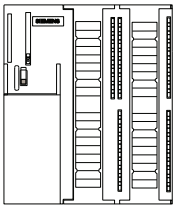 A CPU 31xC, for example
		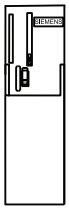 A CPU 312, 314, or 315-2 DP, for example
		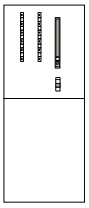 A CPU 317, for example

Component	Function	Illustration
Signal modules (SM) • Digital input modules • Digital output modules • Digital input/output module • Analog input modules • Analog output modules • Analog I/O modules Accessories: • Front connectors	The SM matches different process signal levels to the S7-300.	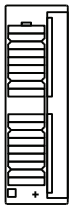
Function modules (FM) Accessories: • Front connectors	The FM performs time-critical and memory-intensive process signal processing tasks. Positioning or controlling, for example	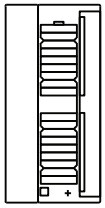
Communication processor (CP) Accessories: Connecting cable	The CP relieves the CPU of communication tasks. Example: CP 342-5 DP for connecting to PROFIBUS DP	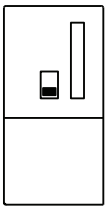
SIMATIC TOP connect Accessories: • Front connector module with ribbon cable terminals	Wiring of digital modules	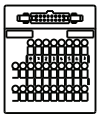
Interface module (IM) Accessories: • Connecting cable	The IM connects the various rows in an S7-300 with one another.	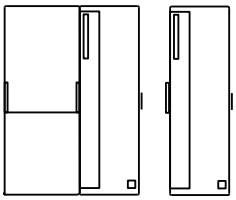
PROFIBUS bus cable with bus connector	Connects the nodes of an MPI or PROFIBUS subnet with one another.	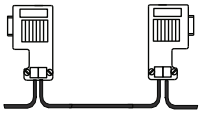
PG cable	Connects a PG/PC to a CPU	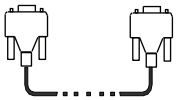
RS 485 repeater RS 485 Diagnostic Repeater	The repeater is used to amplify the signals and to couple segments of an MPI or PROFIBUS subnet.	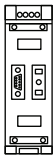

Component	Function	Illustration
Switch	A switch is used to interconnect the Ethernet nodes.	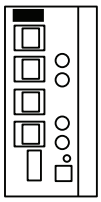
Twisted-pair cables with RJ45 connectors.	Interconnects devices with Ethernet interface (a switch with a CPU 317-2 PN/DP, for example)	
Programming device (PG) or PC with the STEP 7 software package	You need a PG to configure, set parameters for, program and test your S7-300.	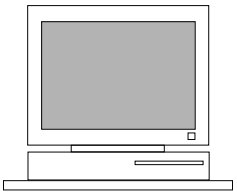

Configuring 4

4.1 Overview

There, you can find all the necessary information

- for the mechanical configuration of an S7-300,
- for the electrical configuration of an S7-300,
- that has to be observed in networking.

Reference

For more detailed information, refer to

- the *Communication with SIMATIC* manual or
- the *SIMATIC NET twisted pair and fiber optic networks* manual (6GK1970-1BA10-0AA0)

4.2 Basic configuration principles

Important information for engineering

WARNING

Open equipment
S7-300 modules are open equipment. That is, the S7-300 must be installed in a cubicle, cabinet or electrical control room which can only be accessed using a key or tool. Only trained or authorized personnel are allowed access to such cubicles, cabinets or electrical operating rooms.

CAUTION

Operation of an S7-300 in plants or systems is defined by special set of rules and regulations, based on the relevant field of application. Observe the safety and accident prevention regulations for specific applications, for example, the machine protection directives. This chapter and the appendix *General rules and regulations on S7-300 operation* provide an overview of the most important rules you need to observe when integrating an S7-300 into a plant or a system.

Central unit (CU) and expansion module (EM)

An S7-300 PLC consists of a central unit (CU) and of one or multiple expansion modules.

The rack containing the CPU is the central unit (CU). Racks equipped with modules and connected to the CU form the expansion modules (EMs) of the system.

Use of an expansion module (EM)

You can use EMs if the CU runs out of slots for your application.

When using EMs, you might require additional power supply modules in addition to the extra racks and interface modules (IM). When using interface modules you must ensure compatibility of the partner stations.

Racks

The rack for your S7-300 is a mounting rail. You can use this rail to mount all modules of your S7-300 system.

Horizontal and vertical installation

You can mount an S7-300 either vertically or horizontally. The following ambient air temperatures are permitted:

- Vertical assembly: 0 °C to 40 °C
- Horizontal assembly: 0 °C to 60 °C

Always install the CPU and power supply modules on the left or at the bottom.

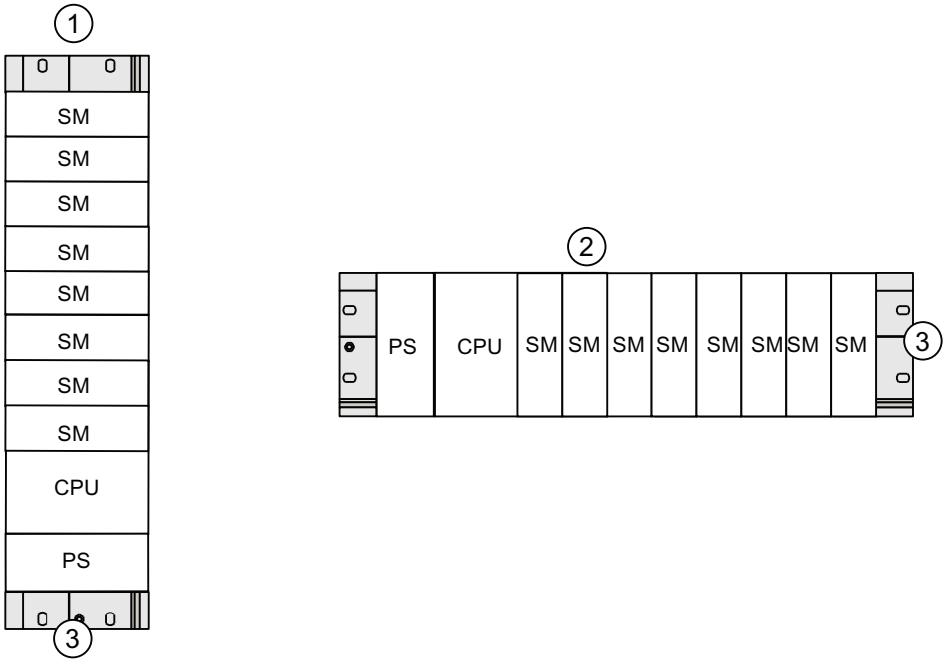

Number	Description
①	Vertical structure of the S7-300
②	Horizontal structure of the S7-300
③	Mounting rail

4.3 Component dimensions

Length of the mounting rails

Table 4- 1 Mounting rails - Overview

Mounting rail length	Usable length for modules	Order number
160 mm	120 mm	6ES7390-1AB60-0AA0
482.6 mm	450 mm	6ES7390-1AE80-0AA0
530 mm	480 mm	6ES7390-1AF30-0AA0
830 mm	780 mm	6ES7390-1AJ30-0AA0
2000 mm	cut to length as required	6ES7390-1BC00-0AA0

In contrast to other rails, the 2 m mounting rail is not equipped with any fixing holes. These must be drilled, allowing optimal adaptation of the 2 m rail to your application.

Installation Dimensions of the Modules

Table 4- 2 Module width

Module	Width
Power supply module PS 307, 2 A	40 mm
Power supply module PS 307, 5 A	60 mm
Power supply module PS 307, 10 A	80 mm
CPU	For information on assembly dimensions, refer to the technical data in *CPU 31xC and CPU 31x manual, technical data*.
Analog input/output modules	40 mm
Digital input/output modules	40 mm
Simulator module SM 374	40 mm
Interface modules IM 360 and IM 365	40 mm
Interface module IM 361	80 mm

- Module height: 125 mm
- Module height with shield connection element 185 mm
- Maximum assembly depth: 130 mm
- Maximum assembly depth of a CPU with an inserted DP connector with angled cable feed: 140 mm
- Maximum assembly depth with open front panel (CPU): 180 mm

Dimensions of other modules such as CPs, FMs etc. are found in the relevant manuals.

Shield connection element

The shield connection element provides you with a comfortable means of bonding all shielded cables of your S7 modules to ground, that is, via direct connection of the shield connection element with the mounting rail.

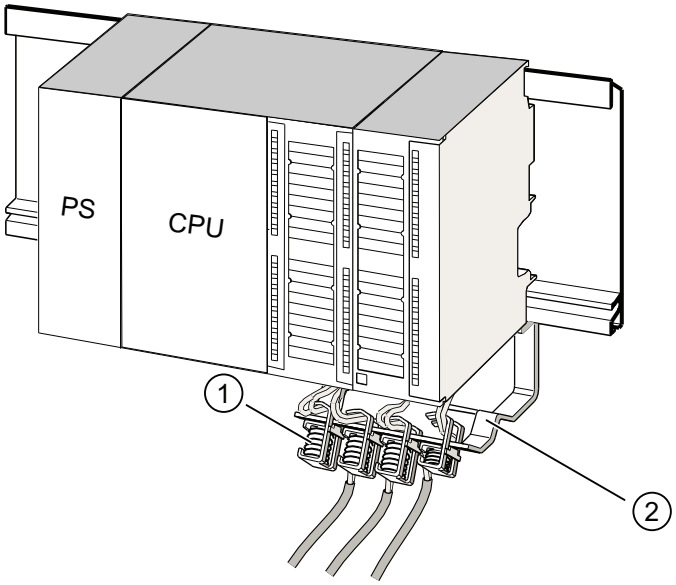

Number	Description
①	Shielding terminals
②	Bracket

Mount the bracket (order number 6ES7390-5AA0-0AA0) to the rail using the two screw bolts. If you use a shield connection element, the dimension specifications apply from the lower edge of the shield connection element.

- Width of the shield connection element: 80 mm
- Number of shielding terminals you can install per shield connection element: max. 4

Table 4- 3 Shielding terminals - Overview

Cable with shielding diameter	Shielding terminal order number
Cable with 2 mm to 6 mm shielding diameter	6ES7390-5AB00–0AA0
Cable with 3 mm to 8 mm shielding diameter	6ES7390-5BA00–0AA0
Cable with 4 mm to 13 mm shielding diameter	6ES7390-5CA00–0AA0

4.4 Specified clearances

You must maintain the clearance shown in the figure in order to provide sufficient space for installing the modules, and to allow the dissipation of heat generated by the modules.

The S7-300 assembly on multiple racks shown in the figure below shows the clearance between racks and adjacent components, cable ducts, cabinet walls etc.

For example, when routing your module wiring through cable duct, the minimum clearance between the bottom edge of the shield connection element and the cable duct is 40 mm.

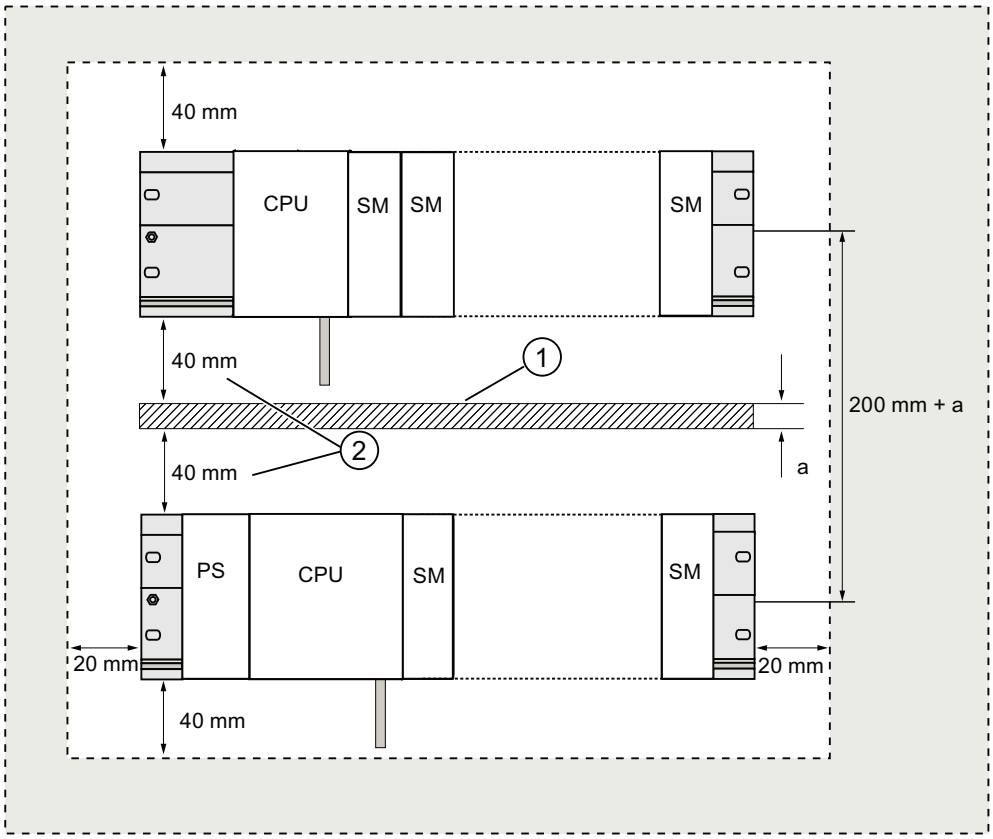

Number	Description
①	Wiring with cable duct
②	Minimum clearance between the cable duct and the bottom edge of the shield connection element is 40 mm.

4.5 Arrangement of modules on a single rack

Reasons for using one or multiple racks

The number of racks you need will depend on your application.

Reasons for using a single rack	Reasons for distributing modules between several racks
• Compact, space-saving use of all your modules • Local use of all modules • Fewer signals to be processed	• More signals to be processed • Insufficient number of slots

Note

If you opt for the installation on a single rack, insert a dummy module to the right of the CPU (order no.: 6ES7370-0AA01-0AA0). This gives you the option of adding a second rack for your application if this is necessary later, simply by replacing the dummy module with an interface module, without having to reinstall and rewire the first rack.

Rules: Layout of modules on a single module rack

The following rules apply to module installations on a single rack:

- No more than eight modules (SM, FM, CP) may be installed to the right of the CPU.
- The accumulated power consumption of modules mounted on a rack may not exceed 1.2 A on the S7-300 backplane bus.

Reference

Additional information is available in the technical data, for example, in the SIMATIC S7-300 Automation Systems Manual, Module data, or in the *S7-300 Manual, CPU 31xC and CPU 31x, Technical Data*.

Example

The figure below shows a layout with eight signal modules in an S7-300 assembly.

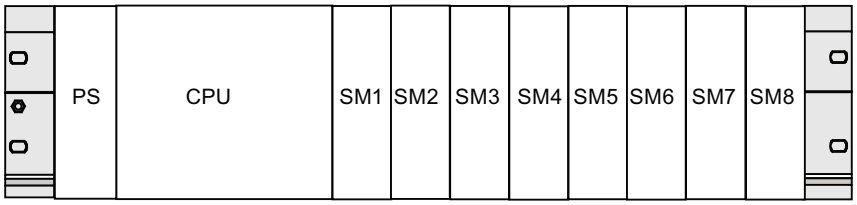

4.6 Distribution of modules to several racks

Exceptions

With CPU 312 and CPU 312C, only a single-row configuration on a rack is possible.

Using interface modules

If you are planning an assembly in multiple racks, then you will need interface modules (IM). An interface module routes the backplane bus of an S7-300 to the next rack.

The CPU is always located on rack 0.

Table 4- 4 Interface modules - Overview

Properties	Two or more rows	Cost-effective 2-row configuration
Send IM in rack 0	IM 360 order no.: 6ES7360-3AA01-0AA0	IM 365 order no.: 6ES7365-0AB01-0AA0
Receiver IM in racks 1 to 3	IM 361 order no.: 6ES7361-3CA01-0AA0	IM 365 (hard-wired to send IM 365)
Maximum number of expansion modules	3	1
Length of connecting cables	1 m (6ES7368-3BB01-0AA0) 2.5 m (6ES7368-3BC51-0AA0) 5 m (6ES7368-3BF01-0AA0) 10 m (6ES7368-3CB01-0AA0)	1 m (hard-wired)
Comments	-	Rack 1 can only receive signal modules; the accumulated current load is limited to 1.2 A, whereby the maximum for rack 1 is 0.8 A. These restrictions do not apply to operation with interface modules IM 360/IM 361

Rules: Distribution of modules to several racks

Please note the following points if you wish to arrange your modules on multiple racks:

- The interface module always uses slot 3
  (slot 1: power supply module; slot 2: CPU, slot 3: Interface module)
- It is always on the left before the first signal module.
- No more than 8 modules (SM, FM, CP) are permitted per rack.
- The number of modules (SM, FM, CP) is limited by the permitted current consumption on the S7-300 backplane bus. The cumulative current consumption of 1.2 A in row 0 (CPU) and 0.8 A each in the expansion rows 1 to 3 must not be exceeded.

Note

The current consumption of specific modules is listed in the *SIMATIC S7-300 Automation Systems Manual, Module data.*

Rules: Interference-proof interfacing

Special shielding and grounding measures are not required if you interconnect the CU and EM using suitable interface modules (Send IM and Receive IM).

However, you must ensure

- a low impedance interconnection of all racks,
- that the racks of a grounded assembly are grounded in a star pattern,
- that the contact springs on the racks are clean and not bent, thus ensuring that interference currents are properly discharged to ground.

Example: Full assembly using four racks

The figure shows the arrangement of modules in an S7-300 assembly on 4 racks.

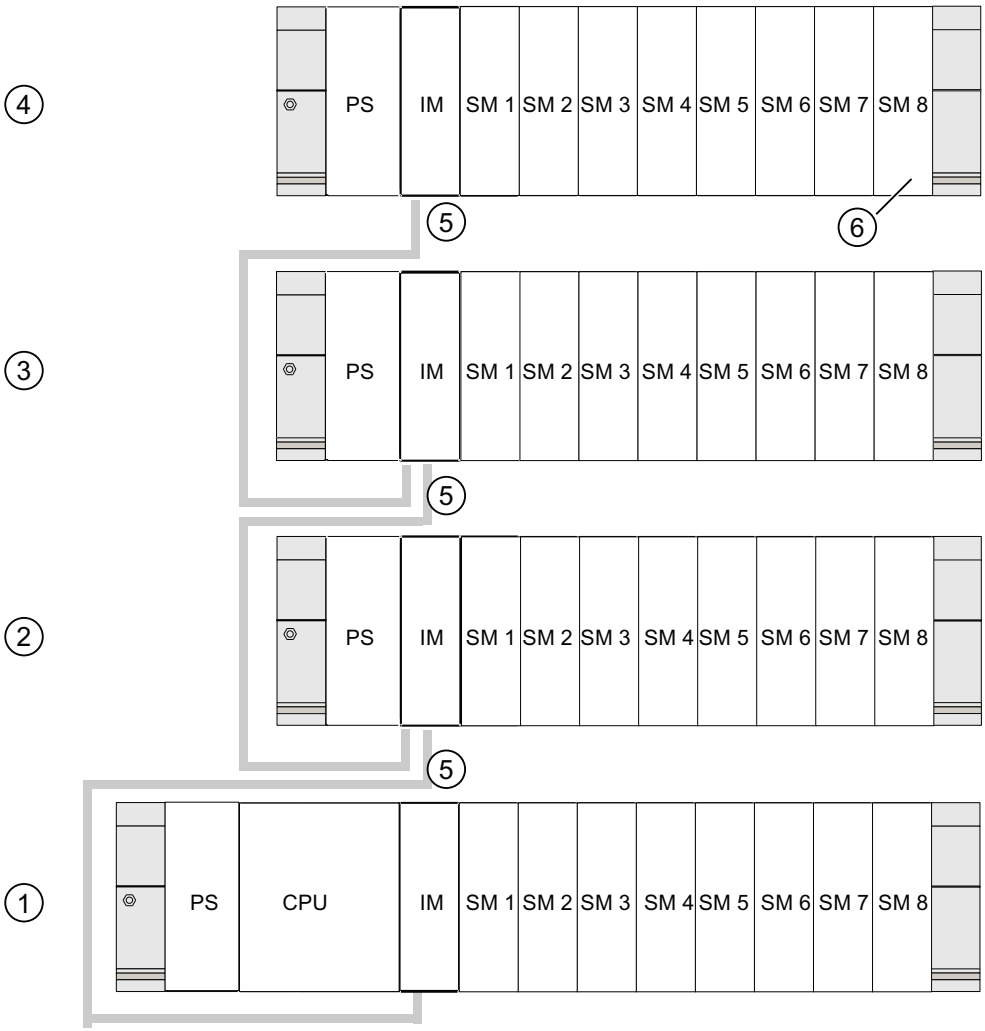

Number	Description
①	Rack 0 (central unit)
②	Rack 1 (expansion module)
③	Rack 2 (expansion module)
④	Rack 3 (expansion module)
⑤	Connection line 368
⑥	Limitation for CPU 31xC When this CPU is used, do not insert signal module 8 into Rack 4.

4.7 Selection and installation of cabinets

Reasons for installing an S7-300 in a cabinet

Your S7-300 should be installed in a cabinet,

- if you plan a larger system,
- if you are using your S7-300 systems in an environment subject to interference or contamination, and
- to meet UL/CSA requirements for cabinet installation.

Selecting and dimensioning cabinets

Take the following criteria into account:

- ambient conditions at the cabinet's place of installation
- the specified mounting clearance for racks (mounting rails)
- accumulated power loss of all components in the cabinet.

The ambient conditions (temperature, humidity, dust, chemical influence, explosion hazard) at the cabinet's place of installation determine the degree of protection (IP xx) required for the cabinet.

Reference for degrees of protection

For additional information on the degrees of protection, refer to IEC 60529 and DIN 40050.

The power dissipation capability of cabinets

The power dissipation capability of a cabinet depends on its type, ambient temperature and on the internal arrangement of devices.

Reference for power loss

For detailed information on dissipatable power loss, refer to the Siemens catalogs. You can find these at: https://mall.automation.siemens.com/de/guest/guiRegionSelector.asp (https://mall.automation.siemens.com/de/guest/guiRegionSelector.asp)

Specification of cabinet dimensions

Note the following specifications when you determine the dimensions of a cabinet for your S7-300 installation:

- Space required for racks (mounting rails)
- Minimum clearance between the racks and cabinet walls
- Minimum clearance between the racks
- Space required for cable ducts or fan assemblies
- Position of the stays

⚠ WARNING
Modules may get damaged if exposed to excess ambient temperatures.

Reference for ambient temperatures

For information on permitted ambient temperatures, refer to the *S7-300 Automation System, Module Data* Manual.

Overview of typical cabinet types

The table below gives you an overview of commonly used cabinet types. It shows you the applied principle of heat dissipation, the calculated maximum power loss and the degree of protection.

Table 4- 5 Cabinet types

Open cabinets		Closed cabinets		
Through-ventilation by natural convection	Increased through-ventilation	Natural convection	Forced convection with rack fan, improvement of natural convection	Forced convection with heat exchanger, internal and external auxiliary ventilation
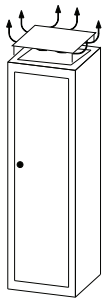	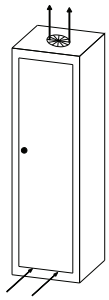	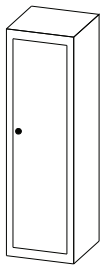	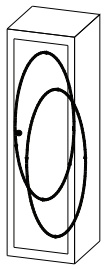	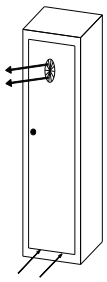

Open cabinets		Closed cabinets		
Mainly inherent heat dissipation, with a small portion across the cabinet wall.	Higher heat dissipation with increased air movement.	Heat dissipation only across the cabinet wall; only low power losses permitted. In most cases, the heat accumulates at the top of the cabinet interior.	Heat dissipation only across the cabinet wall. Forced convection of the interior air improves heat dissipation and prevents heat accumulation.	Heat dissipation by heat exchange between heated internal air and cool external air. The increased surface of the pleated profile of the heat exchanger wall and forced convection of internal and external air provide good heat dissipation.
Degree of protection IP 20	Degree of protection IP 20	Degree of protection IP 54	Degree of protection IP 54	Degree of protection IP 54
Typical power dissipation under following marginal conditions: • Cabinet size: 600 mm x 600 mm x 2,200 mm • Difference between the outer and inner temperature of the cabinet is 20 °C (for other temperature differences refer to the temperature charts of the cabinet manufacturer)				
up to 700 W	up to 2,700 W (with fine filter up to 1,400 W)	up to 260 W	up to 360 W	up to 1,700 W

4.8 Example: Selecting a cabinet

Introduction

The sample below clearly shows the maximum permitted ambient temperature at a specific power loss for different cabinet designs.

Installation

The following device configuration should be installed in a cabinet:

- Central unit, 150 W
- Expansion modules, each with 150 W
- Load power supply under full load, 200 W

This results in an accumulated power loss of 650 W.

Power loss dissipated

The diagram in the figure below shows guide values for the permitted ambient temperature of a cabinet with the dimensions 600 mm x 600 mm x 2000 mm, based on the accumulated power loss. These values only apply if you maintain the specified assembly and clearance dimensions for racks (rails).

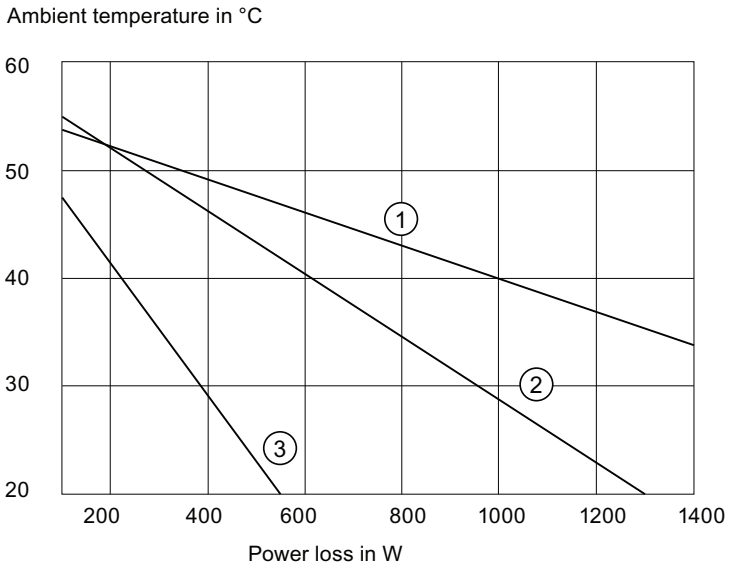

Number	Description
①	Closed cabinet with heat exchanger (heat exchanger size 11/6 (920 x 460 x 111 mm))
②	Cabinet with through-ventilation by natural convection
③	Closed cabinet with natural convection and forced convection by equipment fans

Result

The figure below shows the resultant ambient temperatures, based on an accumulated power loss of 650 W:

Table 4- 6 Cabinet selection

Cabinet design	Maximum permitted ambient temperature
Closed with natural convection and forced convection (trend 3)	Operation not possible
Open with through-ventilation (trend 2)	approx. 38 °C
Closed with heat exchanger (trend 1)	approx. 45 °C

Cabinet types suitable for horizontal installation of the S7-300:

- open, with closed ventilation
- closed, with heat exchanger

4.9 Electrical assembly, protective measures and grounding

4.9.1 Grounding concept and overall structure

This section contains information about the overall configuration of an S7-300 connected to a grounded TN-S network:

- Circuit-breaking devices, short-circuit and overload protection to VDE 0100 and VDE 0113
- Load power supplies and load circuits
- Grounding concept

Note

An S7-300 can be used in many different ways, so we can only describe the basic rules for the electrical installation in this document. Those basic rules are a must in order to achieve a fully functional S7-300 system.

Definition: Grounded mains

In a grounded mains network, the neutral conductor is always bonded to ground. A short-circuit to ground of a live conductor, or of a grounded part of the system, trips the protective devices.

Specified components and protective measures

A number of components and protective measures are prescribed for plant installations. The type of components and the degree of compulsion pertaining to the protective measures will depend on the VDE specification applicable to your particular plant.

The table below shows components and protective measures.

Table 4- 7 VDE specifications for the installation of a PLC system

Compare ...	1)	VDE 0100	VDE 0113
Disconnect devices for control systems, signal generators and final control elements	(1)	... Part 460: Master switch	... Part 1: Load disconnect switch
Short-circuit / overload protection: In groups for signal generators and final control elements	(2)	... Part 725: Single-pole fusing of circuits	... Part 1: • With grounded secondary power circuit: single-pole fusing • Otherwise: fusing of all poles
Load power supply for AC load circuits with more than five electromagnetic devices	(3)	Galvanic isolation by transformer recommended	Galvanic isolation by transformer mandatory

1) This column refers to the numbers in the figure in the chapter "Overview: Grounding".

Reference

For additional information on protective measures, refer to the Appendix.

See also

Overview: Grounding (Page 52)

4.9.2 Installing an S7-300 with grounded reference potential

Introduction

When the S7-300 is configured with a grounded reference potential, any interference currents are discharged to the grounding conductor / ground. A grounding slide contact is used for this except with CPU 31xC.

Note

Your CPU is supplied with grounded reference potential. Therefore, if you wish to install an S7-300 with grounded reference potential, you do not need to modify your CPU!

Grounded reference potential of the CPU 31x

The figure shows an S7-300 configuration with grounded reference potential (factory state.)

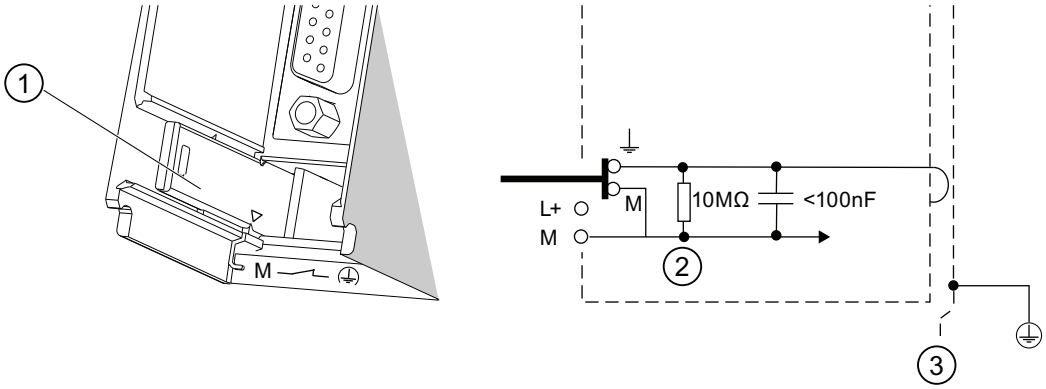

Number	Description
①	Grounding slide contact in grounded state
②	Ground potential of the internal CPU circuitry
③	Mounting rail

Note

Do not pull out the grounding slide contact when you install an S7-300 with grounded reference potential.

4.9.3 Installing an S7-300 with ungrounded reference potential (not CPU 31xC)

Introduction

When the S7-300 is configured with an ungrounded reference potential, interference currents are discharged to the ground conductor / to ground via an RC combination integrated in the CPU.

Note

An S7-300 with a CPU 31xC cannot be configured ungrounded.

Application

In large systems, the S7-300 may require a configuration with grounded reference potential due to ground-fault monitoring. This is the case, for example, in chemical industry and power stations.

Ungrounded reference potential of the CPU 31x

The figure demonstrates how to achieve a reference potential without grounding in an S7-300 installation.

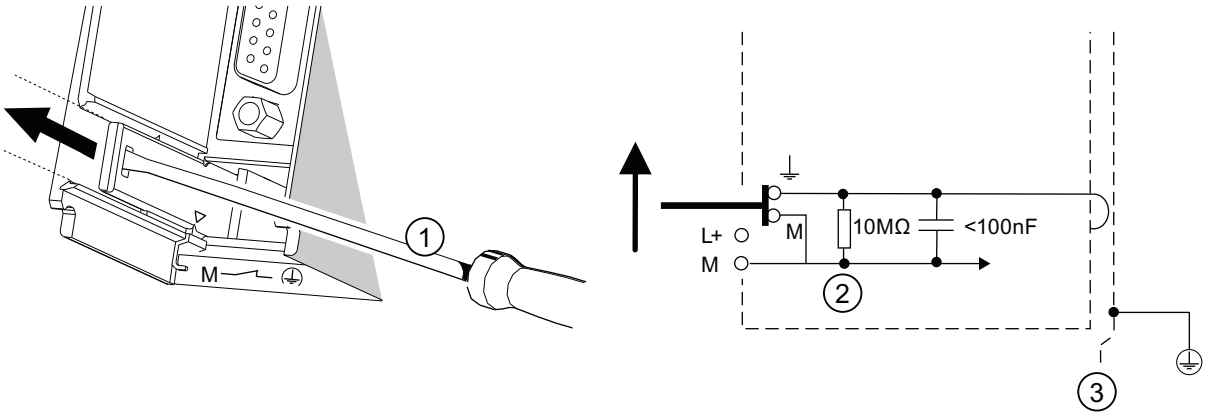

Number	Description
①	Creating an ungrounded reference potential in your CPU Use a screwdriver with 3.5 mm blade width to push the grounding slide contact forwards in the direction of the arrow until it snaps into place.
②	Ground potential of the internal CPU circuitry
③	Mounting rail

Note

You should set up the ungrounded reference potential before you mount the device on the rail. If you have already installed and wired up the CPU, you may have to disconnect the MPI interface before you pull out the grounding slide contact.

4.9.4 Isolated or non-isolated modules?

Isolated modules

Isolated modules are installed with galvanic isolation between the reference potentials of the control circuit ($M_{internal}$) and load circuit ($M_{external}$).

Field of application

Use isolated modules for:

- All AC load circuits
- DC load circuits with separate reference potential

  Examples:

  – DC load circuits containing sensors which are connected to different reference potentials (for example, if grounded sensors are located at a considerable distance from the control system and equipotential bonding is not possible).

  – DC load circuits with grounded positive pole (L+) (battery circuits).

Isolated modules and grounding concept

You can always use isolated modules, irrespective of the grounding state of the control system's reference potential.

Example: Assembly with CPU 31xC and isolated modules

The figure below shows an example of such a configuration: A CPU 31xC with isolated modules. The CPU 31xC (1) is automatically grounded.

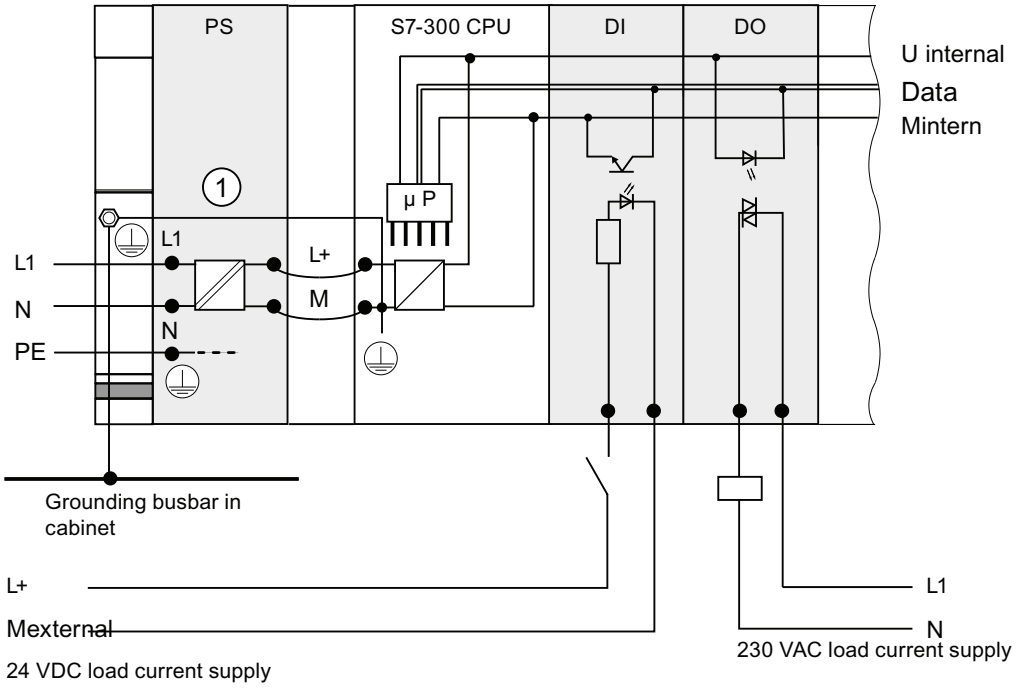

Common potential modules

In a configuration containing modules with common potential, the reference potentials of the control circuit ($M_{internal}$) and analog circuit (M_{analog}) are not galvanically isolated.

Example: Installing an S7-300 with common potential modules

When using an SM 334 AI 4/AO 2 analog input/output module, connect one of the grounding terminals M_{analog} to the CPU chassis ground.

The figure below shows an example of such a configuration: An S7-300 with common potential modules

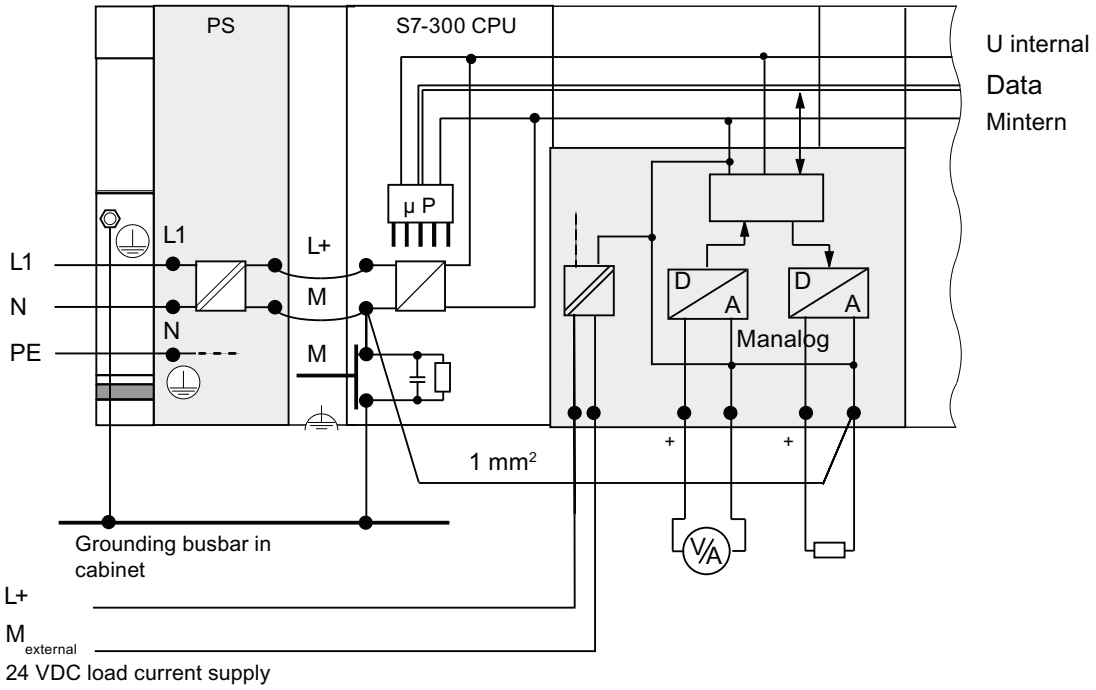

4.9.5 Grounding measures

Bonding to ground

Low-impedance connections to ground reduce the risk of electric shock as a result of a short-circuit or system fault. Low-impedance connections (large surface, large-surface contact) reduce the effects of interference on the system or the emission of interference signals. An effective shielding of cables and devices is also a significant contribution.

⚠ WARNING

All protection class 1 devices, and all larger metal parts, must be bonded to protective ground. That is the only way to safely protect operators from electrical shock. This also discharges any interference transmitted from external power supply cables, signal cables or cables to the I/O devices.

Measures for protective grounding

The table below shows an overview of the most important measures for protective grounding.

Table 4- 8 Measures for protective grounding

Device	Measures
Cabinet / mounting frame	Connection to a central grounding point (grounding busbar, for example) using cables with protective conductor quality.
Rack/ mounting rail	Connection to a central grounding point via cable with minimum cross-section of 10 mm^2 if the mounting rails are not installed in the cabinet and not interconnected with larger metal parts.
Module	None
I/O Device	Grounding via grounding-type plug
Sensors and final control elements	Grounding in accordance with regulations applying to the system

Rule: Connect the cable shielding to ground

You should always connect both ends of the cable shielding to ground / system ground. This is the only way to achieve an effective interference suppression in the higher frequency range.

Attenuation is restricted to the lower frequency range if you connect only one end of the shielding (that is, at the start or end of the cable) to ground. One-sided shielding connections could be more favorable in situations

- not allowing the installation of an equipotential bonding conductor,
- where analog signals (some mA or µA) are transferred,
- or if foil shielding is used (static shielding).

Note

Whenever potential differences develop between two grounding points, an equalizing current can develop on a shielding that is connected on both ends. Compensate for this situation by installing an additional equipotential cable.

⚠ CAUTION

Always avoid the flow of operating current to ground.

Rule: Grounding the load circuits

You should always ground the load circuits. This common reference potential (ground) ensures proper functioning.

Note

(not valid for CPU 31xC)

If you want to locate a ground fault, provide your load power supply (terminal L- or M) or the isolating transformer with a removable connection to the protective conductor (see *Overview: Grounding* Number 4).

Connecting the load voltage reference potential

A complex system containing many output modules requires an additional load voltage for switching the final control elements.

The table below shows how to connect the load voltage reference potential $M_{external}$ for the various configurations.

Table 4- 9 Connecting the load voltage reference potential

Installation	common potential modules	isolated modules	Comment
grounded	Connect $M_{external}$ with M on the CPU	Connect or do not connect $M_{external}$ to the grounding busbar	-
ungrounded	Connect $M_{external}$ with M on the CPU	Connect or do not connect $M_{external}$ to the grounding busbar	Ungrounded installation with CPU 31xC is not possible

4.9.6 Overview: Grounding

CPU 31xC

The figure below shows you the complete assembly of an S7-300 with CPU 31xC with a power supply from TN-S mains. The PS 307 supplies the CPU and the load current circuit of the 24 VDC modules. Remark: The layout of the power connections does not correspond with their physical arrangement; it was merely selected to give you a clear overview.

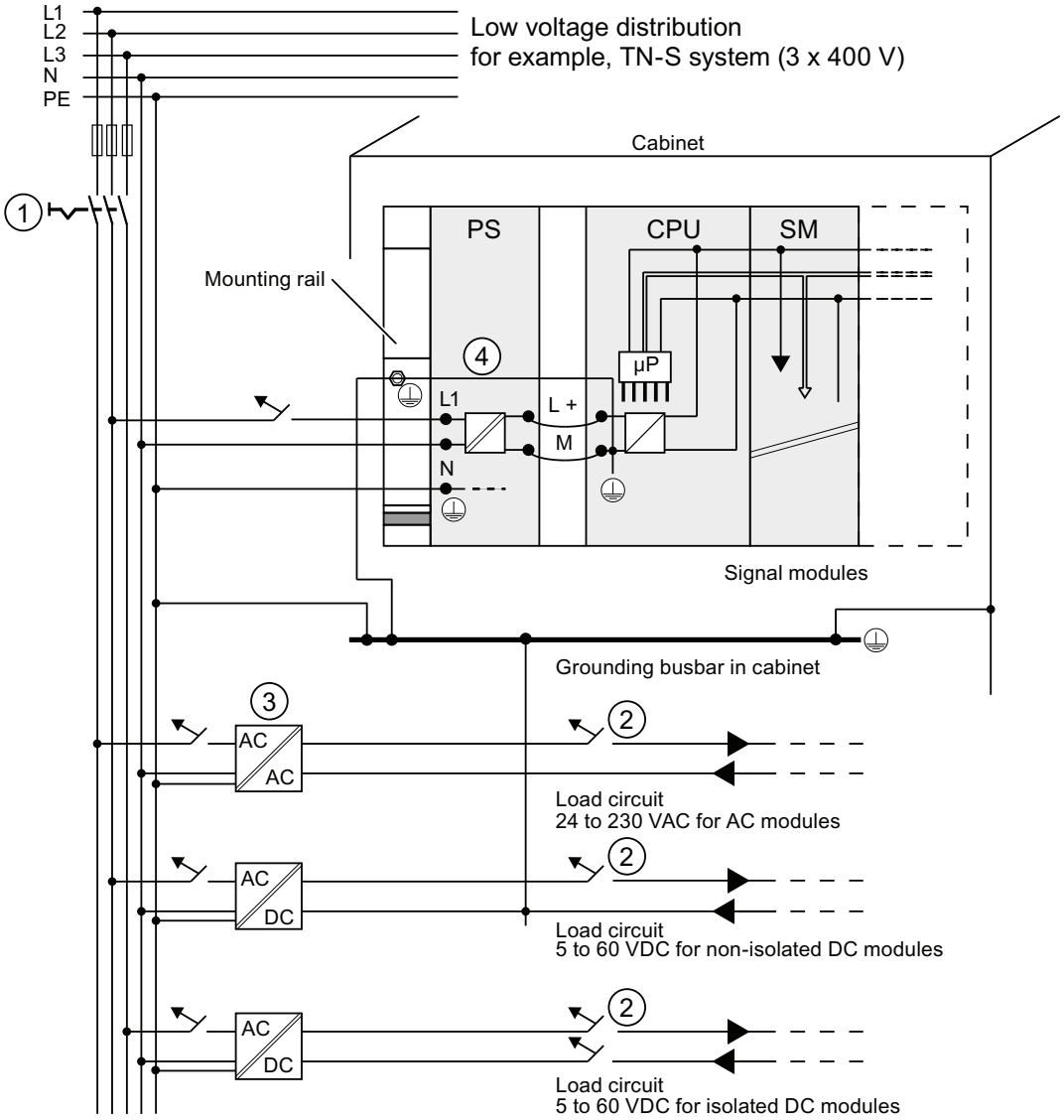

Number	Description
①	Master switch
②	Short-circuit and overload protection
③	Load current supply (galvanic isolation)
④	This connection is made automatically for the CPU 31xC.

Figure 4-1 Connecting the load voltage reference potential

All CPUs except CPU 31xC

The figure below shows you the complete assembly of an S7-300 with TN-S mains supply (does not apply to CPU 31xC). The PS 307 supplies the CPU and the load current circuit of the 24 VDC modules.

Remark: The layout of the power connections does not correspond with their physical arrangement; it was merely selected to give you a clear overview.

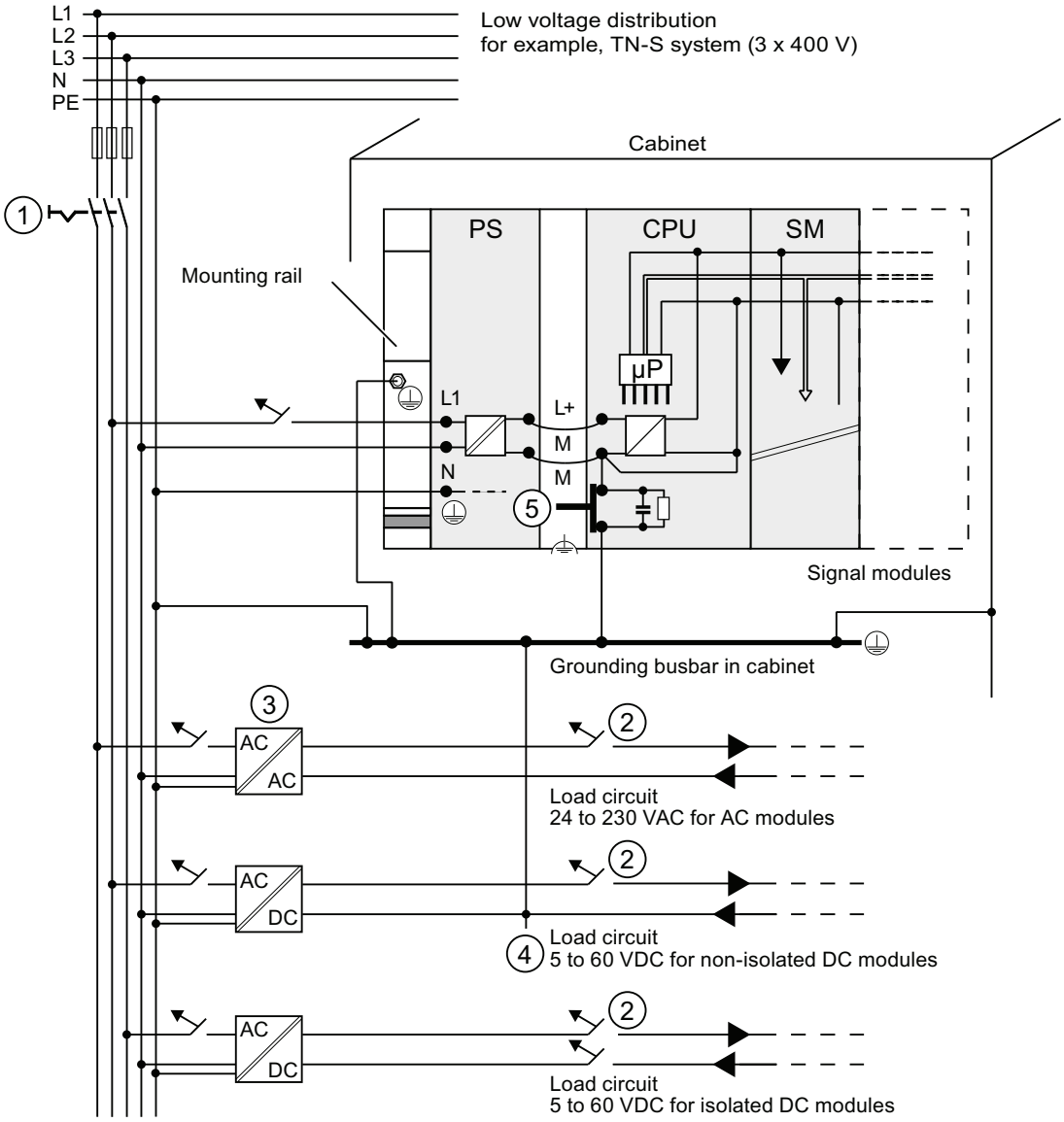

Number	Description
①	Master switch
②	Short-circuit and overload protection
③	The load current supply (galvanic isolation)
④	Removable connection to the grounding conductor, for ground fault localization
⑤	Grounding slide contact of the CPU (not CPU 31xC)

Figure 4-2 Connecting the load voltage reference potential

4.10 Selection of the load power supply

Task of the load power supply

The load power supply feeds the input and output circuits (load circuits), and the sensors and actuators.

Features of load power supply units

You will have to adapt the load power supply unit to your specific application. The table below shows a comparison of the various load power supply units and their features to help you make your choice:

Table 4- 10 Features of load power supply units

Necessary for ...	Feature of the load power supply	Comments
Modules requiring voltage supplies ≤ 60 VDC or ≤ 25 VAC. 24 VDC load circuits	Safety isolation	This is a common feature of the Siemens power supply series PS 307 and SITOP power series 6EP1.
24 VDC load circuits 48 VDC load circuits 60 VDC load circuits	Output voltage tolerances: 19.2 V to 28.8 V 40.8 V to 57.6 V 51 V to 72 V	-

Load power supply requirements

Only an extra-low voltage of ≤ 60 VDC which is safely isolated from mains may be used as load voltage. Safe isolation can be achieved in accordance with the requirements in, for example, VDE 0100 Part 410/HD 384-4-41/IEC 364-4-41 (as functional extra-low voltage with safe isolation) or VDE 0805/EN 60950/IEC 950 (as safety extra-low voltage SELV) or VDE 0106 Part 101.

Load current determination

The required load current is determined by the accumulated load current of all sensors and actuators connected to the outputs.

A short-circuit induces a surge current at the DC outputs which is 2 to 3 times higher than the rated output current, until the clocked electronic short-circuit protection comes into effect. Make allowances for this increased short-circuit current when selecting your load power supply unit. Uncontrolled load power supplies usually provide this excess current. With controlled load power supplies, and particularly for low output power up to 20 A, always ensure that the supply can handle this excess current.

Example: S7-300 with load power supply from PS 307

The figure below shows the overall S7-300 configuration (load power supply unit and grounding concept), with TN-S mains supply. The PS 307 supplies the CPU and the load current circuit of the 24 VDC modules.

Note

The layout of the power connections does not correspond with their physical arrangement; it was merely selected to give you a clear overview.

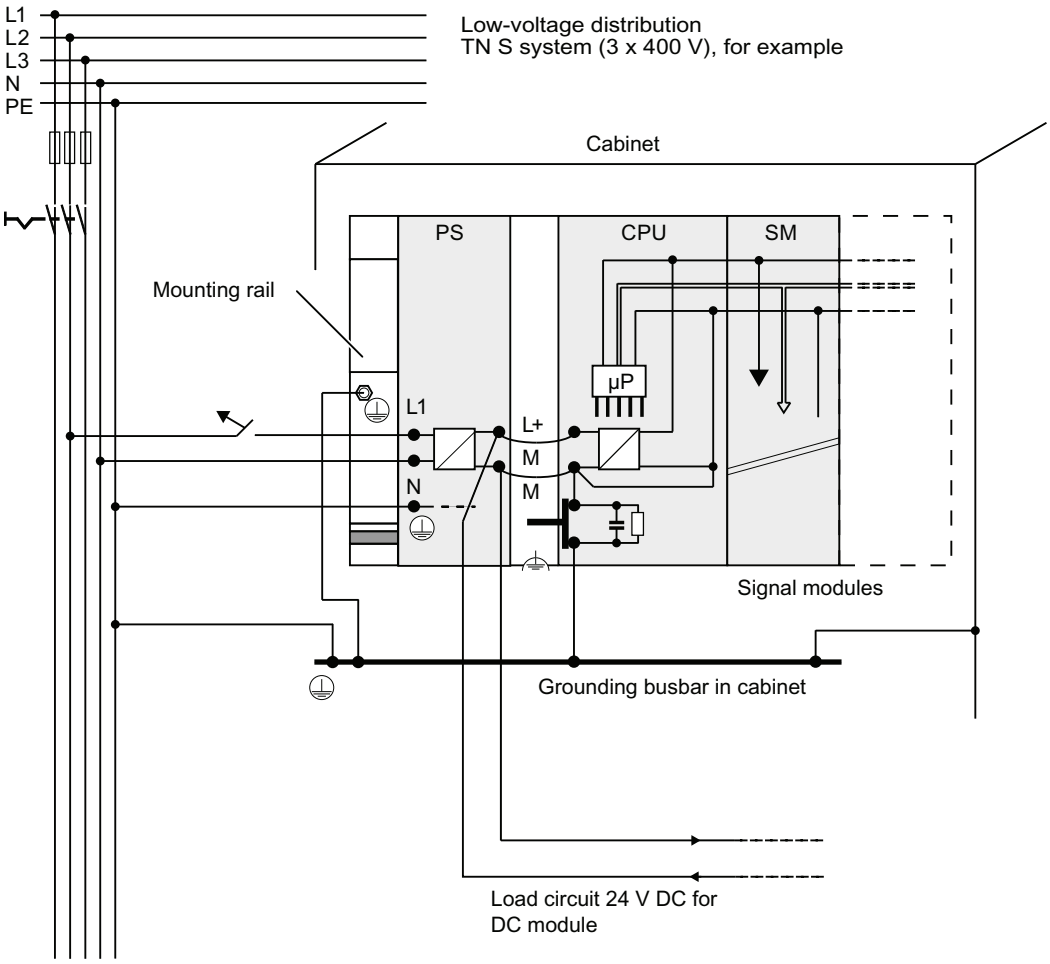

Example: S7-300 with load power supply from PS 307

4.11 Planning subnets

4.11.1 Overview

Subnets

Subnets available in SIMATIC for the various automation levels (process, cell, field and actuator/sensor level):

- Multi-Point Interface (MPI)
- PROFIBUS
- PROFINET (Industrial Ethernet)
- Point-to-point communication (PtP)
- Actuator/Sensor Interface (ASI)

Multi-Point Interface (MPI)

Availability: For all CPUs described in this document.

MPI is a small area subnet containing a small number of nodes at the field/cell level. It is a multipoint-capable interface in SIMATIC S7/M7 and C7. designed as PG interface, for networking a small number of CPUs, or for low volume data exchange with PGs.

MPI always retains the last configuration of the transmission rate, node number and highest MPI address, even after CPU memory reset, power failure or deletion of the CPU parameter configuration.

It is advisable to use the PROFIBUS DP network components for your MPI network configuration. The same configuration rules apply. Exception: OWG modules are not allowed in the MPI network.

PROFIBUS

Availability: CPUs with the "DP" name suffix are equipped with a PROFIBUS interface (CPU 315-2 DP, for example).

PROFIBUS represents the network at the cell and field level in the SIMATIC open, multivendor communication system.

PROFIBUS is available in two versions:

1. PROFIBUS DP field bus for high-speed cyclic data exchange, and PROFIBUS-PA for intrinsically safe applications (requires DP/PA coupler).
2. The cell level as PROFIBUS (FDL or PROFIBUS FMS) for high-speed data exchange with communication partners at the same authorization level (can only be implemented via CP).

PROFINET (Industrial Ethernet)

Availability: CPUs with the "PN" name suffix are equipped with a PROFINET interface (CPU 317-2 PN/DP or CPU 319-3 PN/DP for example). A PROFINET interface, or communication processors, can be used to implement Industrial Ethernet in an S7-300 CPU system.

Industrial Ethernet, in an open multivendor communication system, represents the SIMATIC network at the process and cell level. PROFINET CPUs, however, also support real-time communication at the field level. This structure also supports S7 communication. Industrial Ethernet is suitable for high-speed and high-volume data exchange, and for remote network operations via gateway.

PROFINET is available in two versions:

- PROFINET IO and
- PROFINET CBA.

PROFINET IO is a communication concept for the implementation of modular, distributed applications. PROFINET IO allows you to create automation solutions you are familiar with from PROFIBUS.

PROFINET CBA (Component based automation) is an automation concept for the implementation of applications with distributed intelligence. PROFINET CBA lets you create distributed automation solutions, based on default components and partial solutions. This concept satisfies demands for a higher degree of modularity in the field of mechanical and systems engineering by extensive distribution of intelligent processes.

Component based automation allows you to use complete technological modules as standardized components in large systems.

Point-to-point communication (PtP)

Availability: CPUs with "PtP" name suffix are equipped with a second interface, namely the PtP interface (CPU 314C-2 PtP, for example)

PtP does not represent a subnet in the common sense, because it is used to interconnect only two stations.

If a PtP interface is not available, you require PtP Communication Processors (CP).

Actuator/Sensor Interface (ASI)

Implementation by means of communication processors (CP).

The ASI, or actuator/sensor interface, represents a subnet system on the lowest process level for automation systems. It is designed especially for networking digital sensors and actuators. The maximum data volume is 4 bit per slave station.

S7-300 CPUs require communication processor for the ASI connection.

Reference

For additional information on communication, refer to the *Communication with SIMATIC* manual.

4.11.2 Configuring MPI and PROFIBUS subnets

4.11.2.1 Overview

The next section contains all the information you require to configure MPI, PtP and PROFIBUS subnets:

Contents

- MPI, PtP and PROFIBUS subnets
- Multi-Point Interface
- PROFIBUS DP
- MPI and PROFIBUS network components
- Example of networks - MPI

4.11.2.2 Basic information relating to MPI and PROFIBUS subnets

Convention: device = node

All devices you interconnect on the MPI or PROFIBUS network are referred to as nodes.

Segment

A segment is a bus line between two terminating resistors. A segment may contain up to 32 nodes. It is also limited with respect to the permitted line length, which is determined by the transmission rate.

Baud rate

Maximum transmission rates:

- MPI:
  - CPU 314C-2 PN/DP, CPU 315-2 PN/DP, CPU 317 and CPU 319-3 PN/DP: 12 Mbit/s
  - All other CPUs: 187,5 kbit/s
- PROFIBUS DP: 12 Mbit/s

Number of nodes

Maximum number of nodes per subnet.

Table 4- 11 Subnet nodes

Parameters	MPI	PROFIBUS DP
Number	127	126 [1]
Addresses	0 to 126	0 to 125
Comment	Default: 32 addresses Reserved addresses: • Address 0 for PG • Address 1 for OP	of those: • 1 master (reserved) • 1 PG connection (address 0 reserved) • 124 slaves or other masters

[1] Note the CPU-specific maximum specifications in the relevant CPU manual.

MPI/PROFIBUS DP addresses

You need to assign an address to all nodes in order to enable intercommunication:

- On the MPI network: an "MPI address"
- On the PROFIBUS DP network: "a PROFIBUS DP address"

You can use the PG to set the MPI/PROFIBUS addresses for each one of the nodes (some of the PROFIBUS DP slaves are equipped with a selector switch for this purpose).

Default MPI/PROFIBUS DP addresses

The table below shows you the default setting of the MPI/PROFIBUS DP addresses, and the factory setting of the highest MPI/PROFIBUS DP addresses for the nodes.

Table 4- 12 MPI/PROFIBUS DP addresses

Node (device)	Default MPI/ PROFIBUS DP address	Default highest MPI address	Default highest PROFIBUS DP address
PG	0	32	126
OP	1	32	126
CPU	2	32	126

Rules: Assignment of MPI/PROFIBUS DP addresses

Note the following rules before assigning MPI/PROFIBUS addresses:

- All MPI/PROFIBUS subnet addresses must be unique.
- The highest MPI/PROFIBUS address must be greater than or equal to the actual MPI/ PROFIBUS address and must be identical for each node. (Exception: connecting a PG to multiple nodes; refer to the next chapter).

Differences in the MPI addresses of CPs/FMs in an S7300 system

Table 4- 13 MPI addresses of CPs/FMs in an S7-300 system

Options	Example			
Example: A system containing an S7-300 CPU and 2 CPs. You have two options of assigning MPI addresses to CPs/FMs installed in a system:	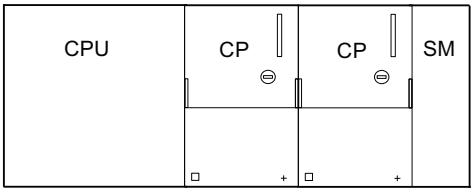			
	CPU	CP	CP	SM
1st option: The CPU accepts the MPI addresses you set for the CPs in STEP 7.	MPI addr.	MPI addr. + x	MPI addr. + y	
2nd option: The CPU automatically assigns MPI addresses to the CPs in its system, based on the following syntax: MPI address CPU; MPI address + 1; MPI addr. + 2. (Default)	MPI addr.	MPI addr. + 1	MPI addr. + 2	
Special feature: CPU 314C-2 PN/DP, CPU 315-2 PN/DP, CPU 317 and CPU 319-3 PN/DP	When the central rack of an S7-300 contains FM/CPs with their own MPI address, the CPU forms its own communication bus via the backplane bus for these FM/CPs and separates it from the other subnets. The MPI address of those FM/CPs is thus no longer relevant for the nodes on other subnets. The MPI address of the CPU is used to communicate with these FMs/CPs.			

Recommendation for MPI addresses

Reserve MPI address "0" for a service PG, or "1" for a service OP, for temporary connections of these devices to the subnet. You should therefore assign different MPI addresses to PGs/OPs operating on the MPI subnet.

Recommended MPI address of the CPU for replacement or service operations:

Reserve MPI address "2" for the CPU. This prevents duplication of MPI addresses after you connect a CPU with default settings to the MPI subnet (for example, when replacing a CPU). You should assign an MPI address greater than "2" to CPUs in the MPI subnet.

Recommendation for PROFIBUS addresses

Reserve PROFIBUS address "0" for a service PG that you can subsequently connect briefly to the PROFIBUS subnet as required. You should therefore assign unique PROFIBUS addresses to PGs integrated in the PROFIBUS subnet.

PROFIBUS DP: Electrical cables or fiber-optic cables?

Use fiber optic cables on a field bus with greater length, rather than copper conductors, in order to be independent on the transmission rate, and to exclude external interference.

Equipotential bonding

For information on what to take into account with respect to equipotential bonding in your network configuration, refer to the corresponding chapter in the appendix.

Reference

For more information, refer to the Communication section in *CPU 31xC and CPU 31x manual, technical data*.

4.11.2.3 Multi-Point Interface (MPI)

Availability

All the CPUs described here are equipped with an MPI interface

A CPU equipped with an MPI/DP interface is configured and supplied as MPI interface.

Properties

The MPI (Multi-Point Interface) represents the CPU interface for PG/OP connections, or for communication on an MPI subnet.

The default baud rate of all CPUs is 187.5 kbps. You can also set 19.2 kbps for communication with an S7-200. Baud rates up to max. 12 Mbps are possible with the CPU 314C-2 PN/DP, CPU 315-2 PN/DP, CPU 317-2 and with the CPU 319-3 PN/DP.

The CPU automatically broadcasts its bus configuration via the MPI interface (the transmission rate, for example). A PG, for example, can thus receive the correct parameters and automatically connect to a MPI subnet.

Devices capable of MPI communication

- PG/PC
- OP/TP
- S7-300 / S7-400 with MPI interface
- S7-200 (only at 19.2 kbps)

NOTICE
You may only connect PGs to an MPI subnet which is in RUN. Do not connect other stations (for example, OP, TP) to the MPI subnet while the system is running. Otherwise, transferred data might be corrupted as a result of interference, or global data packages may be lost.

Clock synchronization

The CPU's MPI interface supports clock synchronization. Detailed information is available in the*Manual CPU 31x and CPU 31x, Technical specifications, section Clock synchronization*.

4.11.2.4 PROFIBUS DP interface

Availability

CPUs with the "DP" have at least one DP interface.

The CPU 314C-2 PN/DP, CPU 315-2 PN/DP and the CPU 317-2 PN/DP feature one MPI/DP interface. The 317-2 DP and 319-3 PN/DP CPUs feature an MPI/DP interface plus an additional DP interface. The factory setting of the CPU's MPI/DP interface is MPI mode. You need to set DP mode in STEP 7 if you want to use the DP interface.

Operating modes for CPUs with two DP interfaces

Table 4- 14 Operating modes for CPUs with two DP interfaces

MPI/DP interface	PROFIBUS DP interface
• MPI • DP master • DP slave [1]	• not configured • DP master • DP slave [1]

[1] simultaneous operation of the DP slave on both interfaces is excluded

Properties

The PROFIBUS DP interface is mainly used to connect distributed I/O. PROFIBUS DP allows you to create large subnets, for example.

The PROFIBUS DP interface can be configured for operation in master or slave mode, and supports transmission rates up to 12 Mbps

The CPU broadcasts its bus parameters (transmission rate, for example) via the PROFIBUS DP interface when master mode is set. This functionality automatically provides the correct parameters for online operation of a programming device, for example. In your configuration you can specify to disable bus parameter broadcasting.

Note

(for DP interface in slave mode only)

When you disable the "Test, Commissioning, Routing" check box in the DP interface properties dialog box in STEP 7, the transmission rate settings of the master automatically override corresponding user-specific settings. This disables the routing function at this interface.

Devices capable of PROFIBUS DP communication

- PG/PC
- OP/TP
- DP slaves
- DP master
- Actuators/Sensors
- S7-300/S7-400 with PROFIBUS DP interface

Clock synchronization

Clock synchronization is possible via the CPU's PROFIBUS DP interface. Detailed information is available in the manual *CPU 31x and CPU 31x Manual, Technical specifications, Clock synchronization section*.

Reference

Additional information on the PROFIBUS can be found on the Internet.

4.11.2.5 Network components of MPI/DP and cable lengths

MPI subnet segment

You can install cables with a length of up to 50 m in an MPI subnet segment. This length of 50 m is the distance between the first and the last node of the segment.

Table 4- 15 Permissible cable length of a segment on the MPI subnet

Baud rate	S7-300 CPUs (non-isolated MPI interface) without CPU 314C-2 PN/DP, CPU 315-2 PN/DP, CPU 317, CPU 319	CPU 314C-2 PN/DP, CPU 315- PN/DP, CPU 317, CPU 319
19,2 kbit/s	50 m	1000 m
187,5 kbit/s		
1,5 Mbit/s	-	200 m
3,0 Mbit/s		100 m
6,0 Mbit/s		
12,0 Mbit/s		

Segment on the PROFIBUS subnet

The maximum cable length of a segment on the PROFIBUS subnet is determined by the set transmission rate.

Table 4- 16 Permissible cable length of a segment on the PROFIBUS subnet

Baud rate	Maximum cable length of a segment
9,6 kbit/s to 187.5 kbit/s	1000 m
500 kbit/s	400 m
1,5 Mbit/s	200 m
3 Mbit/s to 12 Mbit/s	100 m

Longer cable lengths via RS485 repeater/RS485 diagnostic repeater

You need to install RS485 repeaters for segments requiring cable lengths longer than the allowed length. For additional information about the RS485 Repeater refer to the *Module Specifications Manual*.

Stub cables

Make allowances for the maximum stub cable length when you connect bus nodes to a segment by means of stub cables, for example, a PG via standard PG cable.

For transmission rates up to 3 Mbit/s, you can use a PROFIBUS bus cable with bus connector as stub cable for connecting. For transmission rates of 3 Mbit/s and higher, use the PG patch cord to connect the PG or PC. You can connect several PG patch cords to the bus (for order numbers see table 4-20). Other types of stub cables are not permitted.

Length of stub cables

The table below shows the maximum permitted lengths of stub cables per segment:

Table 4- 17 Lengths of stub cables per segment

Baud rate	Max. length of stub cables per segment	Number of nodes with stub cable length of ...	
		1.5 m or 1.6 m	3 m
9,6 kbit/s to 93.75 kbit/s	96 m	32	32
187,5 kbit/s	75 m	32	25
500 kbit/s	30 m	20	10
1,5 Mbit/s	10 m	6	3
3 Mbit/s to 12 Mbit/s	[1]	[1]	[1]

[1] To connect PGs or PCs for operation at transmission rates starting at 3 Mbit/s, use the PG patch cord with order number 6ES7901-4BD00-0XA0. In a bus configuration, you can use multiple PG patch cords with this order number. Other types of stub cables are not permitted.

PG connecting cable

Table 4- 18 PG connecting cable

Type	Order number
PG connecting cable	6ES7901-4BD00-0XA0

PROFIBUS cables

For PROFIBUS DP or MPI networking we offer you the following bus cables for diverse fields of application:

Table 4- 19 Available bus cables

Bus cable	Order number
PROFIBUS cable	6XV1830-0AH10
PROFIBUS cable, halogen-free	6XV1830-0LH10
PROFIBUS underground cable	6XV1830-3FH10
PROFIBUS trailing cable	6XV1830-3BH10
PROFIBUS cable with PUR sheath for environments subject to chemical and mechanical stress	6XV1830-0JH10
PROFIBUS cable with PE sheath for the food and beverages industry	6XV1830-0GH10
PROFIBUS cable for festooning	6XV1830-3GH10

Properties of PROFIBUS cables

The PROFIBUS bus cable is a 2-wire, shielded twisted pair cable with copper conductors. It is used for hardwired transmission in accordance with US Standard EIA RS485.

The table below lists the characteristics of these cables.

Table 4- 20 Properties of PROFIBUS cables

Properties	Values
Wave impedance	approx. 135 Ω to 160 Ω (f = 3 MHz to 20 MHz)
Loop resistance	≤ 115 Ω/km
Effective capacitance	30 nF/km
Attenuation	0.9 dB/100 m (f = 200 kHz)
Permitted conductor cross-sections	0.3 mm^2 to 0.5 mm^2
Permitted cable diameter	8 mm ± 0.5 mm

Installation of bus cables

When you install PROFIBUS bus cables, you must not

- twist,
- stretch
- or compress them.

When wiring indoor bus cables, also maintain the following marginal conditions (d_A = outer cable diameter):

Table 4- 21 Marginal conditions for wiring interior bus cables

Characteristics	Condition
Bending radius (one-off)	≥80 mm (10 x d_A)
Bending radius (multiple times)	≥160 mm (20 x d_A)
Permitted temperature range during installation	-5 °C to +50 °C
Shelf and static operating temperature range	-30 °C to +65 °C

Reference

For information on the use of fiber-optic cables for PROFIBUS, refer to the SIMATIC NET, PROFIBUS Networks Manual.

Bus connector RS 485

Table 4- 22 Bus connector

Type	Order number
Bus connector RS 485 up to 12 Mbit/s with 90° cable exit without programming device interface with programming device interface	 6ES7972-0BA12-0XA0 6ES7972-0BB12-0XA0
Fast connect bus connector RS 485 up to 12 Mbit/s with 90° cable outlet in insulation displacement method without programming device interface with programming device interface	 6ES7972-0BA51-0XA0 6ES7972-0BB51-0XA0
Bus connector RS 485 up to 12 Mbit/s with 35° cable outlet (not for CPU 31xC, 312, 314 and 315-2 DP) without programming device interface with programming device interface	 6ES7972-0BA41-0XA0 6ES7972-0BB41-0XA0

Field of application

You need bus connectors to connect the PROFIBUS bus cable to an MPI or PROFIBUS-DP interface.

You do not require a bus connector for:

- DP slaves with degree of protection IP 65 (ET 200pro, for example)
- RS 485 repeater

RS 485 repeater

Type	Order number
RS 485 repeater	6ES7972-0AA01-0XA0
RS 485 Diagnostic Repeater	6ES7972-0AB01-0XA0

Note

SFC 103 "DP_TOPOL" can be used to initiate identification of the bus topology of a DP master system by way of the interconnected diagnostic repeaters.

Purpose

RS485 repeaters are used to amplify data signals on bus lines and to couple bus segments.

You require an RS 485 Repeater in the following situations:

- more than 32 network nodes
- when interconnecting a grounded with an ungrounded segment
- when exceeding the maximum line length in a segment

Longer cable lengths

If you want to implement cable lengths above those permitted in a segment, you must use RS485 repeaters. The maximum cable lengths between two RS 485 repeaters correspond to the maximum cable length of a segment. Please note that these maximum cable lengths only apply if there is no additional node interconnected between the two RS 485 repeaters. You can connect up to nine RS 485 repeaters in series. Note that you have to include the RS 485 repeater when counting the number of subnet nodes, regardless of whether or not it was assigned its own MPI/PROFIBUS address.

Reference

For additional information about the RS485 Repeater, refer to the *Module Specifications Manual*.

4.11.2.6 Cable lengths of MPI and PROFIBUS subnets

Example: Installation of an MPI subnet

The figure below shows you the block diagram of a MPI subnet.

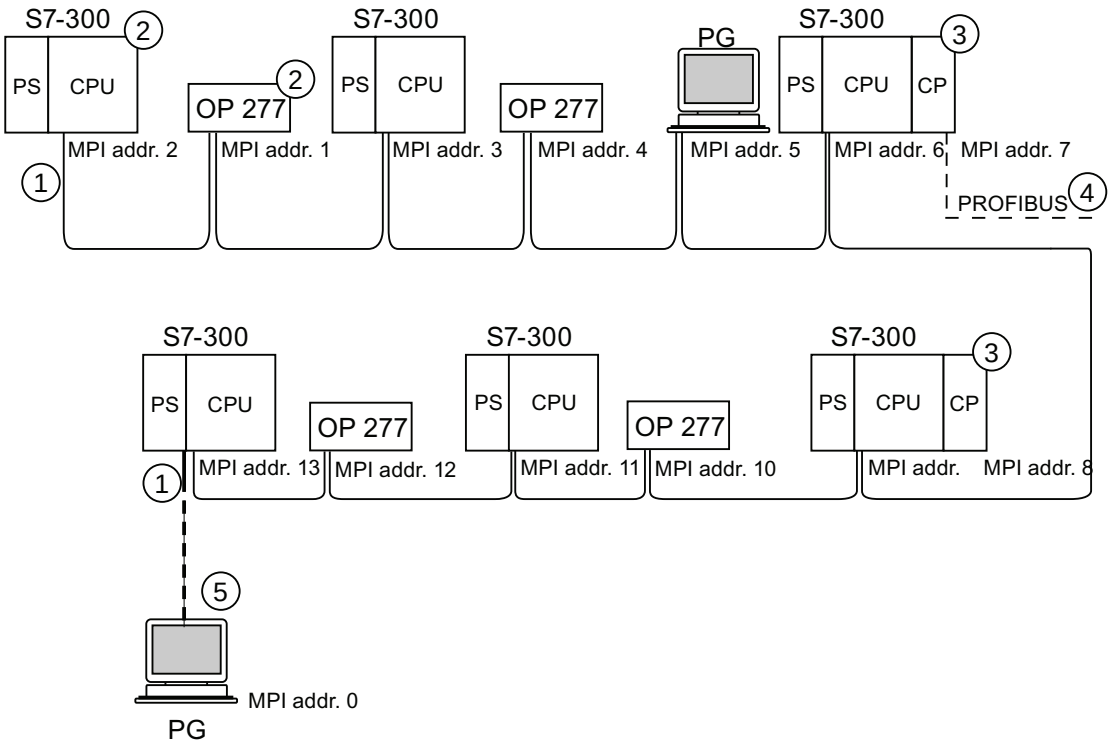

Number	Description
①	Terminating resistor enabled.
②	S7-300 and OP 277 have subsequently been connected to the MPI subnet using their default MPI address.
③	CPU 31xC (except CPU 314C-2 PN/DP), 312, 314, CPU 315-2 DP: You can freely assign the MPI addresses of the CPs/FMs with these CPUs. CPU 314C-2 PN/DP, CPU 317-2 DP, 315-2 PN/DP, 317-2 PN/DP, 319-3 PN/DP: CPs or FMs do not have their own MPI address with these CPUs.
④	In addition to the MPI address, the CP also has a PROFIBUS address (7 in this case).
⑤	Connected via stub cable using the default MPI address only for commissioning/maintenance.

Example: Maximum distances in the MPI subnet

The figure below shows you:

- a possible MPI subnet configuration
- maximum distances possible in an MPI subnet
- the principle of "Line extension" using RS 485 repeaters

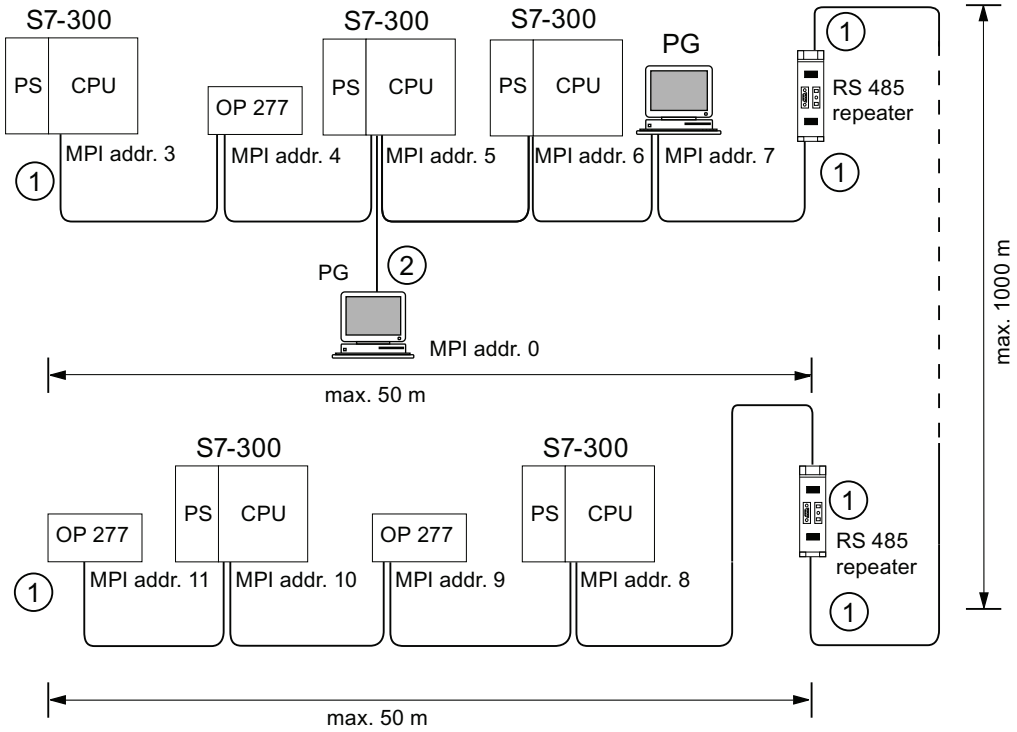

Number	Description
①	Terminating resistor enabled
②	PG connected by means of stub cable for maintenance purposes

Example: Terminating resistor in the MPI subnet

The figure below shows you an example of an MPI subnet and where to enable the terminating resistor.

The figure below illustrates where the terminating resistors must be enabled in an MPI subnet. In this example, the programming device is connected via a stub cable only for the duration of commissioning or maintenance.

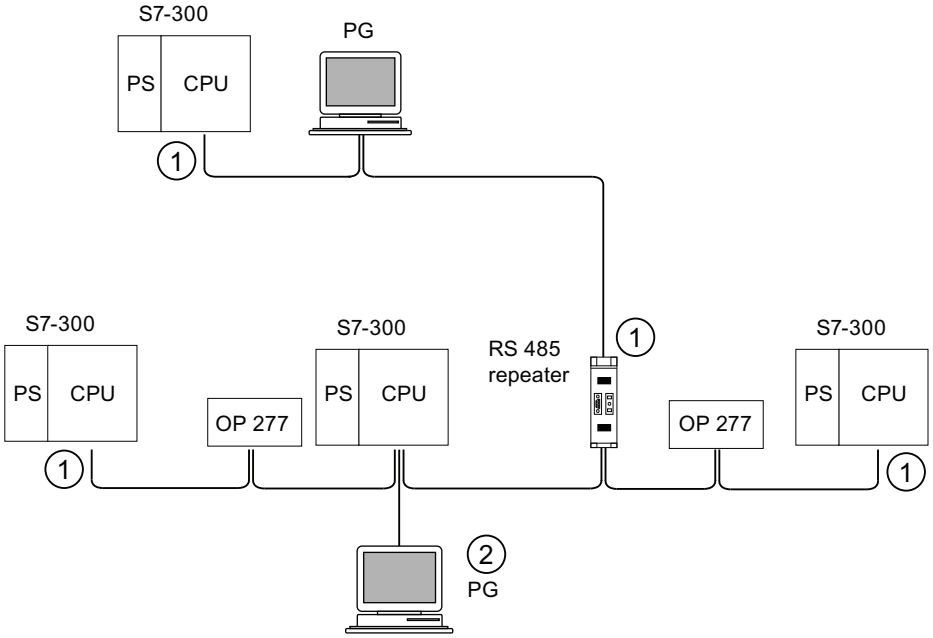

Number	Description
①	Terminating resistor enabled
②	PG connected by means of stub cable for maintenance purposes

WARNING

Disturbance of data traffic might occur on the bus. A bus segment must always be terminated at both ends with the terminating resistor. This, for example, is not the case if the last slave with bus connector is off power. The bus connector draws its power from the station, and the terminating resistor is thus disabled. Please make sure that power is always supplied to stations on which the terminating resistor is active. Alternatively, the PROFIBUS terminator can also be used as active bus termination.

Example: Installation of a PROFIBUS subnet

The figure below shows you the basic principles of a PROFIBUS subnet installation.

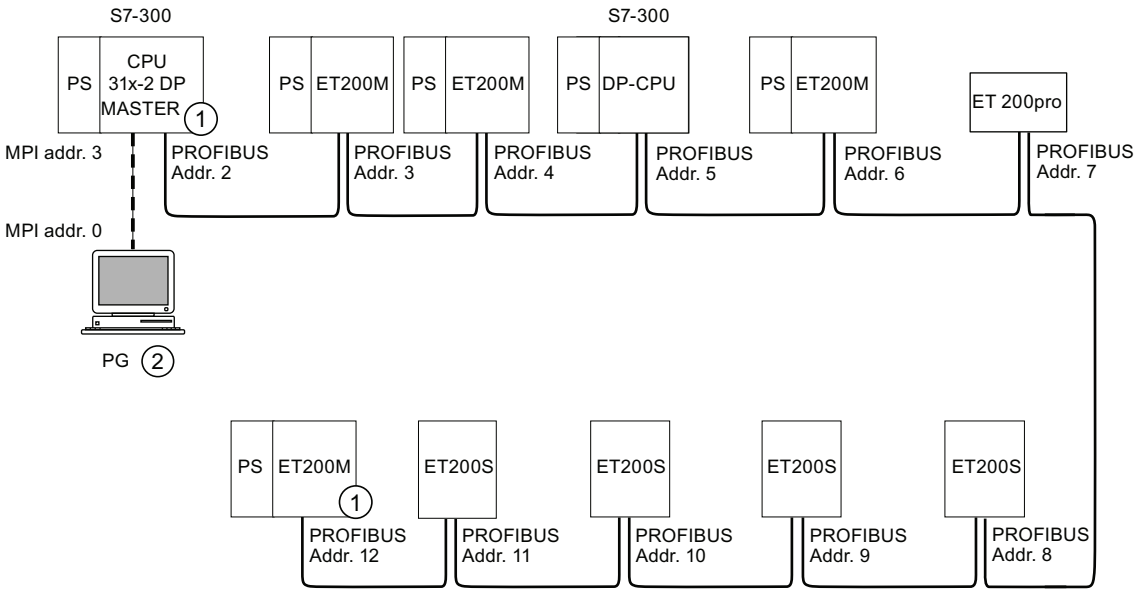

Number	Description
①	Terminating resistor enabled
②	PG connected by means of stub cable for maintenance purposes

Example: CPU 314C-2 DP as MPI and PROFIBUS node

The figure below shows you an assembly with a CPU 314C-2 DP integrated in an MPI subnet and also operated as DP master in a PROFIBUS subnet.

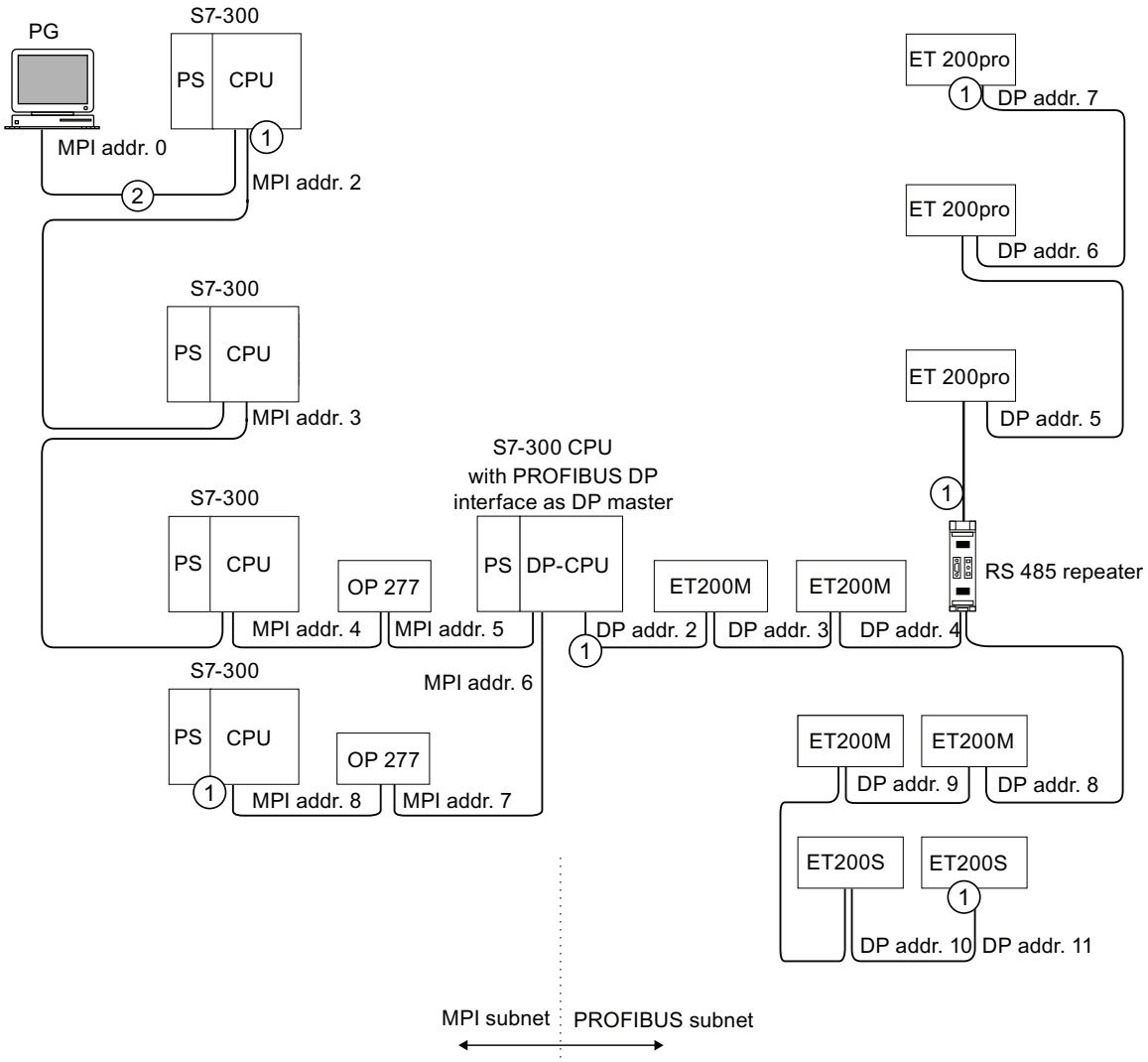

Number	Description
①	Terminating resistor enabled
②	PG connected via a stub cable for maintenance or commissioning purposes

4.11.3 Configuring PROFINET subnets

4.11.3.1 Overview

The next section contains all the information you require to configure PROFINET subnets:

Contents

- PROFINET devices
- Integration of field bus system into PROFINET
- PROFINET IO and PROFINET CBA (Component-Based Automation)
- PROFINET cable lengths
- Ethernet bus cable and connector
- Example of a PROFINET subnet
- Example of a PROFINET IO system

4.11.3.2 PROFINET devices

Definition: Devices in the PROFINET environment

Within the context of PROFINET, "device" is the generic term for:

- Automation systems (e.g. PLC, PC)
- Field devices (for example, PLC, PC, hydraulic devices, pneumatic devices)
- Active network components (for example, switches, gateways, routers)
- PROFIBUS or other fieldbus systems

The main characteristic of a device is its integration into PROFINET communication by means of Ethernet or PROFIBUS.

The following device types are distinguished based on their attachment to the bus:

- PROFINET devices
- PROFIBUS devices

Definition: PROFINET devices

A PROFINET device always has at least one Industrial Ethernet port. A PROFINET device can also be operated as proxy to act as representative that safeguards Ethernet communication between PROFIBUS devices (PROFIBUS slaves connected to an existing PROFIBUS interface) and additional PROFINET devices on the Ethernet.

Definition: PROFIBUS devices

A PROFIBUS device has at least one PROFIBUS link with an electric interface (RS485) or an optical interface (polymer optical fiber, POF).

A PROFIBUS device cannot take part directly in PROFINET communication, but must be implemented by means of PROFIBUS master with PROFINET link or Industrial Ethernet/PROFIBUS link (IE/PB Link) with proxy functionality.

Comparison of the terminology in PROFIBUS DP and PROFINET IO

The following schematic shows you the general names of the most important devices in PROFINET IO and PROFIBUS DP. The table below shows the designation of the various components in the PROFINET IO and PROFIBUS DP context.

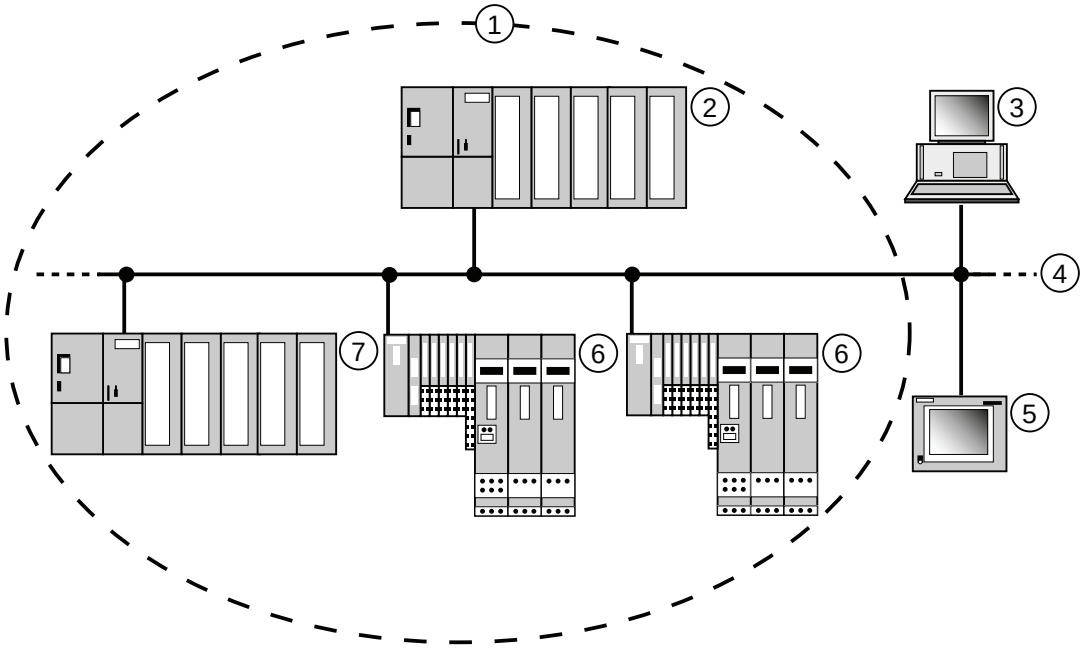

Number	PROFINET	PROFIBUS	Remark
①	IO system	DP master system	
②	IO controller	DP master	Device used to address the connected IO devices/DP slaves. That is: The IO controller/DP master exchanges input and output signals with field devices. The IO controller/ DP master is often the controller on which the automation program runs.
③	PG/PC (IO supervisor)	PG/PC (Class 2 DP master)	PG/PC/HMI device for commissioning and diagnostics
④	Industrial Ethernet	PROFIBUS	Network infrastructure
⑤	HMI (Human Machine Interface)	HMI	Device for operating and monitoring functions
⑥	IO device	DP slave	Distributed field device assigned to one of the IO controllers/DP masters, for example, distributed IO, valve terminal, frequency converter, and switches with integrated PROFINET IO functionality.
⑦	I device	Intelligent slave	Intelligent field device that can be configured as I-device/I-slave

Figure 4-3 PROFINET and PROFIBUS devices

Slots and Submodules

A PROFINET IO device is modularly structured - similar to a PROFIBUS DP slave.

In doing so, modules are fitted to slots and submodules to subslots. Channels are located on the modules / submodules using which process signals can be read in and issued.

The following graphic illustrates the situation.

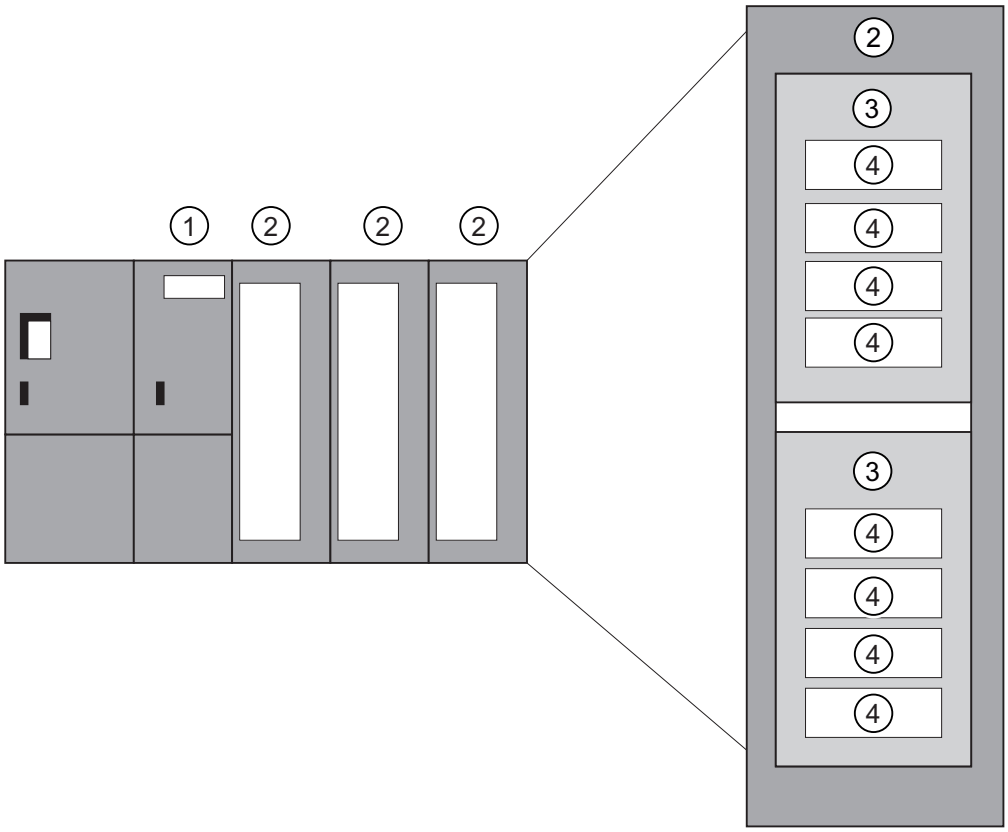

Figure 4-4 Module, Submodule, Slot, and Channel

Number	Description
①	Interface module
②	Module with components
③	Submodule
④	Channel

In principle it is possible to divide a slot into additional subslots on which the submodules are connected.

4.11.3.3 Integration of fieldbuses into PROFINET

Fieldbus integration

PROFINET allows you to use a proxy to integrate existing fieldbus systems (for example, PROFIBUS, ASI) into PROFINET. In this way, you can set up hybrid systems consisting of fieldbus and Ethernet-based subsystems. A continuous technological transition to PROFINET is thus possible.

Interconnecting PROFINET and PROFIBUS

You can interconnect PROFIBUS devices to the local PROFIBUS interface of a PROFINET device. This allows you to integrate existing PROFIBUS configurations in PROFINET.

The following picture illustrates the network types that are supported for PROFINET:

- Industrial Ethernet and
- PROFIBUS.

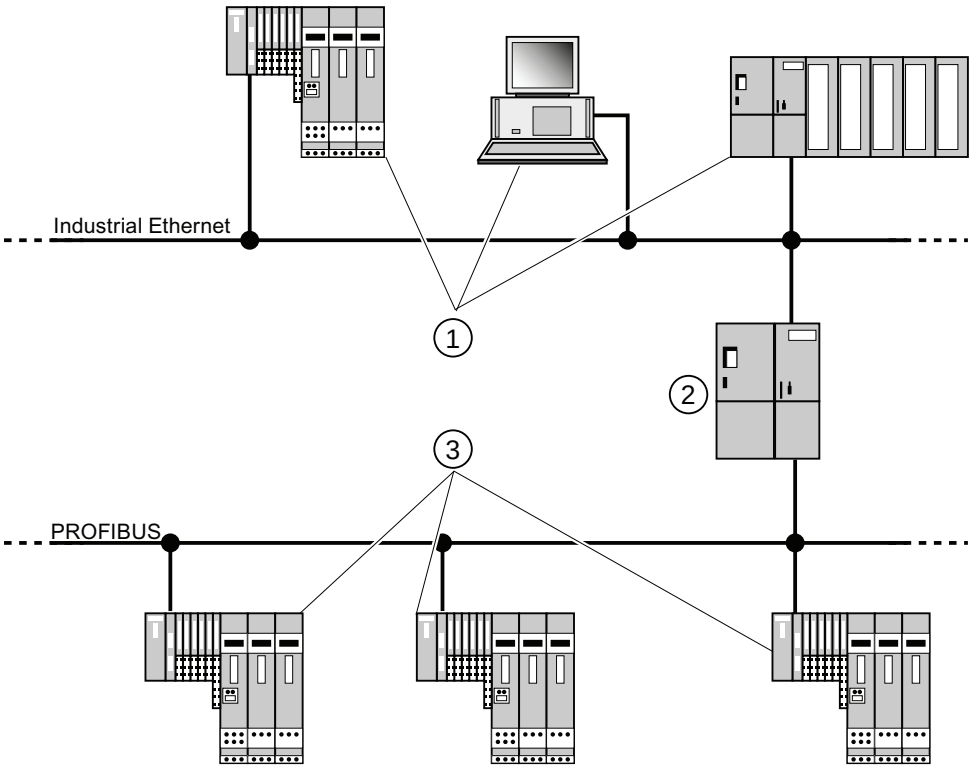

① PROFINET devices
② PROFINET devices with proxy functionality
③ PROFIBUS devices

PROFINET device with proxy functionality = substitute

The PROFINET device with proxy functionality is the substitute for a PROFIBUS device on Ethernet. The proxy functionality allows a PROFIBUS device to communicate not only with its master but also with all nodes on PROFINET.

With PROFINET, existing PROFIBUS systems can be integrated into the PROFINET communication with the aid of an IE/PB link, for example. The IE/PB link then handles communication via PROFINET on behalf of the PROFIBUS components.

In this way, you can link both DPV0 and DPV1 slaves to PROFINET.

Additional information

For information on the differences and common features of PROFINET IO and PROFIBUS DP and information on migrating from PROFIBUS DP to PROFIBUS IO, refer to the *From PROFIBUS DP to PROFINET IO* programming manual.

4.11.3.4 PROFINET IO and PROFINET CBA

What is PROFINET IO?

As part of PROFINET, PROFINET IO is a communication concept that is used to implement modular, distributed applications.

PROFINET IO allows you to create automation solutions, which are familiar to you from PROFIBUS.

PROFINET IO is implemented using the PROFINET standard for programmable controllers.

The STEP 7 engineering tool helps you to structure and configure an automation solution.

In STEP 7 you have the same application view, regardless of whether you are configuring PROFINET devices or PROFIBUS devices. Program your user program in the same way for both PROFINET IO and PROFIBUS DP, since you will use the extended blocks and system status lists for PROFINET IO.

Reference

Information on new and modified blocks and system status lists can be found in the *From PROFIBUS DP to PROFINET IO* programming manual.

What is PROFINET CBA?

As part of PROFINET, PROFINET CBA (Component Based Automation) is an automation concept that focuses on the following:

- Implementation of modular applications
- Machine - machine communication

PROFINET CBA lets you create distributed automation solutions, based on default components and partial solutions. This concept meets the demand for a greater modularity in the field of mechanical and systems engineering by extensive distribution of intelligent processes.

With Component Based Automation you can implement complete technological modules as standardized components that can be used in large systems.

You create the modular, intelligent components of the PROFINET CBA in an engineering tool (which may differ according to the device manufacturer). Components that are formed from SIMATIC devices are created with STEP 7, and are interconnected using the SIMATIC iMAP tool.

Interaction between PROFINET IO and PROFINET CBA

PROFINET CBA is used to integrate PROFINET IO systems into machine-to-machine communication. A PROFINET component is created from a PROFINET IO system in STEP 7, for example. With SIMATIC iMap, you can configure systems consisting of several such components. The communication connections between the devices are configured simply as interconnection lines.

The following graphic illustrates a distributed automation solution with several components which communicate via PROFINET. The components on the right have IO devices and an IO controller on PROFINET IO.

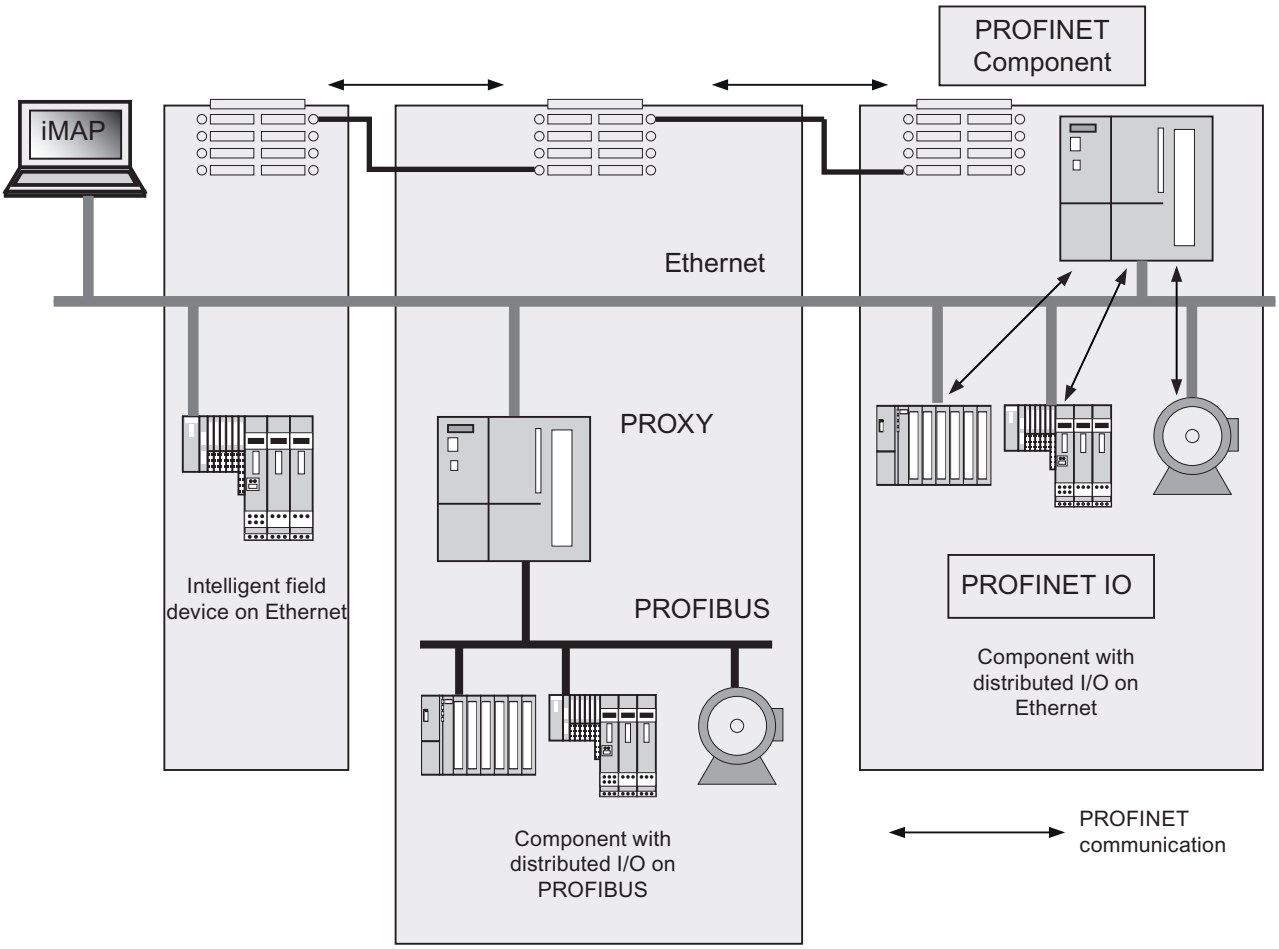

Figure 4-5 PROFINET CBA - modular concept

Extent of PROFINET CBA and PROFINET IO

PROFINET IO and CBA represent two different views of automation devices on Industrial Ethernet.

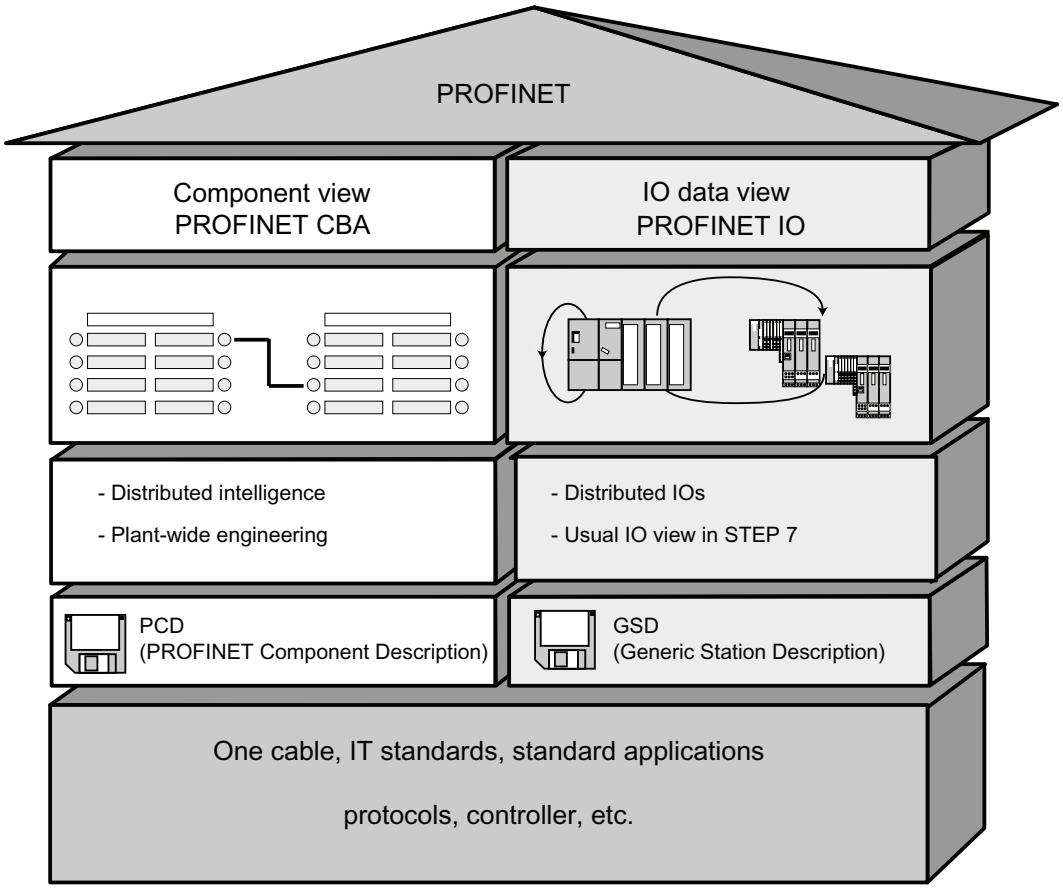

Figure 4-6 Extent of PROFINET CBA and PROFINET IO

Component Based Automation divides the entire system into various functions. These functions are configured and programmed.

PROFINET IO provides an image of the system that is very similar to the view obtained in PROFIBUS. You continue to configure and program the individual automation devices.

Controllers in PROFINET IO and PROFINET CBA

You can also use some PROFINET IO controllers for PROFINET CBA.

The following PROFINET devices can act as a **PROFINET CBA and IO controller**:

- Programmable logic controllers,
  - S7-300 CPU 31x-2 PN/DP, firmware version V2.3 or later
  - S7-300 CPU 314C-2 PN/DP, firmware version V3.3 or later
  - S7-300 CPU 319-3 PN/DP, firmware version V2.4.0 or later
- CP 343-1 - as of version 6GK7343-1EX21-0XE0 and 6GK7343-1GX21-0XE0
- CP 443-1 Advanced with MLFB 6GK7443-1EX40 as of version V2.1 and 6GK7443-1EX41 as of version V1.0.

The following PROFINET devices can only act as a **PROFINET IO controller**:

- PCs that are linked to a PROFINET IO-compatible CP (CP 1616 for example) or via SOFTNET PN IO (with CP 1612 for example). With the CP 1616 and SOFTNET PN IO, the user program runs in the CPU of the PC.
- SIMOTION devices for particularly stringent real-time requirements.

Some PROFINET devices can only be used as **PROFINET CBA controllers**, for example, PCs with standard Ethernet interfaces and the WinLC software.

- CP443-1 EX 40 V2.1 or later or CP443-1 EX41 V 1.0 or later

Proxy in PROFINET IO and PROFINET CBA

The proxies for PROFINET IO and proxies for PROFINET CBA are different.

In PROFINET IO, the proxy for PROFINET IO represents each connected PROFIBUS DP slave as a **PROFINET IO device** on the PROFINET.

In PROFINET CBA, the proxy for PROFINET CBA represents every connected PROFIBUS DP slave as one **component,** which can participate in PROFINET communication.

There are thus different IE/PB links for PROFINET IO and PROFINET CBA, for example. At present, you can only use a CPU 31x PN/DP as a proxy for PROFINET CBA.

Linking PROFIBUS devices via an IE/PB link

Please note that proxy functionality is available in both PROFINET IO and PROFINET CBA. For the IE/PB link, this means that you must use different devices depending on the system you are using.

Configuring and integrating components and devices in PROFINET communication

In component based automation, an interconnection editor is used to incorporate the components (SIMATIC iMap, for example). The components are described in a PCD file.

With PROFINET IO, the devices are incorporated using an engineering system (STEP 7, for example). The devices are described in a GSD file.

Interaction between PROFINET CBA and PROFINET IO

PROFINET IO integrates field devices (IO devices) into PROFINET. The input and output data of the IO devices are processed in the user program. The IO devices with their IO controller can, in turn, be part of a component in a distributed automation structure.

Communication between a CPU as the IO controller and the assigned IO devices as PROFINET IOs is configured in the same way as for a PROFIBUS DP master system in STEP 7. The user program is also created in STEP 7. From the entire PN IO system, you create a component in STEP 7 (see Figure PROFINET CBA).

You then configure communication between the components in user-friendly SIMATIC iMAP.

Update time

The IO controller (outputs) provides new data to all IO devices in the PROFINET IO system within the update time. This means that all the IO devices have sent their latest data to the IO controller (inputs).

Note

Send Cycles for Cyclical Data Exchange

STEP 7 determines the update time on the basis of the existing hardware configuration and the resulting cyclical data traffic. During this time, a PROFINET IO device has exchanged its user data with the associated IO controller.

You can set the update date either for a whole bus segment of an IO controller, or for an individual IO device.

In STEP 7, the update time can be changed manually.

The smallest possible update time in a PROFINET system depends on the following factors:

- Number of PROFINET IO devices
- Quantity of configured user data
- PROFINET IO communication allocation (compared to PROFINET CBA communication allocation)

Additional cyclical PROFINET services

The update time dialog in STEP 7/HW Config is used to set an update date for the device to be reserved for PROFINET IO.

See the STEP 7 Online Help for more information.

Send cycle

Period between two successive intervals for IRT or RT communication. The send cycle is the shortest possible transmit interval for exchanging data. The calculated update times are multiples of the send cycle.

The minimum possible update time thus depends on the minimum send cycle of the IO controller that can be set.

If both the IO controller and the IO device support a send cycle of 250 µs, you can achieve a minimum update time of 250 µs.

It is also possible to operate IO devices that only support a send cycle of 1 ms on an IO controller that works with a send cycle of 250 µs. The minimum update time for the IO devices concerned is then at least 1 ms, however.

Update times for CPU 31x PN/DP

The following update times can be parameterized:

Real-time communication	Send cycle		Update time
With RT:	250 µs	⇒	250 µs to 128 ms
	500 µs	⇒	500 µs to 256 ms
	1 ms	⇒	1 ms to 512 ms
	2 ms	⇒	2 ms to 512 ms
	4 ms	⇒	4 ms to 512 ms
For IRT with the "high flexibility" option:	250 µs	⇒	250 µs to 128 ms
	500 µs	⇒	500 µs to 256 ms
	1 ms	⇒	1 ms to 512 ms
For IRT with the "high performance" option:	250 µs	⇒	250 µs to 4 ms
	500 µs	⇒	500 µs to 8 ms
	1 ms	⇒	1 ms to 16 ms
	2 ms	⇒	2 ms to 32 ms
	4 ms	⇒	4 ms to 64 ms

The minimum update time is determined by the number of devices used, by the volume of configured user data, and by the time slice for PROFINET IO communication. *STEP 7* automatically considers these dependencies during configuration.

Send cycles with odd values for IRT with the "high performance" option:

In addition to the "even value" send cycles (250 µs,
500 µs, 1 ms, 2 ms, 4 ms) in the range from 250 µs to 4 ms, you can set up any multiple of 125 µs as "odd value" send cycle for IRT with the "high performance" option: 375 µs, 625 µs … 3.875 ms.

Rule for all PROFINET IO devices operating with "odd value" send cycles:

- Update time = send cycle
- It is not possible to complement IRT with the "high performance" through RT devices

Details of the possible uses of the individual products

See also the documentation for the product concerned.

4.11.3.5 PROFINET cable lengths and network expansion

Network expansion options are based on various factors (hardware design used, signal propagation delay, minimum distance between data packets, etc.)

Twisted pair cables

Twisted pair cables are used to interconnect terminal devices with the Industrial Ethernet FC cabling system. It is designed for use in environments with low EMC load, for example, in offices or in control cabinets.

The length of twisted pair cables between two devices may not exceed 10 m.

Compared to Industrial Ethernet twisted pair cables, the twisted pair cables are significantly thinner and more flexible due to the reduced effort for their shielding. The connectors used in connecting industrial twisted pair components are standardized RJ45 connectors and sub D connectors.

Product range

The following twisted pair cables are available:

Table 4- 23 Data for ready-made twisted pair cables

Cable designation	Application	Available lengths	Order number
TP Cord RJ45/RJ45	TP connecting cable with two RJ45 connectors	0.5 m 1.0 m 2.0 m 6.0 m 10.0 m	6XV1850-2GE50 6XV1850-2GH10 6XV1850-2GH20 6XV1850-2GH60 6XV1850-2GN10
TP XP cord RJ45/RJ45	TP crossover cable with two RJ45 connectors	0.5 m 1.0 m 2.0 m 6.0 m 10.0 m	6XV1850-2HE50 6XV1850-2HH10 6XV1850-2HH20 6XV1850-2HH60 6XV1850-2HN10
TP cord 9/RJ45	TP cable with 9-pin sub-D connector and RJ45 connector	0.5 m 1.0 m 2.0 m 6.0 m 10.0 m	6XV1850-2JE50 6XV1850-2JH10 6XV1850-2JH20 6XV1850-2JH60 6XV1850-2JN10
TP XP cord 9/RJ45	Crossover TP cable with 9-pin sub-D connector and RJ45 connector	0.5 m 1.0 m 2.0 m 6.0 m 10.0 m	6XV1850-2ME50 6XV1850-2MH10 6XV1850-2MH20 6XV1850-2MH60 6XV1850-2MN10
TP patch cable 9-45/RJ45	TP cable with RJ45 connector and sub-D connector, 45° cable exit (for OSM/ESM only)	1.0 m	6XV1850-2NH10
TP XP patch cable 9-45/RJ45	Crossover TP cable with RJ45 connector and sub-D connector with 45° cable exit (for OSM/ESM only)	1.0 m	6XV1850-2PH10
TP XP patch cable 9/9	Crossover TP cable for direct interconnection of two industrial Ethernet network components with ITP interface, with two 9-pin sub-D connectors	1.0 m	6XV1850-2RH10
TP cord RJ45/15	TP cable with 15-pin sub-D connector and RJ45 connector	0.5 m 1.0 m 2.0 m 6.0 m 10.0 m	6XV1850-2LE50 6XV1850-2LH10 6XV1850-2LH20 6XV1850-2LH60 6XV1850-2LNN10
TP XP patch cable RJ45/15	Crossover TP cable with 15-pin sub-D connector and RJ45 connector	0.5 m 1.0 m 2.0 m 6.0 m 10.0 m	6XV1850-2SE50 6XV1850-2SH10 6XV1850-2SH20 6XV1850-2SH60 6XV1850-2SN10

Industrial Ethernet Fast Connect twisted pair cables

The Fast Connect twisted pair cabling system is ideal for structured cabling in the production hall. FastConnect cables allow for the quick and easy on-site assembly of patch cables. The RJ45 cabling technology is the existing standard and is also available as an industrial version which allows structured cabling.

Product range

Industrial Ethernet Fast Connect twisted pair cables available:

Table 4- 24 Data for user assemblies using patch cables of the Fast Connect product family

Cable designation	Application	Available lengths	Order number
SIMATIC NET IE FC RJ 45 PLUG 145	RJ45 connector for Industrial Ethernet with rugged metal housing and four integrated insulation displacement terminals for connecting Industrial Ethernet FC installation cables; 145° cable outlet.	1 piece 10 items 50 items	6GK1901-1BB30-0AA0 6GK1901-1BB30-0AB0 6GK1901-1BB30-0AE0
SIMATIC NET IE FC RJ 45 PLUG 180	RJ45 connector for Industrial Ethernet with rugged metal housing and four integrated insulation displacement terminals for connecting Industrial Ethernet FC installation cables; 180° cable outlet.	1 piece 10 items 50 items	6GK1901-1BB10-2AA0 6GK1901-1BB10-2AB0 6GK1901-1BB10-2AE0

Reference

Detailed information is available in the

- SIMATIC NET Manual: Twisted-pair and fiber-optic networks (6GK1970-1BA10-0AA0)
- Internet under Service & Support (http://www.siemens.com/automation/service&support)
- Catalog IK PI, SIMATIC NET (E86060-K6710-A101-B5)

See also

Connecting the PG to a node (Page 156)

Connecting the PG to several nodes (Page 157)

4.11.3.6 Connectors and other components for Ethernet

The selection of the bus cable, bus connector and other components for Ethernet (for example, switches, etc.) depends on the intended application.

We offer a range of products covering a variety of applications for the installation of an Ethernet connection.

Reference

- *SIMATIC NET: Twisted-pair and fiber-optic networks* (6GK1970-1BA10-0AA0)

4.11.3.7 Example of a PROFINET subnet

Example: Installation of a PROFINET subnet

The graphic illustrates the combination of corporate level and process control level via industrial Ethernet. PCs in a classical office environment can be used to acquire data of the process automation system.

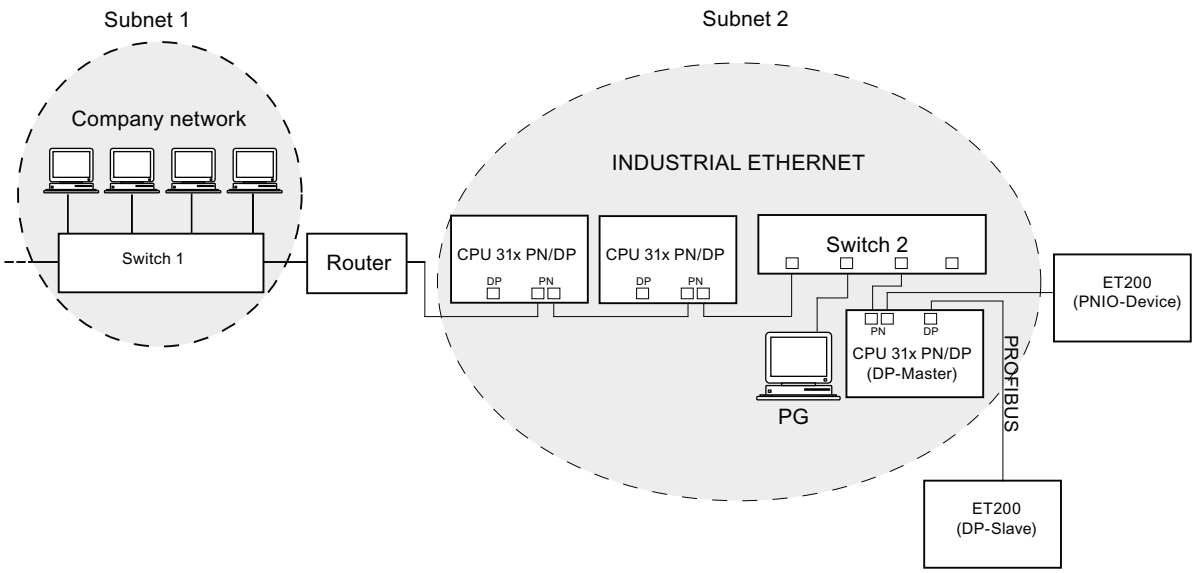

Figure 4-7 Example of a PROFINET subnet

Installation guidelines

PROFINET allows you to set up a high-performance and continuous communication system. You can additional increase performance by using the following installation guidelines.

- Interconnect a router between the office network and the PROFINET system. Use the router to define access privileges for your PROFINET system.
- Where practical, set up your PROFINET system in a star architecture (for example, in the control cabinet).
- Keep the number of switches low. This increases clarity of your PROFINET system architecture.
- Connect your programming device (PG) close to the communication partner (for example, programming device and communication partner on the same switch).
- Modules with PROFINET interfaces may only be operated in LANs where all nodes are equipped with SELV/PELV power supplies or protection systems of equal quality.
- A data transfer device that ensures this safety must be specified for the coupling to the WAN.

Reference

For detailed information on Industrial Ethernet networks or network components, refer to:

- the Internet URL http://www.siemens.com/automation/service&support.
- The STEP 7 Online Help. There you can also find additional information on IP address assignment.
- The Communication with SIMATIC (EWA 4NEB 710 6075-01) manual
- In the SIMATIC NET Twisted-Pair and Fiber-Optic Networks (6GK1970-1BA10-0AA0) manual

4.11.3.8 PROFINET IO System

Functions of PROFINET IO

The following graphic shows the new functions in PROFINET IO:

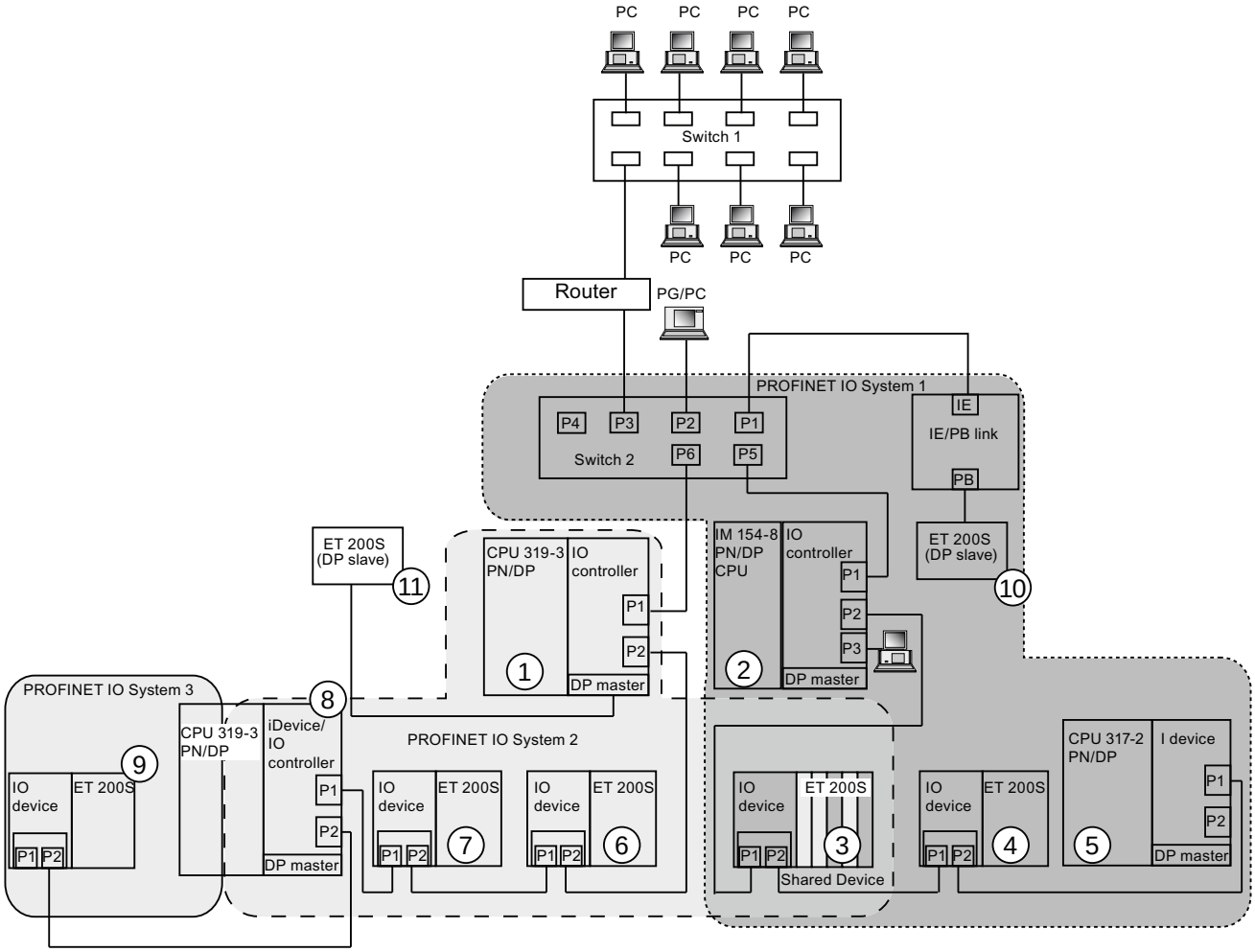

The graphic shows	Examples of connection paths
The connection of company network and field level	You can access devices at the field level from PCs in your company network Example: • PC - Switch 1 - Router - Switch 2 - CPU 319-3 PN/DP ①.
Connections between the automation system and field level	You can also access other areas on the Industrial Ethernet from a programming device at the field level. Example: • PG - integrated switch IM 154-8 CPU ② - Switch 2 - integrated switch CPU 319--3 PN/DP ① - integrated switch IO Device ET 200 S ⑤ - on IO Device ET 200S ⑥.

The graphic shows	Examples of connection paths
The IO controller of the CPU IM 154-8 CPU ② sets up PROFINET IO system 1 and directly controls devices on the Industrial Ethernet and PROFIBUS.	At this point, you can see the IO feature between the IO controller, intelligent device, and the IO devices on the Industrial Ethernet: • IM 154-8 CPU ② acts as IO controller for the IO devices ET 200S ③ and ET 200S ④, for switch 2, and for the intelligent device CPU 317-2 PN/DP ⑤. • IO device ET 200S ③ is operated as shared device, which means that IM154-8 CPU ② operating as controller can access only the (sub)modules it has been assigned as controller for that IO device. • The IM 154-8 CPU ② is also the IO controller for ET 200S (DP slave) ⑩ by way of IE/PB Link.
The CPU 319-3 PN/DP ① operates as IO controller for PROFINET system 2 and, at the same time, as DP master on the PROFIBUS. In addition to other IO devices, this IO controller is used to operate a CPU319-3 PN/DP ⑧ as intelligent device which, in turn, operates a PROFINET subsystem as IO controller.	Here you can see that a CPU can be both the IO controller for an IO device and the DP master for a DP slave: • CPU 319-3 PN/DP ① is the IO controller for the IO devices ET 200S ⑥ and ET 200S ⑦, and for the intelligent device CPU 319-3 PN/DP ⑧. • Moreover, CPU319-3 PN/DP ① shares the IO device ET 200S ③ with IO controller IM 154-8 CPU ②, which means that the CPU319-3 PN/DP ① operating as controller can access only the (sub)modules it has been assigned as controller for that IO device. • CPU319-3 ⑧, which is operated as intelligent device on CPU319-3 PN/DP ①, also acts as IO controller and sets up its own PROFINET system 3 on which the IO device ET 200S ⑨ is operated. • The CPU 319-3 PN/DP ① is the DP master for one DP slave ⑪. The DP slave ⑪ is assigned locally CPU 319-3 PN/DP ① and is not visible on the Industrial Ethernet.

Additional information

You will find additional information about PROFINET in the documents listed below:

- In the System Description PROFINET (http://support.automation.siemens.com/WW/view/en/19292127)
- In the *From PROFIBUS DP to PROFINET IO programming manual.* This manual also provides a clear overview of the new PROFINET blocks and system status lists.

4.11.4 Routed network transitions

Example: Programming device access beyond network limits (routing)

A CPU with several interfaces can also serve as a router for intercommunication with different subnets. With a PG you can access all modules on local and remote networks.

Requirements:

- Implement STEP 7 starting with Version 5.0.
  Note: For STEP 7 requirements with respect to the CPUs used, refer to the technical specifications.
- Assign the PG/PC to a network in your STEP 7 project (SIMATIC Manager, assigning a PG/PC).
- The various networks are interconnected using modules with routing functions.
- After you configured all networks in NETPRO, initiated a new compilation for all stations, and then download the configuration to all modules with routing function. This also applies to all changes made in the network.

  All routers therefore know all paths to a destination station.

Access to remote networks

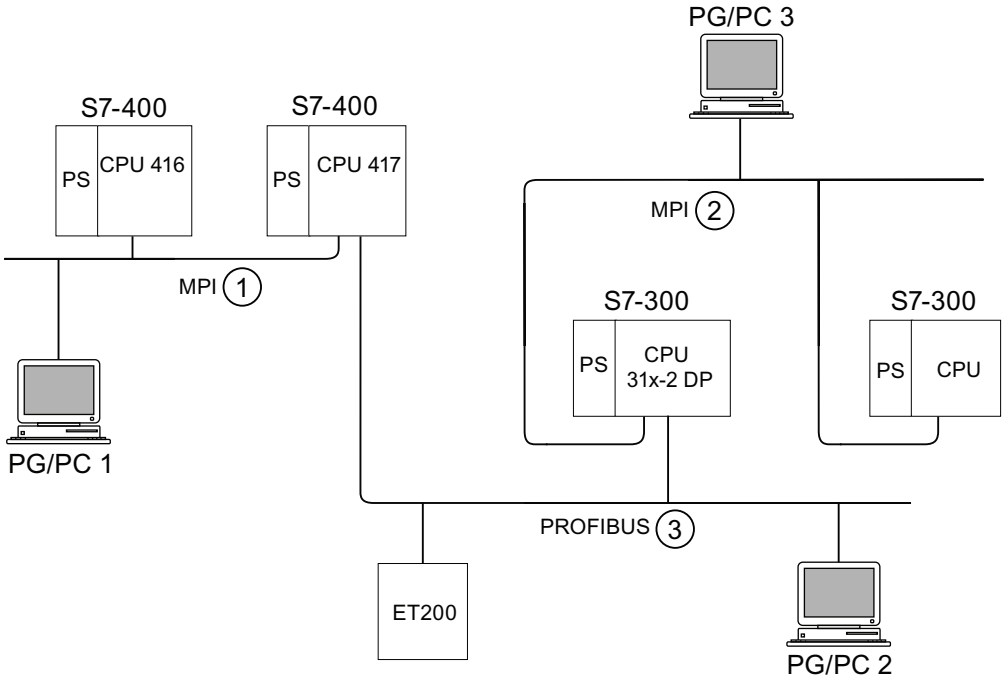

Figure 4-8 Access to remote networks

Example 1

To access the CPU 31x-2 DP using PG/PC 1:

PG/PC 1 - MPI network ① - CPU 417 as router - PROFIBUS network ③ - CPU 31x-2 DP

Example 2

To access the the S7-300 CPU (on the right in the figure) using PG/PC 2:

PG/PC 2 - PROFIBUS network ③ - CPU 31x-2 DP as router - MPI network ② - S7-300 CPU

Example 3

To access the 416 CPU using PG/PC 3:

PG/PC 3 - MPI network ② - CPU 31x-2 DP as router - PROFIBUS network ③ - CPU 417 as router - MPI network ① - CPU 416

Note

Only for CPUs with DP interface:

If these CPUs are operated as I-slaves and you want to use routing functionality, set the Commissioning / Debug Mode / Routing check box in the DP Interface for DP Slave dialog box in STEP 7.

Reference

You can find more information on the subject of routing in the "*Communication with SIMATIC*" manual.

4.11.5 Point-to-point (PtP)

Availability

CPUs with the "PtP" name suffix have at least one PtP interface.

Properties

Using the PtP interface of your CPU, you can connect external devices with serial interface. You can operate such a system at transmission rates up to 19.2 kbps in full duplex mode (RS 422), and up to 38.4 kbps in half duplex mode (RS 485).

Baud rate

- Half duplex: 38,4 kbps
- Full duplex: 19,2 kbps

Drivers

PtP communication drivers installed in those CPUs:

- ASCII drivers
- 3964(R) Protocol
- RK 512 (CPU 314C-2 PtP only)

Devices capable of PtP communication

Devices equipped with a serial port, for example, barcode readers, printers, etc.

Reference

CPU 31xC: Technological functions manual

4.11.6 Actuator/sensor interface (ASI)

Actuator/Sensor Interface (ASI)

Implementation using communication processors (CP).

The ASI, or Actuator/Sensor Interface, represents a subnet system on the lowest process level for automation systems. It is designed especially for networking digital sensors and actuators. The maximum data volume is 4 bit per slave station.

S7-300 CPUs require communication processor for the ASI connection.

Installing 5

5.1 Installing an S7-300

Here we will explain the steps required for the mechanical assembly of an S7-300.

Note

Note the installation guidelines and notes on safety in this manual when mounting, commissioning and operating S7-300 systems.

Open components

S7-300 modules are "Open Components" according to IEC 61131-2 and an "open type" according to UL/CSA Approval.

In order to conform with specifications on safe operation relating to mechanical strength, inflammability, stability and touch-protection, the following alternative installation modes are prescribed:

- Installation in a suitable cubicle
- Installation in a suitable cabinet
- Installation in an appropriately equipped and closed operating area

Access to these areas must only be possible with a key or tool. Only trained or authorized personnel are allowed access to these cubicles, cabinets or electrical operating rooms.

Accessories included

Installation accessories are included with the module package. The appendix contains a list of accessories and spare parts together with the corresponding order numbers.

Table 5- 1 Module accessories

Module	Accessories included	Explanation
CPU	1 x Slot number label	For assigning slot numbers
	Inscription labels	for the MPI address and Firmware Version (all CPUs) for labeling of integrated inputs and outputs (CPU 31xC only)
Signal module (SM) Function Module (FM)	1 Bus connector	For electrical interconnection of modules
	1 Labeling strip	For labeling module I/O
Communication module (CP)	1 Bus connector	For electrical interconnection of modules
	1 Inscription label (only CP 342-2)	For labeling the AS interface connector
Interface module (IM)	1 Bus connector	For electrical interconnection of modules
	1 x Slot number label (only IM 361 and IM 365)	For assigning slot numbers on racks 1 to 3

Tip: Templates for the labeling strips are available on the Internet (http://support.automation.siemens.com/WW/view/en/11978022).

Tools and materials required

To install the S7-300, you require the tools and materials listed in the table below.

Table 5- 2 Installation tools and materials

You require ...	for ...
cutting the 2 m rail to length	commonly available tool
scribing and drilling holes on the 2 meter rail	commonly available tool, 6.5 mm diameter drill bit
screw-mounting the rail	wrench or screwdriver, matching the selected fixing screws diverse M6 screws (length depends on the place of installation) with nuts and spring lock washers
screw-fastening the modules on the rail	screwdriver with 3.5 mm blade width (cylindrical design)
pulling out the grounding slide contact to achieve ungrounded state	screwdriver with 3.5 mm blade width (cylindrical design)

5.2 Installing the mounting rail

Mounting rail versions available

- Ready-to-use, four standard lengths (with 4 holes for fixing screws and 1 ground conductor bolt)
- One meter mounting rail
  May be shortened to any special length. Supplied without holes for fixing screws and without ground conductor bolt.

Requirement

Prepare the 2 m mounting rail for installation.

Preparing the 2 m mounting rail for installation

1. Cut the 2 m mounting rail to the required length.
2. Mark out:
   – four bores for the fixing screws
     (for dimensions, refer to "Dimensions for fixing holes")
   – one hole for the protective conductor bolt.
3. If the length of your rail exceeds 830 mm, you must stabilize it by providing additional holes for fixing it with more screws.

   Mark out these holes along the groove in the middle section of the rail (see the Figure below). The pitch should be approx. 500 mm.
4. Drill the marked holes with a diameter of 6.5 $^{+0.2}$mm for M6 screws.
5. Mount an M6 bolt for fixing the ground conductor.

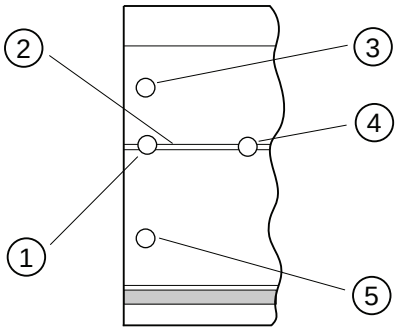

Number	Description
①	Hole for the ground conductor bolt
②	Groove for drilling additional holes for mounting screws
③	Hole for the mounting screw
④	Additional hole for mounting screw
⑤	Hole for the mounting screw

Dimension of the mounting holes

The mounting hole dimensions for the mounting rail are shown in the table below.

Table 5- 3 Mounting holes for rails

"Standard" mounting rail			2 m mounting rail
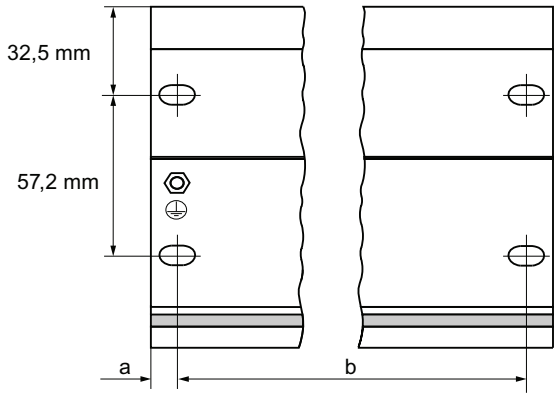			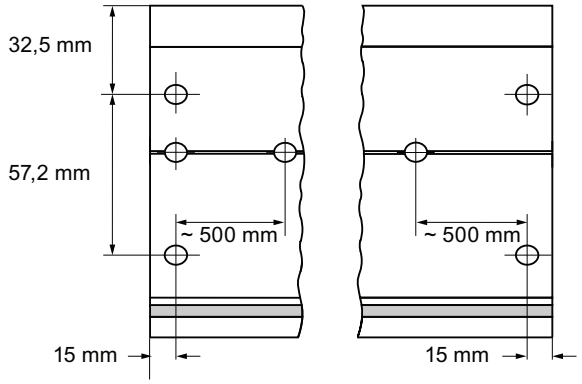
Length of rail	Dimension a	Dimension b	–
160 mm	10 mm	140 mm	
482.6 mm	8.3 mm	466 mm	
530 mm	15 mm	500 mm	
830 mm	15 mm	800 mm	

Fixing screws

You can use the following screw types for mounting the rails:

For ...	you can use ...	Explanation
outer fixing screws	Cylindrical head screw M6 to ISO 1207/ISO 1580 (DIN 84/DIN 85)	Choose a suitable screw length for your assembly. You also need size 6.4 washers to ISO 7092 (DIN 433)
	M6 hexagonal head screw to ISO 4017 (DIN 4017)	
Additional fixing screws (only 2 meter mounting rail)	Cylindrical head screw M6 to ISO 1207/ISO 1580 (DIN 84/DIN 85)	

Installing the mounting rail

1. Install the mounting rails so that sufficient space is available for installing modules and to allow heat dissipation (clearance of at least 40 mm above and below the modules. See the figure below).
2. Mark up the mounting holes on the mounting surface. Drill the holes with a diameter of $6.5^{+0.2}$ mm.
3. Screw the rail (M6 screws) onto the mounting surface.

Note

Always make sure of a low-impedance contact between the rail and a mounting surface, if the latter is a grounded metal panel or equipment mounting panel. On varnished or anodized metals, for instance, use a suitable contacting agent or contact washers.

The figure below shows the clearance required for the installation of an S7-300.

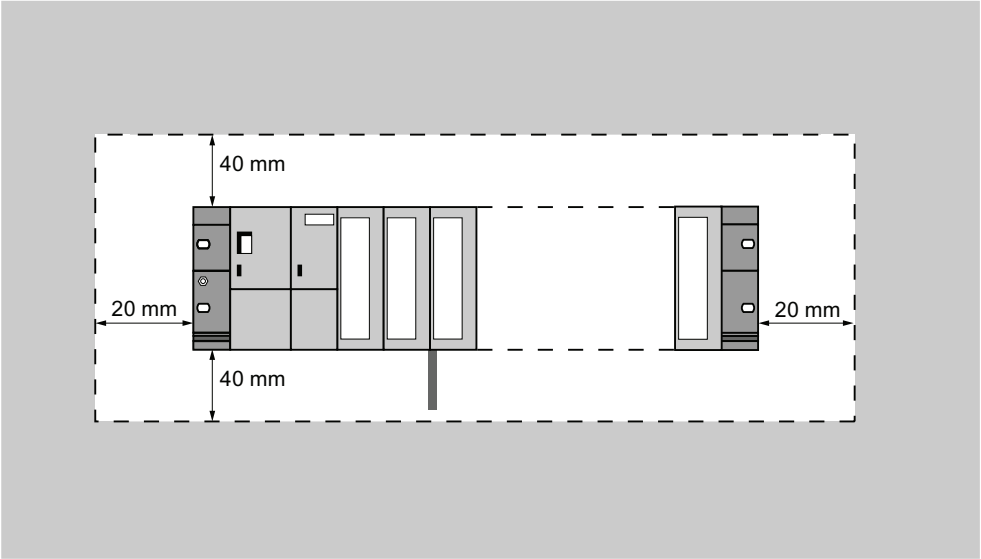

5.3 Installing modules on the mounting rail

Rules governing

The table below shows you points to follow when wiring, installing or removing S7-300 modules.

Rules for the tightening torque of..	... power supply, CPU,SM, FM, CP
Fixing modules to the mounting rail	from 0.8 Nm to 1.1 Nm

Requirements for module installation

- The configuration of the automation system is completed.
- The mounting rail is installed.

Mounting order of the modules

Hang the modules onto the rail, starting at the left and in the following order:

1. Power supply module
2. CPU
3. SMs, FMs, CPs, IMs

Note

Please check **before** you insert any SM 331 analog input modules whether you have to reposition the measuring range submodules at the side of the module. For more information, see the "Analog modules" chapter in the *Module Data* Manual.

Note

When installing an S7-300 system with ungrounded reference potential, make the relevant settings on the CPU. You ideally do so before you mount any modules onto the rail.

Installation steps

The various steps in module installation are explained below.

1.	Plug the bus connectors into the CPU and signal/function/communication/ interface modules. Each of these modules comes with a bus connector, except for the CPU. • Always start at the CPU when you plug in the bus connectors. Remove the bus connector from the "last" module of the assembly. • Plug the bus connectors into the other modules. The "last" module does not receive a bus connector.	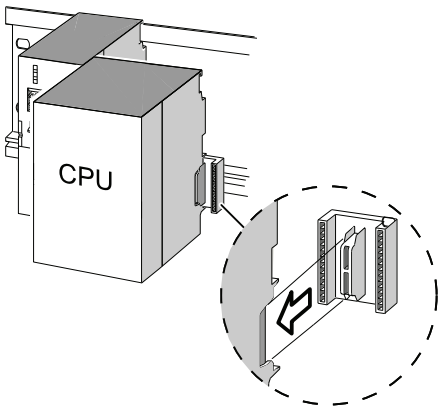
2.	Add all modules to the rail in the specified order ①, slide them up to the module on the left ②, then swing them down ③.	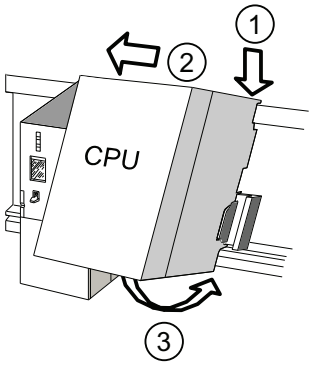
3.	Screw-tighten the modules.	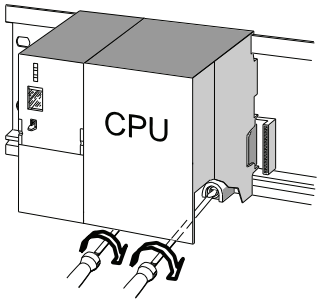

See also

Installing an S7-300 with ungrounded reference potential (not CPU 31xC) (Page 45)

5.4 Labeling modules

Assign slot numbers

You should assign a slot number to each one of the mounted modules, thus making it easier to assign the modules in the configuration table in STEP 7. The table below shows the slot number assignment.

Table 5- 4 Slot numbers for S7 modules

Slot numbes	Module	Remark
1	Power supply (PS) module	–
2	CPU	–
3	Interface module (IM)	to the right of the CPU
4	1. Signal module (SM)	to the right of the CPU or IM
5	2. Signal module	–
6	3. Signal module	–
7	4. Signal module	–
8	5. Signal module	–
9	6. Signal module	–
10	7. Signal module	–
11	8. Signal module	–

Attach the slot numbers to the modules.

1. Hold the corresponding slot number in front of the relevant module.
2. Place the tongue in the opening on the module ①.
3. Press the slot number into the module ②. The slot number breaks off from the wheel.

The figure below illustrates this procedure. The slot number labels are included with the CPU.

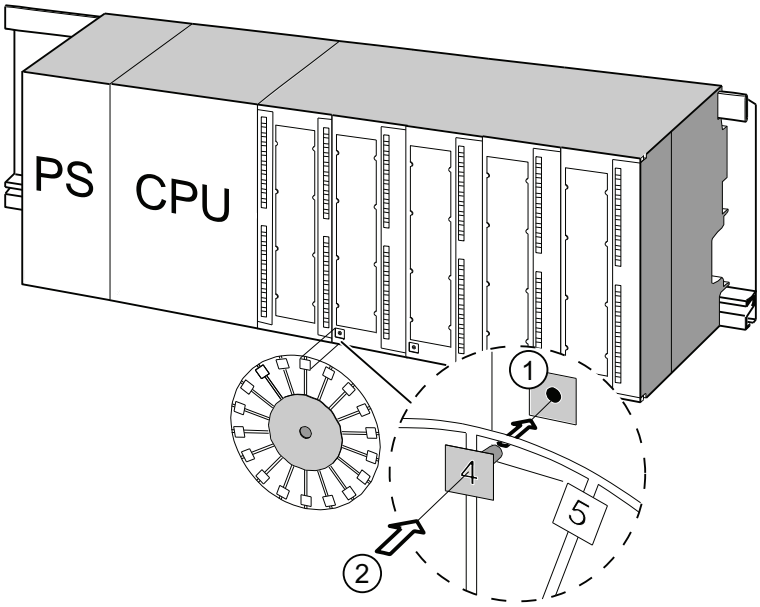

Wiring 6

6.1 Requirements for wiring the S7-300

This chapter

describes the requirements for wiring the power supply, CPU and front connectors.

Accessories required

The following accessories are required for wiring the S7-300.

Table 6- 1 Wiring accessories

Accessories	Explanation
Front connectors	for connecting the sensors / actuators of the system to the S7-300
Labeling strips	for labeling the module I/Os
Shield connection element, shielding terminals (matching the shielding diameter)	for connecting cable shielding

Tools and material required

Tools and materials required for wiring the S7-300.

Table 6- 2 Tools and material for wiring

To ...	you need ...
Connect the protective conductor to the rail	Wrench (size 10) Protective conductor cable (cross-section $\geq$ 10 mm^2) with M6 cable lug M6 nut, washer, spring lock washer
Adjust the power supply module to mains voltage	Screwdriver with a blade width of 4.5 mm
Wire the power supply module and the CPU	Screwdriver with a 3.5-mm blade, side-cutters, stripping tool Flexible cable, for example, sheathed flexible cable 3 x 1.5 mm^2 Wire end ferrules to DIN 46228
Wire the front connector	Screwdriver with a 3.5-mm blade, side-cutters, stripping tool Flexible cables, 0.25 mm^2 to 0.75/1.5 mm^2 Shielded cables as required Wire end ferrules to DIN 46228

Wiring conditions for power supply and CPU

Table 6- 3 Wiring conditions for power supply and CPU

Connectable cables	to power supply and CPU
Solid conductors	No
Flexible conductors • without wire end ferrule • With wire end ferrule	 0.25 mm^2 to 2.5 mm^2 0.25 mm^2 to 1.5 mm^2
Number of conductors per terminal	1 or 2, up to 1.5 mm^2 (total) in a common wire end ferrule
Diameter of the conductor insulation	max. 3.8 mm
Stripped length	11 mm
Wire end ferrules to DIN 46228 • without insulating collar • with insulating collar	 Design A, 10 mm to 12 mm length Design E, up to 12 mm length
Tightening torque	from 0.5 Nm to 0.8 Nm

Wiring conditions for front connectors

Table 6- 4 Wiring conditions for front connectors

Connectable cables	Front connectors	
	20-pole	40-pole
Solid conductors	No	No
Flexible conductors • without wire end ferrule • with wire end ferrule	 0.25 mm^2 to 1.5 mm^2 0.25 mm^2 to 1.5 mm^2	 0.25 mm^2 to 0.75 mm^2 0.25 mm^2 to 0.75 mm^2 • Mains feed 1.5 mm^2
Number of conductors per terminal	1 or 2, up to 1.5 mm^2 (total) in a common wire end ferrule	1 or 2, up to 0.75 mm^2 (total) in a common wire end ferrule
Diameter of the conductor insulation	max. 3.1 mm	• max. 2.0 mm for 40-pole cables • max. 3.1 mm for 20-pole cables
Stripped length	6 mm	6 mm
Wire end ferrules to DIN 46228 • without insulating collar • with insulating collar	 Design A, 5 mm to 7 mm length Design E, up to 6 mm length	 Design A, 5 mm to 7 mm length Design E, up to 6 mm length
Tightening torque	from 0.4 Nm to 0.8 Nm	

6.2 Bonding the Protective Conductor to the Mounting Rail

Requirement

The mounting rail is fixed onto the mounting surface.

Connecting the protective conductor

Connect the mounting rail to the protective conductor.
The mounting rail is provided with a M6 protective conductor screw for this purpose.

Minimum cross-section of the protective conductor: 10 mm^2

The figure below shows how the protective conductor has to be bonded to the rail.

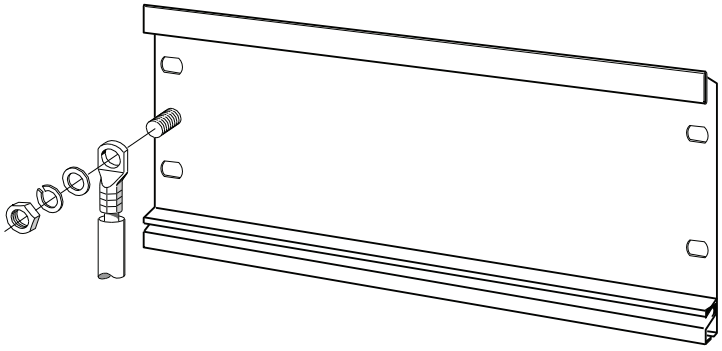

Note

Always make sure of a low-impedance contact between the protective conductor and the rail. You can achieve this by using a low-impedance cable, keeping it as short as possible and contacting it to a large surface.
For example, an S7-300 mounted on a hinged frame must be connected to ground using a flexible grounding strap.

6.3 Adjusting the power supply module to local mains voltage

Introduction

You can operate the S7-300 power supply module on 120 VAC or 230 VAC.

On older power supply modules PS307 with **selectable** input voltage range, the mains voltage is always set at the factory to the default 230 V.

Note

On the new S7-300 power supplies PS307, the input voltage range is selected **automatically**.

The MLFBs of the new power supply modules:

- PS307 2 A, 6ES7307-1BA01-0AA0
- PS307 5 A, 6ES7307-1EA01-0AA0
- PS307 10 A, 6ES7307-1KA02-0AA0

Setting the mains voltage selector switch

Verify that the setting of the voltage selector switch matches your local mains voltage.

To set the selector switch:

1. Remove the protective cap with a screwdriver.
2. Set the selector switch to match the local line voltage.
3. Reinsert the protective cap.

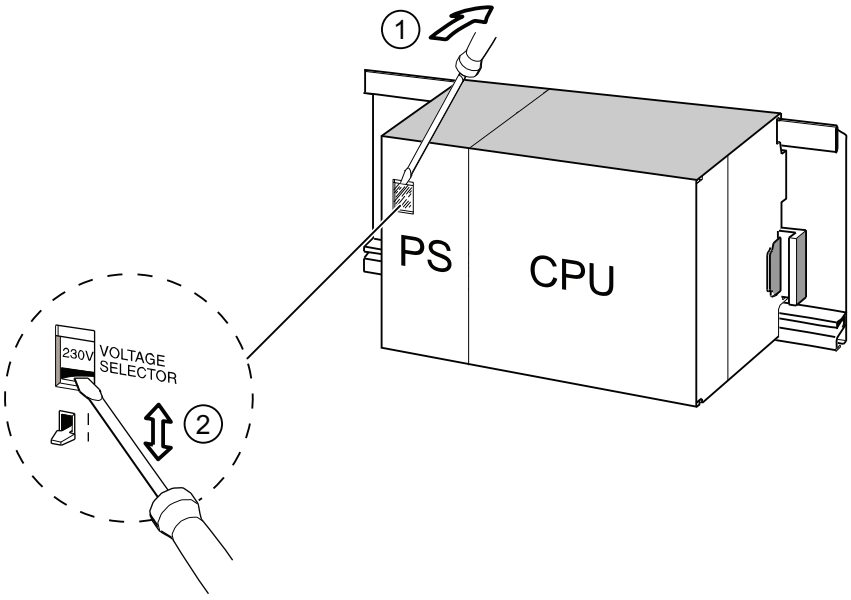

Numeral	Designation
①	Remove the protective cap with a screwdriver
②	Set selector switch to mains voltage

6.4 Wiring the power supply module and the CPU

Requirement

All modules are mounted onto the rail.

Wiring the PS and CPU

Note

The PS 307 power supply module is equipped with two additional 24 VDC terminals L+ and M for the supply of I/O modules.

Note

The power supply connector of your CPU is a plug-in device and can be removed.

WARNING

There is a risk of contact to live wires if the power supply module, or any additional load power supply units, are connected to the mains.

You should therefore isolate the S7-300 from power before you start wiring it. Always use crimp ferrules with insulating collars for the conductors. Close all front panels of the modules when you have completed the wiring. This is conditional before you reconnect the S7-300 to power.

1. Open the PS 307 power supply module and CPU front panels.
2. Open the strain relief on the PS 307.
3. Strip the power cable to a length of 11 mm and connect it to L1, N and to the protective earth (PE) terminal of the PS 307.
4. Screw-tighten the strain relief again.
5. Next, wire the PS and CPU

   The power supply connector of the CPUs is a removable plug-in device.

   Strip the connecting cables for the CPU power supply to a length of 11 mm. Wire the lower terminal M on the PS 307 to the terminal M of the CPU and the lower terminal L+ on the PS 307 to terminal L+ of the CPU.

   WARNING

   Reversing the polarity of the M and L+ terminals trips the internal fuse on your CPU. Always interconnect the M and L+ terminals of the power supply module and of the CPU.

6. Close the front panels.

The figure below illustrates the procedures described earlier.

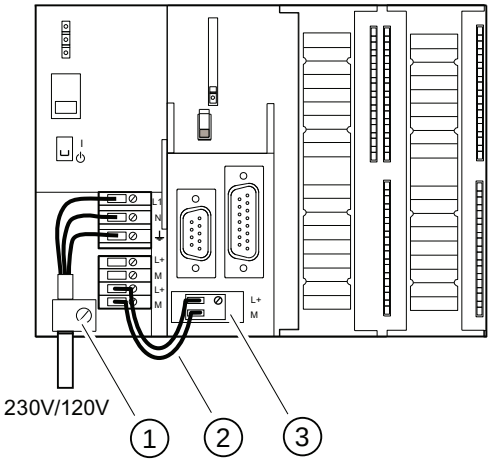

Numeral	Designation
①	Strain relief of the power supply cable
②	Connection cables between the PS and CPU
③	Removable power supply connector

Note

The PS 307 power supply module is equipped with two additional 24 VDC terminals L+ and M for the supply of I/O modules.

6.5 Wiring front connectors

Introduction

The sensors and actuators of your system are connected to the S7-300 AS by means of front connectors. Wire the sensors and actuators to the front connector and then plug it into the module

Front connector versions

Front connectors come in 20-pin and 40-pin versions with screw contacts or spring terminals. You require 40-pin front connectors for the CPUs 31xC and 32-channel SMs.

Use the following front connectors as required for the module:

Table 6- 5 Assignment of front connectors to modules

Module	Front connector with screw terminals, order no.:	Front connector with spring terminals, order no.:
Signal modules (not 32-channel), Function modules, Communication module CP 342-2	6ES7392-1AJ00-0AA0	6ES7392-1BJ00-0AA0
Signal modules (32-channel) and CPU 31xC	6ES7392-1AM00-0AA0	6ES7392-1BM01-0AA0

Connecting on spring terminals

It is quite easy to wire a front connector with spring terminals: Simply insert the screwdriver vertically into the opening with the red opening mechanism, insert the wire into the terminal and remove the screwdriver.

WARNING

You might damage the spring clamp mechanism of the front connector if you turn the screwdriver sideways or use the wrong size of screwdriver. Always slide a matching screwdriver vertically into the desired opening until it reaches the mechanical stop. This ensures that the spring terminal is fully open.

Tip

There is a separate opening for test probes up to 2 mm in diameter to the left of the opening for the screwdriver.

Requirement

The modules (SM, FM, CP 342-2) are mounted on the rail.

Preparing the front connectors and cables

WARNING

There is a risk of contact to live wires if the power supply module, or any additional load power supply units, are connected to the mains.

You should therefore isolate the S7-300 from power before you start wiring it. Close all front panels of the modules when you have completed the wiring. This is conditional before you reconnect the S7-300 to power.

1. Switch off the power supply.
2. Open the front door.
3. Place the front connector into wiring position.

   Push the front connector into the signal module until it latches. In this position, the front connector still protrudes from the module.

   Advantage of this wiring position: Convenient wiring.
   The front connector has no contact with the module in this wiring position.
4. Strip the conductors to a length of 6 mm.
5. Crimp the wire end ferrules, for example, to terminate two conductors at one terminal.

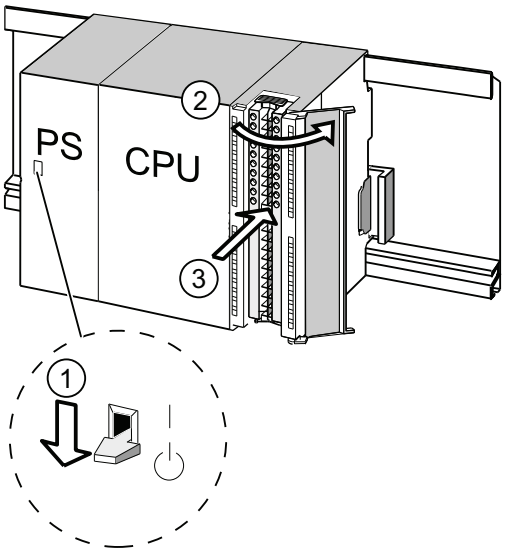

Numeral	Designation
①	Power supply (PS) turned off
②	Open module
③	Front connector in wiring position

Wiring front connectors

Table 6- 6 Wiring front connectors

Step	20-pin front connector	40-pin front connector
1.	Place the included cable strain relief into the front connector.	–
2.	Cable exit at the bottom of the module?	
	If yes: Starting at terminal 20, work your way down to terminal 1.	Start wiring at terminal 40 or 20, and work in alternating passes from terminals 39, 19, 38, 18 etc. until you have reached terminals 21 and 1.
	If not: Start wiring at terminal 1, and work your way up to terminal 20.	Start wiring at terminal 1 or 21, and work in alternating passes from terminals 2, 22, 3, 23 etc. until you have reached terminals 20 and 40.
3.	**Front connectors with screw terminals:** Always screw-tighten the unused terminals.	
4.	–	Place the strain relief around the cable harness and the front connector.
5.	Tighten the strain relief for the cable harness. Push in the strain relief to the left to increase cable space.	
	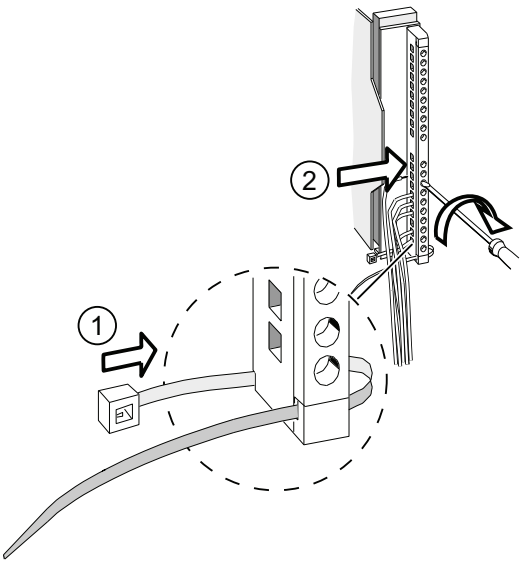	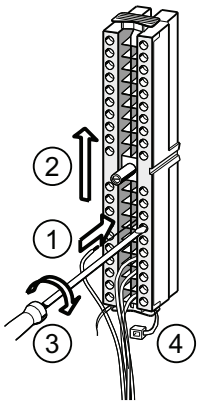
	The work step numbers are shown in the figure above	
	① Insert the strain relief. ② Wire the terminals.	① to ③ Wire the terminals. ④ Tighten the strain relief clamp.

Reference

For information on wiring the integrated I/O of 31xC CPUs, refer to the *CPU 31xC and CPU 31x, Technical Data* manual.

6.6 Plugging the front connectors into modules

Requirement

The front connectors are completely wired.

Inserting the front connector

Table 6- 7 Inserting the front connector

Step	20pin front connector	40pin front connector
1.	Push in the unlocking mechanism on top of the module. Keeping the locking mechanism pressed, insert the front connector into the module. Provided the front connector is seated correctly in the module, the unlocking mechanism automatically returns to the initial position when you release it.	Tighten the mounting screw in the center of the connector. This pulls the front connector completely into contact with the module.
	Note When you insert the front connector into the module, an encoding mechanism engages in the front connector, thus ensuring that the connector can only be inserted into modules of the same type.	
2.	Close the front panel.	Close the front panel.
	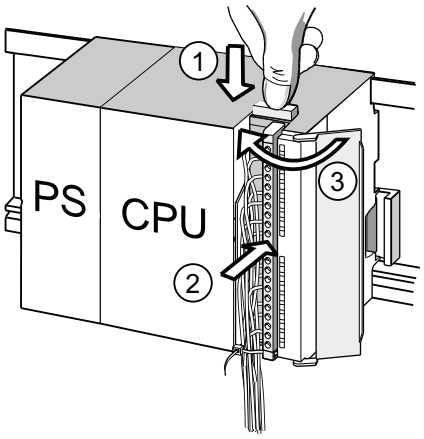	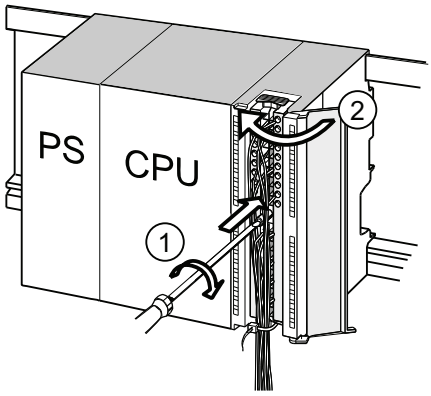
	The work step numbers are shown in the figure above	
	① Keep the release mechanism pressed ② Insert the front connector ③ Only then close the front panel.	① Tighten the mounting screw, ② Only then close the front panel.

6.7 Wiring I/O modules and compact CPUs with Fast Connect

Order numbers for Fast Connect Connectors

- 20-pin connector: 6ES7392-1CJ00-0AA0
- 40-pin connector: 6ES7392-1CM00-0AA0

Wiring I/O modules and compact CPUs with Fast Connect

- I/O modules and compact CPUs can be wired with Fast Connect. The individual wires are connected by means of the front connector using Fast Connect technology, which requires no stripping.
- Fast Connect is a connection method that requires no conductor preparation (i.e., the conductor insulation does not have to be stripped).
- Each terminal with Fast Connect has a test opening (e.g. for measuring the voltage). The test opening is suitable for test probes with a maximum diameter of 1.5 mm.
- Wire end ferrules are not permitted.

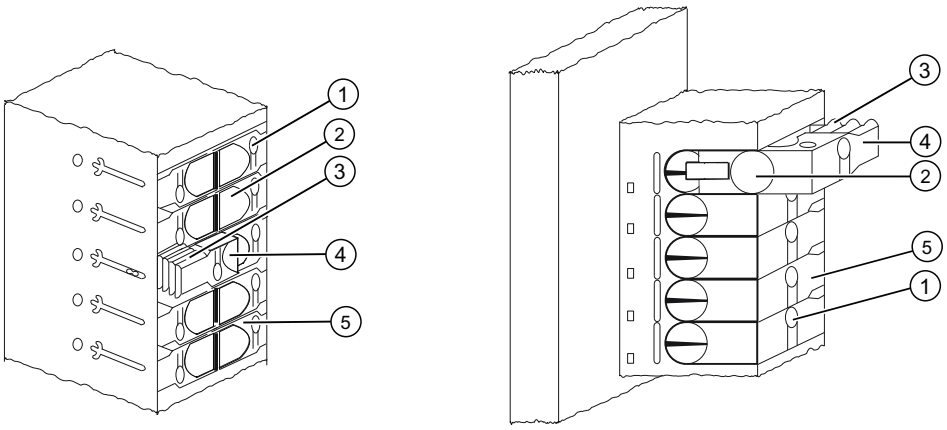

Numeral	Designation
①	Opening for testing: max. Ø 1.5 mm
②	Opening for a conductor: 0.25 mm^2 to 1.5 mm^2
③	Toothing for opening the terminal
④	Guide clip opened (the wire can be inserted)
⑤	Guide clip closed (the wire is connected)

Figure 6-1 Schematic representation of Fast Connect connectors

Wiring rules for front connector with Fast Connect

	20-pin front connector	40-pin front connector
Solid wires	No	No
Connectable wire cross-section of flexible wires		
• Without wire end ferrule	0.25 mm^2 to 1.5 mm^2	0.25 mm^2 to 1.5 mm^2
• With wire end ferrule	-	-
Number of wires per terminal	1	1
Number of terminating cycles for the same conductor cross-section	25 [1]	25 [1]
Maximum external diameter of the wire insulation	∅ 3.0 mm	∅ 3.0 mm
[1] For 1.5 mm^2 only 10 terminating cycles are possible. If different conductor cross-sections are used in a connecting terminal as a result of rewiring, it can be wired a maximum of 10 times.		

Required tools

Screwdriver, 3.0 mm or 3.5 mm.

Connectable cables

- Flexible conductors with PVC insulation and a conductor cross-section of: 0.25 mm^2 to 1.5 mm^2

A list of the tested conductors can be found at: `http://www.weidmueller .de`

UL-compliant cables and connections

Wiring range for insulating piercing connection 22 -16 AWG solid/stranded PVC insulated conductors, UL style no. 1015 only.

Procedure for wiring with Fast Connect

1. Insert the unstripped wire into the round opening until it stops **(the insulation and conductor must form a flat surface)** and secure the conductor in this position.
   - For 20-pin connector: at a 90° angle
   - For 40-pin connector: at a 45° angle
2. Insert the screwdriver into the indentation on the topside of the guide clip.
3. Press the screw driver downwards until the guide clip is engaged in the end position. The wire is connected.

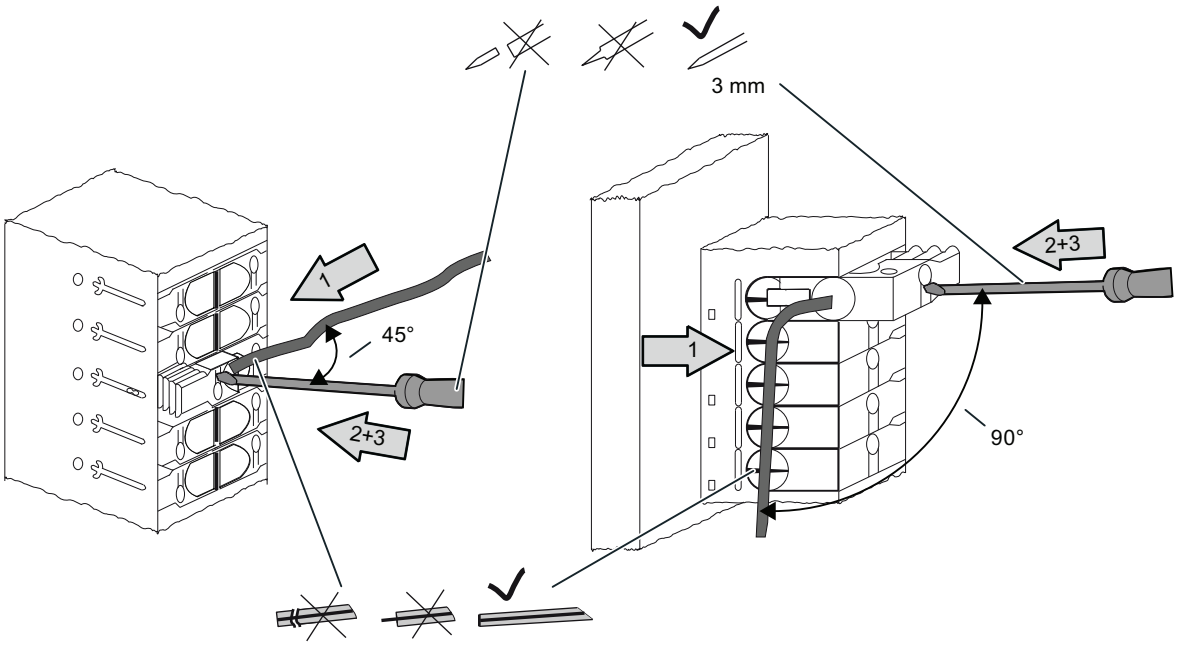

Note

If you would like to reuse a conductor after it was already connected once then it must be trimmed beforehand.

Procedure for disconnecting the wiring with Fast Connect

1. Insert the screwdriver into the opening next to the guide clip until it stops.
2. Using the screwdriver, apply upward leverage to the guide clip by means of the appropriate toothing.
   Repeat this action until the guide clip is engaged in the top position.
3. The wiring is disconnected. Remove the wire.

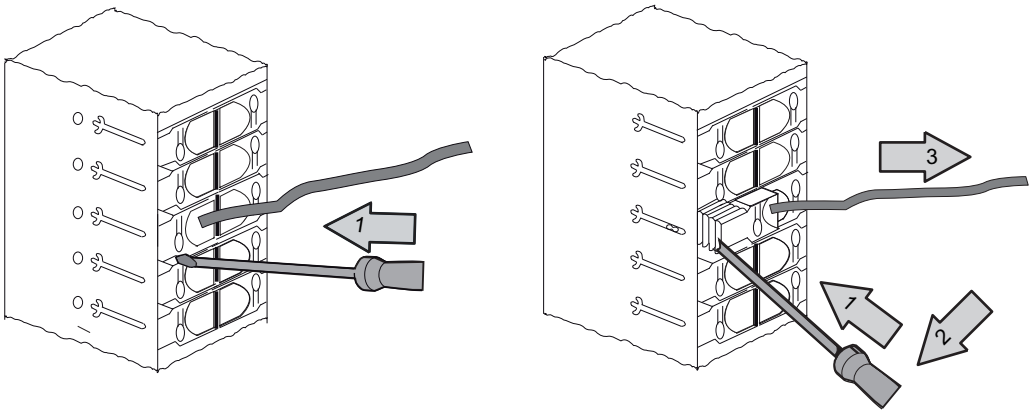

Figure 6-2 Disconnecting the wiring of a 40-pin Fast Connect connector

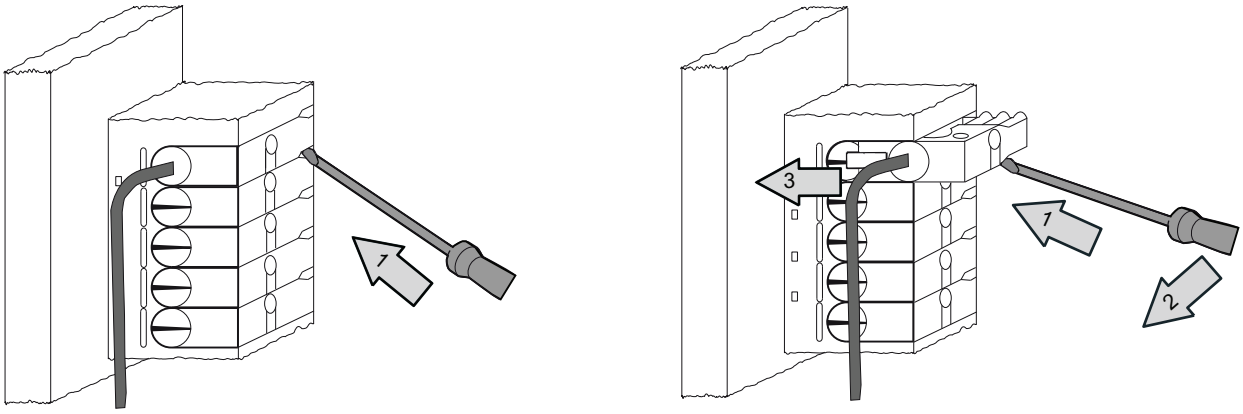

Figure 6-3 Disconnecting the wiring of a 20-pin Fast Connect connector

6.8 Labeling the module I/Os

Introduction

The labeling strips are used to document the assignment of module I/Os to the sensors / actuators of your system.

You have to use the following labeling strips, depending on the module:

Table 6- 8 Assignment of labeling strips to modules

Module	Labeling strip order no.:
SMs (not 32-channel), Function modules, Communication module CP 342-2	6ES7392-2XX00-0AA0
SMs (32-channel)	6ES7392-2XX10-0AA0

Filling out and inserting labeling strips

1. Label the strips with the addresses of the sensors / actuators.
2. Slide the labeled strips into the front panel.

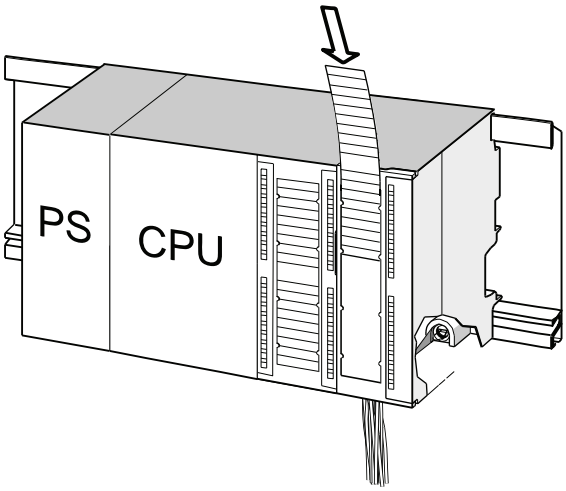

Tip

Templates for the labeling strips are available on the Internet under Internet (http://support.automation.siemens.com/WW/view/en/11978022).

6.9 Terminating shielded cables on the shield connection element

Application

The shield connection element allows easy grounding of all shielded cables of S7 modules, due to its direct contact to the mounting rail.

Design of the shield connection element

The shield connection element consists of

- a bracket with two screw bolts for rail mounting (order no.: 6ES7390-5AA00-0AA0) as well as
- the shielding terminals.

You must use the following shielding terminals, based on the shielding diameter of your cables:

Table 6- 9 Shielding diameter assignment to shielding terminals

Cable with shielding diameter	Shielding terminal order no.:
2 cables, each with shielding diameter of 2 mm to 6 mm	6ES7390-5AB00-0AA0
1 cable, shielding diameter 3 mm to 8 mm	6ES7390-5BA00-0AA0
1 cable, shielding diameter 4 mm to 13 mm	6ES7390-5CA00-0AA0

The shield connection element is 80 mm wide and provides space for 4 shielding terminals each in two rows.

Installing the shield connection element underneath two signal modules

1. Push the two screw bolts of the bracket into the guide on the underside of the mounting rail.
2. Place the bracket underneath the modules whose shielded cables are to be terminated.
3. Screw-tighten the bracket onto the rail.
4. The shielding terminal is equipped with a slotted web underneath. Place the shielding terminal at this position onto the edge of the bracket (see figure below). Push the shielding terminal down and pivot it into the desired position.

   You can install a maximum of 4 shielding terminals on each of the two rows of the shield connection element.

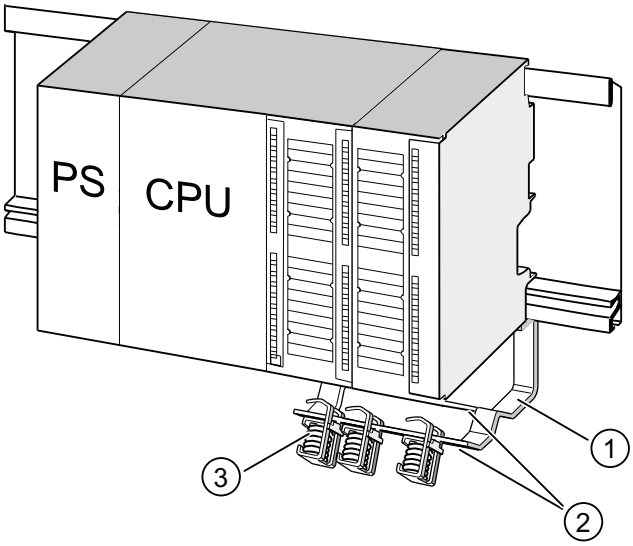

Number	Designation
①	Bracket of shield connection element
②	Edge of the bracket where the shielding terminal(s) has/have to be placed
③	Shielding terminals

Terminating 2-wire cables on shield connection elements

Only one or two shielded cables may be terminated per shielding terminal (see the figure below). The cable is clamped down at the stripped cable shielding.

1. Strip the cable shielding to a length of at least 20 mm.
2. Clamp in the stripped cable shielding underneath the shielding terminal.

   Push the shielding terminal towards the module ① and feed the cable through the clamp opening ②.

   If you need more than four shielding terminals, start wiring at the rear row of the shield connection element.

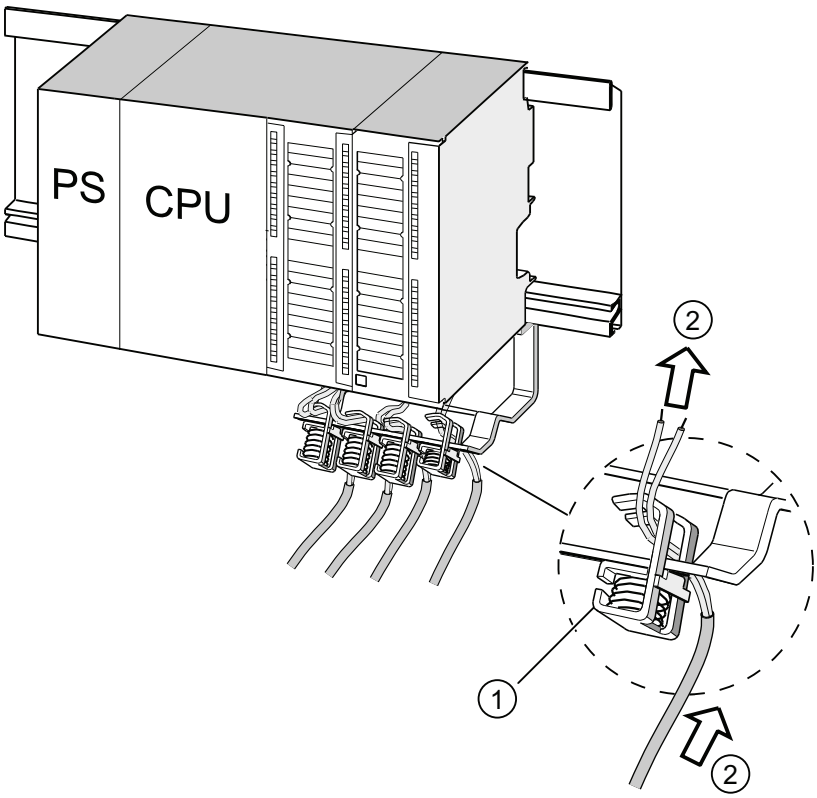

Number	Designation
①	Magnified view of the shielding terminal
②	Wiring of the shielding terminal

Tip

Provide a sufficient cable length between the shielding terminal and the front connector. This allows you to disconnect the front connector for repairs, without having to disconnect the shielding terminal also, for example.

See also

Cable shielding (Page 272)

6.10 Wiring bus connectors

You need to network all the nodes you integrate into a subnet of your system. The section below provides information about the wiring of the bus connectors.

6.10.1 MPI/PROFIBUS bus connector

Wiring a bus connector with screw terminals

1. Strip the bus cable.

   For information about stripped lengths, refer to the product information included with the bus connector.
2. Open the bus connector housing.
3. Insert the green and the red wire into the screw-terminal block.

   Always ensure that you connect the same wires to the same terminal (for example., green wire to terminal A, red wire to terminal B).
4. Press the cable sheath into the clamp. Make sure that the cable shield directly contacts the shielding contact surfaces.
5. Screw-tighten the wire terminals.
6. Close the bus connector housing.

Wiring a Fast Connect bus connector

1. Strip the bus cable.

   For information about stripped lengths, refer to the product information included with the bus connector.
2. Open the strain relief of the bus connector.
3. Insert the green and red wire into the open contacting covers.

   Always ensure that you connect the same wires to the same terminal (for example., green wire to terminal A, red wire to terminal B).
4. Close the contacting cover.

   This presses the conductors into the insulation displacement terminals.
5. Screw-tighten the strain relief clamp. Make sure that the cable shield directly contacts the shielding contact surfaces.

Note

Use a bus connector with 90° cable outlet.

See also

Network components of MPI/DP and cable lengths (Page 63)

6.10.2 Setting up the terminating resistor on the PROFIBUS connector

Inserting a bus connector in a module

1. Connect the wired bus connector to the module.
2. Screw the bus connector tightly onto the module.
3. If the bus connector is installed on the beginning or end of a segment, enable the terminating resistor (switch position "ON"; see the picture below).

Note

The bus connector 6ES7972-0BA30-0XA0 does not come with a terminating resistor. You cannot insert this type of bus connector at the beginning or end of a segment.

Please make sure during startup and normal operation that power is always supplied to nodes where the terminating resistor is active.

The figure below shows the switch settings of a bus connector:

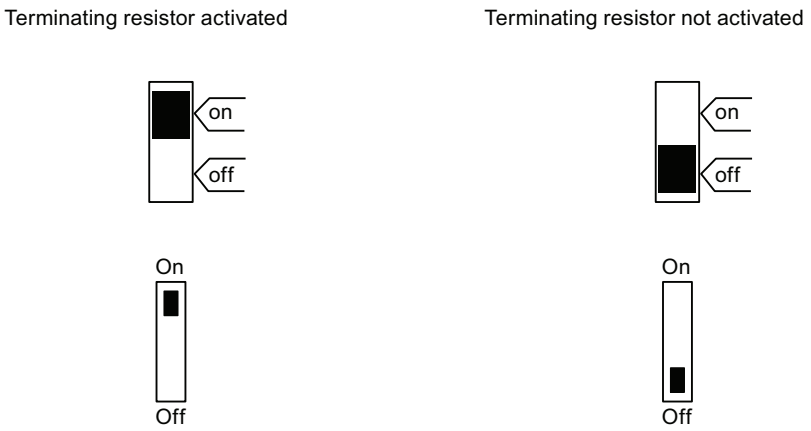

Removing the fiber-optic cable

You can unplug a bus connector with a looped-through bus cable at any time from the PROFIBUS DP interface without interrupting data exchange on the bus.

Possible data traffic errors

WARNING

Data traffic error might occur on the bus!
A bus segment must always be terminated at both ends with the terminating resistor. For example, this is not the case when the last slave with the bus connector is deactivated. Because the bus connector takes its voltage from the station, this terminating resistor is ineffective. Please make sure that power is always supplied to stations on which the terminating resistor is active.

6.10.3 PROFINET bus connector

Wiring a Fast Connect bus connector

Devices are usually connected to the PROFINET interrface by means of RJ45 connector.

For an overview of the product range and applications of the RJ45 connector, refer to chapter "PROFINET cable length and network dimensions (Page 85)"

When wiring the RJ45 connector by yourself, refer to the comprehensive installation instructions included. These instructions are also available on the Internet (http://support.automation.siemens.com/WW/view/en/20691879).

Special features for unlocking

In confined installation conditions, use a screwdriver with a 2.5 mm blade to unlock the connector.

Addressing 7

7.1 Slot-specific addressing of modules

Preface

For slot-specific addressing (default addressing mode if you have not yet downloaded any configuration data to the CPU), every slot number is assigned a module start address. This is a digital or analog address, based on the type of module.

This section shows you which module start address is assigned to which slot number. You need this information to determine the start addresses of the installed modules.

Maximum assembly and the corresponding module start addresses

The picture below shows the layout of an S7-300 on 4 racks, including the available slots and their module start addresses.

The input and output addresses for I/O modules begin at the same module start address.

Note

On a CPU 31xC system you cannot insert any modules into slot 11 of rack 3. The address range is reserved for the integrated I/O.

The figure below shows the slots of an S7-300 and the corresponding module start addresses:

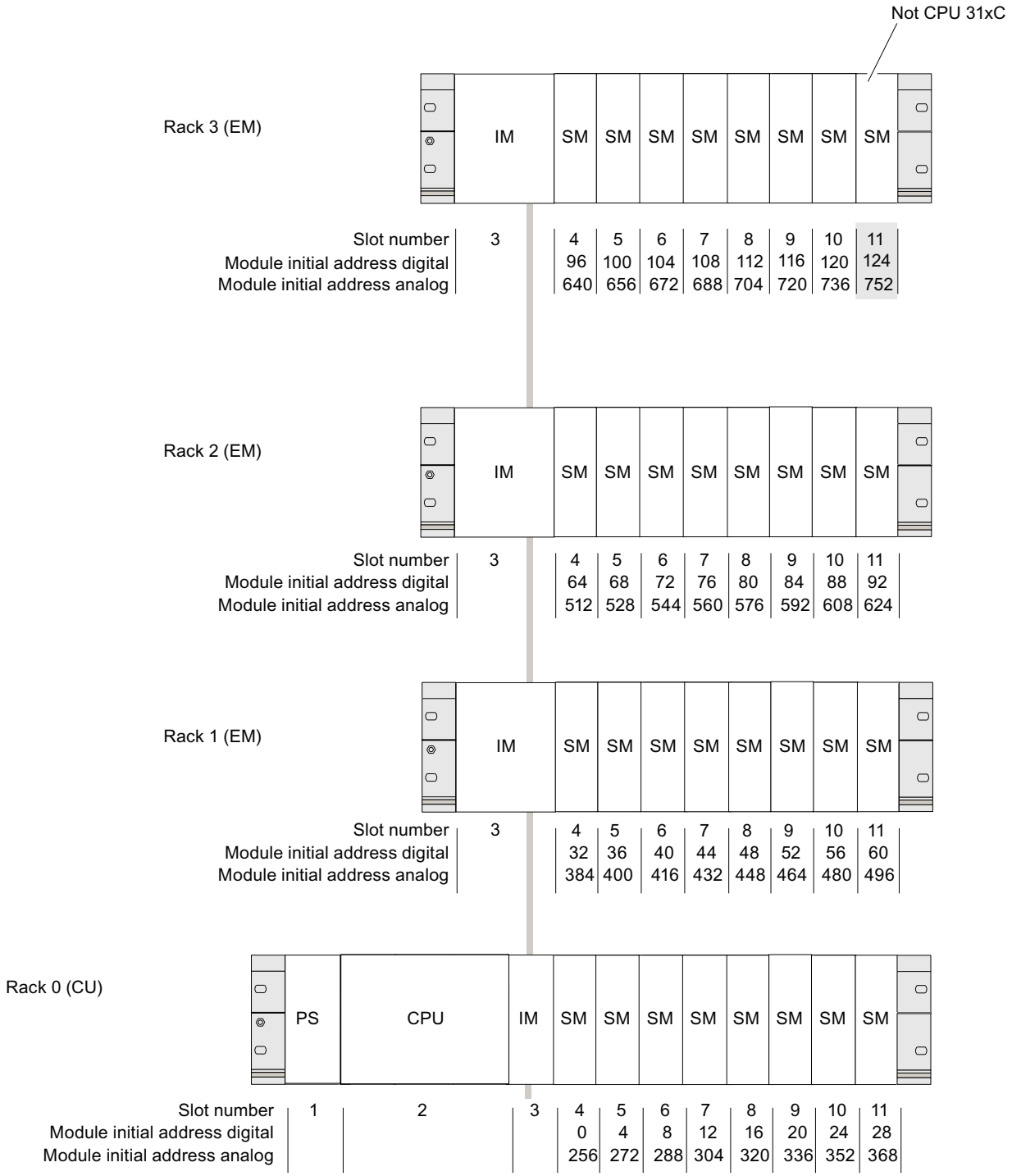

7.2 User-specific addressing of modules

7.2.1 User-specific addressing of modules

User-specific addressing

User-specific addressing means that you can assign an address of your choice to any module (SM/FM/CP). The addresses are assigned in STEP 7. There you specify the module start address that forms the basis for all other addresses of the module.

Advantages in user-specific addressing:

- Optimization of available address space as there are no "address gaps" between the modules.
- In your standard software configuration, you can define addresses which are independent of the relevant S7-300 configuration.

Note

You always configure the hardware in HW Config of STEP 7 when using PROFIBUS DP or PROFINET IO field devices. User-specific addressing is automatically set in this case. There is no fixed slot addressing for such a configuration.

7.2.2 Addressing digital modules

This section describes how to assign addresses to digital modules. You need this information in order to be able to address the channels of the digital module in the user program.

Addresses of digital modules

The address of an input or output of a digital module consists of a byte address plus a bit address.

Example: I 1.2

The example consists of:

- input I,
- byte address 1 and
- bit address 2

The byte address is based on the module start address.

The bit address is the number printed on the module.

When the first digital module is located in slot 4, its default start address is 0. The start address of each further digital module increments by the count of 4.

The figure below shows you how the scheme by which the addresses of the various channels of a digital module are derived.

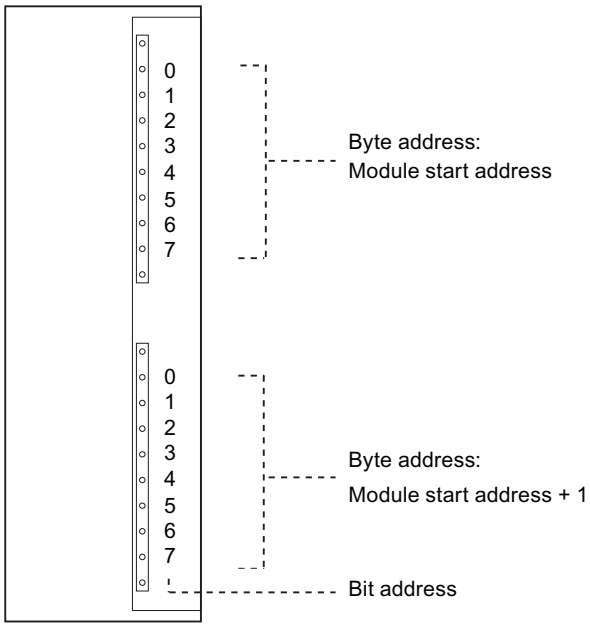

An example of digital modules

The example in the figure below shows which default addresses are derived when a digital module is located in slot 4 (that is, when the module start address is 0). Slot number 3 is not assigned, because the example does not contain an interface module.

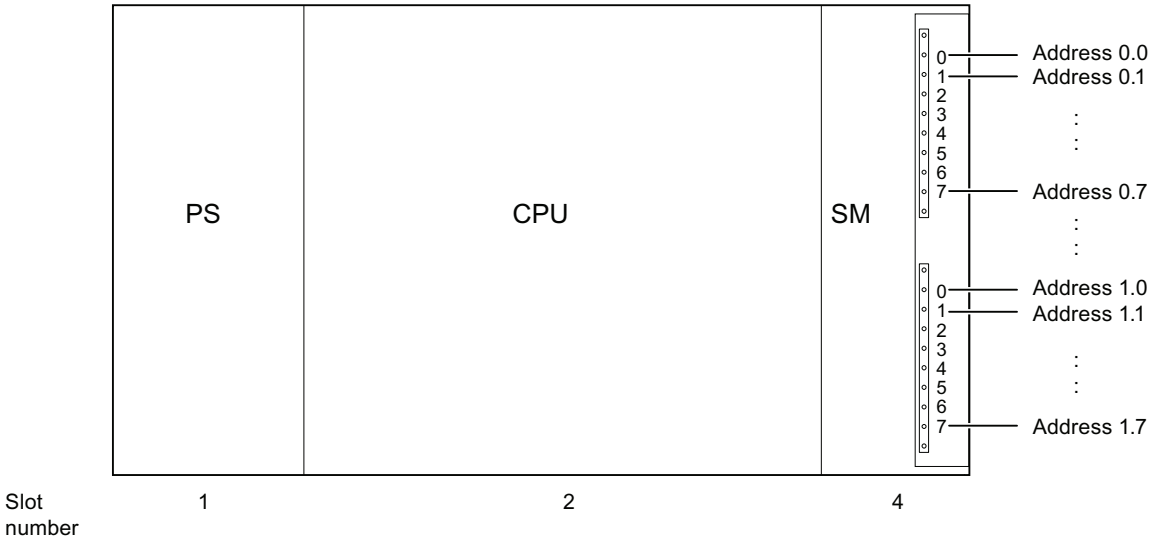

7.2.3 Addressing analog modules

This section describes how to address analog modules. You need this information in order to be able to address the channels of the analog modules in your user program.

Addresses of analog modules

The analog input or output channel is always assigned a word address. The channel address is based on the module start address. When the first analog is located in slot 4, its default start address is 256. The start address of each further analog module increments by the count of 16.

An analog I/O module has the same start addresses for its input and output channels.

An example of analog modules

The example in the figure below shows you which default channel addresses are derived for an analog module located at slot 4. You can see that all analog I/O channels of an analog I/O module are assigned the same start address, which is the module start address.

Slot number 3 is not assigned, because the example does not contain an interface module.

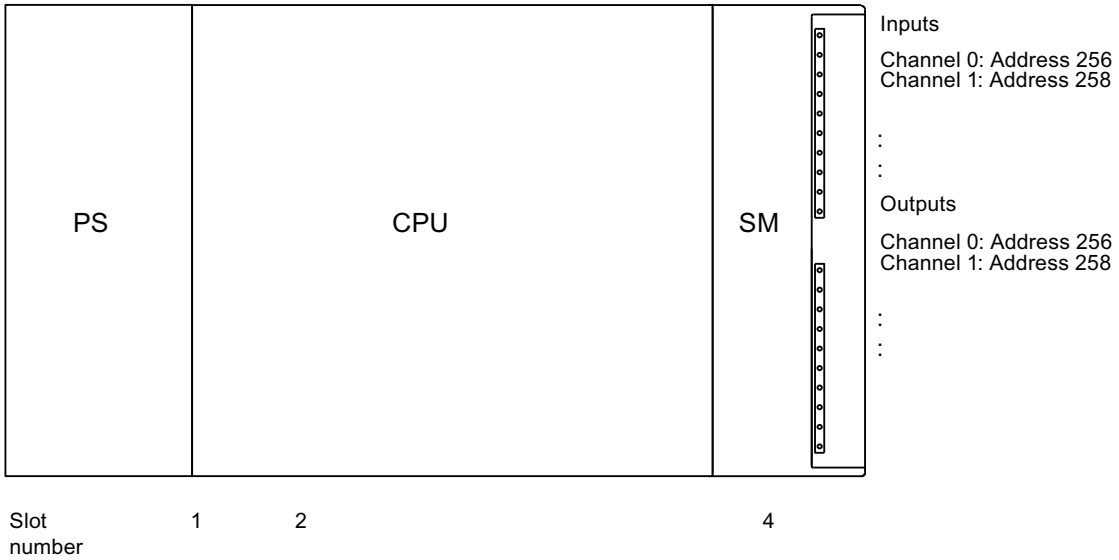

Figure 7-1 I/O addresses of an analog module at slot 4

7.2.4 Addressing the integrated I/Os of CPU 31xC

CPU 312C

The integrated inputs and outputs of this CPU have the following addresses:

Table 7- 1 Integrated I/Os of CPU 312C

Inputs / outputs	Default addresses	Comments
10 digital inputs	124.0 to 125.1 of which 8 Inputs are for technological functions: 124.0 to 124.7	All digital inputs can be assigned an interrupt function. Optional technological functions: • Counting • Frequency measurement • Pulse width modulation
6 digital outputs	124.0 to 124.5 of which 2 inputs are for technological functions: 124.0 to 124.1	

CPU 313C

Addresses of the integrated I/Os of this CPU:

Table 7- 2 Integrated I/Os of CPU 313C

Inputs / outputs	Default addresses	Comments
24 digital inputs	124.0 to 126.7 of which 12 inputs are for technological functions: 124.0 to 125.0 125.4 to 125.6	All digital inputs can be assigned an interrupt function. Optional technological functions: • Counting • Frequency measurement • Pulse width modulation
16 digital outputs	124.0 to 125.7 of which 3 inputs are for technological functions: 124.0 to 124.2	
4 + 1 analog inputs	752 to 761	
2 analog outputs	752 to 755	

CPU 313C-2 PtP and CPU 313C-2 DP

Addresses of the integrated I/Os of these CPUs:

Table 7- 3 Integrated I/Os of CPU 313C-2 PtP/DP

Inputs / outputs	Default addresses	Comments
16 digital inputs	124.0 to 125.7 of which 12 inputs are for technological functions: 124.0 to 125.0 125.4 to 125.6	All digital inputs can be assigned an interrupt function. Optional technological functions: • Counting • Frequency measurement • Pulse width modulation
16 digital outputs	124.0 to 125.7 of which 3 inputs are for technological functions: 124.0 to 124.2	

CPU 314C-2 PtP and CPU 314C-2 DP

Addresses of the integrated I/Os of these CPUs:

Table 7- 4 Integrated inputs/outputs of CPUs 314C-2 PtP and 314C-2 DP

Inputs / outputs	Default addresses	Comments
24 digital inputs	124.0 to 126.7 of which 16 inputs are for technological functions: 124.0 to 125.7	All digital inputs can be assigned an interrupt function. Optional technological functions: • Counting • Frequency measurement • Pulse width modulation • Positioning
16 digital outputs	124.0 to 125.7 of which 4 inputs are for technological functions: 124.0 to 124.3	
4 + 1 analog inputs	752 to 761	
2 analog outputs	752 to 755	

CPU 314C-2 PN/DP

The integrated inputs and outputs of this CPU have the following addresses:

Table 7- 5 Integrated inputs/outputs of the CPU 314C-2 PN/DP

Inputs/outputs	Default addresses	Comments
24 digital inputs	136.0 to 138.7 of which 16 Inputs are for technological functions: 136.0 to 137.7	All digital inputs can be assigned an interrupt function. Optional technological functions: • Counting • Frequency measurement • Pulse width modulation • Positioning
16 digital outputs	136.0 to 137.7 of which 4 inputs are for technological functions: 136.0 to 136.3	
4 + 1 analog inputs	800 to 809	
2 analog outputs	800 to 803	

Special features

You cannot influence outputs with transfer instructions if they are assigned to technological functions.

I/Os not configured for technological functions can be used as standard I/Os.

7.3 Addressing on PROFIBUS DP

Overview

The corresponding DP slaves must be commissioned for operation on PROFIBUS DP in order to enable addressing of distributed I/O in the user program.

This commissioning includes

- the assignment of PROFIBUS addresses to DP slaves
- the assignment of address ranges to the input/output modules or the slots in order to enable their addressing in the user program. the assignment of a diagnostic address to slots which do not contain user data.

This applies likewise when the CPU is operated as DP slave.

For more information about the commissioning of the CPUs as DP master or DP slave, refer to chapter: Commissioning PROFIBUS DP (Page 166).

User-specific addressing of distributed PROFIBUS IO

Distributed PROFIBUS DP IO requires user-specific addressing.

For more information, refer to chapter: User-specific addressing of modules (Page 129).

Addressing consistent user data areas

The table below shows items to be taken into consideration in terms of communication in a PROFIBUS DP master system when transferring I/O areas with "Total length" consistency.

Rule for 1 to 32 bytes data consistency on PROFIBUS DP:
The address range of consistent data in the process image is updated automatically. You can also use SFC14 "DPRD_DAT" and SFC15 "DPWR_DAT" to read and write consistent data. SFC14 and SFC15 are required to read and write consistent data of address ranges which are not available in the process image. The length of areas with "Total length" consistency accessed by the SFC must match the programmed range. Direct access to consistent areas is also possible (L PEW or T PAW, for example). PROFIBUS DP supports the transfer of up to 32 bytes of consistent data.

7.4 Addressing PROFINET IO

Overview

The corresponding I/O devices must be commissioned for operation on PROFINET in order to enable addressing of distributed peripherals on PROFINET IO in the user program.

This commissioning includes

- the assignment of address ranges to the input/output modules or the slots/subslots in order to enable their addressing in the user program. the assignment of a diagnostic address to slots which do not contain user data.
- The definition of device numbers and names for the IO devices
- the definition of I/O device names in order to enable the assignment of IP addresses and access to the IO devices by the CPU 31x PN/DP operated as IO controller.

Note

Naming IO devices after "Device replacement without removable medium"

If the functionality "Device replacement without removable medium" is configured in HW Config, IO devices can be replaced without the user having to assign a name. To do so, the IO device has to be reset to the state of delivery by using "Reset to factory setting".

Note

Use different method to obtain IP address parameters/device names (PROFINET CPUs)

- IP address parameters/device name via DCP:
  IP address parameters/device name are assigned by means of DCP (**D**iscovery and **C**onfiguration **P**rotocol). This can be achieved in two ways:
  - using a setup tool such as PST or STEP 7, for example, via "Edit Ethernet node"
  - using the higher-level controller, provided the CPU is operated as an I device.
- IP address parameters/device name via user program:
  The IP address parameters and/or device names are assigned in the user program of the CPU (using SFB 104)

For more information about the commissioning of the CPU as IO controller, refer to chapter Commissioning PROFINET IO (Page 180)

User-specific addressing of distributed PROFINET IO

Distributed peripherals on PROFINET IO require user-specific addressing.

For more information, refer to chapter User-specific addressing of modules (Page 129).

Addressing consistent user data areas

The table below shows items to be taken into consideration in terms of communication in a PROFINET IO system when transferring I/O areas with "Total length" consistency.

Rule for 1 to 1024 bytes data consistency on PROFINET IO:
The address range of consistent data in the process image is updated automatically. You can also use SFC14 "DPRD_DAT" and SFC15 "DPWR_DAT" to read and write consistent data. SFC14 and SFC15 are required to read and write consistent data of address ranges which are not available in the process image. The length of areas with "Total length" consistency accessed by the SFC must match the programmed range. Direct access to consistent areas is also possible (L PEW or T PAW, for example). PROFINET IO supports the transfer of up to 1024 bytes of consistent data.

7.5 Assigning IP address parameters and the device name

IP address parameters/device name

Similar to any other PROFINET device, the CPU (or its PROFINET interface) also needs the IP address parameters and device name for communication via PROFINET.

The IP address parameters consist of three sections:

- IP address
- Subnet mask
- Router address

Retentivity of IP address parameters and device names

The retentivity of IP address parameters and device names depends on the way it is assigned. The non-retentive, temporary assignment means that:

- IP address parameters and device names are valid until the next POWER OFF or memory reset. After POWER OFF/POWER ON or memory reset, the CPU can be reached at its MAC address only.
- Loading a temporary IP address also deletes non-retentive IP address parameters from memory.

Assigning IP address parameters and device names

The following methods are available for the assignment of IP address parameters and device names:

Assigning IP address parameters and device names		Retentivity
Default method: Permanent assignment in STEP 7	IP address parameters/device names are assigned permanently in the *STEP 7* configuration. The IP address parameters/device names are saved to retentive memory on the CPU along with the download of configuration data to the CPU.	Data is retentive: • on POWER OFF/ POWER ON • after memory reset • after the configuration data was deleted (SDBs) • after the MMC was removed
Permanent assignment with the settings "Use different method to obtain IP address parameters/ device names"	IP address parameters/device names are assigned by means of DCP (**D**iscovery and **C**onfiguration **P**rotocol): • Using a setup tool such as PST, or in *STEP 7* , for example, using the "Edit Ethernet nodes" function. • By the higher-level IO controller, provided the CPU is operated as intelligent device with prioritized power up.	
Temporary assignment in STEP 7	IP address parameters/device names are assigned by means of DCP (**D**iscovery and **C**onfiguration **P**rotocol): • For automatic IP address assignments via "Available nodes" in *STEP 7*, if the CPU does not yet have an IP address.	Data is **not** retentive
Temporary assignment with the setting "Use different method to obtain IP address parameters/ device names"	IP address parameters/device names are assigned by means of DCP (**D**iscovery and **C**onfiguration **P**rotocol): • If **not** operated with prioritized power up, an intelligent device is assigned the IP address by the higher-level controller.	
Assignment in the user program	IP address parameters/device names are assigned in the user program using SFB 104. The retentivity of IP address parameters/device names can be specified in a corresponding parameter data record.	Retentivity in accordance with specifications in the parameter data record

Resetting retentive IP address parameters and device names

Retentive IP address parameters and device names can be reset as follows:

- With "Reset to factory settings"
- With a firmware update

NOTICE
• The temporary assignment of IP address parameters/device names resets all retentive IP address parameters/device names in memory. • During the permanent assignment of IP address parameters/device names, the parameters previously saved to retentive memory will be replaced with the new parameters.

NOTICE
Reusing devices Always perform a "Reset to factory settings" before you install a device that contains retentive IP address parameters/device names in other subnets/systems, or before you put it on shelf.

Reference

For more information about IP address assignments for the intelligent device, refer to the PROFINET System Description (http://support.automation.siemens.com/WW/view/en/19292127).

Commissioning 8

8.1 Overview

This section contains important notes on commissioning which you should strictly observe in order to avoid injury or damage to machines.

Note

Your commissioning phase is determined primarily by your application, so we can only offer you general information, without claiming completeness of this topic.

Reference

Note the information about commissioning provided in the descriptions of your system components and devices.

8.2 Commissioning procedure

8.2.1 Procedure: Commissioning the hardware

Hardware requirements

- S7-300 is installed.
- S7-300 is wired.

Prepare the interfaces for a networked S7-300 as follows:

- MPI/ PROFIBUS
  - The MPI/PROFIBUS addresses are set.
  - The terminating resistors at the segment boundaries are enabled.
- PROFINET
  - The integrated PROFINET interface of CPU 31x PN/DP is configured in STEP 7 (IP address and device name are set, for example, in HW Config).
  - The CPU is connected to the subnet.

Recommended procedure: Hardware

The S7-300 system can be very large and extremely complex due to its modular structure and versatile expansion options. It is therefore inappropriate to initially start up an S7-300 with multiple racks and all inserted (installed) modules. Rather, we recommend a step-by-step commissioning procedure.

We recommend the following initial commissioning procedure for an S7-300:

Table 8- 1 Recommended commissioning procedure: Hardware

Tasks	Comments	Information can be found
An installation and wiring check according to checklist	-	*in the chapter: Checklist for commissioning*
Disconnecting drive aggregates and control elements	This prevents negative effects on your system as a result of program errors. Tip: By redirecting data from your outputs to a data block, you can always check the status at the outputs	-
Preparing the CPU	Connecting the PG	*in the chapter: Connecting the programming device (PG).*
Central unit (CU): commission the CPU and power supply, check the LEDs	Commission the CU with inserted power supply module and CPU. First, switch on the expansion devices (EMs) which are equipped with their own power supply module, and then switch on the power supply module of the CU.	*in the chapter: Initial power on*
	Check the LED displays on both modules.	*in the chapter: Debugging functions, diagnostics and troubleshooting*
Reset CPU memory and check the LEDs	-	*in the chapter: CPU memory reset by means of mode selector switch*
CU: commission the remaining modules	Insert additional modules into the CU and commission these, working successively.	in the *Module specifications* Manual
Expansion module (EM): Interconnect	Interconnect the CU with EMs as required: Insert only one send IM into the CU, and insert the matching receive IM into into the EM.	*in the chapter: Installation*
EM: Commissioning	Insert additional modules into the EMs and commission these, working in successively.	See above.

⚠ DANGER

Proceed step-by-step. Do not go to the next step unless you have completed the previous one without error/error message.

Reference

Important notes can also be found in the section *Debugging Functions, Diagnostics and Troubleshooting.*

See also

Procedure: Software commissioning (Page 143)

8.2.2 Procedure: Software commissioning

Requirements

- You must have installed and wired up your S7-300.
- You are using the current programming package of STEP 7 in order to utilize the complete functional scope of your CPU.
- In case of networking of the S7-300 with MPI or PROFIBUS
  - The MPI/PROFIBUS addresses are configured
  - You have switched on the terminating resistors at the segment borders.
- In case of networking of the S7-300 with PROFINET
  - The integrated PROFINET interface of CPU 31x PN/DP is configured in STEP 7 (IP address and device names are set in HW Config)
  - The CPU is connected to the subnet.

Note

Observe the procedure for commissioning the hardware.

Recommended procedure: Software

Table 8- 2 Recommended commissioning procedure - Part II: Software

Tasks	Comments	Information can be found...
• Switch on the PG and run SIMATIC Manager • Download the configuration and the program to the CPU	-	In the *STEP 7* Programming Manual
Debugging the I/Os	Helpful functions are here: • Monitoring and modifying variables • Testing with program status • Forcing • Controlling outputs in STOP mode (PO enable) **Tip:** Test the signals at the inputs and outputs. Use the simulation module SM 374, for example.	In the *STEP 7* Programming Manual *in the chapter: Debugging functions, diagnostics and troubleshooting*
Commissioning PROFIBUS DP or Ethernet	-	*in the chapter: Commissioning PROFIBUS DP* *in the chapter: Configuring PROFINET interface X2*
Commissioning PROFINET IO		in the *PROFINET System Description* System Manual
Connect the outputs	Commissioning the outputs successively.	-

⚠ DANGER

Proceed step-by-step. Do not go to the next step unless you have completed the previous one without error/error message.

Reaction to errors

React to errors as follows:

- Check the system with the help of the check list in the chapter below.
- Check the LED displays on all modules. For information on their meaning, refer to the chapters describing the relevant modules.
- If required, remove individual components to trace the error.

Reference

Important notes can also be found in the section *Debugging Functions, Diagnostics and Troubleshooting.*

See also

Procedure: Commissioning the hardware (Page 141)

8.3 Commissioning check list

Introduction

After you have installed and wired your S7-300, we advise you to check all previous steps once again.

The check list tables below are a guide for your examination of the S7-300. They also provide cross-references to chapters containing additional information on the relevant topic.

Racks

Points to be examined are in the manual	S7-300: Installation in chapter
Are the rails mounted firmly to the wall, in the frame or in the cabinet?	Configuring, Installation
Have you maintained the free space required?	Configuring, Installation
Are the cable ducts installed properly?	Configuring
Is the air circulation OK?	Installing

Concept of grounding and chassis ground

Points to be examined are in the manual	S7-300: Installation in chapter
Have you established a low-impedance connection (large surface, large contact area) to local ground?	Configuring, Appendix
Are all racks (rails) properly connected to reference potential and local ground (direct electrical connection or ungrounded operation)?	Configuring, Wiring, Appendix
Are all grounding points of electrically connected modules and of the load power supply units connected to reference potential?	Configuring, Appendix

Module installation and wiring

Points to be examined are in the manual	S7-300: Installation in chapter
Are all modules properly inserted and screwed in?	Installing
Are all front connectors properly wired, plugged, screw-tightened or latched to the correct module?	Installation, Wiring

Mains voltage

Points to be examined	S7-300: Installation in chapter	See manual; Section
Is the correct mains voltage set for all components?	Wiring	Module data

Power supply module

Points to be examined	S7-300: Installation in chapter	See manual; Section
Is the mains plug wired correctly?	Wiring	-
Is mains voltage connected?	-	-

8.4 Commissioning the Modules

8.4.1 Inserting/replacing a Micro Memory Card

SIMATIC Micro Memory Card (MMC) as memory module

The memory module used on your CPU is a SIMATIC Micro Memory Card. You can set up the SIMATIC Micro Memory Card as a load memory or a portable data medium.

Note

A SIMATIC Micro Memory Card must be inserted for CPU operation.

Note

The CPU goes into STOP and requests a memory reset when you remove the SIMATIC MMC while the CPU is in RUN state.

CAUTION

Data on a SIMATIC Micro Memory Card can be corrupted if you remove the card while it is being accessed by a write operation. You may then have to delete the SIMATIC Micro Memory Card on the PG or format it in the CPU.
DO NOT remove the SIMATIC Micro Memory Card when the system is in RUN mode; always shut down power or set the CPU to STOP mode when no PG write access is taking place. When the CPU is in STOP mode and you cannot not determine whether or not a PG is writing to the card (e.g. load/delete block), disconnect the communication lines.

WARNING

Make sure that the SIMATIC Micro Memory Card to be inserted contains a user program which is suitable for the CPU (system). The wrong user program may have fatal processing effects.

Inserting/replacing the SIMATIC Micro Memory Card

1. Switch the CPU to STOP mode.
2. Is a SIMATIC Micro Memory Card inserted?

   If yes, ensure that no write operations are running on the PG (such as loading a block). If you cannot ensure this state, disconnect all communication lines of the CPU.

   Press the ejector and remove the SIMATIC MMC.

   The frame of the module slot is equipped with an ejector for removing the SIMATIC MMC (see CPU 31xC and CPU 31x Manual, Technical Data, *Chapter CPU31x Operator Control and Display Elements*).

   You need a small screwdriver or ball-point pen to eject the SIMATIC Micro Memory Card.
3. Insert the ("new") SIMATIC MMC into the card slot with its beveled edge facing the ejector.
4. Carefully push the SIMATIC MMC into the CPU slot to engage the interlock.
5. Reset CPU memory *(see Resetting CPU memory by means of mode selector switch)*

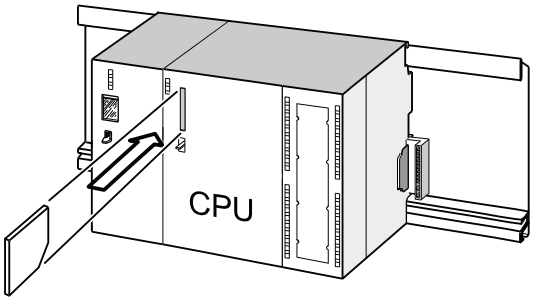

Inserting and removing a SIMATIC MMC when CPU power is switched off

After you replaced a SIMATIC MMC in POWER OFF state,
the CPUs

- automatically detect a physically identical SIMATIC MMC with changed content
- automatically detect a new MMC with contents to the previous SIMATIC MMC

It automatically performs a CPU memory reset after POWER ON.

Reference

- Chapter *Properties of the SIMATIC Micro Memory Card*, CPU 31xC and CPU 31x Manual, Technical data
- Chapter *Technical data of the SIMATIC Micro Memory Card (MMC)*, CPU 31xC and CPU 31x Manual, Technical data

8.4.2 Initial power on

Requirements

- You must have installed and wired up the S7-300.
- Insert the Micro Memory Card into the CPU.
- Your CPU's mode selector switch must be set to STOP.

Initial power on of a CPU with Micro Memory Card

Switch on the PS 307 power supply module.

Result:

- The 24 VDC LED is lit on the power supply module.
- On the CPU
  - the 5 VDC LED is lit.
  - The STOP LED flashes at 2 Hz while the CPU executes an automatic memory reset.
  - The STOP LED is lit after memory reset.

8.4.3 CPU memory reset by means of mode selector switch

When to reset CPU memory

You reset CPU memory

- in order to clear all retentive memory bits, timers and counters, and to initialize work memory with the start values of the retentive DBs in load memory.
- if the new retentive new memory bits, timers and counters downloaded to the CPU user program using the "Download user program to Memory Card" function are liable to cause unwanted reactions.

  Reason: the "Download user program to Memory Card" function does not delete any retentive memory areas.
- if the CPU requests a memory reset, indicated by the STOP LED flashing at 0.5 Hz intervals.

Table 8- 3 Possible reasons of a CPU request to reset memory

Causes of a CPU request to reset memory	Special features
The SIMATIC MMC has been replaced.	–
RAM error in CPU	–
Insufficient work memory for loading all user program blocks from a SIMATIC MMC.	CPU with inserted SIMATIC Micro Memory Card: Recursive request of a CPU memory reset.
Attempts to load faulty blocks; if a wrong instruction was programmed, for example.	For additional information on the behavior of the SIMATIC MMC during CPU memory reset, refer to the CPU 31xC and CPU 31x Manual, Technical data, *Memory Reset and Restart*

How to reset memory

There are two ways to reset CPU memory:

CPU memory reset using the mode selector switch	CPU memory reset using the PG
... is described in this chapter.	... is only possible when the CPU is in STOP mode (see *STEP 7 Online Help).*

Resetting CPU memory using the mode selector switch

The table below shows the steps in resetting CPU memory.

Table 8- 4 Procedure for CPU memory reset

Step	Reset CPU memory
1	Turn the key to STOP position ①.
2	Turn the key to MRES position. Hold the key in this position until the STOP LED lights up for the second time and remains on (this takes 3 seconds) ②. Now release the key.
3	You must turn the key to MRES position again within 3 seconds and hold it there until the STOP LED flashes (at 2 Hz) ③. You can now release the switch. When the CPU has completed memory reset, the STOP LED stops flashing and remains lit. The CPU has reset the memory.

The procedure described earlier is only required to reset CPU memory when the CPU has not requested (indicated by slow flashing of the STOP LED) a memory reset. If the CPU requests a memory reset you only have to briefly set the mode selector switch to the MRES position in order to initiate the memory reset.

The figure below shows how to use the mode selector switch to reset CPU memory:

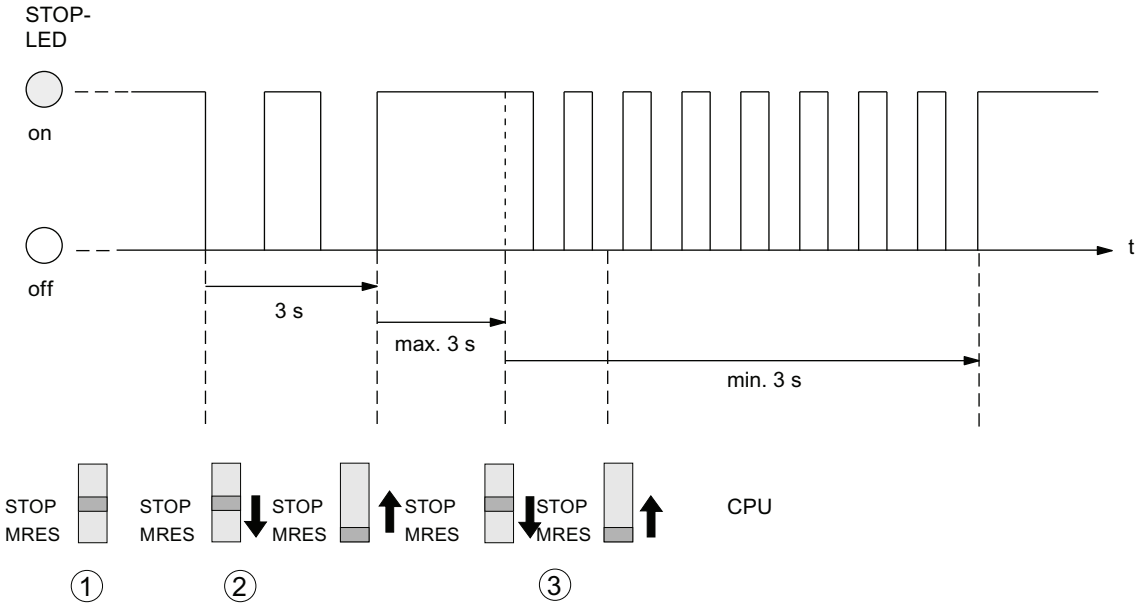

You may have to format the SIMATIC MMC if memory was successfully reset and the CPU once again requests a memory reset (*see Formatting the SIMATIC Micro Memory Card*).

STOP LED does not flash during the memory reset

What should I do if the STOP LED does not flash during the memory reset or if other LEDs are lit?

1. You must repeat steps ② and ③.
2. If the CPU still does not reset memory, evaluate the diagnostic buffer of the CPU.

What happens during a CPU memory reset?

Table 8- 5 Internal CPU events on memory reset

Event	Action in CPU	
CPU activities	1	The CPU deletes the entire user program in the main memory.
	2	The CPU erases the retentive user data (bit memories, times, counters and DB contents)
	3	The CPU tests its own hardware.
	4	The CPU copies the runtime-relevant content of the SIMATIC Micro Memory Card (load memory) to work memory. **Tip:** If the CPU is unable to copy the contents from the SIMATIC MMC and requests a memory reset: • Remove the SIMATIC Micro Memory Card. • Reset CPU memory. • Read the diagnostic buffer. If the IP address and device name were not retentive (depending on the assignment mode): Assign a temporary IP address to the CPU and then read out the diagnostic buffer, or determine the MAC address of the CPU in SIMATIC Manager under "Available nodes". If the Ethernet interface of the programming device is set to "TCP/IP (Auto)", you can also use this available MAC address to read the diagnostic buffer, because STEP 7 will then assign a temporary IP address.
Memory contents after reset	The user program is once again transferred from the SIMATIC MMC to work memory. Memory utilization is indicated accordingly.	
Data retained	• Data in the diagnostic buffer. After POWER OFF/POWER ON, only the last 100 entries in the diagnostic buffer are retentive. You can use the programming device to read the diagnostic buffer (see the *STEP 7 Online Help*).	
	• The MPI interface parameters (MPI address and highest MPI address, transmission rate, configured MPI addresses of CPs/FMs in an S7300). • The same applies to CPU 314C-2 PN/DP, CPU 315-2 PN/DP, CPU 317, CPU 319 if the MPI/DP interface of the CPU is programmed for operation as DP interface (PROFIBUS address, highest PROFIBUS address, baud rate, configured as active or passive interface).	
	• Parameters of the PROFINET interface: IP address parameters/device name (depending on the assignment mode, see chapter: Assigning IP address parameters and the device name (Page 137)).	
	The time.	
	Contents of run-time meter.	

Note

Communication shutdown during memory reset on PROFINET CPUs with integrated switch

Note that the PROFINET interface and the integrated switch are shut down when you reset memory on this CPU.

During the memory reset on a CPU configured within a line structure, communication via the CPU integrated switch to downstream devices is shut down.

After memory reset, the PROFINET interface is not restarted unless the interface parameters were saved to retentive memory.

The integrated switch is always restarted and can resume communication on completion of the CPU memory reset.

Special feature: Interface parameters

The following parameters hold a special position when CPU memory is reset.

- Parameters of an MPI or MPI/DP interface
- Parameters of a PROFINET interface

The table below describes which interface parameters are valid after a CPU memory reset.

CPU memory reset ...	PROFINET interface parameters ...	MPI/DP parameters ...
with inserted SIMATIC Micro Memory Card	... which are on the SIMATIC Micro Memory Card or integrated read-only load memory are valid.	
	If no parameters are stored (SDB), the previously set parameters remain valid, provided they were saved to retentive memory (depending on the assignment mode, see chapter: Assigning IP address parameters and the device name (Page 137))	If no parameters are stored (SDB), the previously set parameters remain valid (**not valid for an interface with DP function only**).
without inserted SIMATIC Micro Memory Card	... the previously set parameters remain valid, provided they were saved to retentive memory (depending on the assignment mode, see chapter: Assigning IP address parameters and the device name (Page 137))	... are retained and remain valid (**not valid for an interface with DP function only**).

8.4.4 Formatting the Micro Memory Card

Situations which require formatting of the SIMATIC Micro Memory Card:

- The SIMATIC Micro Memory Card module type is not a user module
- The SIMATIC Micro Memory Card is not formatted
- The SIMATIC Micro Memory Card is defective
- Invalid content of the SIMATIC Micro Memory Card

  The content of the SIMATIC Micro Memory Card has been marked invalid
- The "Download user program" operation was interrupted as a result of Power Off.
- The "Write to EPROM" operation was interrupted as a result of Power Off.
- Error when evaluating the module content during CPU memory reset.
- Formatting error, or formatting failed.

If one of these errors has occurred, the CPU prompts you for yet another memory reset, even after a memory reset operation has been performed. The contents of the SIMATIC MMC are retained until it is formatted, unless the "Download user program" or "Write to EPROM" operation was interrupted due to Power Off.

The SIMATIC Micro Memory Card is only formatted if a specific reason is given (see above). It is not formatted, for example, when the CPU requests a memory reset after module replacement. In this case, a switch to MRES triggers a normal memory reset for which the module content remains valid.

How to format your SIMATIC Micro Memory Card

If the CPU has requested a memory reset (STOP LED flashing slowly) you can format the SIMATIC MMC using the mode selector switch as described below:

1. Toggle the switch to the MRES position and hold it there until the STOP LED lights up and remains on (after approx. 9 seconds).
2. Within the next three seconds, release the switch and toggle it once again to MRES position. The STOP LED flashes to indicate that formatting is in progress.

Note

Always perform these steps within the specified time, for the SIMATIC Micro Memory Card will otherwise not be formatted and returns to memory reset status.

See also

CPU memory reset by means of mode selector switch (Page 150)

8.4.5 Connecting the programming device (PG)

8.4.5.1 Connect PG/PC to the integrated PROFINET interface of the CPU 31x PN/DP

Requirement

- CPU with integrated PROFINET interface (e.g., CPU 317-2 PN/DP)
- PG/PC with network card

Connect PG/PC to the integrated PROFINET interface of the CPU 31x PN/DP

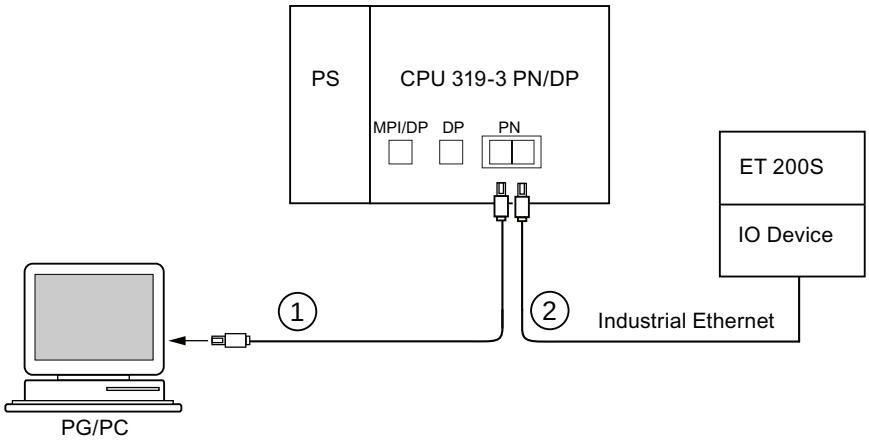

Number	Meaning
①	Using a preassembled twisted-pair cable, connect the programming device/PC to Port 1 of the PROFINET interface of the CPU.
②	Using a twisted-pair cable, connect the IO device to Port 2 of the PROFINET interface of the CPU.

Reference

- For information on PROFINET, refer to the *PROFINET System Description*.
- For information on passive network components, refer to the manual *SIMATIC NET: Twisted Pair and Fiber-Optic Networks.*

See also

Configuring the PROFINET IO system (Page 182)

8.4.5.2 Connecting the PG to a node

Requirement

The PG must be equipped with an integrated MPI interface or an MPI card in order to connect it via MPI.

Connecting a PG to the integrated MPI interface of the CPU

Interconnect the PG with the MPI interface of your CPU by way of a PG patch cable ①. You can use a self-made PROFIBUS bus cable with bus connectors. The figure below illustrates the connection between the PG and the CPU.

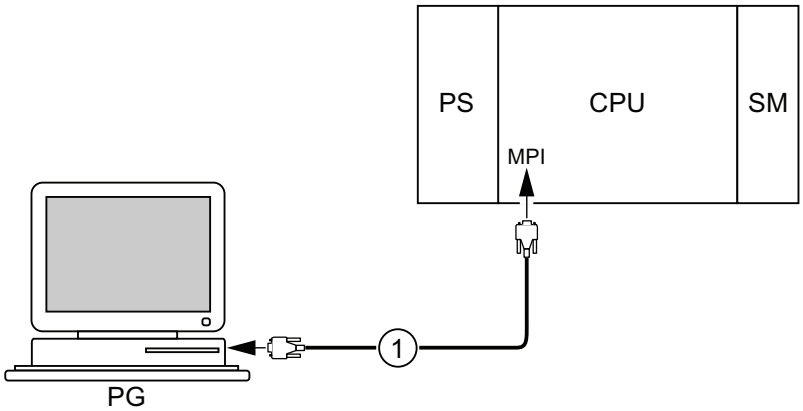

Number	Description
①	PG cable used to interconnect the PG with the CPU

Procedure for PROFIBUS DP

The procedure is basically the same for PROFIBUS DP, if the CPU interface is set to PROFIBUS DP mode.

8.4.5.3 Connecting the PG to several nodes

Requirement

The PG must be equipped with an integrated MPI interface or an MPI card in order to connect it to an MPI.

Connecting the PG to several nodes

Use bus connectors to connect a PG which is permanently installed on the MPI subnet to the other nodes of the MPI subnet.

The figure below shows two networked S7-300s which are interconnected by means of bus connectors.

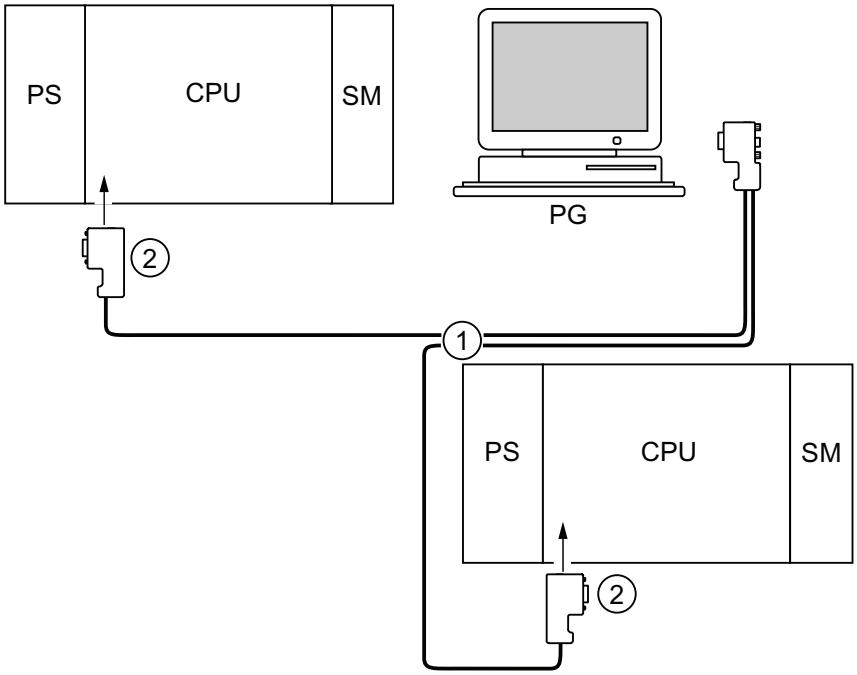

Number	Description
①	PROFIBUS bus cable
②	Connectors with enabled terminating resistors

8.4.5.4 Using the PG for commissioning or maintenance

Requirement

The PG must be equipped with an integrated MPI interface or an MPI card in order to connect it to an MPI.

Using the PG for commissioning or maintenance

Use a stub cable to connect the commissioning and maintenance PG to the other subnet nodes. The bus connector of these nodes must be equipped with a PG socket.

The figure below shows the interconnection of two networked S7-300 and a PG.

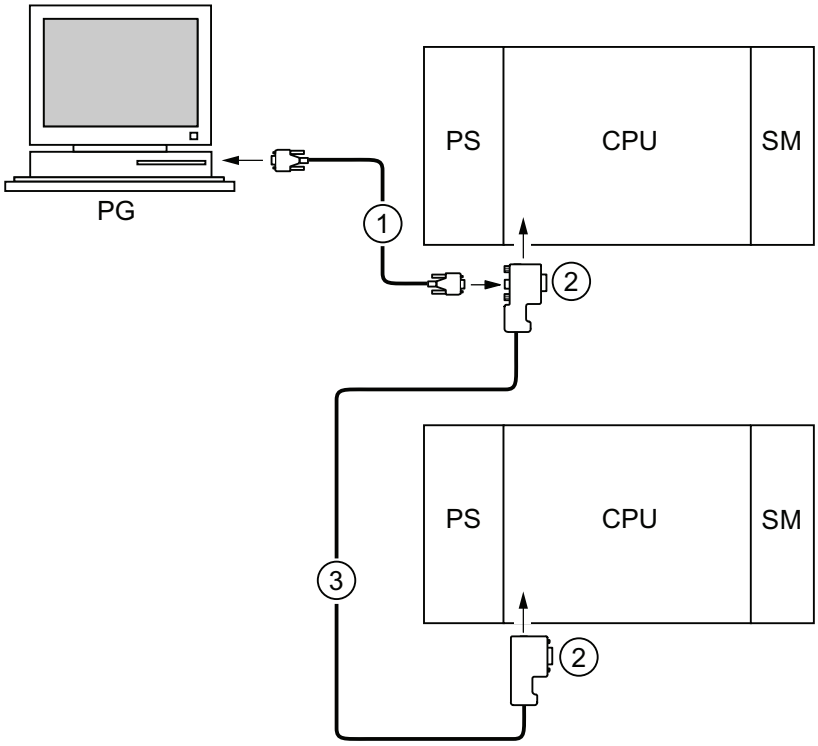

Number	Description
①	Stub cable for connection between programming device and CPU
②	Connectors with enabled terminating resistors
③	PROFIBUS bus cable for linking both CPUs

MPI addresses for service PGs

If there is no stationary PG, we recommend:

To connect a PG to an MPI subnet with "unknown" node addresses, set the following addresses on the service PG:

- MPI address: 0
- Highest MPI address: 126

IN STEP 7, you then determine the highest MPI address on the MPI subnet and match the highest MPI address in the PG to that of the MPI subnet.

See also

Procedure: Commissioning the hardware (Page 141)

Procedure: Software commissioning (Page 143)

8.4.5.5 Connecting a PG to ungrounded MPI nodes (not CPU 31xC)

Requirement

The PG must be equipped with an integrated MPI interface or an MPI card in order to connect it to an MPI.

Connecting a PG to ungrounded nodes on an MPI subnet (not CPU 31xC)

Connecting a PG to ungrounded nodes

Always use an ungrounded PG to connect to ungrounded MPI subnet nodes or to ungrounded S7-300 PLCs.

Connecting a grounded PG to the MPI

You want to operate with ungrounded nodes. If the MPI at the PG is grounded, you must interconnect the nodes and the PG with an RS485 repeater. You must connect the ungrounded nodes to bus segment 2 if the PG is connected to bus segment 1 (terminals A1 B1) or to the PG/OP interface (refer to chapter 9 in the *Module Data* Manual).

The figure below shows an RS485 repeater as interface between grounded and ungrounded nodes of an MPI subnet.

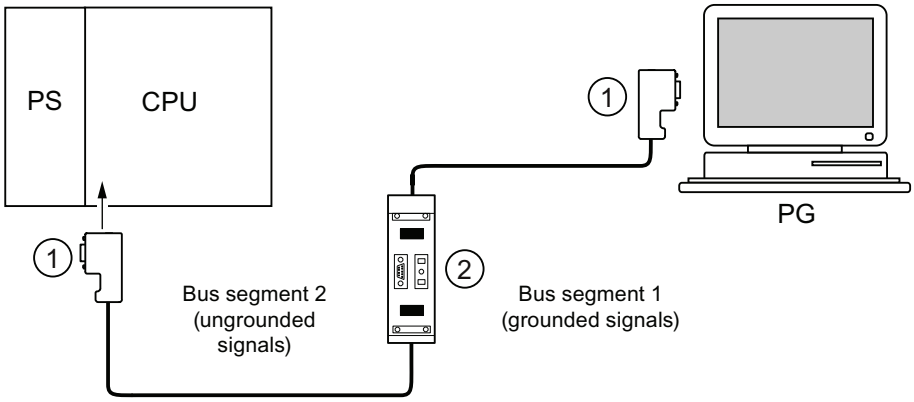

Number	Description
①	Connectors with enabled terminating resistors
②	RS485 Repeaters, with activated terminating resistors

See also

PROFINET cable lengths and network expansion (Page 85)

Network components of MPI/DP and cable lengths (Page 63)

8.4.6 Starting SIMATIC Manager

Introduction

SIMATIC Manager is a GUI for online/offline editing of S7 objects (projects, user programs, blocks, hardware stations and tools).

The SIMATIC Manager lets you

- manage projects and libraries,
- call STEP 7 tools,
- access the PLC (AS) online,
- edit Memory Cards.

Starting SIMATIC Manager

After installation, the **SIMATIC Manager** icon appears on the Windows desktop, and the Start menu contains entry **SIMATIC Manager** under **SIMATIC**.

1. Run SIMATIC Manager by double-clicking the icon, or from the Start menu (same as with all other Windows applications).

User interface

A corresponding editing tool is started up when you open the relevant objects. You start the program editor by double-clicking the program block you want to edit (object-oriented start).

Online Help

The online help for the active window is always called by pressing F1.

8.4.7 Monitoring and modifying inputs and outputs

The "Monitoring and modifying variable" tool

Using the STEP 7 "Monitoring and modifying variable" tool, you can

- monitor program variables in any format
- edit the variable status or contents in the CPU (modifying).

Creating a variable table

You have two options for creating a variable table (VAT):

- in the LAD/FBD/STL editor by selecting the **PLC > Monitor/Modify Variables** command

  This table is also available directly online.

- in SIMATIC Manager with the **Blocks** container open via menu item **Insert New Object > Variable table**

  This table created offline can be saved for future retrieval. You can also test it after switching to online mode.

VAT structure:

In the VAT, every address to be monitored or modified (e.g. inputs, outputs) occupies one row.

The meaning of the VAT columns is as follows:

Column text	This field ...
Address	contains the absolute address of the variable
Icon	contains the symbolic descriptor of the variable This is identical to the specification in the Symbol Table.
Symbol comment	shows the symbol comment of the Symbol Table
Status format	contains the default format setting, e.g. HEX. You can change the format as follows: • right-click in the format field. The Format List opens. or • left-click in the format field until the relevant format appears
Status value	shows the contents of the variable at the time of update
Modify value	is used to enter the new variable value (modify value)

Monitor variable

You have two options for monitoring variables:

- updating the status values once via menu item **Variable > Update Status Values**

  or

- continuous update of status values via menu item **Variable > Monitor**

Modifying variable

To modify variables, proceed as follows:

1. Left-click the field **Modify value** of the relevant variable.
2. Enter the modify value according to the data type.
3. To update modify values once, select the menu item **Variable > Activate Modify Values**.

   or

   Enable modify values permanently via menu item **Variable > Modify**.
4. Use the **Monitor** test function to verify whether the modify value was entered in the variable.

Is the modify value valid?

You can disable the modify value entered in the table. An invalid value is displayed same as a comment. You can re-enable the modify value.

Only valid modify values can be enabled.

Setting the trigger points

Trigger points:

- The "Trigger point for monitoring" determines the time of update for values of variables to be monitored.
- The "Trigger point for modifying" determines the time for assigning the control values to the variables to be modified.

Trigger condition:

- The "Trigger condition for monitoring" determines whether to update values once when the trigger point is reached or continuously every time the trigger point is reached.
- The "Trigger condition for modifying" determines whether to assign control values once or permanently to the variables to be modified.

Start the settings of the trigger points in the "Monitoring and modifying variable" tool, **Variable > Set triggers ...** menu command.

Special features:

- If "Trigger condition for monitoring" is set to **once** , the menu items **Variable > Update Status Values** or **Variable > Monitor** have the same effect, namely a single update.
- If "Trigger condition for modifying" is set to **once** , the menu items **Variable > Update modify values** or **Variable > Modify** have the same effect, namely a single assignment.
- If trigger conditions are set to **permanent** , the said menu items have different effects as described above.
- If monitoring and modifying is set to the same trigger point, monitoring is executed first.
- If **Process operation** is set under **Debug > Mode**, value assignment does not take place in every cycle when **permanent modifying** is set.
  Remedy: Use the **Force** test function.

Saving/opening the variable table

Saving the VAT

1. After aborting or completing a test phase, you can save the variable table to memory. The name of a variable table starts with the letters VAT, followed by a number from 0 to 65535; e.g. VAT5.

Opening VAT

1. Select the menu item **Table > Open**.
2. Select the project name in the **Open** dialog.
3. In the project window below, select the relevant program and mark the **Blocks** container.
4. In the block window, select the desired table.
5. Confirm with **OK**.

establishing a connection to the CPU

The variables of a VAT represent dynamic quantities of a user program. In order to monitor or modify variables it is required to establish a connection to the relevant CPU. Every variable table can be linked to another CPU.

In menu item **PLC > Connect to ...** , establish a connection to one of the following CPUs:

- configured CPU
- directly connected CPU
- available CPU ...

The table below lists the display of variables.

CPUs	The CPU variables are displayed, ...
configured CPU	in their S7 program (Hardware Station) in which the VAT is stored.
directly connected CPU	that is connected directly to the PG.
available CPU	that is selected in the dialog window. Use the menu items **PLC > Connect to ... > Available CPU ...** to connect to an available CPU. This can be used to connect to any CPU available on the network.

Modifying outputs in CPU STOP mode

The function **Enable PO** resets the output disable signal for the peripheral outputs (PO), thus enabling modifying of the PO in CPU STOP mode.

In order to enable the POs, proceed as follows:

1. In menu item **Table > Open the variable table (VAT)**, open the VAT that contains the PO you want to modify, or activate the window containing the corresponding VAT.
2. To modify the PO of the active VAT, select the CPU connection in menu command **PLC > Connect to ...** .
3. Use menu command **PLC > Operating Mode** to open the **Operating Mode** dialog and switch the CPU to STOP mode.
4. Enter your values in the "Modify value" column for the PO you want to modify.

   Examples:
   I/O output: POB 7 modify value: 2#0100 0011
   POW 2 W#16#0027
   POD 4 DW#16#0001
5. Select **Variable > Enable PO** to set "Enable PO" mode.
6. Modify the PO by selecting **Variable > Activate Modify Values**. "Enable PO" mode remains active until reset by selecting **Variable > Enable PO** to disable this mode.

   "Enable PO" is also terminated when the connection to the programming device is canceled.
7. Return to step 4 if you want to set new values.

Note

For example, a message pops up to indicate a CPU mode transition from STOP to RUN or START-UP.
A message also pops up if you select the "Enable PO" function while the CPU is in RUN mode.

8.5 Commissioning PROFIBUS DP

8.5.1 Commissioning the PROFIBUS DP network

Requirements

Requirements for commissioning a PROFIBUS DP network:

- A PROFIBUS DP network is installed.
- You have configured the PROFIBUS DP network using STEP 7 Standard Package and have assigned a PROFIBUS DP address and the address space to all the participants.
- Note that you must also set address switches at some of the DP slaves (see the description of the relevant DP slave).
- Software requirements are shown in the table below, based on the CPU used:

Table 8- 6 Software requirements

CPU	Order number	Software required
313C-2 DP	6ES7313-6CG04-0AB0	STEP 7 as of V5.5 + SP1 or STEP 7 as of V5.3 + SP2 with HSP
314C-2 DP	6ES7314-6CH04-0AB0	
314C-2 PN/DP	6ES7314-6EH04-0AB0	STEP 7 as of V5.5 + SP1 or STEP 7 as of V5.5 + HSP
315-2 DP	6ES7315-2AH14-0AB0	STEP 7 as of V5.5 + SP1 or STEP 7 as of V5.2 + SP1 + HSP
315-2 PN/DP	6ES7315-2EH14-0AB0	STEP 7 as of V5.5 + SP1 or STEP 7 as of V5.5 + HSP
317-2 DP	6ES7317-2AK14-0AB0	STEP 7 as of V5.5 + SP1 or STEP 7 as of V5.2 + SP1 with HSP
317-2 PN/DP	6ES7317-2EK14-0AB0	STEP 7 as of V5.5 + SP1 or STEP 7 as of V5.5 + HSP
319-3 PN/DP	6ES7318-3EL01-0AB0	STEP 7 as of V5.5

DP address ranges of the CPUs

Table 8- 7 DP address ranges of the CPUs

Address range	313C-2 DP 314C-2 DP 315-2 DP 315-2 PN/DP	314C-2 PN/DP	317-2 DP 317-2 PN/DP 319-3 PN/DP
Entire address range of inputs and of outputs	2048 Byte	2048 Byte	8192 Byte
of these in the process image, for inputs and outputs respectively	Max. 2048 bytes	Max. 2048 bytes	Max. 8192 bytes
• Default	128 Byte	256 Byte	256 Byte

DP diagnostic addresses

DP diagnostic addresses occupy 1 byte per DP master and DP slave in the input address range. For example, at these addresses DP standard diagnostics can be called for the relevant node (LADDR parameter of SFC 13). The DP diagnostic addresses are specified in your configuration. If you do not specify any DP diagnostic addresses, STEP 7 assigns these DP diagnostic addresses in ascending order, starting at the highest byte address.

In the case of a CPU 31xC-2 DP, CPU 31x-2 DP or CPU 31x PN/DP assigned as a master, two different diagnostic addresses must be assigned for S7 slaves.

- Diagnostic address of the slave (address for slot 0)

  At this address all slave events are reported in the DP master (Node representative), e.g. Node failure.

- Diagnostic address of the module (address for slot 2)

  All module (CPU 313C-2 DP as I-Slave, for example) events are reported in the master (OB82) at this address. With a CPU as DP Slave, for example, diagnostic interrupts for operating mode transitions are reported at this address.

See also

Connecting the PG to a node (Page 156)

Connecting the PG to several nodes (Page 157)

8.5.2 Commissioning the CPU as DP master

Requirements for commissioning

- The PROFIBUS subnet has been configured.
- The DP slaves are ready for operation (see relevant DP slave manual).
- In order to operate the MPI/DP interface as DP interface, it must be configured accordingly (only CPU 314-2 PN/DP, CPU 315-2 PN/DP, CPU 317 and CPU 319).
- You must configure the CPU as DP master prior to commissioning. That is, in STEP 7 you have to
  - configure the CPU as a DP master,
  - assign a PROFIBUS address to the CPU,
  - assign a master diagnostic address to the CPU,
  - integrate the DP slaves into the DP master system.

    Is the DP CPU a DP slave?

    If so, this DP slave appears in the PROFIBUS DP catalog as **configured station**. In the DP master, assign a slave diagnostic address to this DP slave CPU. You must interconnect the DP master with the DP slave CPU and specify the address ranges for data exchange with the DP slave CPU.

Commissioning

Commission the DP CPU as a DP master in the PROFIBUS subnet as follows:

1. Download the PROFIBUS subnet configuration created with STEP 7 (preset configuration) from the PG to the DP CPU.
2. Switch on all of the DP slaves.
3. Switch the DP CPU from STOP to RUN.

Startup of DP CPU as DP master

During startup, the DP CPU checks the configured expected configuration of its DP master system against the actual configuration.

If preset configuration = actual configuration, the CPU switches to RUN mode.

If the preset configuration ≠ to the actual configuration, the configuration of parameter **Startup if preset configuration ≠ actual configuration** determines the startup behavior of the CPU.

Startup when the preset configuration ≠ actual configuration = yes (default setting)	Startup when the preset configuration ≠ actual configuration = no
DP CPU switches to RUN. (BUSF LED flashes if any of the DP slaves cannot be addressed)	DP CPU remains in STOP mode, and the BUS LED flashes after the set **Monitoring time for transfer of parameters to modules**. The flashing BUSF LED indicates that at least one DP slave cannot be accessed. In this case, check whether all DP slaves are switched on or correspond with your configuration, or read out the diagnostic buffer with STEP 7.

Recognizing the operating state of DP slaves (Event recognition)

The table below shows how the DP CPU operating as a DP master recognizes operating mode transitions of a CPU operating as a DP slave or data exchange interruptions.

Table 8- 8 Detecting operating mode transitions and station failure of DP CPUs operated as DP slave in the DP CPU as master

Event	What happens in the DP master?
Bus interruption (short circuit, connector removed)	• Call of OB 86 with the message **Station failure** (incoming event; diagnostic address of the DP slave assigned to the DP master) • With I/O access: Call of OB 122 (I/O access error)
DP slave: RUN → STOP	• Call of OB 82 with the message **Module error** (incoming event; diagnostic address of the DP slave assigned to the DP master; variable OB82_MDL_STOP = 1)
DP slave: STOP → RUN	• Call of OB 82 with the message **Module OK** (incoming event; diagnostic address of the DP slave assigned to the DP master; variable OB 82_MDL_STOP = 0)

Tip:

When commissioning the CPU as DP master, always program OB82 and OB86. This helps you to recognize and evaluate data exchange errors or interruption.

Status/modify, programming via PROFIBUS

As an alternative to the MPI interface, you can program the CPU or execute the PG status and modify functions via the PROFIBUS DP interface.

Note

The use of Status and Modify via the PROFIBUS DP interface extends the DP cycle.

Constant bus cycle time

This is a property of PROFIBUS DP. The "Constant bus cycle time" function ensures that the DP master always starts the DP bus cycle within a constant interval. From the perspective of the slaves, this means that they receive their data from the master at constant time intervals.

In STEP 7 V5.x or higher, you can configure constant bus cycle times for PROFIBUS subnets. Details on constant bus cycle times are found in the *STEP 7 Online Help.*

Isochronous updating of process image partitions

SFC 126 "SYNC_PI" is used for the isochronous update of the process image partition of inputs. An application program which is interconnected with a DP cycle (by means of OB61) can use this SFC for consistent updates of data recorded in the process image partition of inputs in synchronism with this cycle. SFC126 accepts interrupt control and can only be called in OB61.

SFC 127 "SYNC_PO" is used for the isochronous update of the process image partition of outputs. An application program which is interconnected to a DP cycle can use the SFC for the consistent transfer of the computed output data of a process image partition of outputs to the I/O in synchronism with this cycle. SFC 127 accepts interrupt control and can only be called in OB 61.

The SFCs 126 and 127 are described in the *STEP 7 Online Help* and in the *System Software S7-300/400, System and Standard Functions* Reference Manual.

The following CPUs support isochronous mode at the PROFIBUS DP:

- CPU 315-2 DP
- CPU 315-2 PN/DP
- CPU 317-2 DP
- CPU 317-2 PN/DP
- CPU 319-3 PN/DP

CPUs with two DP interfaces (CPU 317-2 DP and CPU 319-3 PN/DP) only support isochronous mode on their second (DP) interface.

Note

Isochronous mode is possible on PROFIBUS or on PROFINET.

Reference

For more information about the isochronous mode, refer to the Isochronous mode (http://support.automation.siemens.com/WW/view/en/15218045/) Manual.

Clock synchronization

For information about clock synchronization via PROFIBUS DP, refer to the CPU 31xC und CPU 31x Manual, Technical Specifications, chapter: Clock synchronization.

Sync/Freeze

The SYNC control command is used to set sync mode on the DP slaves of selected groups. In other words, the DP master transfers current output data and instructs the relevant DP slaves to freeze their outputs. The DP slaves writes the output data of the next output frames to an internal buffer; the state of the outputs remains unchanged.

Following each SYNC control command, the DP slaves of the selected groups transfer the output data stored in the internal buffer to the process outputs.

The outputs are only updated cyclically again after you transfer the UNSYNC control command using SFC11 "DPSYC_FR".

The FREEZE control command is used to set the relevant DP slaves to Freeze mode, in other words, the DP master instructs the DP slaves to freeze the current state of the inputs. It then transfers the frozen data to the input area of the CPU.

Following each FREEZE control command, the DP slaves freeze the state of their inputs again.

The DP master receives the current state of the inputs cyclically again only after you have sent the UNFREEZE control command with SFC11 "DPSYC_FR".

The SFC 11 is described in the corresponding *STEP 7 Online Help* and in the *System Software S7-300/400, System and Standard Functions* Reference Manual.

Startup of the DP master system

DP CPUs as DP master
The **Parameter transfer to modules** parameter is also used to define the startup monitoring time for DP slaves.
That is, the DP slaves must startup and must have received all parameters from the CPU (as DP master) within the defined time.

PROFIBUS address of the DP master

For the DP CPU, you **must not set "126"** as a PROFIBUS address.

8.5.3 Commissioning the CPU as DP Slave

Requirements for commissioning

- The DP master is configured and programmed.
- If the MPI/DP interface of your CPU must be a DP interface, you must configure the interface as DP interface.
- Prior to commissioning, you must set the relevant parameters and configure the DP CPU for operation as DP slave. That is, in STEP 7 you have to
  - "power on" the CPU as DP slave,
  - assign a PROFIBUS address to the CPU,
  - assign a slave diagnostic address to the CPU,
  - specify whether the DP master is an S7 DP master or another DP master,
  - specify the address ranges for data exchange with the DP master.
- All other DP slaves are programmed and configured.

GSD files

If you are working on an IM 308-C or third-party system, you require a GSD file to configure the DP CPU as a DP slave in a DP master system.

COM *PROFIBUS V* 4.0 or later includes this GSD file.

When working with an older version or another configuration tool, you can download the GSD file from the Internet (http://support.automation.siemens.com/WW/view/en/10805317/133100).

Note

This note applies to the CPUs 31xC-2 DP, CPU 315, CPU 317 and CPU 319.

If you wish to use the CPU as a standard slave using the GSD file, you must not set the Commissioning / Test mode check box on the DP interface properties dialog box when you configure this slave CPU in STEP 7.

Configuration and parameter assignment message frame

STEP 7 assists you during configuration and parameter assignment of the DP CPU. If you need a description of the configuration and parameter assignment frame, for example in order to use a bus monitor, you can find it on the Internet (http://support.automation.siemens.com/WW/view/en/1452338).

Commissioning

Commission the DP CPU as a DP slave in the PROFIBUS subnet as follows:

1. Switch on power, but hold the CPU in STOP mode.
2. First, switch on all other DP masters/slaves.
3. Now switch the CPU to RUN mode.

Startup of DP CPU as DP slave

When the DP-CPU is switched to RUN mode, two mutually independent operating mode transitions are executed:

- The **CPU** switches from STOP to RUN mode.
- The CPU starts data exchange with the DP master via the **PROFIBUS DP interface**.

Recognizing the Operating State of the DP master (Event Recognition)

The table below shows how the DP CPU operating as a DP slave recognizes operating state transitions or data exchange interruptions.

Table 8- 9 Detecting operating mode transitions and station failure of DP CPUs operated as DP master, in the DP CPU as DP slave

Event	What happens in the DP slave?
Bus interruption (short circuit, connector removed)	• Call of OB 86 with the message **Station failure** (coming event; diagnostic address assigned to the DP slave) • With I/O access: Call of OB 122 (I/O access error)
DP master: RUN → STOP	• Call of OB 82 with the message **Module error** (incoming event; diagnostic address assigned to the DP slave; variable OB82_MDL_STOP = 1)
DP master: STOP → RUN	• Call of OB 82 with the message **Module OK** (outgoing event; diagnostic address assigned to the DP slave; variable OB82_MDL_STOP = 0)

Tip:

When commissioning the CPU as DP slave, always program OB82 and OB86. This helps you to recognize and evaluate the respective operating states or data exchange errors.

Status/modify, programming via PROFIBUS

As an alternative to the MPI interface, you can program the CPU or execute the PG's status and control functions via the PROFIBUS DP interface.

Note

The execution of status and control function via PROFIBUS DP interface extends the DP cycle.

User data transfer by way of transfer memory

The DP CPU operating as intelligent DP slave provides a transfer memory for PROFIBUS DP. User data are always exchanged between the CPU (DP slave) and the DP master by way of this transfer memory. You can configure up to 32 address ranges for this function.

That is, the DP master writes its data to these transfer memory address ranges, the CPU reads these data in the user program, and vice versa.

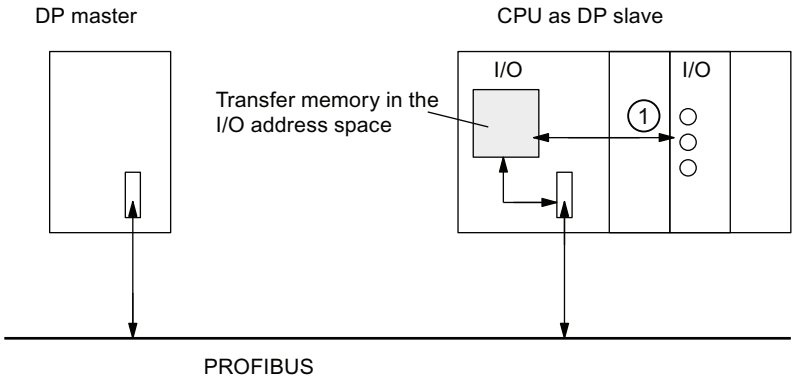

Number	Description
1	The functions which control data exchange between transfer memory and the distributed I/O of the slave CPU must be implemented in the user program. The DP master cannot access this I/O directly.

Address ranges of transfer memory

In STEP 7, configure the I/O address ranges:

- You can configure up to 32 I/O address ranges.
- The maximum length of this address range is 32 bytes.
- You can configure a maximum of 244 input bytes and 244 output bytes.

The table below shows the principle of address ranges. You can also find this figure in the STEP 7 configuration.

Table 8- 10 Configuration example for the address ranges of transfer memory

	Type	Master address	Type	Slave address	Length	Unit	Consistency
1	I	222	O	310	2	BYTE	Unit
2	O	0	I	13	10	Word	Total length
:							
32							
	Address ranges in the DP master CPU		Address ranges in the DP slave CPU		These paramaters of the address ranges must be the same for DP master and DP slave.		

Example program

Below, you will see a small example program for data exchange between the DP master and the DP slave. The addresses used in the example are found in the table above.

```
In the DP slave CPU                                  In the DP master CPU
L      2          //Data preparation in the
                  //DP slave
T      MB   6
L      IB   0
T      MB   7
L      MW   6     //Forward data to
                  //DP master
T      PQW  310

                                                     L     PIB   222    //continued processing of
                                                                          //received data in DP master
                                                     T     MB    50
                                                     L     PIB   223
                                                     L     B#16#3
                                                     +     I
                                                     T     MB    51
                                                     L     10            //Data preparation in the
                                                                          //DP master
                                                     +     3
                                                     T     MB    60
                                                     CAL   SFC   15      //Send data to the DP slave
                                                     L
                                                       LADDR:= W#16#0

                                                      RECORD:=P#M60.0    //In the user program of the
                                                      Byte20             masters
                                                                         //a block of 20 bytes length
                                                                         starting at MB60
                                                                         //is written consistently to the
                                                                         output area
                                                                         //PAB0 to PAB19
                                                                         //(transfer area from master to
                                                                         //slave)

                                                      RET_VAL :=MW 22


CALL   SFC  14    //Receive data from
                  //DP master
  LADDR:=W#16#D    //In the slave, the
                   //peripheral bytes PEB13
                   //to PEB32 (data
                   //transferred from master)
                   //are read consistently and
                   //stored in MB30
```

```
                    //to MB49
  RET_VAL :=MW 20
  RECORD:=P#M30.0 byte 20
L      MB    30    //Received data
                   //continue processing
L      MB    7
+      I
T      MW    100
```

Working with transfer memory

Note the following rules when working with the transfer memory:

- Assignment of address ranges:
  - Input data of DP slaves are **always** output data of the DP master
  - Output data of DP slaves are **always** input data of the DP master
- The user can define these addresses. In the user program, access data with load/transfer instructions or with SFC 14 and SFC 15. You can also define addresses of the process image of inputs or outputs.
- The lowest address of specific address ranges is their respective start address.
- The length, unit and consistency of the address ranges for DP master and DP slave must be identical.
- The master and slave addresses may differ in logically identical transfer memory (independent logical I/O address spaces in the master and slave CPU).

Note

Assign addresses from the I/O address range of the DP CPU to the transfer memory. You cannot use any addresses which have been assigned to transfer memory for other I/O modules.

S5 DP master

If you use an IM 308-C as a DP master and the DP CPU as a DP slave, the following applies to the exchange of consistent data.

Use IM 308-C in the S5 control to program FB192 for enabling exchange of consistent data between the DP master and slave. With the FB192, the data of the DP CPU are only output or read out in a consistent block.

S5-95 as DP master

If you set up an AG S5-95 for operation as DP master, you also have to set its bus parameters for the DP CPU as DP slave.

User data transfer in STOP mode

User data is treated in transfer memory according to the STOP state of the DP master or DP slave.

- **The DP slave CPU goes into STOP:**

  Data in transfer memory of the CPU is overwritten with "0", that is, the DP master reads "0" in direct data exchange mode.

- **The DP master goes into STOP:**

  Current data in transfer memory of the CPU are retained and can be read by the CPU.

PROFIBUS address

For the DP CPU, you **must not set "126"** as a PROFIBUS address.

See also

User-specific addressing of modules (Page 129)

8.5.4 Direct data exchange

Requirements

STEP 7 V 5.x or higher lets you configure "Direct data exchange" for PROFIBUS nodes. DP CPUs can take part in direct data exchange as senders and receivers.

Definition

"Direct data exchange" is a special communication relationship between PROFIBUS DP nodes.

Characteristic of direct data exchange are the PROFIBUS DP nodes "Listening" on the bus for data a DP slave returns to its DP master. This mechanism allows "Listening stations" (receivers) direct access to modified input data of remote DP slaves.

address ranges

In your STEP 7 configuration of the relevant peripheral input addresses, specify which address range of the receiving node is to receive data requested from the sending node.

The following types of DP-CPU are possible:

- DP slave sending station
- Receiving station, as DP slave or DP master, or as CPU not integrated in a master system.

Example: Direct data exchange via DP CPUs

The example in the figure below shows the relationships you can configure for direct data exchange. In the figure all the DP masters and all the DP slaves that are marked as "CPU" are each a DP CPU.

Note that other DP slaves (ET 200M, ET 200pro, ET 200S) can only operate as sending nodes.

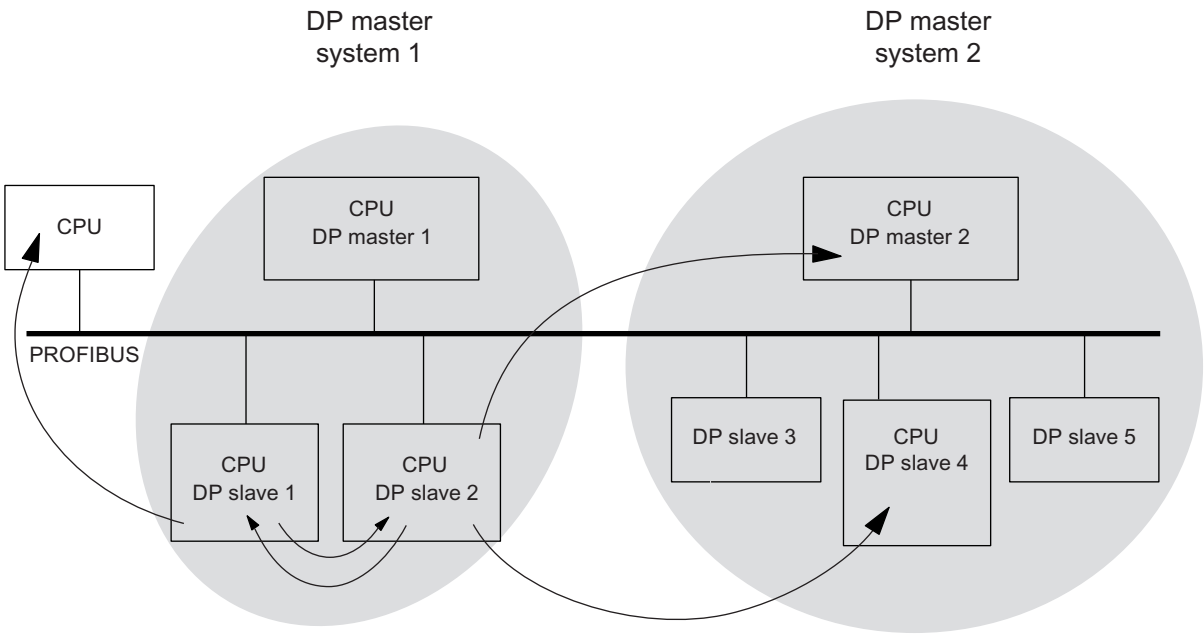

Figure 8-1 Direct data exchange via DP CPUs

8.6 Commissioning PROFINET IO

8.6.1 Requirements

Requirements

PROFINET IO is supported in STEP 7 V5.3 SP1 or higher. A later version of STEP 7 may be required to support specific CPU functionality. Information about the STEP 7 versions required for specific CPUs is available in the *CPU 31xC and CPU 31x, Technical Data* Manual.

PROFINET IO address ranges of the CPUs

Table 8- 11 PROFINET IO address ranges of the CPUs

Address range	314C-2 PN/DP	315-2 PN/DP	317-2 PN/DP	319-3 PN/DP
Entire address range of inputs and of outputs	2048 Bytes	2048 Bytes	8192 Bytes	8192 Bytes
of these in the process image, for inputs and outputs respectively	Max. 2048 bytes	Max. 2048 bytes	Max. 8192 bytes	Max. 8192 bytes
• Default	256 Bytes	128 Bytes	256 Bytes	256 Bytes

Diagnostic addresses use 1 byte each in the input address range for

- the IO controller, PROFINET interface and ports
- all I/O devices (PROFINET interface and its ports) and all modules/submodules inside the device

You can use these addresses, for example, to read module-specific diagnostics data records by calling SFB52. STEP 7 assigns diagnostic addresses in descending order, starting at the highest byte address.

Information about the structure of module-specific diagnostics data records is available in the *From PROFIBUS DP to PROFINET IO* Programming Manual.

8.6.2 Commissioning the PROFINET IO system

Commissioning requirements:

- The CPU is in STOP mode.
- The IO devices are switched on.
- The PROFINET subnet is installed and the communication nodes (e.g. programming device,
  IO controller, IO devices) are connected to the PROFINET subnet.

Options of commissioning the PROFINET IO system

There are several ways for you to start with commissioning the PROFINET IO interface of the CPU, and then the PROFINET IO system:

- Online via MPI/ DP interface
- online via the PROFINET interface
- Offline, by saving the data to a Micro Memory Card in SIMATIC Manager on your programming device and then inserting the Micro Memory Card into the CPU

Commissioning a PROFINET IO system via MPI/DP

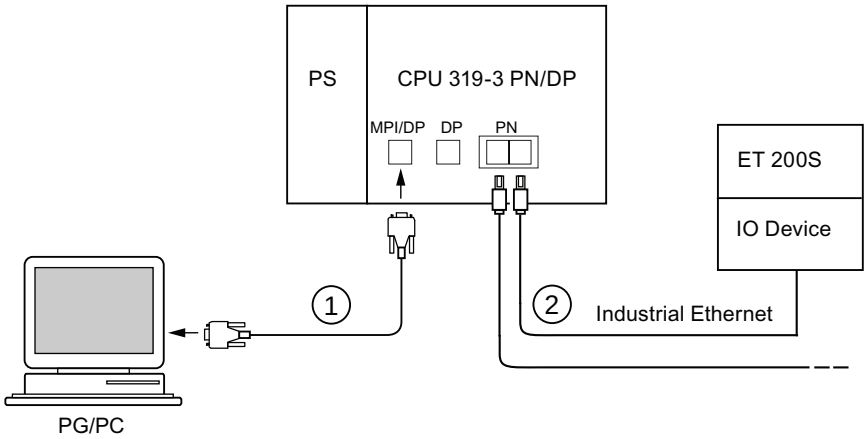

Number	Meaning
①	Use the PG cable to connect the PG to the integrated MPI/DP interface of the CPU.
②	Using a twisted-pair cable, connect the IO device to a port of the PROFINET interface of the CPU. You can connect additional PROFINET devices to the second free port of the PROFINET interface.

Note

Usually, you must use an external switch to interconnect CPUs 31x PN/DP without integrated switch (PN interface with single port) with other PROFINET devices.

Commissioning a PROFINET IO system directly via PROFINET interface

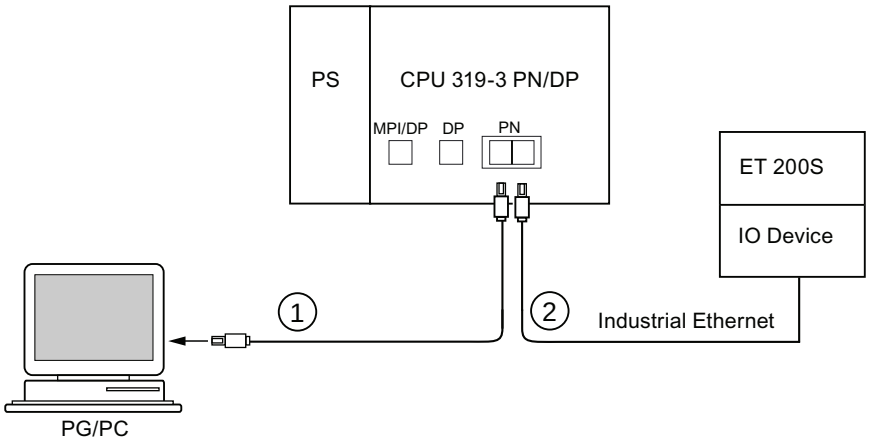

Number	Meaning
①	Using a preassembled twisted-pair cable, connect the programming device/PC to one of the ports of the PROFINET interface of the CPU.
②	Using a twisted-pair cable, connect the IO device to the second available port of the PROFINET interface of the CPU.

8.6.3 Configuring the PROFINET IO system

Configuring the PROFINET IO system

Step	Tasks
Configuring hardware in the STEP 7 SIMATIC Manager	
1	Select **File > New ...** Assign a name to your project and confirm with "OK".
2	Select **Insert > Station > SIMATIC 300 Station** to add an S7-300 station.
3	Double-click "Hardware". **Result**: HW Config opens.
4	Insert your components by means of drag-and-drop: • Mounting rail • Power supply • CPU 31x PN/DP (CPU 317-2 PN/DP, for example) **Result**: The "Properties – Ethernet Interface PN-IO" dialog box opens. The properties of the PROFINET X2 interface are shown in the Parameters tab.
Assigning the IP address (example: assigning a retentive IP address)	
5	Click "New" on the "Properties – Ethernet Interface PN-IO" dialog box to create a new subnet. **Result**: The "Properties – New Industrial Ethernet Subnet" dialog box opens.

Step	Tasks
6	Assign a name and confirm with "OK". **Result**: You are back to the "Properties – Ethernet Interface PN-IO" dialog box.
7	Enter the IP address and the subnet mask in the dialog box. This information is available from your network administrator. Note: The worldwide unique MAC address is preset by the manufacturer and cannot be changed.
8	If you setup a connection via router, you must also enter the address of the router. This information is also available from your network administrator.
9	Click "OK" to close the properties dialog box.
Configuring the PROFINET IO system	
10	Insert the IO devices at the PROFINET IO system, for example, an IM 151-3 PN (ET 200S under PROFINET IO), then configure the slots and set their parameters by means of drag-and-drop, based on the physical assembly.
11	Select **Edit > Object properties** to assign device names and numbers to the IO devices.
12	When operating PROFINET IO and PROFINET CBA in parallel, set up the PROFINET IO system properties by • activating the "Use this module for PROFINET CBA communication" check box • adapting the "Communication portion (PROFINET IO)" in the "Update time" tab (change the communication portion of PROFINET IO to 87.5 %, for example). 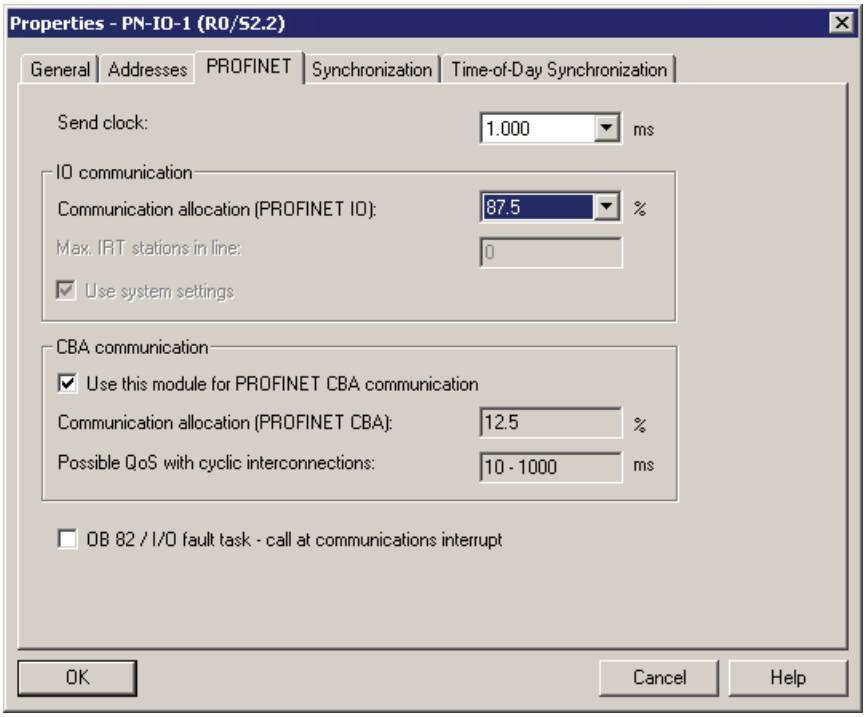
13	If you want the diagnostic events reported to the PROFINET interface to trigger the call of a diagnostic interrupt OB (OB 82), open the properties dialog of the PROFINET IO system • and select the check box "OB 82 / IO fault task - call at communications interrupt" Tip: The event information is also available in the diagnostic buffer of the CPU.
14	Save your configuration with **Station > Save and compile**.

Step	Tasks
Configuration Download	
15	Download the configuration to the CPU. You have three options: • Online via MPI/ DP interface (the PG and CPU must be located in the same subnet). When you download the configuration in a system containing several node addresses, select the appropriate MPI or PROFIBUS address of the destination CPU. • online via the PROFINET interface When you download the configuration in a system containing several nodes, select the appropriate IP address of the destination CPU. The "available users" can be displayed in a download dialog box. If you have not yet assigned an IP address to the CPU, select the MAC address of the target CPU. In the next dialog box, you can assign the configured IP address to the CPU. The PG must be connected to the subnet. The interface of the programming device must be set to TCP/IP (Auto) mode. Setting in the **IE-PG Access** tab of the interface properties dialog box: **Assign project-specific IP address**. • Offline, by saving the data to a Micro Memory Card in SIMATIC Manager on your programming device and then inserting the Micro Memory Card into the CPU
Assigning IO device names	
16	**Requirement:** The programming device must be connected to the subnet. The interface of the programming device must be set to TCP/IP (Auto) mode. Setting in the **IE-PG Access** tab of the interface properties dialog box: **Assign Project-Specific IP Address.** **Procedure:** In online mode, select the various IO devices in HW Config, then select **PLC > Ethernet > Assign Device Name** to assign the corresponding device names. **Note:** If you enabled the "Support device replacement without removable medium" function in your parameters and specified the target topology of the PROFINET IO system using the topology editor, you could possibly dispense with the specification of the device name. For this to be the case, the actual topology must correspond with the target topology and the devices must be reset to the factory settings. Note: The CPU can only assign the IP address automatically, and thus enable its correct communication with the IO device, after you assigned a device name to the latter. If the configuration of the IO devices you downloaded to the CPU actually corresponds with their physical configuration on the subnet, the CPU addresses the IO devices, and the BF LED stops flashing both on the CPU and on the IO device. You can now switch the CPU to RUN, provided there are no other conditions preventing a startup, and the CPU and IO devices exchange data (read inputs, write outputs, for example).

Result

You used STEP 7 to configure the PROFINET interface of your CPU and the and the PROFINET IO system. The CPU can now be reached by other nodes in your Industrial Ethernet subnet.

Reference

- Additional options for the IP address assignment are described in chapter Assigning IP address parameters and device names (Page 137)
- For more information with regard to the address assignment and settings of the properties for the PROFINET IO interface and the individual ports, refer to the STEP 7 Online Help and to the PROFINET System Description (http://support.automation.siemens.com/WW/view/en/19292127).

CPU startup for operation as IO controller

In its startup sequence, and based on the preset configuration, the CPU verifies the actual configuration

- of the local I/O,
- of the distributed I/O on the PROFIBUS DP system, and
- the PROFINET IO system.

The startup of the CPU is determined by the corresponding configuration in the "Startup" tab:

Table 8- 12 CPU startup for operation as IO controller

Preset configuration = actual configuration	Preset ≠ Actual configuration	
	Startup permitted if the preset configuration does not match the actual configuration	Startup not permitted if the preset configuration does not match the actual configuration
CPU goes into RUN.	CPU goes into RUN. After POWER ON, and after the parameter monitoring time has expired, the CPU goes into RUN. The flashing of the BF-LED for the PROFINET interface indicates that at least one IO device cannot be addressed. In this case, check whether all IO devices are switched on and correspond to the specified configuration. For additional information, read the diagnostics buffer in STEP 7.	CPU startup fails.

CPU startup for operation as intelligent device

In its startup sequence, and based on its preset configuration, the CPU verifies the actual configuration

- of the local I/O,
- of the distributed I/O on the PROFIBUS DP system, and
- the PROFINET IO system.

The CPU startup depends on the CPU configuration in the **Startup** tab:

Table 8- 13 CPU startup for operation as intelligent device

Target configuration = actual configuration	Preset configuration ≠ actual configuration	
	Startup permitted if the preset configuration does not match the actual configuration	Startup not permitted if the preset configuration does not match the actual configuration
CPU goes into RUN.	CPU goes into RUN. The CPU goes into RUN after POWER ON and expiration of the parameter monitoring time. Flashing of the BF-LED for the PROFINET interface means that: • In a configuration as I-device without IO subsystem: None of the higher-level controllers is able to communicate with the I-device (for example, a connection interruption or mismatch of the transfer areas between the IO controller and the I-device). In this situation, check the configuration and wiring of the PROFINET IO system. • In a configuration as I-device with IO subsystem: The higher-level controller is unable to communicate with the I-device (for example, a connection interruption or mismatch of the transfer areas between the IO controller and the I-device). **Or**: At least one IO device cannot be addressed. In this case, check whether all IO devices are switched on and correspond to the specified configuration. For more information, read the diagnostics buffer in *STEP 7*.	CPU startup fails.

Detecting interruptions in the data transfer to the IO device

The following table shows, how the CPU 31x PN/DP recognizes interruptions of the data transfer:

Table 8- 14 Even recognition of the CPU 31x PN/DP as IO controller

Event	What happens in the IO controller?	
	CPU in RUN	CPU in STOP
Bus interruption (short circuit, connector removed)	• Call of OB86 with the message **Station failure** (coming event; diagnostics address of the IO device) • With I/O access: Call of OB 122 (I/O access error)	• The event is written to the diagnostics buffer

For additional information about this topic and the response to operating mode transitions in the IO controller or I-device, refer to chapter "Intelligent Device" in the PROFINET System Description.

Note

When commissioning the CPU for operation with intelligent devices, always program the OB 83 in the IO controller and intelligent device (because of the return-of-submodule alarms generated during the operating state transition to RUN of the relevant communication partner).

Always program OB86 when you commission the CPU. This allows you to detect and analyze interruptions in the data transfer.

If "OB85 - call up at I/O access error" was configured in HW Config to detect access errors during transfer of the process image, OB85 must also be programmed.

Reference

More detailed information about the user data transfer is found in the PROFINET System Description (http://support.automation.siemens.com/WW/view/en/19292127).

Status/control, programming via PROFINET

As an alternative to the MPI /DP interface, you can program the CPU or execute the PG's status and control functions via the PROFINET interface..

If you have not commissioned the PROFINET interface of the CPU yet, you can connect to the CPU using its MAC address (see also **Configuring the PROFINET IO System** in the table above).

To do so, use HW Config to download your configuration to the CPU. Address the CPU using its MAC address. The CPU is also assigned the configured IP address after you downloaded the configuration. You can now use all PG functions on the interface, for example, loading the program, monitor/modify, ...

Maintenance 9

9.1 Overview

Maintenance in terms of the S7-300

- refers to the backup of the operating system to a SIMATIC Micro Memory Card
- Updating of the operating system from a SIMATIC Micro Memory Card
- Updating of the firmware online
- Backing up of project data on a SIMATIC Micro Memory Card
- Replacement of modules
- Replacement of fuses in digital output modules

9.2 Backing up firmware on a SIMATIC Micro Memory Card

Situations which require backup of the firmware

It is advisable in certain situation to backup your CPU firmware:

You may want to replace the CPU in your system with a CPU out of storage. In this case you should make sure that the firmware of the shelf CPU and of the system firmware are identical.

It is also advisable to create an emergency backup copy of the firmware.

On which CPUs can you back up the firmware?

Backup of the firmware is possible as of the following CPU versions:

CPU	Order number	Firmware as of	Required Micro Memory Card ≥ in MByte
312	as of 6ES7312-1AD10-0AB0	V2.0.0	2
	as of 6ES7312-1AE13-0AB0	V2.0.12	
	as of 6ES7312-1AE14-0AB0	V3.0	
312C	as of 6ES7312-5BD00-0AB0	V1.0.0	2
	as of 6ES7312-5BE03-0AB0	V2.0.12	
	as of 6ES7312-5BF04-0AB0	V3.3.1	
313C	as of 6ES7313-5BE00-0AB0	V1.0.0	2
	as of 6ES7313-5BF03-0AB0	V2.0.12	
	as of 6ES7313-5BG04-0AB0	V3.3.1	

CPU	Order number	Firmware as of	Required Micro Memory Card ≥ in MByte
313C-2 PtP	as of 6ES7313-6BE00-0AB0	V1.0.0	2
	as of 6ES7313-6BF03-0AB0	V2.0.12	
	as of 6ES7313-6BG04-0AB0	V3.3.1	
313C-2 DP	as of 6ES7313-6CE00-0AB0	V1.0.0	4
	as of 6ES7313-6CF03-0AB0	V2.0.12	
	as of 6ES7313-6CG04-0AB0	V3.3.1	
314	as of 6ES7314-1AF10-0AB0	V2.0.0	2
	as of 6ES7314-1AG13-0AB0	V2.0.12	
	as of 6ES7314-1AG14-0AB0	V3.0	
314C-2 PtP	as of 6ES7314-6BF00-0AB0	V1.0.0	2
	as of 6ES7314-6BG03-0AB0	V2.0.12	
	as of 6ES7314-6BH04-0AB0	V3.3.1	
314C-2 DP	as of 6ES7314-6CF00-0AB0	V1.0.0	4
	as of 6ES7314-6CG03-0AB0	V2.0.12	
	as of 6ES7314-6CH04-0AB0	V3.3.1	
314C-2 PN/DP	as of 6ES7314-6EH04-0AB0	V3.3	8
315-2 DP	as of 6ES7315-2AG10-0AB0	V2.0.0	4
	as of 6ES7315-2AH14-0AB0	V3.0	
315-2 PN/DP	as of 6ES7315-2EG10-0AB0	V2.3.0	4
	as of 6ES7315-2EH14-0AB0	V3.1	8
317-2 DP	as of 6ES7317-2AJ10-0AB0	V2.1.0	4
	as of 6ES7317-2AK14-0AB0	V3.3.1	
317-2 PN/DP	as of 6ES7317-2EJ10-0AB0	V2.2.0	4
	as of 6ES7317-2EK14-0AB0	V3.1	8
319-3 PN/DP	as of 6ES7318-3EL00-0AB0	V2.4.0	8
	as of 6ES7318-3EL01-0AB0	V3.2	8

This is how you back up the firmware of your CPU to the SIMATIC Micro Memory Card

Table 9- 1 Backing up the firmware to the SIMATIC Micro Memory Card

Step	Action required:	This happens in the CPU:
1	Insert the new SIMATIC Micro Memory Card into the CPU.	The CPU requests a memory reset.
2	Keep the mode selector in the MRES position.	-
3	POWER OFF/POWER ON and keep the mode selector in the MRES position until ...	... the STOP, RUN and FRCE LEDs start flashing.
4	Mode selector in STOP position.	-
5	Switch mode selector briefly to MRES position, then let it return to STOP.	• The CPU starts to back up the operating system on the SIMATIC Micro Memory Card. • All LEDs are lit during the backup operation. • The STOP LED flashes when the backup is complete to indicate that the CPU requires a memory reset.
6	Remove the SIMATIC Micro Memory Card.	-

9.3 Updating the firmware

Note

Communication shutdown during firmware updates on PROFINET CPUs with integrated switch

Note that the PROFINET interface and the integrated switch are shut down when you update the firmware on this CPU.

During the firmware update on a CPU operated in a line structure, communication via the CPU's integrated switch to downstream devices is shut down.

9.3.1 Firmware update using a Micro Memory Card

In which situations should I update the firmware?

After (compatible) function expansions, or after an enhancement of operating system performance, the firmware of the CPU should be upgraded (updated) to the latest version.

Where do I get the latest version of the firmware?

You can obtain the latest Firmware is available as *.UPD files from your Siemens contact partner, or download it from the Internet at the Siemens Homepage (http://www.siemens.com/automation/service&support)

Firmware update using a SIMATIC Micro Memory Card

Table 9- 2 Firmware update using a SIMATIC Micro Memory Card

Step	Action required:	This happens in the CPU:
1	**Recommendation** Before you update the CPU firmware, create a backup copy of the "old" firmware on an empty SIMATIC Micro Memory Card. If problems occur during the update, you can reload your old firmware from the SIMATIC Micro Memory Card.	
2	Transfer the update files to a blank SIMATIC Micro Memory Card using STEP 7 and your programming device.	-
3	Switch off CPU power and insert a SIMATIC Micro Memory Card containing the firmware update.	-
4	Switch on power.	• The CPU automatically detects the SIMATIC Micro Memory Card with the firmware update and runs the update. • All LEDs are lit during firmware update. • The STOP LED flashes when the FW update is completed, and indicates that the CPU requires a memory reset.
5	Switch off CPU power and remove a SIMATIC Micro Memory Card containing the firmware update.	-

Result

You updated the CPU with a new firmware version.

The address and baud rate of the first interface remain retentive. All other parameters were reset during the firmware update.

NOTICE
Any cancellation of the firmware update caused by actions such as POWER OFF/ON or removal of the Micro Memory Card can lead to the loss of the CPU firmware. In this mode, only the SF-LED flashes at a frequency of 2 Hz, while all other LEDs are switched off. However, since the boot block is retained, you can restore the valid firmware by repeating the FW update as described above.

9.3.2 Updating the firmware online (via networks)

On which CPUs can you update the firmware online?

You can carry out a firmware update online for all CPUs as of V 2.2 and higher.

Information about the firmware update online using MPI or DP networks for older modules is available on the Service&Support pages (http://www.siemens.com/automation/service).

Requirements

- An online firmware update is possible in STEP 7 V 5.3 or higher.
- To update the firmware, you require the *.UPD files which contain the current firmware version.
- The files (*.UPD) containing the current firmware version must be available in the file system on your PG/PC. A folder may contain only the files of one firmware version.
- The CPU can be accessed online.

Performing a firmware update

1. Run STEP 7 and change to HW Config.
2. Open the station containing the CPU you want to update.
3. Select the CPU.
4. Select the menu command **PLC > Update Firmware**. The menu command can only be executed if the selected CPU supports the "Update Firmware" function.
5. The **Update firmware** dialog box opens. Click **Browse** to select the path to the firmware update files (*.UPD)
6. After you selected a file, the information in the lower fields of the **Update Firmware** dialog box shows you the firmware file and version for the corresponding modules.
7. Click the **Run** button. STEP 7 verifies that the selected file can be interpreted by the module, and then downloads the file to the CPU. If this requires changing the operating state of the CPU, you will be asked to perform these tasks in the relevant dialog boxes. The CPU then automatically updates the firmware.
8. In STEP 7 (reading the CPU diagnostics buffer), verify that the CPU can start with the new firmware.

Result

You have updated the CPU online with a new firmware version.

The address and baud rate of the first interface remain retentive. All other parameters were reset during the firmware update.

9.4 Backup of project data to a Micro Memory Card

Function principles

Using the **Save project to Micro Memory Card** and **Retrieve project from Micro Memory Card** functions, you can save all project data to a SIMATIC Micro Memory Card, and retrieve these at a later time. The SIMATIC Micro Memory Card can be located in a CPU or in the Micro Memory Card programming adapter of a PG or PC.

Project data is compressed before it is saved to a SIMATIC Micro Memory Card, and uncompressed on retrieval.

Note

In addition to project data, you may also have to save your user data to the SIMATIC MMC. Always select a SIMATIC Micro Memory Card with sufficient memory capacity.

A message warns you of insufficient memory capacity on your SIMATIC Micro Memory Card.

The volume of project data to be saved corresponds with the size of the project's archive file.

Note

For technical reasons, you can only transfer the entire contents (user program and project data) using the **Save project to Micro Memory Card** action.

Handling the functions

How you use the **Save project to memory card** / **Retrieve project from memory card** functions depends on the location of the SIMATIC micro memory card:

- When the SIMATIC MMC is inserted in the MMC slot, select a project level (for example, CPU, programs, sources or blocks) which is uniquely assigned to the CPU from the project window in SIMATIC Manager. Select the **PLC > Save project to Memory Card** or **PLC > Retrieve project from Memory Card** menu command. The program now writes all configuration data to the SIMATIC Micro Memory Card, or retrieves these data from the card.
- If project data are not available on the currently used programming device (PG/PC), you can select the source CPU from the "Accessible nodes" window. Select **PLC > Display accessible nodes** command to open the "Accessible nodes" window. Select the connection/CPU that contains your project data on SIMATIC Micro Memory Card. Now select menu command **Retrieve project from Memory Card.**
- If the SIMATIC MMC is located in the MMC programming unit of a PG or PC, open the "S7 memory card window" using the **File > S7 Memory Card > Open command.** Select the **PLC > Save project to Memory Card** or **PLC > Retrieve project from Memory Card** menu command. to open a dialog in which you can select the source or target project.

Note

Project data can generate high data traffic. Especially in RUN mode with read/write access to the CPU, this can lead to waiting periods of several minutes.

Sample application

When you assign more than one member of your service and maintenance department to perform maintenance tasks on a SIMATIC PLC, it may prove difficult to provide quick access to current configuration data to each staff member.

However, CPU configuration data available locally on any CPU that is to be serviced can be accessed by any member of the service department. They can edit these data and then release the updated version to all other personnel.

9.5 Resetting to the Delivery State

Delivery state of the CPU

Default values set at the CPU properties:

Table 9- 3 Properties of the CPU in the delivery state

Properties	Value
MPI address	2
MPI baud rate	187,5 kbit/s
Retentive bit memories, timers and counters	All retentive bit memories, timers and counters are deleted
Retentive range set for bit memories, timers and counters	Default setting (16 memory bytes, no timers, and 8 counters)
Contents of the diagnostics buffer	deleted
IP address	Not available
Device name	Not available
Operating hours counter	0
Time	01.01.1994 00:00:00

Procedure

Proceed as follows in order to reset a CPU to the delivery state via the mode selector switch:

1. Switch off the supply voltage.
2. Remove the SIMATIC Micro Memory Card from the CPU.
3. Hold the mode selector switch in the MRES setting and switch the supply voltage on again.
4. Wait until LED lamp image 1 from the subsequent overview is displayed.
5. Release the mode selector switch, set it back to MRES within 3 seconds and hold it in this position.
6. Wait until LED lamp image 2 from the next overview is displayed.
   This lamp image lights up for approximately five seconds, that is for the duration of RESET. During this period you can abort the resetting procedure by releasing the mode selector switch.
7. Wait until LED lamp image 3 from the subsequent overview is displayed and release the mode selector switch again.

The CPU is now reset to the delivery state. It starts without buffering (all LEDs are lit) and changes to the STOP mode.

Lamp images while the CPU is being reset

While you are resetting the CPU to the delivery state, the LEDs light up consecutively in the following lamp images:

Table 9- 4 Lamp images

LED	Color	Lamp image 1	Lamp image 2	Lamp image 3
STOP	Yellow	○	□	□
RUN	Green	○	□	□
FRCE	Yellow	○	□	□
5 VDC	Green	Δ	Δ	Δ
SF	Red	□	○	Δ
BFx	Red	□	□	□
Δ = LED is lit □ = LED is dark ○ = LED flashes at 0.5 Hz				

Note

When removing a PROFINET CPU for use at a different location, or when putting it on shelf, always restore the CPU to factory settings since its IP address and device name are usually stored in retentive memory.

9.6 Module installation/removal

Installation and wiring rules

The table below shows you points to follow when wiring, installing or removing S7-300 modules.

Rules governing	... Power supply	... CPU	... SM/FM/CP
Blade width of the screwdriver	3.5 mm (cylindrical design)		
Tightening torque • Fixing modules to the mounting rail • Connecting cables	 from 0.8 Nm to 1.1 Nm from 0.5 Nm to 0.8 Nm		 from 0.8 Nm to 1.1 Nm –
POWER OFF when replacing the ...	Yes		Yes
S7-300 operating mode when replacing ...	–		STOP
Load voltage OFF when replacing the ...	Yes		Yes

Initial situation

The module you want to replace is still mounted and wired. You want to install the same type of module.

⚠ WARNING
Disturbances can corrupt data if you insert or remove S7-300 modules while data are being transferred via the integrated interface of your CPU. You should never replace any modules of the S7-300 while data traffic is active at an integrated interface. If you are not certain whether or not data transfer is active on the interface, unplug the connector at the interface before you replace the module.

Removing the module (SM/FM/CP)

To remove the module:

Step	20-pin front connector	40-pin front connector
1	Switch the CPU to STOP.	
2	Switch off the load voltage to the module.	
3	Remove the labeling strip from the module.	
4	Open the front door.	
5	Unlock the front connector and remove it.	
	To do so, press down the unlocking mechanism with one hand and pull out the front connector at the grips using the other hand.	Remove the fixing screw from the middle of the front connector. Pull the front connector out, holding it at the grips.
6	Undo the module fixing screw(s).	
7	Swing the module out.	

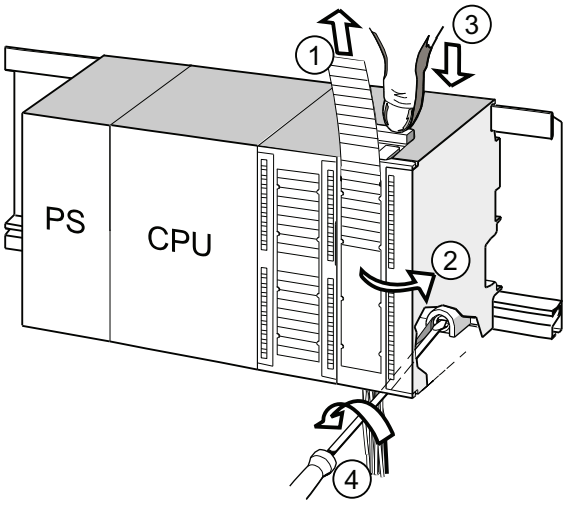

Number	Description
①	Remove labeling strips.
②	Open module.
③	Press unlocking mechanism/loosen mounting screw and pull out front connector.
④	Remove mounting screw of module and swing module out.

Removing the front connector coding from the module

Remove the top part of the front connector coding from the new module to be installed.

Reason: This part is already inserted in the wired front connector.

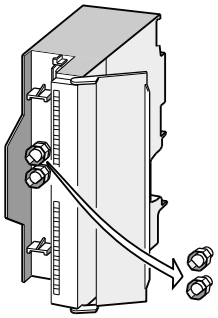

Installing a new module

To install the new module:

1. Hang in a new module of same type.
2. Swivel the module down into place.
3. Screw-tighten the module.
4. Slide the labeling strips into the module.

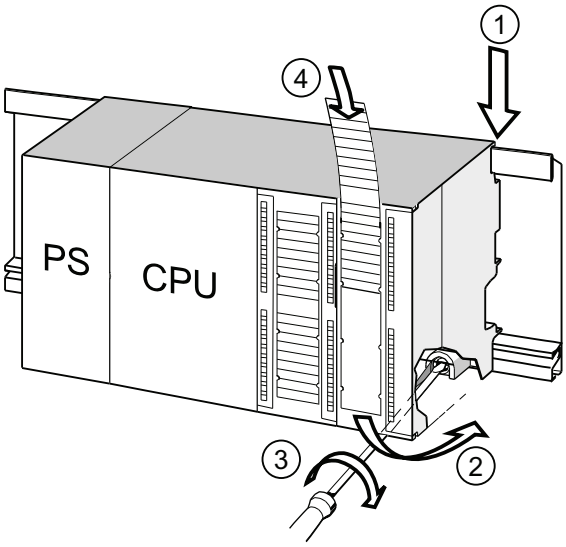

Number	Description
①	Hang module onto rail
②	Swivel module downward
③	Screw-tighten the module
④	Insert labeling strips

Removing the front connector coding from the front connector

To rewire a "used" front connector for a different module, remove the front connector coding from the front connector:

Simply push the front connector coding out of the front connector using a screwdriver.

Reinsert the top part of the front connector coding into the front connector coding of the old module.

Putting a new module into service

Proceed as follows to put the new module into service:

1. Open the front door.
2. Reinstall the front connector.
3. Close the front panel.
4. Switch the load voltage back on.
5. Reset the CPU to RUN mode.

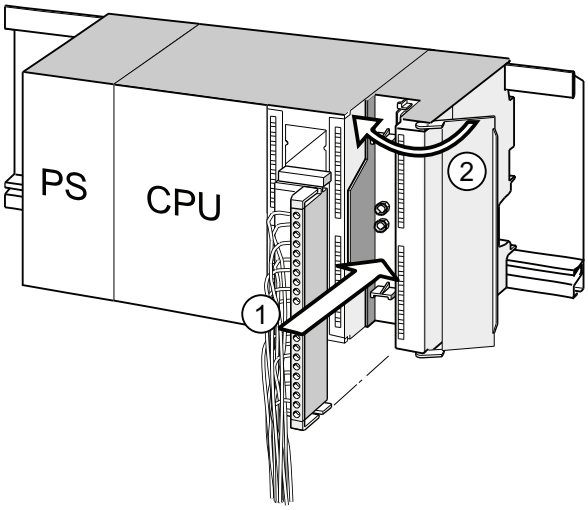

Number	Description
①	Move the front connector into operating position
②	Close front panel

Reaction of the S7-300 after module replacement

After a module replacement, the CPU switches to run mode, provided no error has occurred. If the CPU stays in STOP mode, you can view the cause of error in STEP 7 (see the *Programming with STEP 7* user manual).

9.7 Digital output module: Changing fuses

Fuses for digital outputs

The digital outputs of the following digital output modules are short-circuit protected by fusing of the channel groups:

- Digital output module SM 322; DO 16 x AC 120 V
- Digital output module SM 322; DO 8 x AC 120/230 V

System check

Eliminate the causes of fuse tripping.

Replacement fuses

If replacement is required, you can use the following fuses:

- 8 A, 250 V fuse
  - Wickmann 19 194-8 A
  - Schurter SP001.013
  - Littlefuse 217.008
- Fuse holder
  - Wickmann 19 653

WARNING

Injuries or damages can result from improper handling of the digital modules.
There are dangerous voltages > 25 VAC or > 60 VDC beneath the covers to the right of the module.
Before you open these covers, make sure that you have either unplugged the front connector from the module or isolated the module from power.

WARNING

Injuries or damages can result from improper handling of front connectors.
Dangerous voltages > 25 VAC or > 60 VDC may be present at the pins when you pull or insert the front connector during operation.
If such voltages are present at the front connector, only qualified electricians or personnel instructed by such specialists may replace live modules, in such a way that they avoid touching the module pins in the process.

Location of the fuses on the digital output module

Digital output modules are equipped with 1 fuse per channel group. The fuses are located at the left side of the digital output module. The following figure shows you where to find the fuses on the digital output modules.

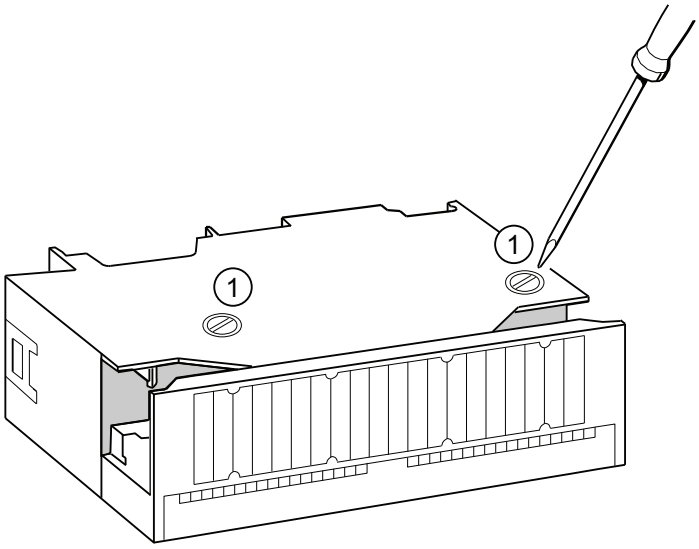

Replacing fuses

The fuses are located at the left side of the module. Replace the fuses as follows:

1. Switch the CPU to STOP.
2. Switch off the load voltage of the digital output module.
3. Remove the front connector from the digital output module.
4. Loosen the fixing screw of the digital output module.
5. Swing out the digital output module.
6. Remove the fuse holder from the digital output module ①.
7. Replace the fuse.
8. Screw the fuse holder back into the digital output module.
9. Reinstall the digital output module.

Debugging functions, diagnostics and troubleshooting 10

10.1 Overview

This chapter helps you to get acquainted with tools you can use to carry out the following tasks:

- Hardware/software error diagnostics.
- Elimination of hardware/software errors.
- Testing the hardware/software – for example, during commissioning.

Note

It would go beyond the scope of this manual to provide detailed descriptions of all the tools you can use for diagnostics, testing and troubleshooting functions. Additional notes are found in the relevant hardware/software manuals.

10.2 Reading out service data

Application (for CPUs ≥ V2.8)

In the case of a service, for example if the CPU signals the state "DEFECTIVE" (all LEDs blinking), you have the option of saving special information for analyzing the CPU state.

This information is stored in the diagnostic buffer and in the actual service data.

Select the “Target system -> Save service data” command to read and this information and save the data to a file to forward to Customer Support.

Procedure

1. If the CPU is in the state "DEFECTIVE" (all LEDs blinking), switch the power supply off and on (power off/on).

   Result: The CPU is now in STOP mode.
2. As soon as the CPU goes to "STOP" mode, select the corresponding CPU with the menu command in the SIMATIC Manager: Target system > Available nodes".
3. Use the SIMATIC Manager menu command "Target system > Save service data" to save the service data.

   Result: A dialog box opens in which you specify the storage location and name of the two files.
4. Save the file.
5. Forward these files to Customer Support on request.

10.3 Identification and maintenance data of the CPU

Definition and properties

Identification and maintenance data (I&M) is information that is stored in a module for the purpose of providing you with support when:

- checking the system configuration
- locating modified plant hardware
- troubleshooting a plant

Identification data (I data) is information about the module (some of which may be printed on the module housing) such as the order and serial number.
I data is manufacturer´s information about the module. It is fixed and can only be read.

Maintenance data (M data) represent system-specific information such as the installation location. M data is created during configuration and written to the module.

I&M data can be used to identify modules uniquely on the network.

Reading and writing I&M data with STEP *7*

Read

- *STEP 7* returns I&M data in "Module status" ("General" and Identification" tab) and in "Accessible nodes" (detail view). See the STEP 7 Online Help.
- You can read I&M data by calling SFC51 in the user program. Declare the SSL parts list number and index at the input parameters of SFC51 (see the table below).
- CPUs which support reading of I&M data on the "Start page" and "Identification" page using the web server:

CPU	Firmware
CPU 314C-2 PN/DP	as of V3.3
CPU 315-2 PN/DP	as of V2.5
CPU 317-2 PN/DP	as of V2.5
CPU 319-3 PN/DP	as of V2.5

Write

You always require *STEP 7* HW Config to write M data of the modules.

Data you can enter in the course of configuration , for example:

- Name of the AS (station name)

  The station name is assigned in SIMATIC Manager when you create the station. The program generates a default station, for example, "SIMATIC 300(1)". You can always change this name.

- Data you can enter in STEP 7 HW Config, "CPU properties", "General" tab:
  - Name of the module

    HW Config assigns a default name
  - Plant ID of the module

    No default setting
  - Location identifier (LID) of a module

    No default setting

Reading the I&M data in the user program

In order to read I&M data of the CPU in the user program, define the SSL ID and index and read the corresponding SSL by calling SFC51. The table below shows the SSL IDs and associated indexes.

SSL partial lists with I&M data

The I&M data are available in the SSL partial lists at the defined indexes.

Table 10- 1 SSL partial lists with I&M data

SSL-ID W#16#…	Index W#16# …	Meaning
Module identification		
0111		an identification data record
	0001	Identification of the module The module order number and release version are stored here.
	0006	Identification of the basic software Returns information about the SW version of the module. (These identification data are identical to index 0001, as a basic software is not available for S7-300 CPUs.)
	0007	Identification of the basic firmware Indicates the firmware version of the module.

SSL-ID W#16#…	Index W#16# …	Meaning
Component identification		
011C		Component identification
	0001	Name of the AS Returns the name of the AS (station name).
	0002	Name of the module Returns the name of the module.
	0003	Plant ID of the module Returns a unique identifier for the module.
	000B	Location identifier (LID) of a module Returns the installation location of the module.

Reference

For detailed information about the structure an content of the SSLs, refer to the *System Software for S7-300/400, System and Standard Functions* Manual and to the *STEP 7 Online Help*.

I&M data of connected I/O

Information about the I&M data of I/O connected to the CPU is available in the manuals of the corresponding I/O modules.

10.4 Overview: Debugging functions

Determining addressed nodes with "Node flashing test" (for CPUs >= V2.2.0)

To identify the addressed node, select PLC > Diagnostics/Setting > Node/Flashing Test in STEP 7.

A dialog appears in which you can set the flashing time and start the flashing test. The directly connected node can be identified by a flashing FORCE LED. The flashing test cannot be performed if the FORCING function is active.

Debugging functions of the software: Monitoring and modifying variables, stepping mode

STEP 7 offers you the following testing functions you can also use for diagnostics:

- Monitoring and modifying variables

  Can be used for PG/PC monitoring of specific CPU or user program variables. You can also assign constant values to the variables.

- Testing with program status

  You can test your program by viewing the program status of each function (result of logical links, status bit) or the data of specific registers in real-time mode.

  For example, if you have selected the programming language LAD in STEP 7 for your presentation, the color of the symbol will indicate a closed switch or an active circuit.

  Note

  The STEP 7 testing function with program status extends the CPU cycle time!

  In STEP 7, you can set up a maximum cycle time increase for CPUs < V2.8. To do this, set process mode and the desired maximum cycle increase for the CPU parameters in STEP 7, HW Config.

  On CPUs ≥ V2.8, it is **not** necessary to adjust the maximum cycle time increase, since the influence on the cycle time can usually be neglected on these CPUs when process mode is set.

- Stepping mode

  When testing in stepping mode, you can process your program instructions in sequence (= single-step) and set breakpoints.

  This is **only** possible in testing mode and **not** in process mode.

  However, for CPUs ≥V2.8, the debugging and process mode parameters are not configured in HW Config since the changeover is made directly in the LAD/FBD/STL editor under "Debug/Mode".

  Note

  Number of blocks and breakpoints that can be monitored with status block

  - For CPUs ≥V2.8

    With these CPUs, you can monitor two blocks at the same time and set up to four breakpoints in stepping mode.

  - All other CPUs of the range of validity

    With these CPUs, you can monitor one block set up to two breakpoints in stepping mode.

Debugging functions of the software: Forcing variables

The Force function can be used to assign the variables of a user program or CPU (also: inputs and outputs) constant values which can not be overwritten by the user program.

For example, you can use it to jumper sensors or switch outputs permanently, irrespective of the user program.

DANGER

This could result in severe injury or even death, and damage to property.
Incorrect use of the Force function could result in death or severe injury, and damage to machinery or even the entire plant. Always follow the safety instructions in the *STEP 7 manuals*.

DANGER

Forcing with S7-300 CPUs
The force values in the process image of the **inputs** can be overwritten by write commands (such as T IB x, = I x.y, Copy with SFC, etc.) and by read I/O commands (such as L PIW x) in the user program, or by write PG/OP functions! Outputs initialized with forced values only return the forced value if not accessed by the user program via peripheral write instructions (TPQB x, for example) or by PG/OP write functions!
Always ensure that forced values in the I/O process image cannot be overwritten by the user program or PG/OP functions!

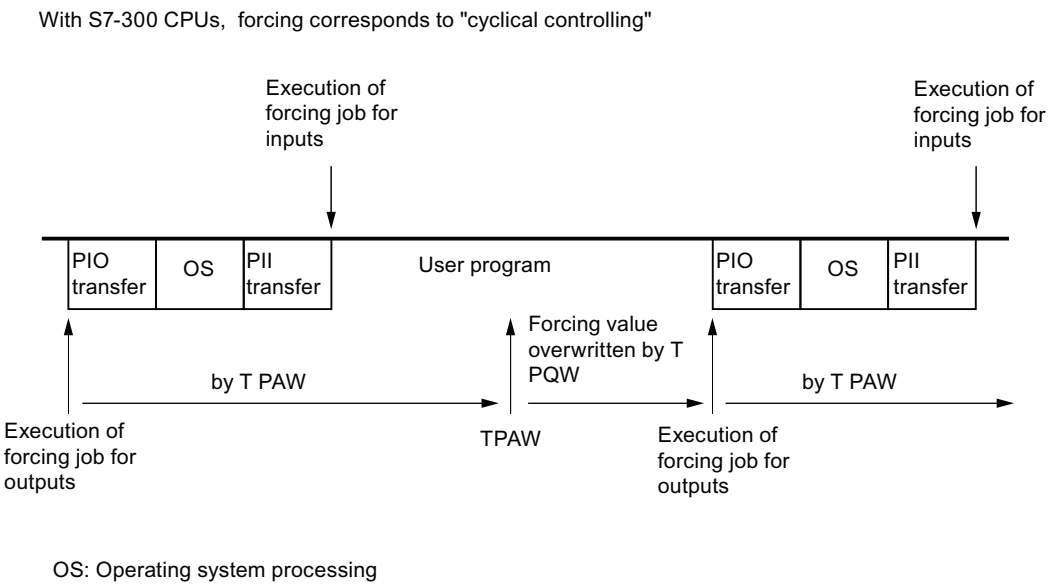

Figure 10-1 Principle of forcing in S7-300 CPUs

Differences between forcing and modifying variables

Table 10- 2 Differences between forcing and modifying variables

Characteristics/function	Forcing	Modifying variables
Memory bit (M)	-	Yes
Timers and counters (T, C)	-	Yes
Data blocks (DB)	-	Yes
Inputs and outputs (I, O)	Yes	Yes
Peripheral inputs (PI)	-	-
Peripheral outputs (PO)	-	Yes
User program can overwrite modify/ force values	Yes	Yes
Maximum number of force values	10	-
Power off retentive	Yes	No

Note

Forcing process image partitions

It is not possible to force inputs and outputs of the process image partition.

Reference

Details on debugging functions of the software are available in the *STEP 7 Online Help* and in the *Programming with STEP 7* Manual.

For additional information on the cycle times, please refer to the "Cycle time" chapter.

10.5 Overview: Diagnostics

Introduction

Especially in the commissioning phase of a system, errors can occur. Tracking these errors might be a time-consuming effort, because errors can occur both on the hardware and software side. Here, the multitude of testing functions ensures commissioning without problems.

Note

Errors during **operation** are almost always a result of faults or damage to the hardware.

Type of error

Errors the S7 CPUs can recognize and to which you can react with the help of organization blocks (OBs) can be split into the following categories:

- Synchronous error: Errors you can relate to a specific point in the user program (error when accessing a peripheral module, for example).
- Asynchronous error: Errors you can **not** relate to a specific point in the user program (cycle time exceeded, module error, for example).

Troubleshooting

Programming with foresight and, above all, knowledge and proper handling of diagnostic tools puts you into an advantageous position in error situations:

- You can reduce the effects of errors.
- It makes it easier for you to locate errors (by programming error OBs, for example).
- You can limit downtimes.

Diagnostics with LED display

SIMATIC S7 hardware offers diagnostics with LEDs.

Table 10- 3 These LEDs are implemented in three colors:

LED color	State of CPU	Example
Green	Regular operation	Power is on
Yellow	Non-regular operating status	Forcing is active
Red	Fault	Bus error
LED flashing	Special event	CPU memory reset

Table 10- 4 Operation of the LEDs on PROFINET differs as follows compared to the table above:

LED designation and color			Meaning
LINK Color: Green	RX/TX Color: Yellow	LINK/RX/TX Color: Green/yellow	
Off	Off	Off	No other device is connected with the integrated PROFINET interface of the CPU.
On	Off	Green	Another device (in most cases a switch) is connected to the integrated PROFINET interface of the CPU, and the physical connection is in place. No activity: No data is transferred via the integrated PROFINET interface of the CPU.
On	On	Yellow	Activity: Data are transferred via the integrated PROFINET interface of the CPU. Note: The LED flickers when low data volumes are transferred.

Reference

Notes on diagnostics of I/O modules capable of diagnostics are found in the relevant Manual.

Diagnostic buffer

If an error occurs, the CPU writes the cause of error to the diagnostic buffer. In STEP 7 you use the programming device to read the diagnostic buffer. This location holds error information in plain text.

Other modules capable of diagnostics can be equipped with their own diagnostic buffer. In STEP 7 (HW Config -> Diagnosing hardware), you can use the programming device to read this buffer.

Diagnosable modules without diagnostic buffer write their error information to the CPU's diagnostic buffer.

The CPU responds to an error or interrupt event (for example, a diagnostics interrupt of an I/O module) by going into STOP, or you can also choose to respond to these events in the user program by means of error or interrupt OBs. For a diagnostics interrupt you would call OB82.

Diagnostics of field devices on PROFINET

Additional information:

- *PROFINET System Description* System Manual.
- *From PROFIBUS DP to PROFINET IO* Programming Manual

The topics in the next chapters are focused on the diagnostics of local or distributed modules on PROFIBUS.

Diagnostics with system functions

If the following CPUs are used, we recommend that you use the more user-friendly SFB 54 RALRM (called in diagnostic OB82) to evaluate the diagnostics from centralized or distributed modules or DP slaves:

CPU	As of firmware version
31xC, 312, 314, 315-2 DP	V2.0.0
314C-2 PN/DP	V3.3
315-2 PN/DP	V2.3.0
317-2 DP	V2.1.0
317-2 PN/DP	V2.2.0
319-3 PN/DP	V2.4.0

Additional options for diagnostics with system functions are listed below:

- Using **SFC 51** "RDSYSST" to read an SSL partial list or an extract thereof.
- Reading the diagnostic data (slave diagnostics) of a DP slave, using **SFC 13 "DPNRM_DG"**

  Every DP slave provides slave diagnostic data according to EN 50 170 Volume 2, PROFIBUS. You can use SFC 13 "DPNRM_DG" to read these diagnostic data. Error information is stored in hex code. Refer to the relevant module manual for information on the meaning of the read code.

  For example, the entry of the value 50H (= dual 0101 0000) in byte 7 of the slave diagnostics for the distributed I/O module ET 200B indicates a faulty fuse or missing load voltage in channel group 2 and 3.
- Reading data records by calling **SFC52** "RDREC"

  You can call SFC52 "RDREC" (read record) to read a specific data record from the addressed module. Data records 0 and 1 are especially suitable for reading diagnostic information from a diagnosable module.

  Data record 0 contains 4 bytes of diagnostic data describing the current state of a signal module. Data record 1 contains the 4 bytes of diagnostic data also stored in data record 0, plus module-specific diagnostic data.
- Reading out the start information of the current OB, using the **SFC 6** "RD_SINFO"

  Error information is also found in the start information of the relevant error OB.

  You can use SFC 6 "RD_SINFO" (read start information) to read the start information of the OB that was last called and not yet processed completely, and of the start-up OB that was last called.
- Triggering detection of the bus topology in a DP master system with the **SFC103** "DP_TOPOL"

  The diagnostics repeater improves the ability to locate faulty modules or an interruption on the DP cable when failures occur in ongoing operation. It operates in slave mode and is capable of logging faults based on the determination of the DP segment topology.

  You can use SFC103 "DP_TOPOL" to trigger the identification of the bus topology of a DP master system by the diagnostic repeater. The SFC 103 is described in the corresponding *STEP 7 Online Help* and in the *System Software S7300/400, System and Standard Functions* Reference Manual. The diagnostic repeater is described in the manual *Diagnostic Repeater for PROFIBUS DP*.

10.6 Diagnostics functions available in STEP 7

Diagnostics using the "Diagnosing Hardware" function

Locate the cause of a module error by viewing the online information on the module. You can locate the cause of an error in the user program cycle with the help of the diagnostic buffer and of the stack content. You can also check whether a user program will run on a specific CPU.

Hardware diagnostics give you an overview of the PLC status. In an overview representation, a symbol can display the error status of every module. A double-click on the faulty module opens detailed error information. The scope of this information depends on the specific module. You can view the following information:

- General information about the module (e.g. order number, version, designation) and the module status (e.g. malfunction).
- Display of module errors (e.g. channel errors) on central I/O devices, PROFIBUS DP slaves, or PROFINET IO devices.
- Display of messages from the diagnostic buffer.
- Maintenance information: Maintenance demanded and maintenance required
- The information also includes diagnostics data for the PROFINET interface.

For CPUs you can also view the following module status information:

- Cause of an error in the user program cycle.
- Indication of the cycle time (longest, shortest and last cycle).
- Options and utilization of MPI communication.
- Indication of performance data (number of possible I/O, memory bits, counters, timers and blocks).
- Diagnostics (e.g. network connection, communication diagnostics and statistics) of the PROFINET interface and ports

For details on diagnostic functions in STEP 7 and on procedures, refer to the *Programming with STEP 7 Manual and to the HW Config Online Help*.

10.7 Network infrastructure diagnostics (SNMP)

Availability

As an open standard, you can use any SNMP-based systems or software solutions for diagnostics in PROFINET.

Network diagnostics

SNMP (Simple Network Management Protocol) makes use of the connectionless UDP transport protocol. It consists of two network components, similar to the client/server model. The SNMP manager monitors the network nodes and the SNMP agents collect the various network-specific information in the individual network nodes and stores it in a structured form in the **MIB** (Management Information Base). This information allows a network management system to run detailed network diagnostics.

MIB

An MIB (Management Information Base) is a data base of a device. SNMP clients access this data base in the device. The S7 device family supports, among others, the following standard MIBs:

- MIB II, standardized in the RFC 1213
- LLDP MIB, standardized in the international standard IEE 802.1AB
- LLDP PNIO-MIB, standardized in the international IEC standard 61158-6-10

Detecting the network topology

LLDP (Link Layer Discovery Protocol) is a protocol that is used to detect the closest neighbors. It enables a device to send information about itself and to save information received from neighboring devices in the LLDP MIB. This information can be looked up via the SNMP. This information allows a network management system to determine the network topology.

Integrating HMI devices via the SNMP OPC server

Configuration of the OPC server is integrated in the STEP 7 hardware configuration application. The communication with the OPC server is carried out without an S7 connection. You therefore do not need to configure S7 connections.

Stations that have already been configured in the STEP 7 project can be transferred directly. As an alternative to STEP 7, the configuration can also be run with the NCM PC (included on the SIMATIC NET CD) or can be determined automatically and transferred to the project configuration.

Use of SNMP in the SIMATIC NET environment

SNMP-compliant devices from the SIMATIC NET family can be monitored and operated via a conventional standard Internet browser.

The management system known as web-based management offers a range of device-specific information (network statistics, status of redundant supply, for example).

Diagnostics with the SIMATIC NET SNMP OPC server

The SNMP-OPC-Server software facilitates diagnostics and parameter assignment actions on any SNMP device, even including HMI devices which cannot read SNMP variables from other devices.

The OPC server uses the SNMP protocol to exchange data with these devices.

All information can be integrated into OPC compatible systems such as the HMI system WinCC. This enables process and network diagnostics to be combined in the HMI system.

Uses of SNMP

SNMP can be used as follows:

- By users, to integrate network diagnostics into a central HMI/SCADA system using the SNMP OPC server
- By the IT administration of machines and plant owners to monitor their Industrial Ethernet network using standard network management systems.
- By the IT administration, to primarily monitor the office network, but often also the automation network using standard network management systems (for example, HP Open view).

Additional information

Information relating to SNMP in the network management standardization group can be found at Internet (http://www.snmp.org/).

Additional information on SNMP can be found on the Internet (http://www.profibus.com).

Additional information on SNMP OPC servers can be found on the Internet (http://www.automation.siemens.com/net/html_76/produkte/040_snmp.htm).

10.8 Diagnostics using status and error LEDs

10.8.1 Introduction

Diagnostics with LEDs is an initial tool for error localization. Usually, you evaluate the diagnostic buffer for further error localization.

The buffer contains plain text information on the error that has occurred. For example, you will find the number of the appropriate error OB here. You can prevent the CPU from going into STOP mode by generating this OB and downloading it to the CPU.

10.8.2 Status and error displays of all CPUs

Status and error displays

LED						Meaning
SF	MAINT	DC5V	FRCE	RUN	STOP	
Off	Off	Off	Off	Off	Off	No power supply to the CPU. Remedy: Check whether the power supply module is connected to mains and switched on.
Off	X	On	X	Off	On	The CPU is in STOP mode. Remedy: Start the CPU.
On	X	On	X	Off	On	The CPU is in STOP mode as a result of error. Remedy: refer to the tables below, evaluation of the SF LED
X	X	On	X	Off	Flashes (0.5 Hz)	The CPU requests memory reset.
X	X	On	X	Off	Flashes (2 Hz)	The CPU executes memory reset.
X	X	On	X	Flashes (2 Hz)	On	The CPU is in startup mode.
X	X	On	X	Flashes (0.5 Hz)	Flashes (0.5 Hz)	During transmission of the MC7 blocks from the load memory to the work memory, STOP and RUN flash at 0.5 Hz until STOP mode is reached.
X	X	On	X	Flashes (0.5 Hz)	On	The CPU was halted by a programmed break point. For details, refer to the *Programming with STEP 7* Manual.
On	X	On	X	X	X	Hardware or software error Remedy: refer to the tables below, evaluation of the SF LED

LED						Meaning
SF	MAINT	DC5V	FRCE	RUN	STOP	
X	On	X	X	X	X	For IRT mode of a PROFINET IO system: • Failure of the sync master in a sync domain • Synchronization loss at the own station (for example, due to sync master failure) • Synchronization loss at a connected PROFINET IO device (for example, due to sync master failure) Other PROFINET IO maintenance requirements (for example, excess attenuation of fiber-optic cables) For media redundancy (MRP): • Missing or interrupted connection between ring ports • Failure of an MRP client on the ring • If several redundancy managers exist
X	X	X	On	X	X	You have enabled the Force function. For additional information, refer to the *Programming with STEP 7* manual.
X	X	X	Flashes (2 Hz)	X	X	Node flashing test was activated.
Flashes	X	Flashes	Flashes	Flashes	Flashes	Your CPU has an internal system error. The procedure is as follows: 1. Set the mode selector switch to STOP. 2. Perform POWER ON/OFF. 3. Read the diagnostics buffer with STEP 7. 4. Read out the service data for CPUs ≥ V2.8 (see chapter "Reading/saving service data (Page 205)") 5. Contact your local SIEMENS partner.
Flashes (2 Hz)	Off	Off	Off	Off	Off	CPU without valid firmware Remedy: Update the firmware via Micro Memory Card, see chapter Firmware update using a Micro Memory Card (Page 192)
X: This status is irrelevant to the current CPU function.						

Reference

- Details on the OBs and on SFCs required for their evaluation can be found in the *STEP 7 Online Help* and in the Manual *System Software for S7-300/400 - System and Standard Functions*.

10.8.3 Evaluating the SF LED in the case of software errors

Evaluation of the SF LED (Software error)

Possible problem	CPU reaction	Possible remedies
TOD interrupt is enabled and triggered. However, the appropriate OB is not loaded. (Software/ parameter assignment error)	Call of OB85. CPU goes into STOP if OB85 is not loaded.	Load OB10 (OB number is apparent from the diagnostic buffer).
Start time of the enabled TOD interrupt was jumped, e.g. by advancing the internal clock.	Call of OB80. goes into STOP if OB80 is not loaded	Disable the TOD interrupt before you set the time-of-day with SFC 29.
Delay interrupt triggered by SFC 32. However, the appropriate OB is not loaded. (Software/parameter assignment error)	Call of OB85. CPU goes into STOP if OB85 is not loaded.	Load OB 20 or 21 (CPU 317 only) (the OB number can be viewed in the diagnostic buffer).
Process interrupt is enabled and triggered. However, the appropriate OB is not loaded. (Software/ parameter assignment error)	Call of OB85. CPU goes into STOP if OB85 is not loaded.	Load OB40 (OB number is apparent from the diagnostic buffer).
Status interrupt is generated, but the appropriate OB55 is not loaded.	Call of OB85. CPU goes into STOP if OB85 is not loaded.	Load OB55
Update alarm is generated, but the appropriate OB 56 is not loaded.	Call of OB85. CPU goes to STOP if OB 85 is not loaded.	Load OB56
Vendor-specific alarm is generated, but the appropriate OB57 is not loaded.	Call of OB85. CPU goes into STOP if OB85 is not loaded.	Load OB57
Access to missing or defective module upon updating the process image (software or hardware error)	Call OB 85 (depending on the configuration in HW Config). CPU goes into STOP if OB 85 is not loaded.	Load OB85, the start information of the OB contains the address of the relevant module. Replace the relevant module or eliminate the program error.
The cycle time was exceeded. Probably too many interrupt OBs called simultaneously.	Call of OB80. CPU goes into STOP if OB80 is not loaded. The CPU switches to STOP despite loaded OB80 if the doubled cycle time was exceeded without retriggering cycle time.	Extension of the cycle time (STEP 7 – Hardware configuration), changing the program structure. Remedy: Retrigger cycle time monitoring by calling SFC 43
Programming error • Block not loaded • Wrong block number • Wrong timer/counter number • Read/write access to wrong area • etc.	Calls OB121. CPU does not STOP if OB121 is loaded.	Eliminate the programming error. The STEP 7 testing function helps you to locate the error.
I/O access errors An error has occurred when module data was accessed	Calls OB122. CPU does not STOP if OB122 is loaded.	Check the addressing of the modules in HW Config or whether a module, a DP slave, or a PROFINET IO device has failed.
Global data communication error, such as insufficient length of the DB for global data communication.	Call of OB87. CPU goes into STOP if OB87 is not loaded.	Check global data communication in STEP 7. If required, correct the DB size.

Tip:

- You can use SFC 39 to disable all interrupts and asynchronous error events.

Note

The shorter the selected cyclic interrupt period, the more likely it is that cyclic interrupt errors will occur. You must take into account the operating system times of the CPU in question, the user program runtime and extension of the cycle time by active PG functions, for example.

Reference

Details on the OBs and on the SFCs required for their evaluation are available in the *STEP 7 Online Help* and in the *System Software for S7-300/400 - System and Standard Functions* Reference Manual.

10.8.4 Evaluating the SF LED in the case of hardware errors

Evaluation of the SF LED (Hardware error)

Possible problem	CPU reaction	Possible remedies
A module was removed or inserted while the system was in RUN.	CPU goes into STOP.	Screw-tighten the modules and restart the CPU.
A distributed module was removed or inserted on PROFIBUS DP while the system was in RUN.	Call of OB86. CPU goes into STOP if OB86 is not loaded. When the module is integrated by means of GSD file: Call of OB 82. CPU goes into STOP when OB 82 is not loaded.	Load OB86 or OB82.
A distributed module was removed or inserted on PROFINET IO while the system was in RUN.	Call of OB83. CPU goes into STOP if OB83 is not loaded. OB 86 is also called when one or several modules of an ET 200S (IO device) are removed or inserted while the system is in RUN. CPU switches to STOP if OB 86 is not loaded.	Load OB 83 and OB 86.
A diagnosable module reports a diagnostic interrupt.	Call of OB82. CPU goes into STOP if OB82 is not loaded.	Reaction to the diagnostic event, based on the module configuration.
Attempt to access a missing or faulty module. Loose connector (software or hardware error).	Call of OB85, if access was attempted during update of the process image (OB 85 call must be enabled accordingly in the parameters). Call of OB 122 during direct I/O access. CPU switches to STOP if the OB is not loaded.	Load OB 85, the start information of the OB contains the address of the relevant module. Replace the relevant module, tighten the plug or eliminate the program error.

Possible problem	CPU reaction	Possible remedies
Faulty SIMATIC MMC.	The CPU goes into STOP mode and requests memory reset.	Replace the SIMATIC MMC, reset CPU memory, transfer the program again, then set the CPU to RUN mode.
A port interconnection was configured, however, a partner is not available at the port, or an incorrect partner was detected.	A missing or incorrect partner device on the port of the PROFINET interface leads to a corresponding entry in the diagnostics buffer and message in the communication diagnostics of the port. If the call of an OB 82 for communication interrupts of the PROFINET interface is enabled in in HW Config, then OB 82 will be called if a relevant event occurs while the IM is in RUN mode.	Set up a connection to the correct partner.
The CPU is operated as intelligent device on an IO controller (which can also be a CPU) on a PROFINET IO subnet. One of the two communication partners goes into STOP mode (or is in STOP mode).	IO controller in RUN and intelligent device in STOP mode: • Direct I/O access to inputs/ outputs of the application transfer areas to intelligent devices leads to access errors (call of OB 122) in the IO controller. • If the application transfer areas are in the process image and you configured a call of OB 85 for process image transfer errors in the parameters, this OB 85 will be called. IO controller in STOP and intelligent device in RUN mode: • Direct I/O access to inputs/outputs of the user transfer areas to the controller leads to access errors (call of OB 122) in the intelligent device. • If the user transfer areas are in the process image and you configured a call of OB 85 for process image transfer errors in the parameters, this OB 85 will be called.	Load OB 85 or OB 122

Reference

Details on the OBs and on the SFCs required for their evaluation are available in the *STEP 7 Online Help* and in the *System Software for S7-300/400 - System and Standard Functions* Reference Manual.

10.8.5 Status and error indicators: CPUs with DP interface

Description of the BF, BF1 and BF2 LEDs

Table 10- 5 LEDs BF, BF1 and BF2

LED					Meaning
SF	5 VDC	BF	BF1	BF2	
On	On	On/flashes	-	-	PROFIBUS DP interface error. Remedy: See the table below
On	On	-	On/flashes	X	Error at the first PROFIBUS DP interface of CPU 317 or CPU 319-3 PN/DP. Remedy: See the table below.
On	On	-	X	On/flashes	Error at the second PROFIBUS DP interface of the CPU 317-2 DP or CPU 319-3 PN/DP. Remedy: See the tables below

Explanation of the State X:
The LED can assume the *On* or *Off* state. This status, however, is irrelevant for the current CPU function.

Table 10- 6 BF LED is lit

Possible problem	CPU reaction	Possible remedies
• Bus fault (hardware fault). • DP interface error. • Different transmission rates in multiple DP master mode. • If the DP slave / master interface is active: short-circuit on the bus. • With passive DP slave interface: transmission rate search, i.e. there are no other active nodes on the bus (a master, for example)	Call of OB 86, if the CPU is in RUN mode and communication between the DP master and DP slave functioned properly before the error occurred. CPU switches to STOP if OB 86 is not loaded.	• Check the bus cable for short-circuit or breaks. • Analyze the diagnostic data. Edit the configuration.

Table 10- 7 BF LED flashes

Possible problem	CPU reaction	Possible remedies
The CPU is DP master: • Failure of a connected station • At least one of the configured slaves cannot be accessed. • Incorrect configuration	Call of OB 86, if CPU is in RUN mode and operated DP slaves before the error occurred. CPU switches to STOP if OB 86 is not loaded.	Verify that the bus cable is connected to the CPU, or that the bus is not interrupted. Wait until the CPU has completed its startup. If the LED does not stop flashing, check the DP slaves or evaluate the diagnostic data for the DP slaves.
The CPU is active DP slave: Possible causes: • The watchdog time has elapsed. • PROFIBUS DP communication is down. • Wrong PROFIBUS address. • Incorrect configuration	Call of OB 86, if CPU is in RUN mode and communicated as a DP slave with the DP master before the error occurred. CPU switches to STOP if OB 86 is not loaded.	• Check the CPU. • Verify that the bus connector is properly seated. • Check for breaks in the bus cable to the DP master. • Check the configuration data and parameters.

Reference

Details on the OBs and on the SFCs required for their evaluation are available

- in the *STEP 7 Online Help*
- in the *System Software for S7-300/400, System and Standard Functions* Reference Manual

10.8.6 Status and error indicators: CPUs with PROFINET interface for the S7-300

Status and Error Indicators: PROFINET devices

Note

The RX and TX LEDs can also be grouped in one LED, e.g., as on CPU 317-2 PN/DP. The RX/TX LED on this device is located, for example, under the front cover.

LED	LED status			Description of the status
	Not lit	Flashes	Lit	
LINK	–	–	X	There is no connection between the PROFINET interface of your PROFINET device and a communication partner in the Ethernet (a switch, for example).
	–	X	–	A "Node flash test" initiated in SIMATIC Manager activates flashing of the LINK LED only for the IO devices. The LINK LEDs can also be set to flash on CPUs, for example, by calling the "Search network" function in HW Config (PLC → Ethernet → Edit Ethernet node → Search → Flash). Comment: On CPUs, the common "Node flash test" initiates flashing of the FORCE LED.
	X	–	–	The Ethernet connection between the PROFINET interface of the PROFINET device and the communication partner is down.
RX	–	–	X (flickers)	At the current time, data are being received from a communication partner on Ethernet via PROFINET interface of the PROFINET device.
	X	–	–	No data are currently received via the PROFINET interface.
TX	–	–	X (flickers)	Data are currently sent to a communication partner on Ethernet via the PROFINET interface of the PROFINET device.
	X	–	–	No data are currently transmitted via the PROFINET interface.
MAINT	X	–	–	There is currently no maintenance request pending.
	–	–	X	A maintenance request is pending
BF2 or BF3	–	–	X	Error on the PROFINET interface, communication no longer possible (for example, with a CPU as IO controller, when the connection to the switch is down) Remedy: See the table below
	–	X	–	The BF LED always flashes if the communication cannot be set up correctly to all devices on the PROFINET IO controller (for example, station failure of one or several IO devices). However, communication is always possible via a port of the PROFINET interface (link to a partner device is active). On a CPU that is operated as intelligent device, the BF LED keeps flashing until at least one controller has correctly set up communication with this I-device. Remedy: See the table below
	X	–	–	No error at the PROFINET interface

Remedy of faults at the PROFINET interface - BF2/BF3 LED is lit

Table 10- 8 BF2/BF3 LED is lit

Possible problem	Reaction based on the example of a CPU	Possible remedies
• Bus fault (no cable connection to a subnet/ switch) • Wrong transmission speed • Full duplex mode not set	Call of OB 86, if the CPU is in RUN mode and, before the error had occurred, operated the PROFINET IO devices which have now failed. CPU switches to STOP if OB 86 is not loaded.	• Check the bus cable for a short-circuit or break. • Check that the module is connected to a switch and not to a hub. • Check that data is being transmitted at 100 Mbit/s and in full duplex mode. • Analyze the diagnostic data. Reconfigure or correct the configuration.

Remedy of faults at the PROFINET interface of an IO controller - BF2/BF3 LED flashes

Table 10- 9 BF2/BF3 LED flashes at a PROFINET IO controller

Possible problem	Reaction based on the example of a CPU	Possible remedies
• Failure of a connected IO device • At least one of the assigned IO devices cannot be addressed • Incorrect configuration	Call of OB 86, if the CPU is in RUN mode and, before the error has occurred, operated the PROFINET IO devices which now failed. CPU switches to STOP if OB 86 is not loaded.	• Check that the Ethernet cable is connected to the module or whether the bus is interrupted. • Wait until the CPU has completed its startup. If the LED does not stop flashing, check the IO devices or evaluate its diagnostic information. • Verify that the configured device name matches its actually assigned name. • Check whether the connected IO devices have different device names and IP addresses.

Troubleshooting errors on the PROFINET interface of an I-device - BF2/BF3 LED flashes

Table 10- 10 BF2/BF3 LED flashes on an I-device

Possible problem	Reaction based on the example of a CPU	Possible remedies
In a configuration as intelligent device without IO subsystem:		
• Incorrect IP address. • Incorrect configuration • Incorrect parameter assignment • IO controller missing/ switched off, but there is an Ethernet connection. • In Shared I-Device mode: All configured IO controllers are not available/ switched off, but there is an Ethernet connection (link to a neighboring device established). • Incorrect or missing device name • The watchdog time has elapsed. • The CPU is an I-device and communication with the higher-level controller fails	Call of OB 86 if the CPU is in RUN mode and user data communication with the higher-level controller(s) fails. The CPU goes into STOP mode if OB 86 is not loaded. When the CPU is operated as Shared I-Device, the BF LED flashes only if communication with both higher-level controllers has failed.	• Check that the Ethernet cable is correctly connected. • Check whether the Ethernet cable to the controller is interrupted. • Check the configuration, parameter assignment, and particularly the IP addresses and device names. • Power up the IO controller. • Check whether the target configuration matches the actual configuration. • Check whether the hardware connection for communication is interrupted. • Wait until the CPU has completed its startup. If the LED does not stop flashing, check the IO controllers and evaluate the diagnostics buffers of the IO controllers and intelligent device.
Additional check for a configuration as intelligent device with IO subsystem:		
• Failure of a connected IO device • At least one of the assigned IO devices cannot be addressed • Incorrect configuration	Call of OB 86, if the CPU is in RUN mode and, before the error has occurred, operated the PROFINET IO devices which now failed. The CPU goes into STOP mode if OB 86 is not loaded.	• Check that the Ethernet cable is connected to the module or whether the bus is interrupted. • Wait until the CPU has completed its startup. If the LED does not stop flashing, check the IO devices, or evaluate their diagnostic information. • Verify that the configured device name matches its actually assigned name. • Check whether the connected IO devices have different device names and IP addresses.

10.8.7 Status and error indicators: PROFINET IO Devices

Troubleshooting errors on the PROFINET interface of an IO device and in mixed mode with IO controller/I-device - BF LED flashes

Table 10- 11 BF LED flashes on a PROFINET IO device

Possible problem	Possible remedies
• The IP address is incorrect • Incorrect configuration • Incorrect parameter assignment • IO controller not found/switched off, but there is an Ethernet connection. • In Shared I-Device mode: All configured IO controllers are not available or are switched off, but there is an Ethernet connection (link to a neighboring device established) • Incorrect or missing device name • The watchdog time has elapsed. • In IRT mode with "high performance": Connection to the sync master is down	• Check that the Ethernet cable is correctly connected. • Check whether the Ethernet cable to the controller is interrupted. • Check the configuration data and parameters. • On the IO device: Switch on the IO controller. • Check whether the expected configuration matches the actual configuration. • Check the physical communication connection for interruption

Tip: Identification of the PROFINET device in the cubicle

When they are first commissioned, PROFINET IO devices must be assigned a device name. In STEP 7/HW Config, you can make the LINK LED of a PROFINET IO device you are naming flash using **PLC >Ethernet > Assign device name** . This allows you, for example, to clearly identify a PROFINET IO device among several identical devices in a control cabinet.

Maintenance LED

This LED indicates that a maintenance request is pending, for example, loss of synchronization of the own station.

For additional information, refer to the STEP 7 online help.

10.9 Diagnostics of DP CPUs

10.9.1 Diagnostics of DP CPUs operating as DP Master

Evaluate diagnostics in the user program

The figure below illustrates the procedure for evaluating diagnostics data in the user program.

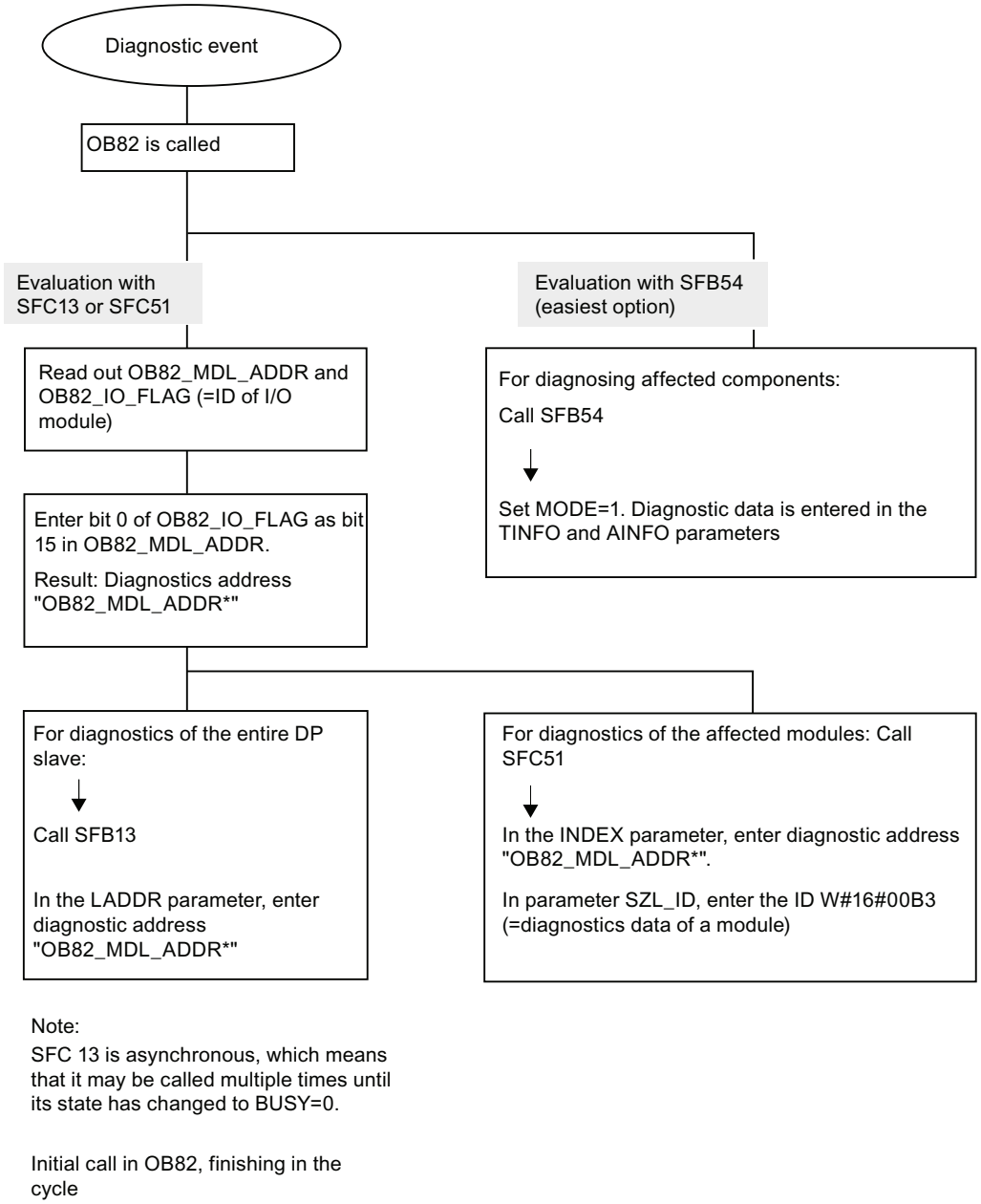

Diagnostic addresses for DP masters and DP slaves

For a CPU 31x-2, you assign diagnostic addresses for PROFIBUS DP. When configuring the project, make sure that the DP diagnostic addresses are assigned once to the DP master and once to the DP slave.

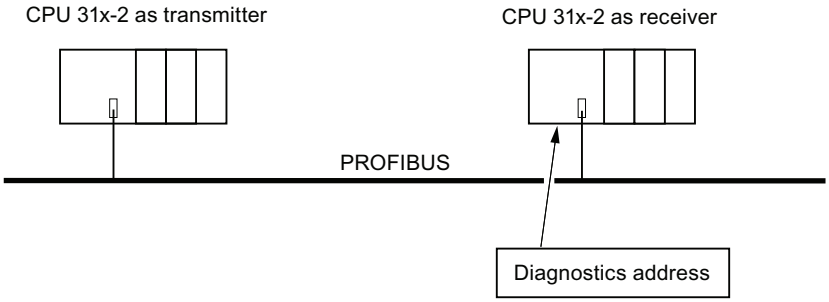

Description of the DP master configuration	Description of the DP slave configuration
When you configure the DP master, assign two different diagnostic addresses for an intelligent slave, that is, one diagnostic address for slot 0, and one for slot 2. Functions of those two addresses: • The diagnostic address for slot 0 is used to report in the master all events relating to the entire slave (station substitute), for example, node failure. • The diagnostic address for slot 2 is used to report events concerning this slot. For example, if the CPU is acting as an I-slave, it returns the diagnostic interrupts for operating mode transitions. From now on, these diagnostic addresses is referred to as *assigned to the DP master* . These diagnostic addresses are used by the DP master to obtain information about the status of the DP slave or about bus interruptions.	When you configure the DP slave, you also assign it a diagnostic address (in the associated DP slave project). Below, this diagnostic address is referred to as *assigned to DP slave*. This diagnostic address is used by the DP slave to obtain information on the status of the DP master or on bus interruptions.

Event detection

The table below shows how a CPU 31x-2 operating as DP master detects operating mode transitions of a CPU operating as DP slave, or data exchange interruptions.

Table 10- 12 Event detection of CPU 31x2 operating as DP master

Event	What happens in the DP master?
Bus interruption (short-circuit, connector removed)	• Call of OB 86 with the message **Station failure** (incoming event; diagnostic address of Slot 0 of the DP slave that is assigned to the DP master) • With I/O access: call of OB 122 (I/O access error)
DP slave: RUN → STOP	• Call of OB 82 with the message **Faulty module** (incoming event; diagnostic address of Slot 2 of the DP slave that is assigned to the DP master; variable OB82_MDL_STOP = 1)
DP slave: STOP → RUN	• Call of OB 82 with the message **Module OK** (outgoing event; diagnostic address of Slot 2 of the DP slave that is assigned to the DP master; variable OB82_MDL_STOP = 0)

Evaluation in the user program

The table below shows how you can, for example, evaluate RUN to STOP transitions of the DP slave in the DP master.

Table 10- 13 Evaluating RUN to STOP transitions of the DP slave in the DP master

In the DP master	In the DP slave (CPU 31x-2 DP)
Diagnostic addresses: (Example) Master diagnostic address =**1023** Slave diagnostic address =**1022** (Slot 0 of slave) (Diagnostic) address for "Slot 2" = **1021** (Slot 2 of slave)	Diagnostic addresses: (Example) Slave diagnostic address = **422** Master diagnostic address = irrelevant
The CPU calls OB82 with information including the following: • OB 82_MDL_ADDR: = **1021** • OB82_EV_CLASS: = B#16#39 (incoming event) • OB82_MDL_DEFECT: = Module fault Tip: The CPU diagnostic buffer also contains this information In the user program, you should also program SFC 13 "DPNRM_DG" for reading out DP slave diagnostic data.	CPU: RUN → STOP The CPU generates a DP slave diagnostics message frame

10.9.2 Reading out slave diagnostic data

The slave diagnostic data is compliant with EN 50170, Volume 2, PROFIBUS. Depending on the DP master, diagnostic data for all DP slaves conforming to standard can be read with STEP 7.

Diagnostic addresses for the receiving station with direct data exchange

For direct data exchange, you assign a diagnostic address in the receiving station:

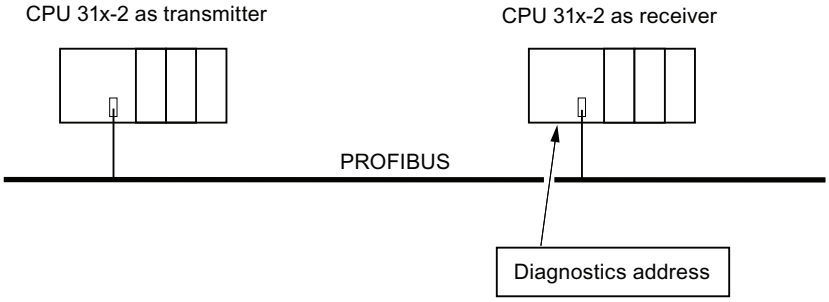

Figure 10-2 PROFIBUS DP diagnostics address

In this figure, you see that assign a diagnostic address to the receiving station in your configuration. The receiving station receives information about the status of the transmitting station or about a bus interruption by means of this diagnostic address.

Reading out the diagnostic data

The table below shows you how the various DP master systems can read diagnostic information from a slave.

Table 10- 14 Reading out diagnostic data in the master system, using STEP 5 and STEP 7

Automation system with DP master	Blocks or registers in STEP 7	Application	Additional Information
SIMATIC S7/M7	"DP Slave Diagnostics" tab	Output of slave diagnostic data in plain text to a STEP 7 user interface	Refer to the keyword *Hardware diagnostics* in the STEP 7 Online Help and in the *Programming with STEP 7* Manual
	SFB 54 "RALRM"	Reading additional interrupt information from a DP slave or local module from the relevant OB.	System and Standard Functions *Reference Manual*
	SFC13 "DP NRM_DG"	Reading out slave diagnostics (store in the data area of the user program)	System and Standard Functions *Reference Manual*

Automation system with DP master	Blocks or registers in STEP 7	Application	Additional Information
	SFC 51 "RDSYSST"	Reading SSL sublists. In the diagnostic interrupt, call SFC 51 with the SSL ID W#16#00B4 and then read out the SSL of the slave CPU.	System and Standard Functions *Reference Manual*
	SFB 52 "RDREC" and SFC 59 "RD_REC"	Reading the data records of S7 diagnostics (stored in the data area of the user program)	System and Standard Functions *Reference Manual*
	FB 125/FC 125	Evaluating slave diagnostic data	On the Internet (http://support.automation.siemens.com/WW/view/en/387257)
SIMATIC S5 with IM 308-C operating in DP master mode	FB 192 "IM308C"	Reading slave diagnostic data (store in the data area of the user program)	Distributed I/O System ET 200 *Manual*

Example for reading the slave diagnosis with FB 192 "IM308C"

This shows you an example of how to use FB 192 in the **STEP 5** user program to read out slave diagnostics data for a DP slave.

Assumptions regarding the STEP 5 user program

For this **STEP 5** user program it is assumed that:

- The IM 308-C operating in DP master mode uses the page frames 0 to 15 (number 0 of IM 308-C).
- The DP slave is assigned PROFIBUS address 3.
- Slave diagnostics data should be stored in DB 20. You may also use any other DB.
- Slave diagnostic data consists of 26 bytes.

STEP 5 user program

```
STL                                  Explanation
        :A      DB 30
        :SPA    FB 192
Name    :IM308C
DPAD    :       KH F800              //Default address range of IM 308-C
IMST    :       KY 0.3               //IM no. = 0, PROFIBUS address of the DP slave = 3
FCT     :       KC SD                //function: Read slave diagnostics
GCGR    :       KM 0                 //not evaluated
TYP     :       KY 0, 20             //S5 data area: DB 20
STAD    :       KF +1                //Diagnostic data starting at data word 1
LENG    :       KF 26                //Length of diagnostic data = 26 bytes
ERR     :       DW 0                 //Error code storage in DW 0 of DB 30
```

Example of reading out S7 diagnostic data with SFC 59 "RD REC"

Here you will find an example of how to use SFC 59 in the STEP 7 user program to read S7 diagnostics data records for a DP slave. The process of reading the slave diagnostics is similar for SFC 13.

Assumptions regarding the STEP 7 user program

Exceptions for this STEP 7 user program:

- Diagnostic data for the input module at address 200_H is to be read.
- Data record 1 is to be read out.
- Data record 1 is to be stored in DB 10.

STEP 7 user program

```
STL                                        Explanation
CALL SFC 59

REQ     :=TRUE                             //Request to read
IOID    :=B#16#54                          //Identifier of the address range, here the I/O input
                                           //Logical address of the module
LADDR   :=W#16#200                         //Data record 1 is to be read
RECNUM  :=B#16#1                           //An error code is output if an error occurs
RET_VAL :=MW2                              //Read operation not finished
BUSY    :=M0.0                             //DB 10 is target area for the read data record 1
RECORD  :=P# DB10.DBX 0.0 BYTE 240
```

Note:

Data is only returned to the target area if BUSY is reset to 0 and if no negative RET_VAL has occurred.

Diagnostic addresses

For a CPU 31x-2, you assign diagnostic addresses for PROFIBUS DP. When configuring the project, make sure that the DP diagnostic addresses are assigned once to the DP master and once to the DP slave.

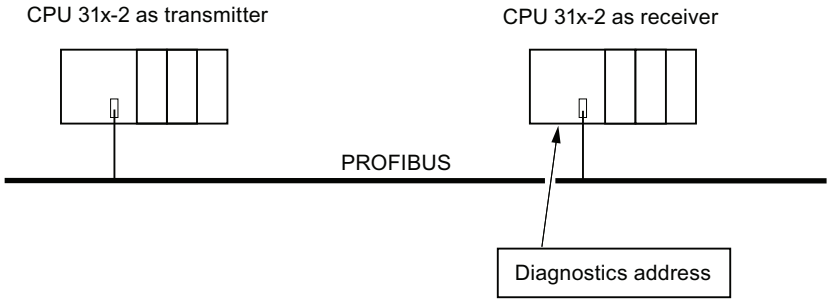

Figure 10-3 PROFIBUS DP diagnostics address

Description of the DP master configuration	Description of the DP slave configuration
When you configure the DP master, assign two different diagnostic addresses for an intelligent slave, that is, one diagnostic address for slot 0, and one for slot 2. Functions of those two addresses: • The diagnostics address for slot 0 is used to report in the master all events relating to the entire slave (station substitute), for example, node failure. • The diagnostics address for slot 2 is used to report events concerning this slot. For example, if the CPU is acting as an I-slave, it returns the diagnostic interrupts for operating mode transitions. From now on, these diagnostic addresses is referred to as *assigned to the DP master* . These diagnostic addresses are used by the DP master to obtain information about the status of the DP slave or about bus interruptions.	When you configure the DP slave, you also assign it a diagnostic address (in the associated DP slave project). Below, this diagnostic address is referred to as *assigned to DP slave*. This diagnostic address is used by the DP slave to obtain information on the status of the DP master or on bus interruptions.

Event recognition

The table below shows how CPU 31x-2 operating as DP slave recognized operating state transitions or data exchange interruptions.

Table 10- 15 Event recognition of CPUs 31x-2 operating in DP slave mode

Event	What happens in the DP slave?
Bus interruption (short circuit, connector removed)	• Calls OB86 with the message **Station failure** (incoming event; diagnostic address of the DP slave, assigned to the DP slave) • With I/O access: call of OB 122 (I/O access error)
DP master: RUN → STOP	• Calls OB82 with the message **Faulty module** (incoming event; diagnostic address of the DP slave assigned to the DP slave; variable OB82_MDL_STOP = 1)
DP master: STOP → RUN	• Call of OB82 with the message **Module OK.** (outgoing event; diagnostic address assigned the DP slave; variable OB82_MDL_STOP = 0)

Evaluation in the user program

The table below shows how you can, for example, evaluate RUN-STOP transitions of the DP master in the DP slave (see also the previous table).

Table 10- 16 Evaluating RUN-STOP transitions in the DP Master/DP Slave

In the DP master	In the DP slave
Diagnostic addresses: (Example) Master diagnostic address = **1023** Slave diagnostic address in the master system = **1022** (Slot 0 of slave) (Diagnostic) address for "Slot 2" = **1021** (Slot 2 of slave)	Diagnostic addresses: (Example) Slave diagnostic address = **422** Master diagnostic address = irrelevant
CPU: RUN → STOP	→ The CPU calls OB 82 with the following information, for example: • OB 82_MDL_ADDR: = 422 • OB82_EV_CLASS: = B#16#39 (incoming event) • OB82_MDL_DEFECT: = Module fault Tip: The CPU diagnostic buffer also contains this information

10.9.3 Interrupts on the DP Master

Interrupts with S7 DP master

Process interrupts from an intelligent slave with SFC 7

In the CPU 31x-2 operating in DP slave mode, you can trigger a user-defined process interrupt from the DP master from the user program.

The call of SFC 7 "DP_PRAL" triggers a call of OB 40 in the user program of the DP master. The SFC 7 allows you to forward interrupt information to the DP master in a double word. This information can then be evaluated in the OB40_POINT_ADDR variable in the OB40. The interrupt information can be programmed user-specific. You will find a detailed description of SFC7 "DP_PRAL" in the *System Software for S7-300/400, System and Standard Functions* Reference Manual.

Setting user-defined interrupts of Intelligent Slaves using SFB 75

In the CPU 31x-2 operating in DP slave mode, you can trigger user-defined interrupts from the user program in the DP master. SFB 75 "SALRM" is used to send a process or diagnostic interrupt from a slot in the transfer area (virtual slot) to the associated DP master from the user program on an intelligent slave. This starts the associated OB on the DP master.

Additional interrupt-specific information may be included. You can read this additional information in the DP master using SFB 54 "RALRM."

Interrupts with another DP master

When CPU 31x-2 operates with another DP master, an image of these interrupts is created in its device-specific diagnostic data. You have to post-process the relevant diagnostic events in the DP master's user program.

Note

In order to allow the evaluation of diagnostics and process interrupts by means of device-specific diagnostics using a different DP master, please note that:

The DP master should be able to save the diagnostics messages to its ring buffer. For example, if the DP master can not save the diagnostic messages, only the last incoming diagnostic message would be saved.

In your user program, you have to poll the relevant bits in the device-specific diagnostic data in cyclic intervals. Make allowances for the PROFIBUS DP bus cycle time, for example, to be able to poll these bits at least once and in synchronism to the bus cycle time.

With an IM 308-C operating in DP master mode, you cannot utilize process interrupts in device-specific diagnostics, because only incoming events are reported, rather than outgoing events.

10.9.4 Structure of the slave diagnostics when the CPU is operated as I-slave

Syntax of the diagnostics datagram for slave diagnostics

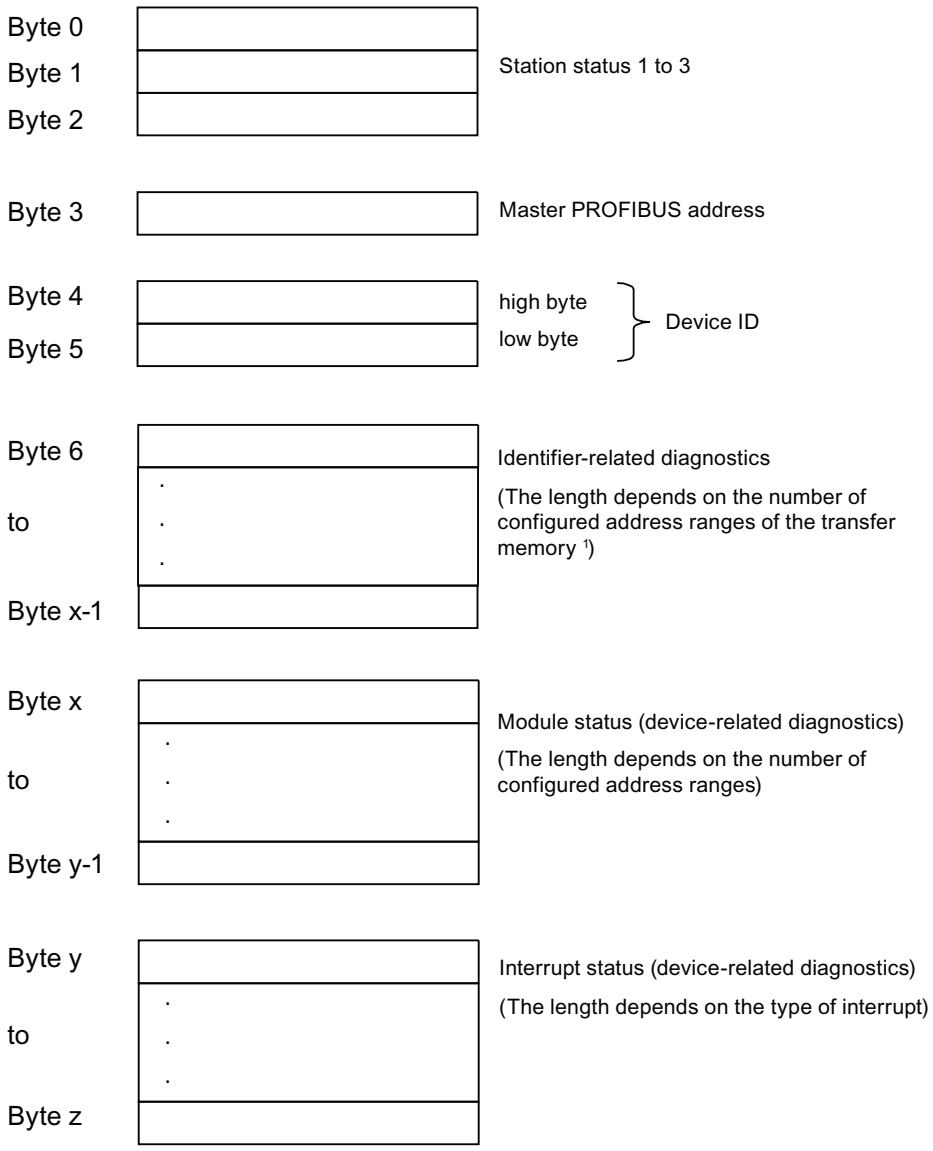

[1] Exception: In the case of an incorrect configuration from the DP master, the DP slave interprets 35 configured address ranges (46_H in Byte 6)

Figure 10-4 Structure of slave diagnostic data

Station Status 1

Table 10- 17 Structure of station status 1 (Byte 0)

Bit	Meaning	Remedy
0	**1:** DP slave cannot be addressed by DP master.	• Is the correct DP address set on the DP slave? • Are the bus connectors connected? • Does the DP slave have power? • Correct configuration of the RS485 Repeater? • Perform a reset on the DP slave.
1	**1:** DP slave is not ready for data exchange.	• Wait for the slave to complete start-up.
2	**1:** Configuration data sent by DP master to the DP slave is inconsistent with slave configuration.	• Was the software set for the correct station type or DP slave configuration?
3	**1:** Diagnostic interrupt, generated by a RUN-STOP transition on the CPU or by the SFB 75 **0:** Diagnostic interrupt, generated by a STOP-RUN transition on the CPU or by the SFB 75	• You can read the diagnostic data.
4	**1:** Function is not supported; for example, changing the DP address using software	• Check configuration data.
5	**0:** The bit is always "0".	• -
6	**1:** DP slave type inconsistent with software configuration.	• Was the software set for the right station type? (parameter assignment error)
7	**1:** DP slave was assigned parameters by a DP master other than the DP master currently accessing the DP slave.	• The bit is always 1 if, for example, you are currently accessing the DP slave via the programming device or a different DP master. The DP address of the parameter assignment master is in the "master PROFIBUS address" diagnostic byte.

Station Status 2

Table 10- 18 Structure of station status 2 (Byte 1)

Bit	Meaning
0	**1:** The DP slave requires new parameters and configuration.
1	**1:** A diagnostic message was received. The DP slave cannot resume operation until the error has been cleared (static diagnostic message).
2	**1:** This bit is always "1" if a DP slave exists with this DP address.
3	**1:** The watchdog monitor is enabled on this DP slave.
4	**1:** DP slave has received control command "FREEZE".
5	**1:** DP slave has received control command "SYNC".
6	**0:**The bit is always set to "0".
7	**1:** DP slave is disabled, that is, it has been excluded from cyclic processing.

Station Status 3

Table 10- 19 Structure of station status 3 (Byte 2)

Bit	Meaning
0 to 6	**0:** These bits are always "0"
7	**1:** There are more diagnostic messages than the DP slave can save. The DP master cannot enter all diagnostic messages sent from the DP slave in its diagnostic buffer.

Master PROFIBUS address

The "Master PROFIBUS address" diagnostic byte stores the DP address of the DP master:

- that has configured the DP slave and
- that has read and write access to the DP slave

Table 10- 20 Structure of the Master PROFIBUS address (byte 3)

Bit	Meaning
0 to 7	DP address of the DP master that has assigned parameters to the DP slave and has read/write access to that DP slave.
	FF_H: DP slave was not configured by a DP master

Device ID

The device ID is a manufacturer ID containing a code which specifies the type of the DP slave.

Table 10- 21 Structure of the device ID (bytes4, 5)

Byte 4	Byte 5	Device ID for the CPU
81_H	96_H	313C-2 DP
81_H	97_H	314C-2 DP
81_H	98_H	314C-2 PN/DP
81_H	76_H	315-2 DP
81_H	80_H	315-2 PN/DP
81_H	94_H	317-2 DP
81_H	82_H	317-2 PN/DP
81_H	84_H	319-3 PN/DP

Structure of identifier-related diagnostics of CPU 31x-2/CPU 319-3

Module diagnostics indicate the configured address range of intermediate memory that has received an entry.

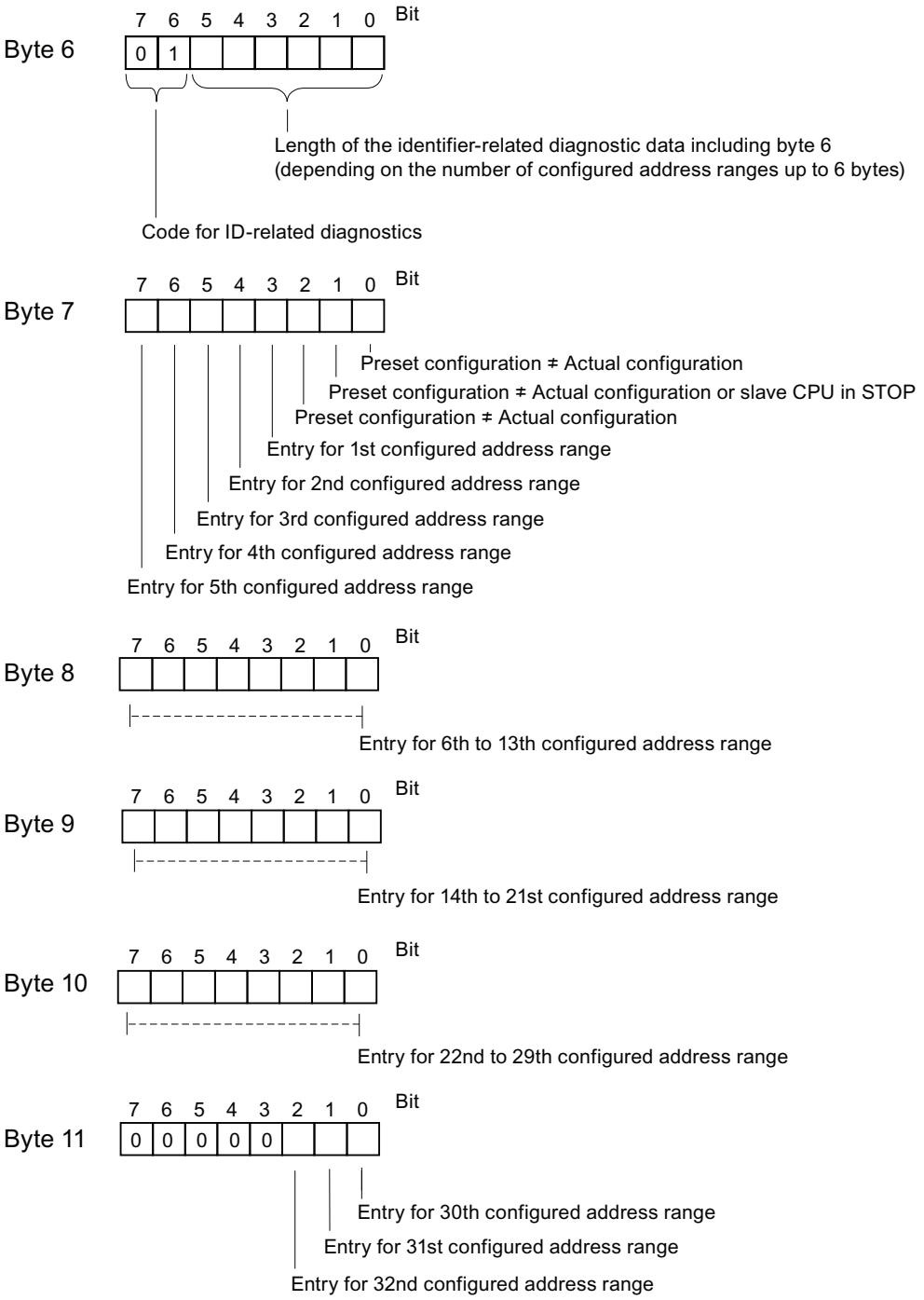

Figure 10-5 Identifier-related diagnostic data

Structure of the module status

The module status reflects the status of the configured address ranges, and provides detailed ID-specific diagnostics with respect to the configuration. The module status follows the identifier-related diagnostics and consists of a maximum of 13 bytes.

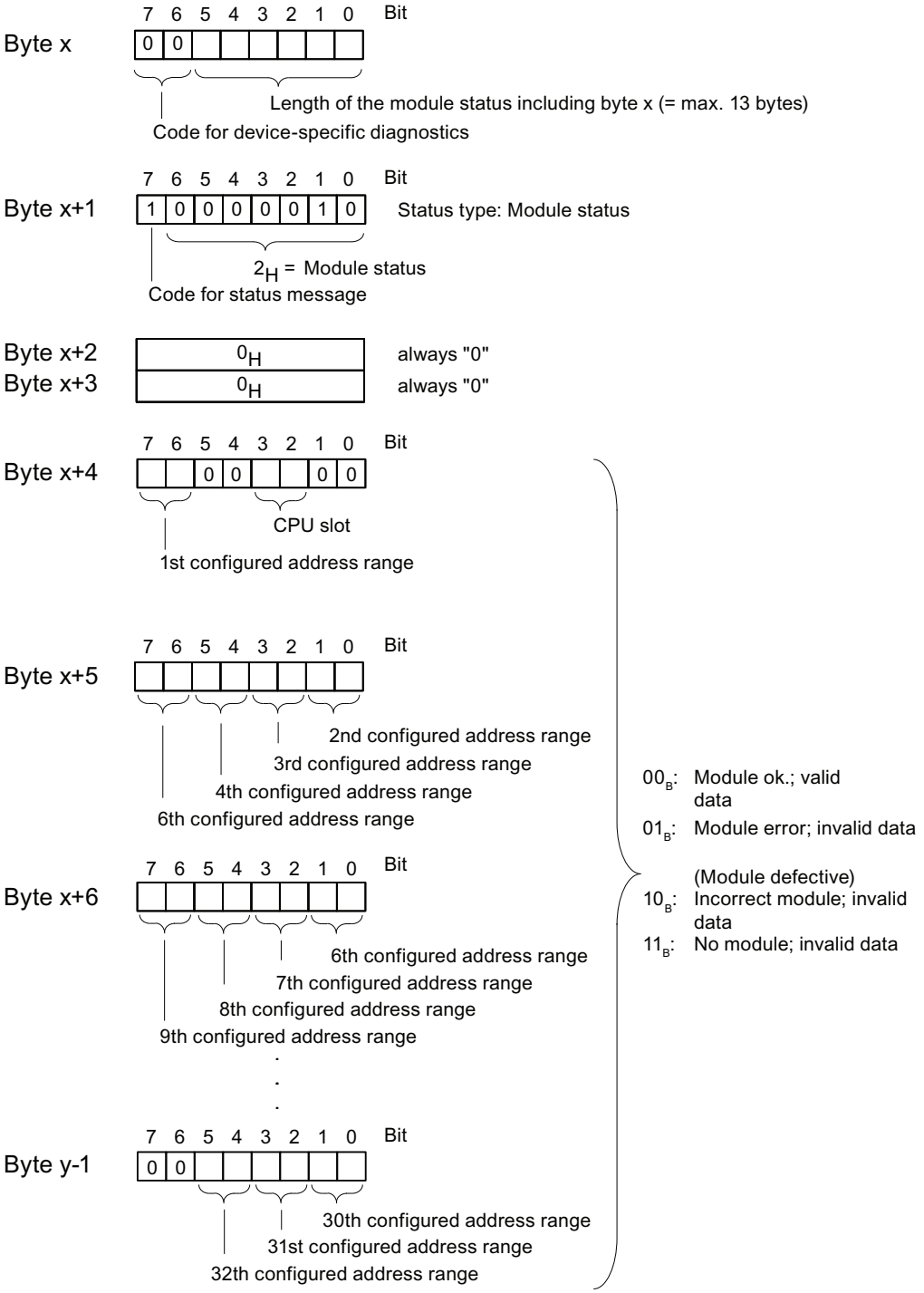

Figure 10-6 Structure of the module status for CPU 31xC

Structure of the interrupt status

The interrupt status of module diagnostics provides details on a DP slave. Device-related diagnostics starts at byte y and has a maximum length of 20 bytes.

The following figure describes the structure and content of the bytes for a configured address range of transfer memory.

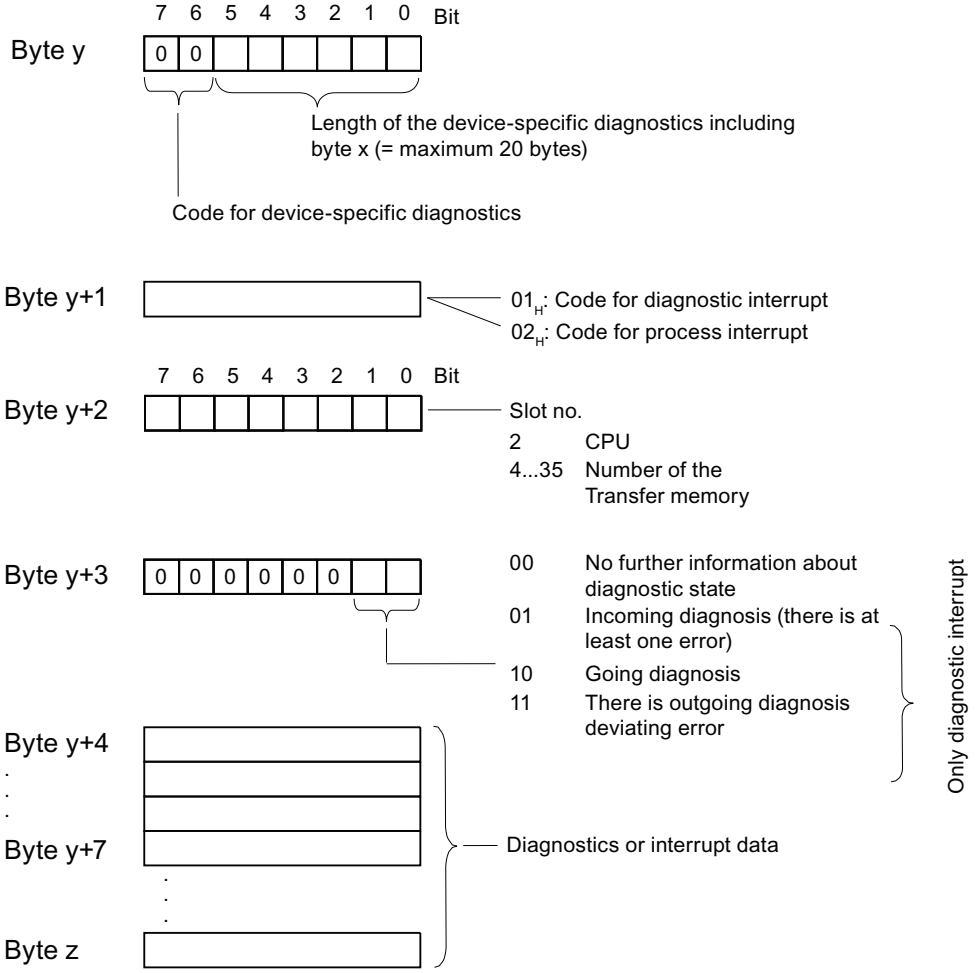

Example for Byte y+2:

CPU:	$=02_H$
1st address range:	$=04_H$
2nd address range:	$=05_H$
etc.	

Figure 10-7 Device-specific diagnostics

Structure of the interrupt data for a process interrupt (from byte y+4)

During a hardware interrupt (in byte y+1, code 02_H stands for hardware interrupt), as of byte y+4, the four bytes of interrupt information which you transferred in the I-slave using SFC 7 "DP_PRAL" or SFB 75 "SALRM" during generation of the hardware interrupt for the master are transferred.

Structure of the interrupt data when a diagnostic interrupt is generated in response to an operating status change by the intelligent slave (after byte y+4)

Byte y+1 contains the code for a diagnostic interrupt (01_H). The diagnostic data contains the 16 bytes of status information from the CPU. The figure below shows the allocation of the first four bytes of diagnostic data. The next 12 bytes are always 0.

The data in these bytes correspond to the contents of data record 0 of diagnostic data in STEP 7 (in this case, not all bits are used).

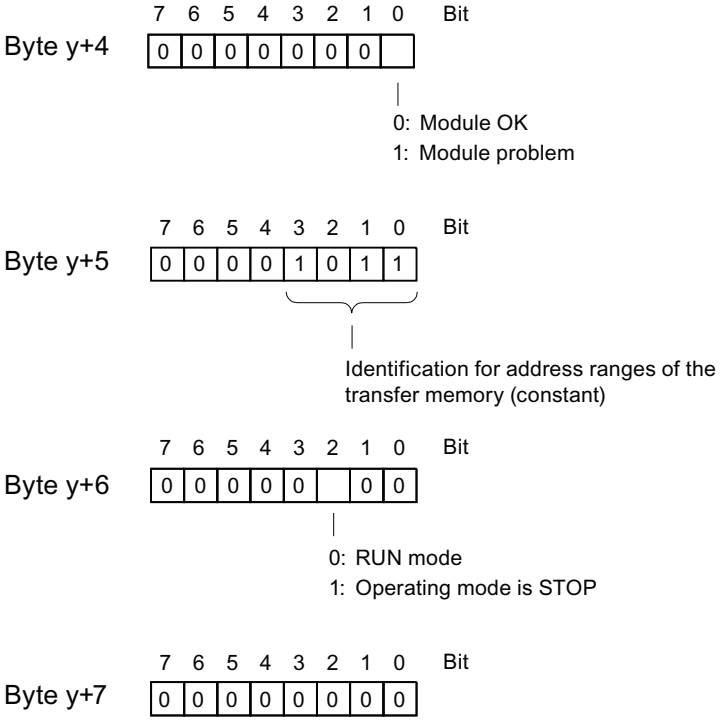

Note: Byte y+8 to Byte y+19 are always 0.

Figure 10-8 Bytes y+4 to y+7 for a diagnostic interrupt (operating status change by intelligent slave)

Structure of the interrupt data when a diagnostic interrupt is generated by SFB 75 on the I-slave (as of byte y+4)

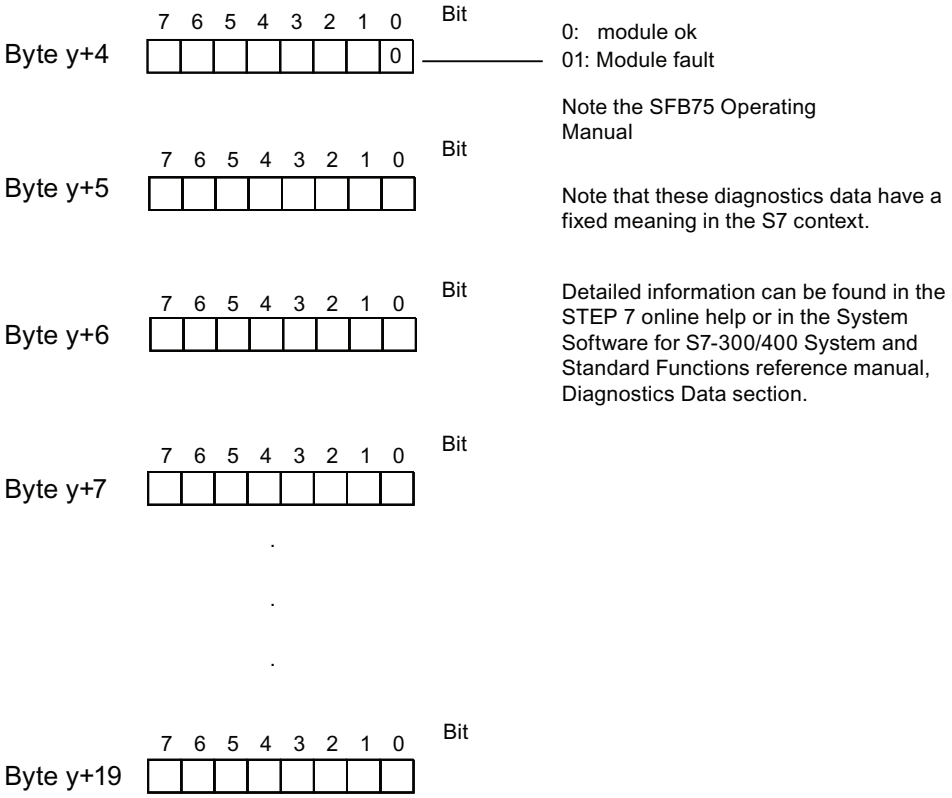

Figure 10-9 Bytes y+4 to y+19 for the diagnostics interrupt (SFB75)

10.10 Diagnostics of PROFINET CPUs

10.10.1 Diagnostics options of PROFINET IO

Diagnostics Concept

PROFINET IO supports you with an integrated diagnostics concept.
The diagnostics concept of PROFINET IO is similar to that of PROFIBUS DP.

The diagnostics functions allow you

- to react to an error (event-related diagnostics, evaluation of interrupts) or
- to check the current status of the AS (status-related diagnostics).

Overview of diagnostics information

You have three options of obtaining diagnostics information:

1. Diagnostics using status LEDs

Diagnostics option	Benefits	For detailed information refer ...
LEDs on a PROFINET interface	The LED displays indicate: • whether data are being sent or received • communication error.	this manual, chapter: Status and Error Indicators: CPUs with PROFINET interface for the S7-300

2. Diagnostics using the STEP 7 and NCM PC configuration and engineering tool

Diagnostics option	Benefits	For detailed information refer ...
Online diagnostics using a PG/PC/HMI	This allows you to evaluate the current status of your automation system.	the System Manual: PROFINET System Description, chapter: Support by STEP 7/NCM PC
Reporting system errors	Diagnostic information is output in plain text format to the PC / HMI.	the System Manual: PROFINET System Description, chapter: Support by STEP 7/NCM PC
Network diagnostics	The SNMP protocol allows you to determine the network infrastructure.	this manual, chapter: Network infrastructure diagnostics (SNMP)

3. Diagnostics in the STEP 7 user program

Diagnostics option	Benefits	For detailed information refer ...
Reading system status lists (SSLs)	The SSLs will help you to track down an error.	the System Manual: PROFINET System Description, chapter: Evaluation of Diagnostics in the User Program Reference manual: System software for S7-300/400 System and Standard Functions
Reading diagnostics data records	You can obtain detailed information about the type and source of faults by reading the diagnostic data records.	the System Manual: PROFINET System Description, chapter: Evaluation of Diagnostics in the User Program
Diagnostic interrupt	Can be used to evaluate diagnostics data in the user program.	the System Manual: PROFINET System Description, chapter: Evaluation of Diagnostics in the User Program

Evaluation of diagnostics information

PROFINET IO supports a vendor-independent structure of data records with diagnostics information. Diagnostics information is only generated for faulty channels.

The SSLs, SFB54 and SFB52 were enhanced to include information about the status of the PROFINET IO systems and the diagnostics information for an S7 user program:

- To read module status information of the PROFINET IO system, use SFC 51 (read system status lists) to read the information from SSL 0x0X96, for example.
- Call SFB52 (read data record) to read status-related diagnostics data records directly from a faulty module.
  - Status-related diagnostic data is error information, for example.
- Call SFB54 (read additional interrupt info) in the corresponding error OB to read event-related diagnostics data records from a module.
  - Event-related diagnostic data is interrupt information of the error OBs, for example.

Additional Information

Additional information about diagnostics and diagnostics data, on the structure of diagnostics data records and on SSLs for PROFINET is available in:

- the *From PROFIBUS DP to PROFINET IO* Programming Manual
- the *PROFINET System Description* System Manual
- the *System Software for S7-300/400, System and Standard Functions* Reference Manual
- in the *STEP 7 Online Help*

10.10.2 Maintenance

Enhanced maintenance concept

PROFINET devices support the comprehensive diagnostics and maintenance concept according to the IEC standard61158-6-10.

In addition to "ok" and "faulty" information, the PROFINET components can also display information for preventive maintenance when operating with STEP 7 V5.4 Servicepack 1 or higher.

Preventive maintenance is displayed, for example, if the attenuation of a fiber-optic cable deteriorates.

Maintenance information

Maintenance information returns maintenance priorities. The concept distinguishes between maintenance information based on two levels:

Maintenance information	Symbol in STEP 7	Status of the MAINT LED	Example
Maintenance required (maintenance required): Maintenance recommended	green wrench	Off	The attenuation on a fiber-optic conductor is becoming too high. Although operation is still possible, the transmission link may fail completely in the near future.
Maintenance request (maintenance demanded): Maintenance required	yellow wrench	Yellow	Failure of the synchronization master in a synchronization domain for the IRT operation of a PNIO system.

Additional Information

Additional information is available in:

- the *From PROFIBUS DP to PROFINET IO* Programming Manual
- *PROFINET System Description* system manual
- *CPU 31xC and CPU 31x, Manual, Technical Data*, chapter Webserver
- in the *STEP 7 Online Help*

See also

Diagnostics options of PROFINET IO (Page 247)

General technical specifications 11

11.1 Standards and certifications

Introduction

Contents of general technical specifications:

- standards and test values satisfied by modules of the S7-300 automation system
- test criteria of S7-300 modules.

Note

Information about the nameplate

You will find the current identifiers and approvals on the rating plate of the respective product.

Safety information

⚠ WARNING

Personal injury and damage to property may occur.

In potentially explosive environments, there is a risk of personal injury and damage to property if you remove S7-300 connectors in runtime.

In potentially explosive environments, always isolate the S7-300 before you remove any connectors.

⚠ WARNING

Explosion hazard

If you replace components, compliance with Class I, DIV. 2 could be compromised.

⚠ WARNING

This device is only appropriate for use in Class I, Div. 2, Group A, B, C, D, or in non-hazardous areas.

Test logos and their meaning

The section below describes the test logos attached to the module and explains their meaning.

CE Label

The S7-300 automation system satisfies requirements and safety-related objectives according to EC Directives listed below, and conforms with the harmonized European standards (EN) for programmable controllers announced in the Official Journals of the European Community:

- 2006/95/EC "Electrical Equipment Designed for Use within Certain Voltage Limits" (Low-Voltage Directive)
- 2004/108/EC "Electromagnetic Compatibility" (EMC Directive)
- 94/9/EC "Equipment and protective systems intended for use in potentially explosive atmospheres" (Explosion Protection Directive)

The EC declaration of conformity is held on file available to competent authorities at:

Siemens AG
Industry Sector
I IA AS R&D DH A
P.O. Box 1963
D-92209 Amberg

These files are also available for download on the Customer Support Internet pages, keyword "Declaration of Conformity".

UL approval

Underwriters Laboratories Inc., complying with

- UL 508 (Industrial Control Equipment)

CSA approval

Canadian Standards Association to

- C22.2 No. 142 (Process Control Equipment)

or

cULus approval

Underwriters Laboratories Inc., complying with

- UL 508 (Industrial Control Equipment)
- CSA C22.2 No. 142 (Process Control Equipment)

or

cULus HAZ. LOC approval

Underwriters Laboratories Inc., complying with

- UL 508 (Industrial Control Equipment)
- CSA C22.2 No. 142 (Process Control Equipment)
- UL 1604 (Hazardous Location)
- CSA C22.2 No. 213 (Hazardous Location)

APPROVED for use in
Class I, Division 2, Group A, B, C, D Tx;
Class I, Zone 2, Group IIC Tx

FM approval

Factory Mutual Research (FM) to
Approval Standard Class Number 3611, 3600, 3810
APPROVED for use in Class I, Division 2, Group A, B, C, D Tx;
Class I, Zone 2, Group IIC Tx

ATEX approval

In accordance with EN 60079-15 (Electrical Apparatus for Potentially Explosive Atmospheres; Type of Protection "n") and EN 60079-0 (Electrical apparatus for potentially explosive gas atmospheres - Part 0: General Requirements)

II 3 G Ex nA II T4..T6

WARNING

Personal injury and damage to property may occur.

In potentially explosive environments, there is a risk of personal injury and damage to property if you remove S7-300 connectors in runtime.

In potentially explosive environments, always isolate the S7-300 before you remove any connectors.

Tick mark for Australia and New Zealand

The S7-300 automation system meets requirements of standards to AS/NZS CISPR 16.

Note

The UL/CSA or cULus approvals for your product are specified by the identifiers on the rating plate.

IEC 61131

The S7-300 automation system satisfies requirements and criteria to IEC 61131-2 (Programmable Controllers, Part 2: Equipment requirements and tests).

Marine approval

Classification societies:

- ABS (American Bureau of Shipping)
- BV (Bureau Veritas)
- DNV (Det Norske Veritas)
- GL (Germanischer Lloyd)
- LRS (Lloyds Register of Shipping)
- Class NK (Nippon Kaiji Kyokai)

Use in industrial environments

SIMATIC products are designed for industrial applications.

Table 11- 1 Use in industrial environments

Field of application	Noise emission requirements	Noise immunity requirements
Industry	EN 61000-6-4: 2007	EN 61000-6-2: 2005

Use in residential areas

Note

The S7-300 is intended for use in industrial environments and can cause interference on radio/television reception if operated in residential areas.

To operate an S7-300 in a residential area, it's RF emission must comply with Limit Value Class B to EN 55011.

Suitable measures for achieving RF interference level Class B include, for example:

- S7-300 installation in grounded switch cabinets / cubicles
- Use of noise filters in the supply lines

11.2 Electromagnetic compatibility

Definition

Electromagnetic compatibility (EMC) is the ability of an electrical installation to function satisfactorily in its electromagnetic environment without interfering with that environment.

The S7-300 modules also satisfy requirements of EMC legislation for the European domestic market. Compliance of the S7-300 system with specifications and directives on electric design is prerequisite.

Pulse-shaped disturbance

The table below shows the electromagnetic compatibility of S7 modules in areas subject to pulse-shaped interference.

Pulse-shaped disturbance	Test voltage	corresponds with degree of severity
Electrostatic discharge according to IEC 61000-4-2.	Air discharge: ± 8 kV Contact discharge: ± 4 kV	3 2
Bursts (fast transient interference in accordance with IEC 61000-4-4)	2 kV (power supply lines) 2 kV (signal lines > 3 m) 1 kV (signal lines < 3 m)	3 3
High-energy single pulse (surge) to IEC 61000-4-5 External protective circuit required (see Lightning and overvoltage protection (Page 278))		3
• asymmetric coupling	2 kV (power supply lines) DC with protective elements 2 kV (signal / data line only > 3 m), with protective elements as required	
• symmetric coupling	1 kV (power supply lines) DC with protective elements 1 kV (signal / data line only > 3 m), with protective elements as required	

Additional measures

When connecting an S7-300 system to the public network, always ensure compliance with Limit Value Class B to EN 55022.

Sinusoidal disturbance

The table below shows the electromagnetic compatibility of the S7-300 modules in areas subject to sinusoidal interference.

- RF radiation

RF radiation to IEC 61000-4-3 Electromagnetic RF field, amplitude-modulated		corresponds with degree of severity
80 to 1000 MHz; 1.4 to 2 GHz	2.0 GHz to 2.7 GHz	3, 2, 1
10 V/m	1 V/m	
80 % AM (1 kHz)		

- RF coupling

RF coupling to IEC 61000-4-6	corresponds with degree of severity
0.15 to 80 MHz	3
10 V_{rms} unmodulated	
80 % AM (1 kHz)	
150 Ω source impedance	

Emission of radio interference

Electromagnetic interference emission to EN 55016: Limit value class A (measured at a distance of 10 m).

Frequency	Emitted interference
30 MHz to 230 MHz	< 40 dB (µV/m)Q
230 MHz to 1000 MHz	< 47 dB (µV/m)Q

Noise emission via AC mains to EN 55016: Limit value class A, Group 1.

Frequency	Emitted interference
0.15 to 0.5 MHz	< 79 dB (µV/m)Q < 66 dB (µV/m)M
0.5 MHz to 5 MHz	< 73 dB (µV/m)Q < 60 dB (µV/m)M
5 MHz to 30 MHz	< 73 dB (µV/m)Q < 60 dB (µV/m)M

11.3 Transportation and storage conditions for modules

Introduction

The shipping and storage conditions of S7-300 modules surpass requirements to IEC 61131-2. The data below apply to modules shipped or put on shelf in their original packing.

The modules are compliant with climatic conditions to IEC 60721-3-3, Class 3K7 (storage), and with IEC 60721-3-2, Class 2K4 (shipping.)

Mechanical conditions are compliant with IEC 60721-3-2, Class 2M2.

Shipping and storage conditions for modules

Type of condition	Permissible range
Free fall (in shipping package)	≤1 m
Temperature	From -40 °C to +70 °C
Barometric pressure	1080 hPa to 660 hPa (corresponds with an altitude of -1000 m to 3500 m)
Relative humidity	10% to 95%, no condensation
Sinusoidal oscillation to IEC 60068-2-6	5 - 9 Hz: 3.5 mm 9 - 150 Hz: 9.8 m/s^2
Shock to IEC 60068-2-29	250 m/s^2, 6 ms, 1000 shocks

11.4 Mechanical and climatic environmental conditions for S7-300 operation

Operating conditions

S7-300 systems are designed for stationary use in weather-proof locations. The operating conditions surpass requirements to DIN IEC 60721-3-3.

- Class 3M3 (mechanical requirements)
- Class 3K3 (climatic requirements)

Use with additional measures

The S7-300 may not be used under the conditions outlined below without taking additional measures:

- At locations with a high degree of ionizing radiation
- In aggressive environments caused, for example, by
  - The development of dust
  - Corrosive vapors or gases
  - Strong electric or magnetic fields
- In installations requiring special monitoring, for example
  - Elevators
  - Electrical plants in potentially hazardous areas

An additional measure could be an installation of the S7-300 in a cabinet or housing.

Mechanical environmental conditions

The table below shows the mechanical environmental conditions in the form of sinusoidal oscillations.

Frequency band	Continuous	Infrequently
$10 \leq f \leq 58$ Hz	0,0375 mm amplitude	0.75 mm amplitude
$58 \leq f \leq 150$ Hz	0,5 g constant acceleration	1 g constant acceleration

Reducing vibrations

If your S7-300 modules are exposed to severe shock or vibration, take appropriate measures to reduce acceleration or the amplitude.

We recommend the installation of the S7-300 on damping materials (for example, rubber-bonded-to-metal mounting.)

Test of mechanical environmental conditions

The table below provides important information with respect to the type and scope of the test of ambient mechanical conditions.

Condition tested	Test Standard	Comment
Vibration	Vibration test to IEC 60068-2-6 (sinusoidal)	Type of oscillation: Frequency sweeps with a rate of change of 1 octave/minute. 5 Hz ≤ f ≤ 9 Hz, 3.5 mm constant amplitude 9 Hz ≤ f ≤ 150 Hz, 1 g constant acceleration Duration of oscillation: 10 frequency sweeps per axis at each of three vertically aligned axes
Shock	Shock, tested to IEC 60068-2-27	Type of shock: Half-sine Shock intensity: 15 g peak value, 11 ms duration Direction of shock: 3 shocks in each direction (+/-) at each of three vertically aligned axes

Climatic environmental conditions

The S7-300 may be operated on following environmental conditions:

Environmental conditions	Permissible range	Comments
Temperature: horizontal mounting position: vertical mounting position:	 0°C to 60 °C 0°C to 40 °C	-
Relative humidity	from 10 to 95%	No condensation, corresponds to relative humidity (RH) Class 2 to IEC 61131, Part 2
Barometric pressure	1080 hPa to 795 hPa	Corresponds with an altitude of -1000 m to 2000 m
Concentration of pollutants	SO_2: < 0.5 ppm; RH < 60 %, no condensation $H2_S$: < 0.1 ppm; RH < 60 %, no condensation	Test: 10 ppm; 4 days Test: 1 ppm; 4 days
	ISA-S71.04 severity level G1; G2; G3	-

11.5 Specification of dielectric tests, protection class, degree of protection, and rated voltage of S7-300

Test voltage

Proof of dielectric strength must be provided in the type test at a test voltage to IEC 61131-2:

Circuits with rated voltage V_e to other circuits or ground.	Test voltage
< 50 V	500 VDC
< 150 V	2500 V DC
< 250 V	4000 V DC

Protection class

Protection class I to IEC 60536, i.e., a protective conductor must be connected to the mounting rail!

Protection against the ingress of foreign matter and water

- Degree of protection IP 20 to IEC 60529, i.e., protection against contact with standard probes.

No protection against the ingress of water.

11.6 Rated voltages of S7-300

Rated operating voltages

The S7-300 modules operate at different rated voltages. The table shows the rated voltages and corresponding tolerances.

Rated voltages	Tolerance
24 V DC	19.2 V DC to 28.8 V DC
120 VAC	93 VAC to 132 VAC
230 VAC	187 VAC to 264 VAC

Appendix A

A.1 General rules and regulations for S7-300 operation

Introduction

Seeing that an S7-300 can be used in many different ways, we can only describe the basic rules for the electrical installation in this document.

⚠ WARNING
Always observe these basic rules for electrical installation in order to achieve a fully functional S7-300 system.

EMERGENCY-OFF equipment

EMERGENCY-OFF equipment to IEC 204 (corresponds to VDE 113) must remain effective in all operating modes of the plant or system.

System startup after specific events

The table below shows what you have to observe when restarting a plant after specific events.

Table A- 1 System startup after specific events

If there is...	then ...
Restart following a voltage dip or power failure,	dangerous operating states must be excluded. If necessary, force EMERGENCY-OFF.
Startup after releasing the EMERGENCY OFF device,	uncontrolled or undefined startup operations must be excluded.

Mains voltage

The table below shows what you have to watch with respect to the mains voltage.

Table A- 2 Mains voltage

In the case of ...	the ...
Stationary systems or systems without all-pole mains disconnect switch	building installation must contain a mains disconnect switch or a fuse.
Load power supplies, power supply modules	set rated voltage range must correspond to local mains voltage.
All circuits of the S7-300	rated mains voltage fluctuation / deviation must lie within the permitted tolerance (refer to Technical Data of S7-300 modules).

24 VDC power supply

The table below shows what you must observe for the 24 VDC power supply.

Table A- 3 Protection against external electrical interference

In the case of ...	you need to observe ...	
Buildings	external lightning protection.	Install lightning protection (for example, lightning conductors)
24 VDC power supply cables, signal cables	internal lightning protection.	
24 VDC power supply	safe (electrical) extra-low voltage isolation	

Protection against external electrical interference

The table below shows how you must protect your system against electrical interference or faults.

Table A- 4 Protection against external electrical interference

In the case of ...	Make sure that ...
All plants or system in which the S7-300 is installed	the plant or system is connected to a protective conductor for the discharge of electromagnetic interference.
Supply / signal / bus cables	the cable routing and installation is correct.
Signal and bus cables	a cable/conductor break does not cause undefined plant or system states.

A.2 Protection against electromagnetic interference

A.2.1 Basic Points for EMC-compliant system installations

Definition: EMC

EMC (electromagnetic compatibility) describes the capability of electrical equipment to operate free of errors in a given electromagnetic environment, without being subject to external influence and without influencing external devices in any way.

Introduction

Although your S7-300 and its components are developed for an industrial environment and high electromagnetic compatibility, you should draw up an EMC installation plan before you install the controller taking into consideration all possible sources of interference.

Possible interferences

Electromagnetic interference can influence a PLC in various ways:

- Electromagnetic fields having a direct influence on the system
- Interference coupling caused by bus signals (PROFIBUS DP etc.)
- Interference coupling via the system wiring
- Interference influencing the system via the power supply and/or protective ground

The figure below shows the likely paths of electromagnetic interference.

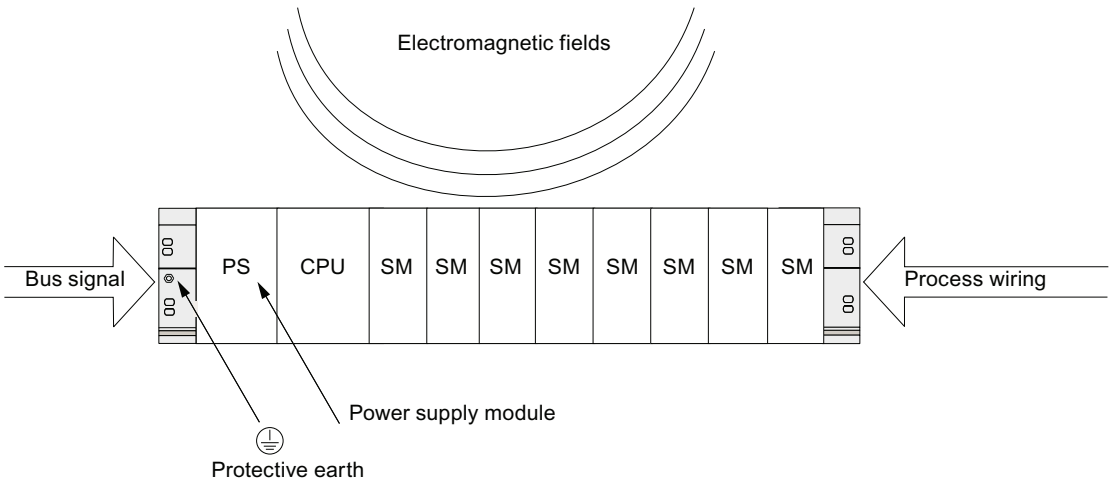

Coupling mechanisms

Depending on the emitting media (line or isolated) and the distance between the interference source and the device, four different coupling mechanisms can influence the PLC.

Table A- 5 Coupling mechanisms

Coupling mechanisms	Cause	Typical interference sources
Electrical coupling	Electrical or mechanical coupling always occurs when two circuits use one common cable.	• Clocked devices (influence on the network due to converters and third-party power supply modules) • Starting motors • Potential differences on component enclosures with common power supply • Static discharge
Capacitive coupling	Capacitive or electrical coupling occurs between conductors connected to different potentials. The coupling effect is proportional to voltage change over time.	• Interference coupling due to parallel routing of signal cables • Static discharge of the operator • Contactors
Inductive coupling	Inductive or magnetic coupling occurs between two current circuit loops. Current flow in magnetic fields induces interference voltages. The coupling effect is proportional to current change over time.	• Transformers, motors, arc welding devices • Power supply cables routed in parallelism • Switched cable current • High-frequency signal cable • Coils without suppression circuit
Radio frequency coupling	Radio frequency coupling occurs when an electromagnetic wave reaches a conductor system. This wave coupling induces currents and voltages.	• Neighboring transmitter (e.g. radio phones) • Sparking (spark plugs, collectors of electrical motors, welding devices)

A.2.2 Five basic rules for securing EMC

A.2.2.1 1. Basic rule for ensuring EMC

If you comply with theses five basic rules ...

you can ensure EMC in many cases!

Rule 1: Large area grounding contact

When you install the automation equipment, make sure that the surfaces of inactive metal parts are properly bonded to chassis ground.

- Bond all passive metal parts to chassis ground, ensuring large area and low-impedance contact.
- When using screw connections on varnished or anodized metal parts, support contact with special contact washers or remove the protective insulating finish on the points of contact.
- Wherever possible, avoid the use of aluminum parts for ground bonding. Aluminum oxidizes very easily and is therefore less suitable for ground bonding.
- Create a central connection between chassis ground and the equipotential grounded/protective conductor system.

A.2.2.2 2. Basic rule for ensuring EMC

Rule 2: Proper cable routing

Always ensure proper cable routing when wiring your system.

- Sort your wiring system into groups (high-voltage/power supply/signal/data cables).
- Always route high-voltage, signal or data cables through separated ducts or in separate bundles.
- Install the signal and data cables as close as possible to grounded surfaces (e.g. supporting beans, metal rails, steel cabinet walls).

See also

Cable routing inside buildings (Page 275)

Outdoor routing of cables (Page 277)

A.2.2.3 3. Basic rule for ensuring EMC

Rule 3: Fixing the cable shielding

Ensure proper fixation of the cable shielding.

- Always use shielded data cable. Always connect both ends of the shielding to ground on a large area.
- Analog cables must always be shielded. For the transmission of low-amplitude signals it might prove to be more efficient to have only one side of the shielding connected to ground.
- Directly behind the cable entry in the cabinet or enclosure, terminate the shielding on a large area of the shielding/protective ground bar and fasten it with the help of a cable clamp. Then, route the cable to the module; however, do not connect the shielding once again to ground in this place.
- Connections between the shielding/protective ground conductor bar and the cabinet/enclosure must be of a low impedance.
- Always install shielded data cables in metal/metallized connector housings.

See also

Cable shielding (Page 272)

A.2.2.4 4. Basic rule for ensuring EMC

Rule 4: Special EMC measures

Take special EMC measures for particular applications.

- Connect anti-surge elements to all inductive devices not controlled by S7-300 modules.
- For cabinet or cubicle lighting in the immediate range of your controller, use incandescent lamps or interference suppressed fluorescent lamps.

See also

How to protect digital output modules against overvoltages caused by inductance (Page 290)

A.2.2.5 5. Basic rule for ensuring EMC

Rule 5: Homogeneous reference potential

Create a homogeneous reference potential and ground electrical equipment whenever possible (refer to the section on Equipotential bonding).

- Route your equipotential conductors over a wide area if potential differences exist or are expected between your system components.
- Make sure you carefully direct your grounding measures. Grounding measures protect the controller and its functions.
- Form a star circuit to connect the equipment in your system and the cabinets containing central/expansion units to the grounding/protective conductor system. This prevents the formation of ground loops.

See also

Equipotential bonding (Page 273)

A.2.3 EMC-compliant installation of automation systems

Introduction

Quite often it is the case that interference suppression measures are not taken until corruption of user signals is detected after the controller is actually in operation.

Frequently, the causes of such interference are found in inadequate reference potentials as a result of faulty installation. This section shows you how to avoid such errors.

Inactive metal parts

Inactive parts are referred to as electrically conductive elements, separated from active elements by a basic insulating and only subject to electrical potential if an error occurs.

Installation and ground bonding of inactive metal parts

Bond all inactive metal parts to a large-surface ground when you install the S7-300. Proper ground bonding ensures a homogeneous reference potential for the controller and reduces the effect of interference coupling.

The ground connection establishes an electrically conductive interconnection of all inactive parts. The sum of all interconnected inactive parts is referred to as chassis ground.

This chassis ground must never develop a hazardous potential even if a fault occurs. Therefore, chassis ground must be connected to the protective conductor using cables with an adequate conductor cross-section. To avoid ground loops, physically separate chassis ground elements (cabinets, parts of the building construction or machine) must be bonded to the protective conductor system in a star circuit.

Observe the following for ground connection:

- In the same way as with active elements, exercise meticulous care to interconnect inactive metal elements.
- Always make sure that you have a low-impedance interconnection between metal elements (e.g. large and highly conductive contact surface).
- The protective insulating finish on varnished or anodized metal elements must be pierced or removed. Use special contact washers or completely remove the finish on the point of contact.
- Protect your connecting elements against corrosion (e.g. with a suitable grease).
- Interconnect moving chassis ground elements (e.g. cabinet doors) with flexible ground straps. Always use short ground straps with a large surface (the surface is decisive for the diversion of high-frequency currents).

A.2.4 Examples of an EMC-compliant installation: Cabinet configuration

Cabinet configuration

The figure below shows a cabinet installation with the measures described above (bonding of inactive metal parts to chassis ground and connecting the cable shielding to ground). This sample applies only to grounded operation. Note the points in the figure when you install your system.

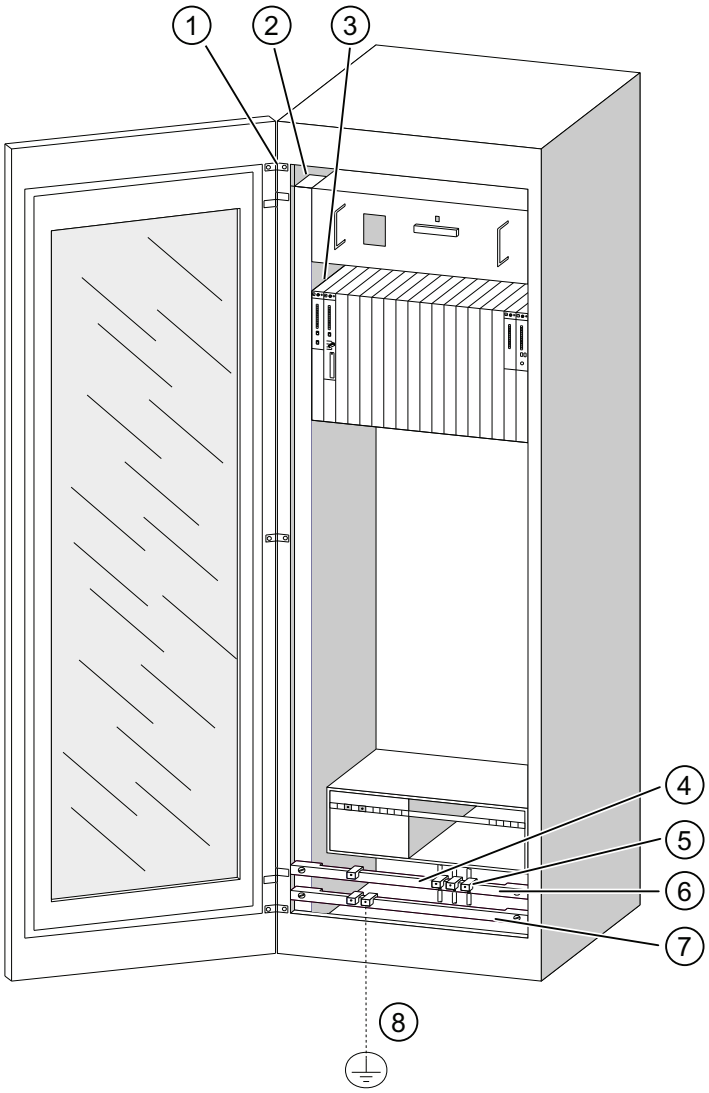

Figure A-1 Example of an EMC compatible cabinet installation

Key to installation

The numbers in the following list refer to the numbers in the figure above.

Number	Identifier	Explanation
①	Ground straps	If no large-surface metal-to-metal connections are available, you must either interconnect inactive metal parts (e.g. cabinet doors or mounting plates) or bond them to chassis ground using ground straps. Use short ground straps with a large surface.
②	Supporting bars	Interconnect the supporting bars on a large area to the cabinet walls (metal-to-metal connection).
③	Mounting the rail	The mounting bar and rack must be interconnected with large-area metal-to-metal connections.
④	Signal cables	Connect the shielding of signal cables on a large area of the protective conductor/additional shielding conductor bar and fasten them with cable clamps.
⑤	Cable clamp	The cable clamp must cover a large area of the shielding braid and ensure good contact.
⑥	Shielding conductor bar	Interconnect the shielding conductor bar on a large surface with the supporting bars (metal-to-metal connection). The cable shielding is terminated on the conductor bar.
⑦	Protective ground bar	Interconnect the protective conductor bar on a large surface with the supporting bars (metal-to-metal connection). Interconnect the grounding busbar with the protective ground system, using a separate cable (minimum cross-section 10 ^{2}).
⑧	Cable to the protective ground system (equipotential ground)	Interconnect the cable on a large area with the protective ground system (equipotential ground).

A.2.5 Examples of an EMC-compliant installation: Wall mounting

Wall mounting

When operating your S7 in a low-noise environment that conform with permitted ambient conditions (see Appendix Ambient conditions), you can also mount your S7 in frames or to the wall.

Interference coupling must be diverted to large metal surfaces. Therefore, always mount standard profile/shielding/protective conductor rails on metal parts of the construction. Steel sheet panels reference potential surfaces have been found especially suitable for wall-mounting.

Provide a shielding conductor bar for connecting your cable shielding. This shielding conductor bar can also be used as protective ground bar.

Reference for ambient conditions

For information on ambient conditions, refer to the *S7-300 Automation System, Module data* Reference Manual.

Please note

- When mounting on varnished or anodized metal parts, use special contact washers or remove the insulating layers.
- Provide a large-surface and low-impedance metal-to-metal connection for fastening the shielding/protective protective ground bar.
- Always touch-protect live mains conductors.

The figure below shows an example of EMC compatible wall-mounting of an S7.

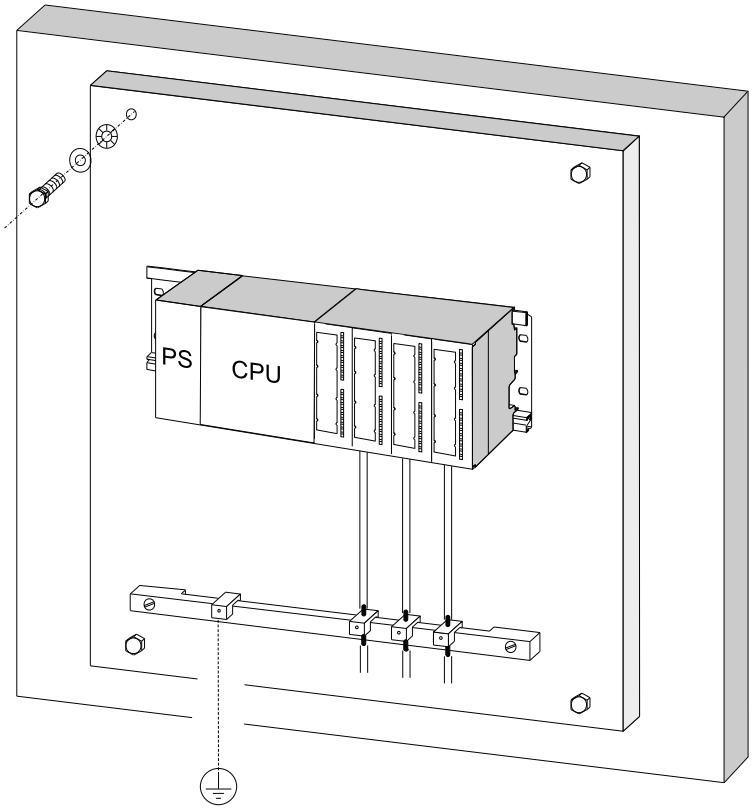

A.2.6 Cable shielding

Purpose of the shielding

A cable is shielded to attenuate the effects of magnetic, electrical and electromagnetic interference on the cable.

Operating principle

Interference currents on cable shielding is diverted to ground conductive interconnection between the shielding and the cabinet. To avoid interference as a result of these currents, it is imperative to provide a low-impedance connection to the protective conductor.

Suitable cables

Whenever possible, use cables equipped with a shielding braid. Shielding density should be at least 80 %. Avoid cables with film shielding, because the film can be easily damaged by tensile or pressure stress, thus reducing its shielding effect.

Handling of the shielding

Note the following points on handling the shielding:

- Always use metal clamps to mount shielding braid. The clamps must contact a large area of the shielding and provide appropriate contact force.
- Directly behind the cabinet's cable entry, terminate the shielding on a shielding bus. Then, route the cable to the module; however, do not connect the shielding once again to ground in this place.
- In installations outside of cabinets (e.g. for wall-mounting) you can also terminate the shielding on a cable duct.

The figure below shows some options for mounting shielded cables, using cable clamps.

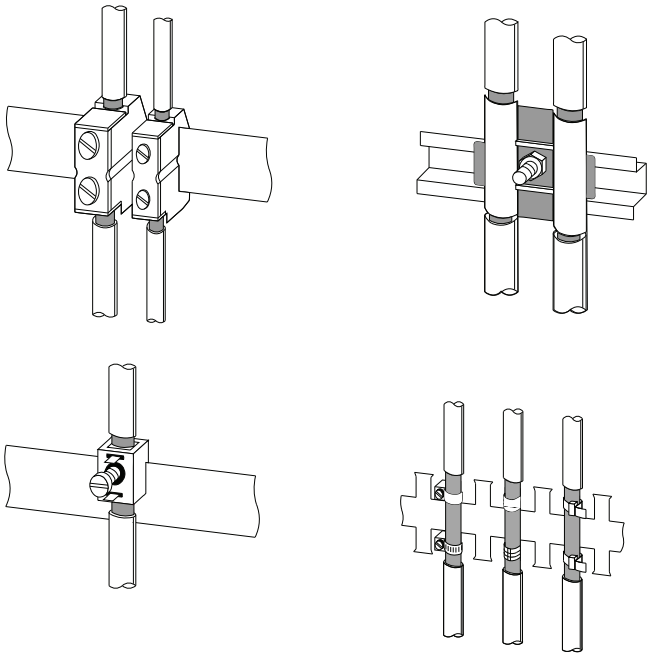

See also

Terminating shielded cables on the shield connection element (Page 121)

A.2.7 Equipotential bonding

Potential differences

Potential differences can occur between separate system elements. This can result in high equipotential currents, e.g. if the cable shielding is terminated at both ends and grounded to different system components.

The cause of potential difference can be differences in the power supplies.

WARNING

Cable shielding is not suitable for equipotential bonding. Always use the prescribed cables (for example, with a cross-section of 16 mm^2). When installing MPI/DP networks, make sure that you provide a sufficient conductor cross-section. Otherwise, interface hardware might be damaged or even destroyed.

Equipotential bonding conductor

To reduce potential differences and ensure proper functioning of your electronic equipment, you must install equipotential bonding conductors.

Note the following points on the use of equipotential bonding conductors:

- The lower the impedance of an equipotential bonding conductor, the more effective is equipotential bonding.
- When shielded signal cables interconnect two system components and the shielding is connected on both ends to ground/protective conductors, the impedance of the additional equipotential bonding conductor must not exceed 10 % of the shielding impedance.
- Determine the cross-section of your equipotential bonding conductor on the basis of the maximum equalizing current that will flow through it. The equipotential bonding conductor cross-section that has proven best in practice is 16 mm^2.
- Always use equipotential bonding conductors made of copper or galvanized steel. Always connect the cables on a large surface to the equipotential conductor bar/protective conductor and protect it against corrosion.
- Route your equipotential bonding conductor to minimize the area between the equipotential bonding conductor and signal lines as far as possible (see the figure below).

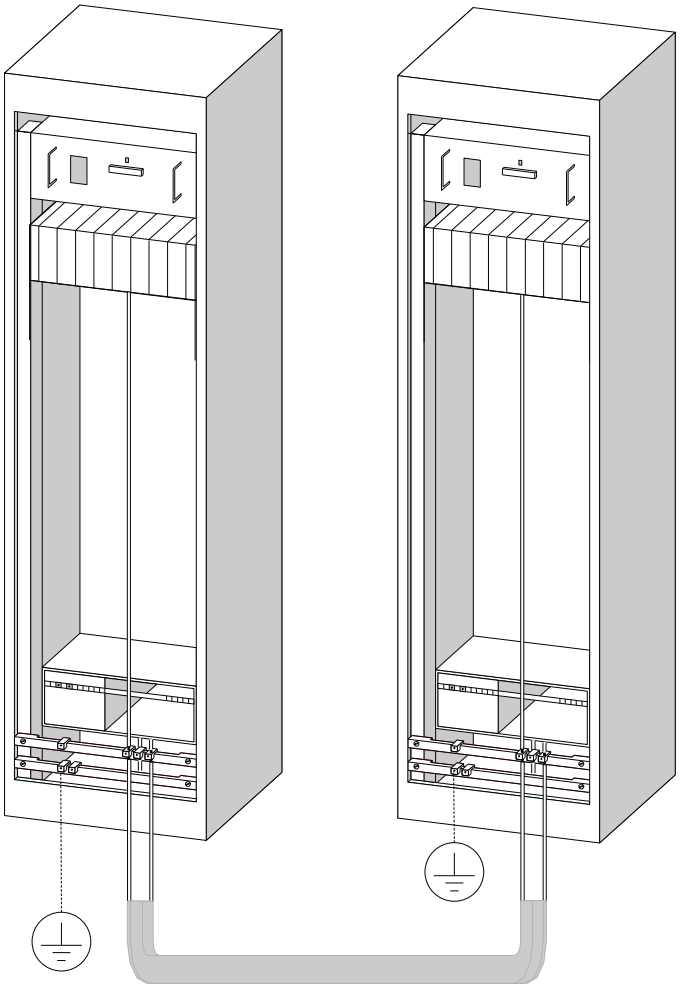

A.2.8 Cable routing inside buildings

Introduction

Inside buildings (inside and outside cabinets), clearances must be maintained between groups of different cables to achieve the necessary electromagnetic compatibility (EMC). The following table contains information on the general rules governing clearances to enable you to choose the correct cables.

How to read the table

To find out how to run two cables of different types, proceed as follows:

1. Look up the type of the first cable in column 1 (Cables for ...).
2. Look up the type of the second cable in the corresponding section in column 2 (and cables for ...).
3. Note the applicable directives in column 3 (Run ...).

Table A- 6 Cable routing inside buildings

Cables for ...	and cables for ...	Run ...
• Bus signals, shielded (for example, PROFIBUS, PROFINET) • Data signals, shielded (programming devices, operator panels, printers, counter inputs, etc.) • Analog signals, shielded • DC voltage (≤ 60 V), unshielded • Process signals (≤ 25 V), shielded • AC voltage (≤ 5 V), unshielded • Monitors (coaxial cable)	• Bus signals, shielded (for example, PROFIBUS, PROFINET) • Data signals, shielded (programming devices, operator panels, printers, counter inputs, etc.) • Analog signals, shielded • DC voltage (≤ 60 V), unshielded • Process signals (≤ 25 V), shielded • AC voltage (≤ 25 V), unshielded • Monitors (coaxial cable)	In common bundles or cable ducts
	• DC voltage (> 60 V and ≤ 400 V), unshielded • AC voltage (> 25 V and ≤ 400 V), unshielded	In separate bundles or cable ducts (no minimum clearance necessary)
	• DC and AC voltage (> 400 V), unshielded	**Inside cabinets:** In separate bundles or cable ducts (no minimum clearance necessary) **Outside cabinets:** On separate cable racks with a clearance of at least 10 cm

Cables for ...	and cables for ...	Run ...
• DC voltage (> 60 V and ≤ 400 V), unshielded • AC voltage (> 25 V and ≤ 400 V), unshielded	• Bus signals, shielded (for example, PROFIBUS, PROFINET) • Data signals, shielded (programming devices, operator panels, printers, counter inputs, etc.) • Analog signals, shielded • DC voltage (≤ 60 V), unshielded • Process signals (≤ 25 V), shielded • AC voltage (≤ 25 V), unshielded • Monitors (coaxial cable)	In separate bundles or cable ducts (no minimum clearance necessary)
	• DC voltage (> 60 V and ≤ 400 V), unshielded • AC voltage (> 25 V and ≤ 400 V), unshielded	In common bundles or cable ducts
	• DC and AC voltage (> 400 V), unshielded	Inside cabinets: In separate bundles or cable ducts (no minimum clearance necessary) Outside cabinets: On separate cable racks with a clearance of at least 10 cm
DC and AC voltage (> 400 V), unshielded	• Bus signals, shielded (e.g. PROFIBUS, PROFINET) • Data signals, shielded (programming devices, operator panels, printers, counter inputs, etc.) • Analog signals, shielded • DC voltage (≤ 60 V), unshielded • Process signals (≤ 25 V), shielded • AC voltage (≤ 25 V), unshielded • Monitors (coaxial cable)	Inside cabinets: In separate bundles or cable ducts (no minimum clearance necessary) Outside cabinets: On separate cable racks with a clearance of at least 10 cm
	• DC and AC voltage (> 400 V), unshielded	In common bundles or cable ducts

A.2.9 Outdoor routing of cables

Rules for EMC-compliant cable routing

The same EMC-compliant rules apply both to indoor and outdoor routing of cables. The following also applies:

- Running cables on metal cable trays.
- Electrical connection of the joints of cable trays/ducts.
- Ground the cable carriers.
- If necessary, provide adequate equipotential bonding between connected devices.
- Take the necessary (internal and external) lightning protection and grounding measures in as far as they are applicable to your particular application.

Rules for lightning protection outside buildings

Run your cables either:

- in metal conduits grounded at both ends, or
- in concrete cable ducts with continuous end-to-end armoring.

Overvoltage protection equipment

An individual appraisal of the entire plant is necessary before any lightning protection measures are taken.

A.3 Lightning and surge voltage protection

A.3.1 Overview

Introduction

One of the most common causes of failure is overvoltage caused by:

- Atmospheric discharges
- Electrostatic discharges
- Switching overvoltages

The concepts or measures for protection from overvoltages is based on the lightning protection zone concept.

The rules to be complied with for the transitions between the individual lightning protection zones are presented here.

Note

This section can only provide you with the general guide on protecting the S7-300 from overvoltage.

Complete protection from overvoltage is only guaranteed if the entire system design is based on the lightning protection zone concept. Comprehensive consideration must be given to this when planning construction of facilities.

We therefore recommend that you contact your Siemens representative or a company specialized in lightning and overvoltage protection if you require more detailed information about overvoltage.

From now on, we refer to the overvoltage protection device using the normative terminology, that is, according to the degree of hazard expected (pulse shape 8/20 µs or pulse shape 10/350 µs), divided into surge arresters for pulse shape 8/20 µs and lightning current arresters for pulse shape 10/350 µs.

Additional references

The following information is based on the lightning protection zone concept described in the IEC standard 62305-4 - "Protection against LEMP".

A.3.2 Lightning protection zone concept

Principle of the lightning protection zone concept according to IEC 62305-4, DIN EN 62305-4, VDE 0185-305-4

The principle behind the lightning protection zone concept is the division of the volume to be protected from overvoltages (e.g. a control room) into lightning protection zones based on EMC considerations (see figure A-2).

The various lightning protection zones (LPZ: Lightning Protection Zone) are delimited spatially as follows and not necessarily by physical boundaries, such as walls, floors, etc.

Lightning protection zones (LPZ: Lightning Protection Zone)	
Outside areas of a building with risk of a direct strike	Lightning protection zone LPZ 0_A
Outside areas of a building that are not at risk of a direct strike	Lightning protection zone LPZ 0_B
Inside areas of a building that follow lightning protection zone 0_B	Lightning protection zone LPZ 1
Inside areas of a building that normally represent separate EMC-reducing rooms and are in lightning protection zone 1	Lightning protection zone LPZ 2
Electrical equipment (with shielding properties) in lightning protection zone 2	Lightning protection zone LPZ 3

Effects of the Lightning Strike

Direct lightning strikes occur in lightning protection zone 0_A. Effects of the lightning strike are high-energy lightning currents and strong electromagnetic fields. Effects must be reduced from one lightning protection zone to the next through suitable lightning current or surge arresters/shielding measures.

Overvoltage

Electromagnetic fields of the lightning channel can be reduced with appropriate shielding measures. Overvoltages due to inductions can be reduced to an non-dangerous level starting in lightning protection zone 0_B using surge arresters.

Diagram of the lightning protection zones

The following schematic diagram shows the implementation of the lightning protection zone concept for a building with outside lightning protection.

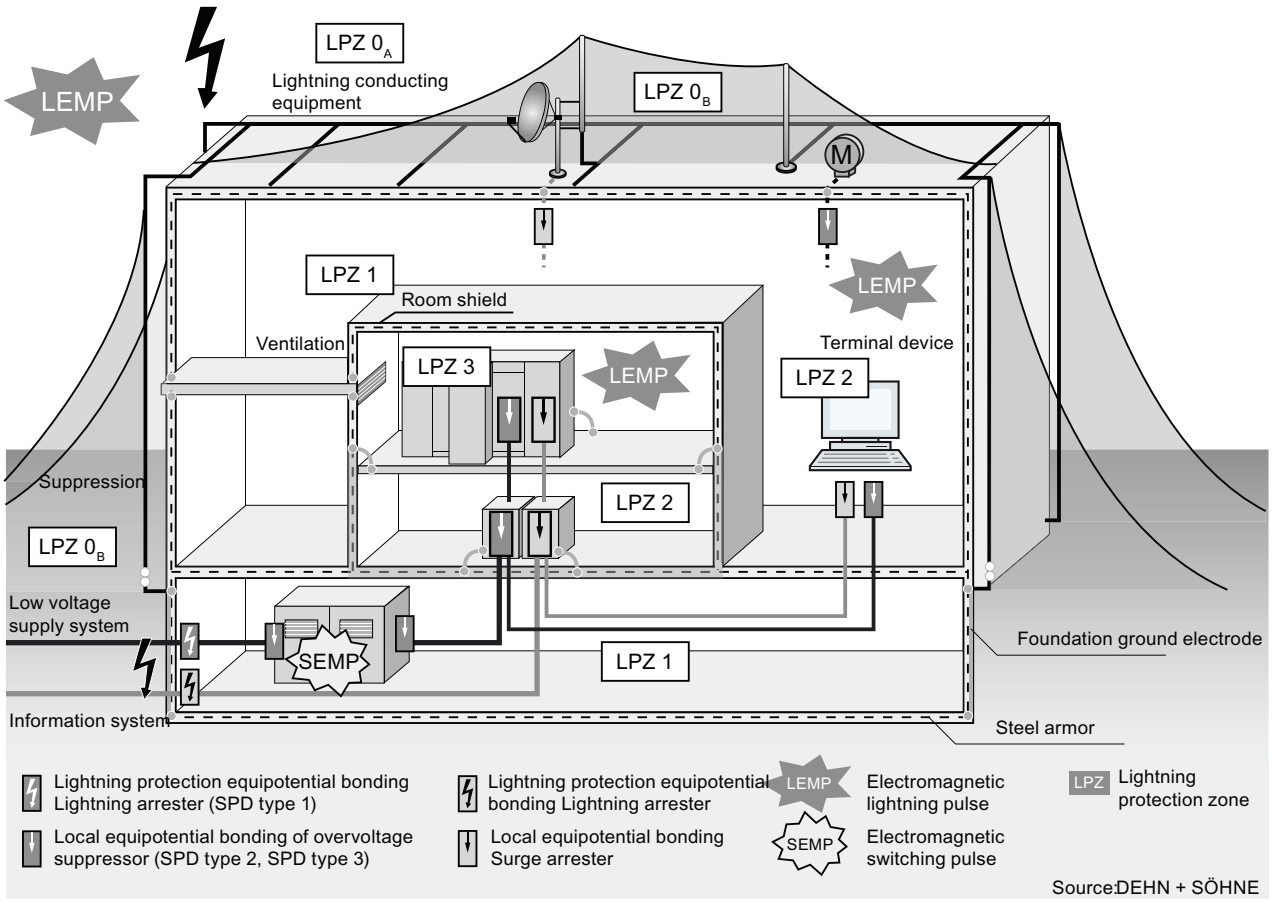

Figure A-2 Lightning protection zones of a building with outside lightning protection

Principle of interfaces between the lighting protection zones

Measures must be taken to reduce the peak current load and the magnetic fields at the interfaces between the lightning protection zones.

Each zone-penetrating metallic/electrical system must be incorporated into the equipotential bonding at the zone transition.

Note

Metal systems include ducts, structural parts, pipes (water, gas and heat), etc.

Electrical systems include power and IT cables and wires (e.g. line voltage, bus cable, ...).

A.3.3 Rules for the interface between the lightning protection zones 0 and 1

Rules for the interface 0_A to 1 (lightning protection equipotential bonding)

For lightning protection equipotential bonding at the interface of lightning protection zone 0_A to 1, the following applies:

- Use of lightning current suppresors prevents introduction of lightning partial currents into buildings.
- Creation of a local equipotential bonding at the transition of lightning protection zones, with incorporation of metal supply systems (pipes, air ducts, cable ducts, cable channels etc.).

Components for the lightning protection equipotential bonding

Table A- 7 Components for the lightning protection equipotential bonding

Seq. No.	Cables for ...	Connection at the interface 0_A to 1 with:	Item number
1	3-phase TN-C system	DEHNventil® DV M TNC 255 DEHNventil® DV M TNC 255 FM *	951 300 951 305 *
2	3-phase TN-S system	DEHNventil® DV M TNS 255 DEHNventil® DV M TNS 255 FM *	951 400 951 405 *
3	3-phase TT system	DEHNventil® DV M TT 255 DEHNventil® DV M TT 255 FM *	951 310 951 315 *
4	AC TN-S system	DEHNventil® DV M TN 255 DEHNventil® DV M TN 255 FM *	951 200 951 205 *
5	AC TT system	DEHNventil® DV M TT 2P 255 DEHNventil® DV M TT 2P 255 FM *	951 110 951 115 *
6	Supply U_N = 24 VDC	BLITZDUCTOR® XT, basic unit BXT BAS BLITZDUCTOR® XT, module BXT ML2 B 180 (I_L = 1.2 A) (2-wire)	920 300 920 211
7	Supply U_N = 24 VDC	DEHNbloc® M, DB M 1 150 DEHNbloc® M, DB M 1 150 FM * (2 ea. required)	961 110 961 115 *
8	MPI bus cable, RS485, RS 232 (V.24)	BLITZDUCTOR® XT, basic unit BXT BAS BLITZDUCTOR® XT, Module BXT ML2 B 180 (2-wire)	920 300 920 211
9	Inputs/outputs of digital modules U_N = 24 VDC	BLITZDUCTOR® XT, basic unit BXT BAS BLITZDUCTOR® XT, Module BXT ML4 B 180 (I_L = 1.2 A) (4-wire)	920 300 920 310
10	Inputs/outputs of digital modules U_N = 230 VAC	DEHNbloc® M, DB M 1 255 DEHNbloc® M, DB M 1 255 * (2 ea. required)	961 120 961 125 *

Seq. No.	Cables for ...	Connection at the interface 0_A to 1 with:	Item number
11	Inputs/outputs of analog modules (for example, 4-20 mA, 1-10 V)	BLITZDUCTOR® XT, basic unit BXT BAS BLITZDUCTOR® XT, module BXT ML4 B 180 (I_L = 1.2 A) (4-wire)	920 300 920 310
* Version: With remote indication contact Components of the series BLITZDUCTOR® XT can be remotely monitored with the appropriate accessories. Additional information under (http://www.dehn.de) **Direct order of components via:** DEHN+SÖHNE GMBH+CO.KG. Hans-Dehn-Str. 1 D-92318 Neumarkt Tel. +49 (0)9181-906-730			

Rules for the interface 0_B to 1 (strong electromagnetic coupling)

For overvoltage protection at the interface of lightning protection zone 0_B to 1, the following applies:

- Use of power cables with peak current-capable cable shields (e.g., NYCWY) or twisted-pair IT cables (for example, A2Y(K)Y).
- Laying cables and lines
  - In continuous, peak current-capable metal pipes that are grounded at both ends
  - In reinforced concrete channels in which the reinforcement is grounded at both ends
  - On closed metal cable racks that are grounded at the beginning and end
- Use of fiber-optic cables without a metal shield if such a transmission is intended
- Creation of a local equipotential bonding at the transition of lightning protection zones, with incorporation of metal supply systems (pipes, air ducts, cable ducts, cable channels etc.).

Additional measures

If the actions listed above cannot be performed, protection by means of surge arresters must be provided. The following table contains overvoltage suppressors that may be used to protect facilities.

Overvoltage protection of 24 VDC power supply

Always use the BLITZDUCTOR VT, type AD 24 V for the 24 VDCpower supply of the S7-300. All other surge arrestors do not meet the tolerance range (19.2 - 28.8 V) of the S7-300.

General information on use of surge arresters

If, taking into account the tolerance range, the voltages that occur in the system exceed the specified maximum limits of the surge arresters used, surge arrestors of the next highest rated voltage series are to be used.

Components for the overvoltage protection

Table A- 8 Components for the overvoltage protection

Seq. No.	Cables for ...	Connection at the interface 0_B to 1 with:	Item number
1	3-phase TN-C system	DEHNguard® DG M TNC 275 DEHNguard® DG M TNC 275 FM *	952 300 952 305 *
2	3-phase TN-S system	DEHNguard® DG M TNS 275 DEHNguard® DG M TNS 275 FM *	952 400 952 405 *
3	3-phase TT system	DEHNguard® DG M TT 275 DEHNguard® DG M TT 275 FM *	952 310 952 315 *
4	AC TN-S system	DEHNguard® DG M TN 275 DEHNguard® DG M TN 275 FM *	952 200 952 205 *
5	AC TT system	DEHNguard® DG M TT 2P 275 DEHNguard® DG M TT 2P 275 FM *	952 110 952 115 *
6	Supply U_N = 24 VDC	BLITZDUCTOR® VT, BVT AD 24	918 402
7	MPI/DP RS 485 bus cable	BLITZDUCTOR® XT, basic unit BXT BAS BLITZDUCTOR® XT, Module BXT ML2 BD HFS 5	920 300 920 271
8	RS 232 (V.24) bus cable	BLITZDUCTOR® XT, basic unit BXT BAS BLITZDUCTOR® XT, Module BXT ML2 BE S 12	920 300 920 222
9	Industrial Ethernet	DEHNpatch DPA M CLE RJ45B 48	929 121
10	Inputs of digital modules U_N = 24 VDC	DEHNconnect RK, DCO RK ME 24 (I_L = 0.5 A)	919 921
11	Outputs of digital modules U_N = 24 VDC	DEHNconnect RK, DCO RK D 5 24 (I_L = 10.0 A)	919 986
12	Inputs/outputs of digital modules U_N = 230 VAC	DEHNguard® DG S 275 DEHNguard® DG S 275 FM * N-PE arrester in the TT system DEHNgap C S, DGP C S DEHNgap C S, DGP C S FM *	952 070 952 090 * 952 030 952 035 *
13	Inputs/outputs of analog modules (e.g. 4-20 mA, 1-10 V)	DEHNconnect RK, DCO RK ME 24 (I_L = 0.5 A)	919 921

* Version: With remote indication contact

Components of the series BLITZDUCTOR® XT can be remotely monitored with the appropriate accessories. Additional information under (http://www.dehn.de)

Direct order of components via:
DEHN+SÖHNE GMBH+CO.KG.
Hans-Dehn-Str. 1
D-92318 Neumarkt
Tel. +49 (0)9181-906-730

A.3.4 Rules for the interface between the lightning protection zones 1 and 2

Rules for the interface 1 to 2 (strong electromagnetic coupling)

For overvoltage protection at the interface 1 to 2, the following applies:

- Use of power cables with peak current-capable cable shields (e.g., NYCWY) or twisted-pair IT cables (for example, A2Y(K)Y).
- Laying cables and lines
  - In continuous, peak current-capable metal pipes that are grounded at both ends, or
  - In reinforced concrete channels in which the reinforcement is grounded at both ends, or
  - On closed metal cable racks that are grounded at the beginning and end
- Use of fiber-optic cables without a metal shield if such a transmission is intended
- Creation of a local equipotential bonding at the transition of lightning protection zones, with incorporation of metal supply systems (pipes, air ducts, cable ducts, cable channels etc.).

Additional measures

If the actions listed above cannot be performed, protection by means of surge arresters must be provided. The following table contains surge arresters that may be used to protect facilities.

Overvoltage protection of 24 VDC power supply

Always use the BLITZDUCTOR VT, type AD 24 V for the 24 VDC power supply of the S7-300. All other surge arrestors do not meet the tolerance range (19.2 - 28.8 V) of the S7-300.

General information on use of surge arresters

If, taking into account the tolerance range, the voltages that occur in the system exceed the specified maximum limits of the surge arresters used, surge arrestors of the next highest rated voltage series are to be used.

Components for the overvoltage protection

Table A- 9 Components for the overvoltage protection

Seq. no.	Cables for ...	Connection at the interface 1 to 2 with:	Item number
1	3-phase TN-C system	DEHNguard® DG M TNC 275 DEHNguard® DG M TNC 275 FM *	952 300 952 305 *
2	3-phase TN-S system	DEHNguard® DG M TNS 275 DEHNguard® DG M TNS 275 FM *	952 400 952 405 *
3	3-phase TT system	DEHNguard® DG M TT 275 DEHNguard® DG M TT 275 FM *	952 310 952 315 *
4	AC TN-S system	DEHNguard® DG M TN 275 DEHNguard® DG M TN 275 FM *	952 200 952 205 *
5	AC TT system	DEHNguard® DG M TT 2P 275 DEHNguard® DG M TT 2P 275 FM *	952 110 952 115 *
6	Supply U_N = 24 VDC	BLITZDUCTOR® VT, BVT AD 24	918 402
7	MPI/DP RS 485 bus cable	BLITZDUCTOR® XT, basic unit BXT BAS BLITZDUCTOR® XT, Module BXT ML2 BD HFS 5	920 300 920 271
8	RS 232 (V.24) bus cable	BLITZDUCTOR® XT, basic unit BXT BAS BLITZDUCTOR® XT, Module BXT ML2 BE S 12	920 300 920 222
9	Industrial Ethernet	DEHNpatch DPA M CLE RJ45B 48	929 121
10	Inputs of digital modules U_N = 24 VDC	DEHNconnect RK, DCO RK ME 24 (I_L = 0.5 A)	919 921
11	Outputs of digital modules U_N = 24 VDC	DEHNconnect RK, DCO RK D 5 24 (I_L = 10.0 A)	919 986
12	Inputs/outputs of digital modules U_N = 230 VAC	DEHNguard® DG S 275 DEHNguard® DG S 275 FM * N-PE arrester in the TT system DEHNgap DGP C S DEHNgap DGP C S FM *	952 070 952 090 * 952 030 952 035 *
13	Inputs/outputs of analog modules (e.g. 4-20 mA, 1-10 V)	DEHNconnect RK, DCO RK ME 24 (I_L = 0.5 A)	919 921

* Version: With remote indication contact

Components of the series BLITZDUCTOR® XT can be remotely monitored with the appropriate accessories. Additional information under (http://www.dehn.de)

Direct order of components via:
DEHN+SÖHNE GMBH+CO.KG.
Hans-Dehn-Str. 1
D-92318 Neumarkt
Tel. +49 (0)9181-906-730

A.3.5 Rules for the interface between the lightning protection zones 2 and 3

Rules for the interface 2 to 3 (electromagnetic coupling)

For overvoltage protection at the interface 2 to 3, the following applies:

- Use of power cables with peak current-capable cable shields (e.g., NYCWY) or twisted-pair IT cables (for example, A2Y(K)Y).
- Laying cables and lines
  - In continuous, peak current-capable metal pipes that are grounded at both ends, or
  - In reinforced concrete channels in which the reinforcement is grounded at both ends, or
  - On closed metal cable racks that are grounded at the beginning and end
- Use of fiber-optic cables without a metal shield if such a transmission is intended
- Creation of a local equipotential bonding at the transition of lightning protection zones, with incorporation of metal supply systems (pipes, air ducts, cable ducts, cable channels etc.).

Additional measures

If the actions listed above cannot be performed, protection by means of surge arresters must be provided. The following table contains surge arresters that may be used to protect facilities.

Overvoltage protection of 24 VDC power supply

Always use the BLITZDUCTOR VT, type AD 24 V for the 24 VDC power supply of the S7-300. All other surge arrestors do not meet the tolerance range (19.2 - 28.8 V) of the S7-300.

General information on the use of surge arresters

If, taking into account the tolerance range, the voltages that occur in the system exceed the specified maximum limits of the surge arresters used, surge arrestors of the next highest rated voltage series are to be used.

Components for the overvoltage protection

Table A- 10 Components for the overvoltage protection

Seq. no.	Cables for ...	Connection at the interface 2 to 3 with:	Item number
1	3-phase TN-S, TT system	DEHNrail® DR M 4P 255 DEHNrail® DR M 4P 255 FM * (I_L = 25.0 A)	953 400 953 405 *
2	AC TN-S, TT system	DEHNrail® DR M 2P 255 DEHNrail® DR M 2P 255 FM * (I_L = 25.0 A)	953 200 953 205 *
3	Supply U_N = 24 VDC	BLITZDUCTOR® VT, BVT AD 24	918 402
4	MPI/DP RS 485 bus cable	BLITZDUCTOR® XT, basic unit BXT BAS BLITZDUCTOR® XT, module BXT ML2 BD HFS 5	920 300 920 271
5	RS 232 (V.24) bus cable	BLITZDUCTOR® XT, basic unit BXT BAS BLITZDUCTOR® XT, module BXT ML2 BE S 12	920 300 920 222
6	Industrial Ethernet	DEHNpatch DPA M CLE RJ45B 48	929 121
7	Inputs of digital modules U_N = 24 VDC	DEHNconnect RK, DCO RK ME 24 (I_L = 0.5 A)	919 921
8	Outputs of digital modules U_N = 24 VDC	DEHNconnect RK, DCO RK D 5 24 (I_L = 10.0 A)	919 986
9	Inputs/outputs of digital modules U_N = 230 VAC	DEHNguard® DG S 275 DEHNguard® DG S 275 FM * N-PE arrester in the TT system DEHNgap C S, DGP C S DEHNgap C S, DGP C S FM *	952070 952 090 * 952 030 952 035 *
10	Inputs/outputs of analog modules (e.g. 4-20 mA, 1-10 V)	DEHNconnect RK, DCO RK ME 24 (I_L = 0.5 A)	919 921

* Version with remote indication contact

Components of the series BLITZDUCTOR® XT can be remotely monitored with the appropriate accessories. Additional information under (http://www.dehn.de)

Direct order of components via:
DEHN+SÖHNE GMBH+CO.KG.
Hans-Dehn-Str. 1
D-92318 Neumarkt
Tel. +49 (0)9181-906-730

A.3.6 Example: Surge protection circuit for networked S7-300 CPUs

The figure shows the required measures for the protection of two networked S7-300 against lightning strikes and overvoltage.

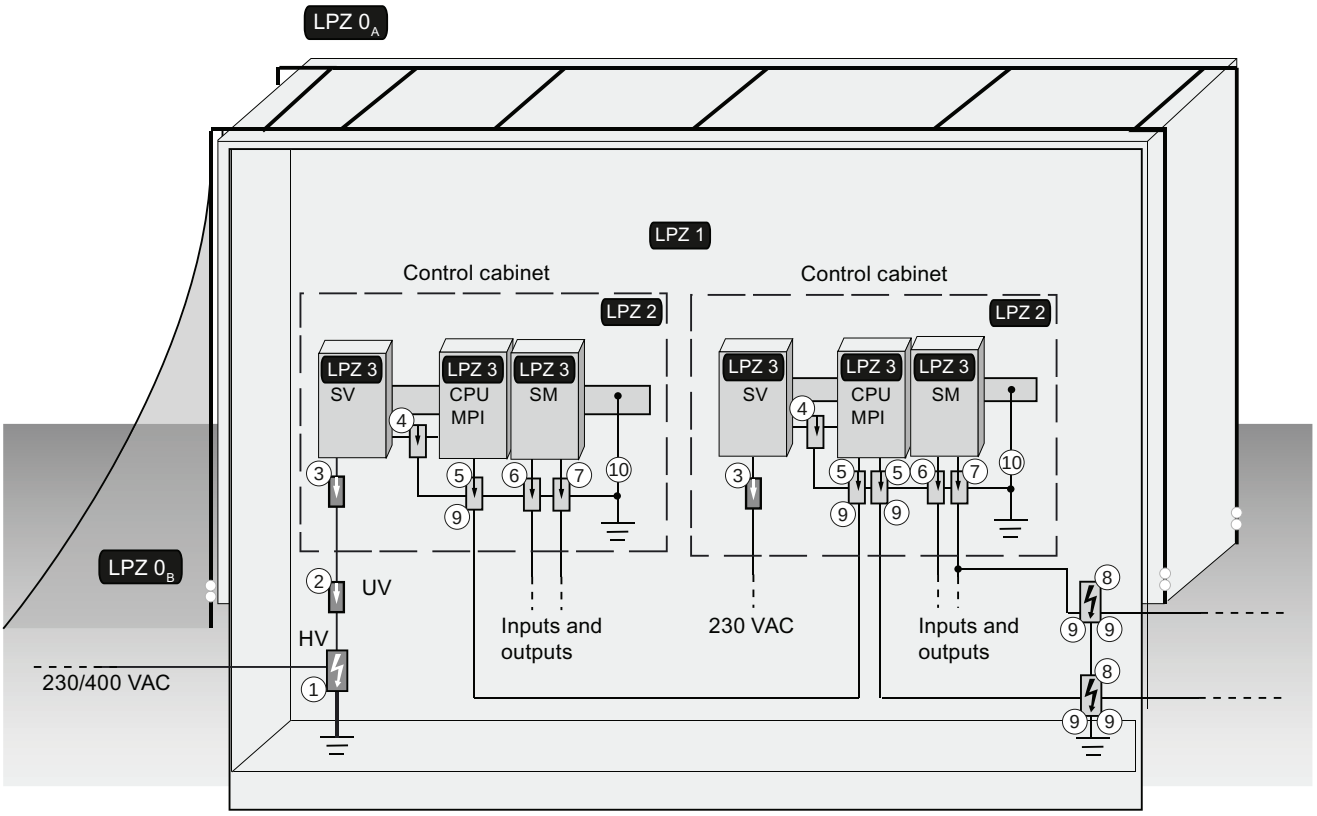

Figure A-3 Source: DEHN+Söhne

Components of the application example

The following table explains the components of the application example:

Seq. no.	Component	Meaning
①	Combination arrester 230/400 VAC supply, DEHNventil® DV M TNC 255 Item no. 951 300 DEHNventil® DV M TNC 255 FM * Part no. 951 305 * DEHNventil® DV M TNS 255 Part no. 951 400 DEHNventil® DV M TNS 255 FM * Part no. 951 405 *	Protection against indirect effects of lightning and overvoltages at zone transition $0_A \rightarrow 1$ and $0_A \rightarrow 2$
②	Surge arrester, 230/400 VAC supply, DEHNguard® DG M TNC 275 Item no. 952 300 DEHNguard® DG M TNC 275 FM * Part no. 952 305 * DEHNguard® DG M TNS 275 Part no. 952 400 DEHNguard® DG M TNS 275 FM * Part No. 952 405 *	Protection against indirect effects of lightning and overvoltages at zone transition 1 -> 2
③	Surge arrester, 230 VAC supply, DEHNrail DR M 2P 255 Item no. 953 200 DEHNrail DR M 2P 255 FM * Part no. 953 205 * (I_L = 25.0 A)	Protection against indirect effects of lightning and overvoltages at zone transition 2 → 3
④	Surge arrester, BLITZDUCTOR® VT, BVT AD 24, 24 VDC supply Item no. 918 402	Protection against indirect effects of lightning and overvoltages at zone transition 2 → 3
⑤	Surge arrester, RS 485 interface BLITZDUCTOR® XT Basic unit BXT BAS, Part no. 920 300 BLITZDUCTOR® XT Module BXT ML2 BD HFS 5, Part no. 920 271 (2-wire)	Protection against indirect effects of lightning and overvoltages at zone transition 2 → 3
⑥	Surge arrester, digital inputs of modules DEHNconnect RK, DCO RK ME 24 Part no. 919 921 (I_L = 0.5 A) (2-wire)	Protection against indirect effects of lightning and overvoltages at zone transition 2 → 3
⑦	Surge arrester, digital outputs of modules DEHNconnect RK, DCO RK D 5 24 Part no. 919 986 (I_L = 10.0 A) (2-wire)	Protection against indirect effects of lightning and overvoltages at zone transition 2 → 3

Seq. no.	Component	Meaning
⑧	Surge arrester, inputs/outputs of the modules BLITZDUCTOR® XT Basic unit BXT BAS, Part no. 920 300 BLITZDUCTOR® XT, Module BXT ML2 B 180, Part no. 920 211 (I_L = 1.2 A) (2-wire)	Protection against indirect effects of lightning and overvoltages at zone transition $0_A \rightarrow 1$
⑨	2 EMC spring terminals for the basic unit of the BLITZDUCTOR® XT Part no. 920 395	Direct or indirect shield grounding
⑩	Protective equipotential bonding line ≥ 6 mm^2 Cu	Protective equipotential bonding
* Version: With remote indication contact Components of the series BLITZDUCTOR® XT can be remotely monitored with the appropriate accessories. Additional information under (http://www.dehn.de) **Direct order of components via:** DEHN+SÖHNE GMBH+CO.KG. Hans-Dehn-Str. 1 D-92318 Neumarkt Tel. +49 (0)9181-906-730		

A.3.7 How to protect digital output modules against overvoltages caused by inductance

Inductive overvoltage

Overvoltage occurs, for example, when inductance is deactivated. Examples are relay coils and contactors.

Integrated surge arrester

S7-300 digital output modules are equipped with an integrated surge arrester.

Additional overvoltage protection

Inductive devices require additional surge arresters only in following cases:

- If these can be switched off by additional contacts (e.g. relay contacts).
- If the inductance cannot be controlled by SIMATIC modules, but the overvoltages that occur can nevertheless have a negative effect on SIMATIC.

Note: Request information on relevant surge protection rating from the supplier of inductive devices.

Example: EMERGENCY-OFF relay contact in the output circuit

The figures illustrates an output circuit requiring additional overvoltage protectors.

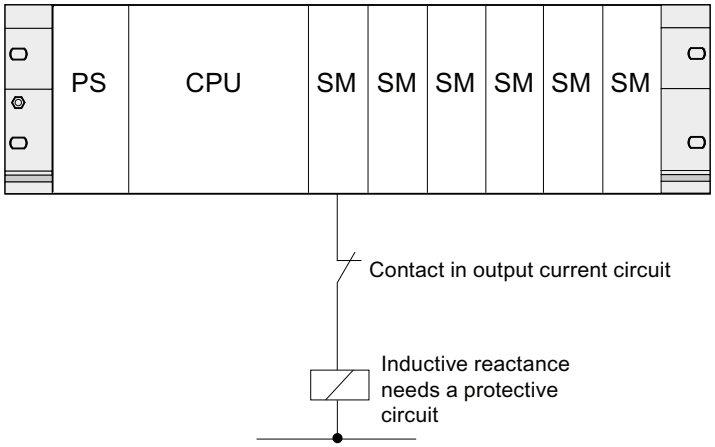

Refer also to the rest of the information in this section.

Circuit for coils operated with DC voltage

The figure below shows DC-operated coils equipped with diodes or Zener diode circuits.

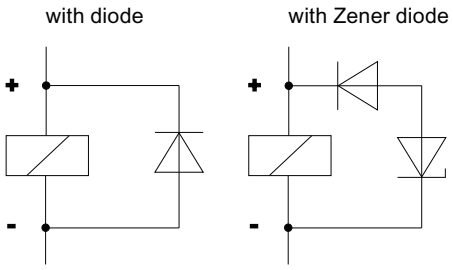

Diode/Zener diode circuits have the following characteristics:

- Switching overvoltages can be avoided.

  The Zener diode has a higher switch-off voltage capacity.
- High switch-off delay (6 to 9 times higher than without protective circuit).

  The Zener diode switches off faster than a diode circuit.

Circuit for coils operated with AC voltage

The figure shows coils operated with AC voltage and varistor or RC circuit.

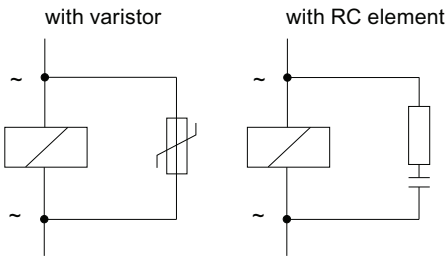

Properties of a protective circuit with **varistor**:

- The amplitude of the opening surge is limited rather than attenuated.
- The surge rise-ratio remains the same.
- Short off-delay.

Properties of a protective circuit with **RC elements**:

- Amplitude and steepness of the opening surge are reduced.
- Short off-delay.

A.4 Functional safety of electronic control equipment

Reliability through basic measures

SIMATIC devices and components are extremely reliable thanks to extensive measures in development and production.

The basic measures include:

- Selection of high-quality components and strategic cooperation with high-performance suppliers
- Measures to prevent static discharge when handling MOS circuits
- Checks and monitoring of the production processes using statistical methods and visual inspections at various production stages
- Heat endurance run at higher ambient temperature as monitoring run-in
- Thorough computer-controlled final inspection and testing of all modules
- Statistical evaluation of all returned systems and components and analysis of service requests to enable the immediate initiation of suitable corrective measures
- Comprehensive computer-aided acquisition of the quality data in the production in order to ensure all the adopted measures

Increased safety measures

In all cases where the occurrence of failures can result in material damage or injury to persons, special measures must be taken to enhance the safety of the entire installation. For these there exist special plant-specific regulations that also have to be taken into consideration by the owner-operator when structuring the control system.

For electronic control equipment with a safety function, the measures that have to be taken to prevent or rectify faults are based on the risks involved in the installation. As of a certain degree of hazard the basic measures mentioned above are no longer sufficient. The owner-operator has to ensure that additional measures are realized for the plant, for example by using SIMATIC S7-F fail-safe control systems.

Important note

The instructions in the operating manual must be followed exactly. Incorrect handling can render measures intended to prevent dangerous faults ineffective, or generate additional sources of danger.

Fail-safe systems in SIMATIC S7

Two fail-safe systems are available for the integration of the safety technology in the SIMATIC S7 automation systems:

- The fail-safe *S7 Distributed Safety* automation system
  - For the implementation of safety concepts in the field of machine and person protection, for example EMERGENCY-OFF facilities for the operation of machine tools/processing machines.
  - In the process industry, for example, for carrying out protection functions for instrumentation-and-control protective systems and burners.
- The fail-safe and optionally fault-tolerant *S7 F/FH systems* automation system for plants in process technology and the oil industry, for example.

Fail-safe and redundant system *S7 F/FH systems*

To increase the availability of the automation system and thereby avoid process interruption in the case of errors, it is possible to build in fail-safe systems as optionally redundant *S7 F/FH systems*. The increased availability is achieved through the redundancy of the following components: Power supply, CPU module, communications and IO devices.

Attainable safety requirements

S7 Distributed Safety F systems and S7 F/FH systems can meet the following safety requirements:

- Safety Integrity Level SIL1 to SIL3 to IEC 61508
- Categories 2 to 4 according to EN 954-1.

Reference

You can find additional information in the *Safety Engineering in SIMATIC S7* system description (A5E00109528-05).

Glossary

Accumulator

Accumulators represent CPU register and are used as buffer memory for download, transfer, comparison, calculation and conversion operations.

Address

An address is the identifier of a specific address or address area. Examples: Input I 12.1; Flag Word MW 25; Data Block DB 3.

Analog module

Analog modules convert process values (e.g. temperature) into digital values which can be processed in the CPU, or they convert digital values into analog manipulated variables.

Application

An application is a program that runs directly on the MS-DOS / Windows operating system. Applications on the programming device are for example STEP 7.

ASIC

ASIC is the acronym for Application Specific Integrated Circuits.

PROFINET ASICs are components with a wide range of functions for the development of your own devices. They implement the requirements of the PROFINET standard in a circuit and allow extremely high packing densities and performance.

Because PROFINET is an open standard, SIMATIC NET offers PROFINET ASICs for the development of your old devices under the name ERTEC .

Backplane bus

The backplane bus is a serial data bus. It supplies power to the modules and is also used by the modules to communicate with each other. Bus connectors interconnect the modules.

Backup memory

Backup memory ensures buffering of the memory areas of a CPU without backup battery. It backs up a configurable number of timers, counters, memory and data bytes,retentive timers, counters, memory bits and data bytes.

Bit memory

Bit memories are part of the CPU's system memory. They store intermediate results of calculations. They can be accessed in bit, word or dword operations.

See System memory

Bus

A bus is a communication medium connecting several nodes. Data can be transferred via serial or parallel circuits, that is, via electrical conductors or fiber optic.

Bus segment

A bus segment is a self-contained section of a serial bus system. Bus segments are interconnected by way of repeaters, for example, in PROFIBUS DP.

Central module

→ *CPU*

Changing IO devices during operation (changing partner ports)

Functionality of a PROFINET device.
A PROFINET device that supports this function can communicate during operation with changing communication partners at the same port.

Clock memory

flag bit which can be used to generate clock pulses in the user program (1 byte per flag bit).

Note

When operating with S7-300 CPUs, make sure that the byte of the clock memory bit is not overwritten in the user program!

Coaxial cable

A coaxial cable, also known as "coax", is a metal conductor system used in HF transmission circuits, for example, as radio and TV antenna cable, and in modern networks demanding high data transmission rates. The inner conductor of a coaxial cable is sheathed by a tube-like outer conductor. These conductors are separated by plastic insulation. In contrast to other cables, this type of cable provides a high degree of immunity to interference and EMC compatibility.

Code block

A SIMATIC S7 code block contains part of the **STEP 7** user program. (in contrast to a DB: this contains only data.)

Communication processor

Communication processors are modules used for point-to-point and bus topologies.

Component Based Automation

→ *PROFINET CBA*

Compress

The PG online function "Compress" is used to rearrange all valid blocks in CPU RAM in a contiguous area of load memory, starting at the lowest address. This eliminates fragmentation which occurs when blocks are deleted or edited.

Configuration

Assignment of modules to module racks/slots and (e.g. for signal modules) addresses.

Consistent data

Data which belongs together in terms of content and must not be separated is known as consistent data.

For example, the values of analog modules must always be handled as a whole, that is, the value of an analog module must not be corrupted as a result of read access at two different points of time.

Counters

Counters are part of CPU system memory. The content of "Counter cells" can be modified by **STEP 7** instructions (for example, up/down count.)

See also System memory

CP

→ *Communication processor*

CPU

Central processing unit = CPU of the S7 automation system with a control and arithmetic unit, memory, operating system, and interface for programming device.

Cycle control point

The cycle control point is the section of the CPU program processing in which the process image is updated.

Cycle time

The cycle time represents the time a CPU requires for one execution of the user program.

Cyclic interrupt

→ *Interrupt, cyclic interrupt*

Data block

Data blocks (DB) are data areas in the user program which contain user data. There are global data blocks which can be accessed by all code blocks, and instance data blocks which are assigned to a specific FB call.

Data exchange broadcast

→ *Direct data exchange*

Data exchange traffic

→ *Direct data exchange*

Data set routing

Functionality of a module with several network connections. Modules that support this function are able to pass on data of an engineering system (for example parameter data generated by SIMATIC PDM) from a subnetwork such as Ethernet to a field device at the PROFIBUS DP.

Data, static

Static data can only be used within a function block. These data are saved in an instance data block that belongs to a function block. Data stored in an instance data block are retained until the next function block call.

Data, temporary

Temporary data represent local data of a block. They are stored in the L-stack when the block is executed. After the block has been processed, these data are no longer available.

DB

→ *Data block*

DCP

DCP (**D**iscovery and Basic **C**onfiguration **P**rotocol). Enables the assignment of device parameters (e.g. the IP address) using manufacturer-specific configuration/programming tools.

Default Router

The default router is the router that is used when data must be forwarded to a partner located within the same subnet.

In STEP 7, the default router is named *Router*. STEP 7 assigns the local IP address to the default router.

Definition: Devices in the PROFINET environment

Within the context of PROFINET, "device" is the generic term for:

- Automation systems (e.g. PLC, PC)
- Field devices (for example, PLC, PC, hydraulic devices, pneumatic devices)
- Active network components (for example, switches, gateways, routers)
- PROFIBUS or other fieldbus systems

The main characteristic of a device is its integration into PROFINET communication by means of Ethernet or PROFIBUS.

The following device types are distinguished based on their attachment to the bus:

- PROFINET devices
- PROFIBUS devices

Detecting the network topology

LLDP (Link Layer Discovery Protocol) is a protocol that is used to detect the closest neighbors. It enables a device to send information about itself and to save information received from neighboring devices in the LLDP MIB. This information can be looked up via the SNMP. This information allows a network management system to determine the network topology.

Determinism

→ *Real Time*

Device

Within the PROFINET context, "device" is the generic term for:

- Automation systems,
- Field devices (for example, PLC, PC)
- Active network components (for example, distributed I/O, valve terminals, drives),
- hydraulic devices and
- pneumatic devices.

The main characteristic of a device is its integration in PROFINET communication over Ethernet or PROFIBUS.

The following device types are distinguished based on their bus connections:

- PROFINET devices
- PROFIBUS devices

Device Name

Before an IO device can be addressed by an IO controller, it must have a device name. In PROFINET, this method was selected because it is simpler to work with names than with complex IP addresses.

The assignment of a device name for a concrete IO device can be compared with setting the PROFIBUS address of a DP slave.

When it ships, an IO device does not have a device name. An IO device can only be addressed by an IO controller, for example for the transfer of project engineering data (including the IP address) during startup or for user data exchange in cyclic operation, after it has been assigned a device name with the PG/PC.

Device replacement without removable medium/programming device

It is easy to replace IO devices that support this function:

- A removable medium (such as a SIMATIC Micro Memory Card) with stored device name is not required.
- The device name does not have to be assigned with the programming device.
- A replaced IO device that has already been put into operation must be reset to factory settings using the "Reset to factory settings" function.

The replaced IO device is assigned the device name by the IO controller and no longer from a removable media or programming device. The IO controller uses the configured topology and the neighboring relationships determined by the IO devices to this purpose. The configured target topology must coincide accordingly with the actual topology.

Diagnostic buffer

The diagnostics buffer represents a buffered memory area in the CPU. It stores diagnostic events in the order of their occurrence.

Diagnostic interrupt

Modules capable of diagnostics operations report detected system errors to the CPU by means of diagnostic interrupts.

Diagnostics

→ *System diagnostics*

Direct data exchange

Direct data exchange is a special communication relationship between PROFIBUS DP nodes. Direct data exchange is characterized by PROFIBUS DP nodes that "listen" on the bus and know which data a DP slave returns to its DP master.

DP master

A master which behaves in accordance with EN 50170, Part 3 is known as a DP master.

DP slave

A slave operated on PROFIBUS with PROFIBUS DP protocol and in accordance with EN 50170, Part 3 is referred to as DP slave.

DPV1

The designation DPV1 means extension of the functionality of the acyclical services (to include new interrupts, for example) provided by the DP protocol. The DPV1 functionality has been incorporated into IEC 61158/EN 50170, volume 2, PROFIBUS.

Electrically isolated

The reference potentials of the control and load circuit of isolated I/O modules are electrically isolated, for example, by means of optocouplers, relays or transformers. Input/output circuits may be grouped.

Equipotential bonding

Electrical connection (equipotential bonding conductor) which eliminates potential difference between electrical equipment and external conductive bodies by drawing potential to the same or near the same level, in order to prevent disturbing or dangerous voltages between these bodies.

Error display

One of the possible reactions of the operating system to a runtime error is to output an error message. Additional reactions: Error reaction in the user program, CPU in STOP.

Error handling via OB

After the operating system has detected a specific error (e.g. access error with STEP 7), it calls a dedicated block (Error OB) that determines additional CPU actions.

Error response

Reaction to a runtime error. Reactions of the operating system: It sets the automation system to STOP, indicates the error, or calls an OB in which the user can program a reaction.

ERTEC

→ *ASIC*

Fast Ethernet

Fast Ethernet describes the standard with which data is transmitted at 100 Mbit/s. Fast Ethernet uses the 100 Base-T standard.

FB

→ *Function block*

FC

→ *Function*

FEPROM

→ *Memory Card (MC)*

Flash EPROM

FEPROMs can retain data in the event of power loss, same as electrically erasable EEPROMs. However, they can be erased within a considerably shorter time (FEPROM = Flash Erasable Programmable Read Only Memory). They are used on Memory Cards.

Force

The Force function can be used to assign the variables of a user program or CPU (also: inputs and outputs) constant values.

In this context, please note the limitations listed in the *Overview of the test functions section in the chapter entitled Test functions, Diagnostics and Troubleshooting in the S7-300 Installation manual*.

Function

According to IEC 1131-3, a function (FC) is a code block without static data. A function allows parameters to be passed in the user program. Functions are therefore suitable for programming frequently occurring complex functions, e.g. calculations.

Function block

According to IEC 1131-3, a function block (FB) is a code block with static data. A function block allows parameters to be transferred to the user program. Function blocks are therefore suitable for programming frequently recurring, complex functions, e.g., rules, mode selection.

Functional ground

Grounding which has the sole purpose of safeguarding the intended function of electrical equipment. With functional grounding you short-circuit interference voltage which would otherwise have an unacceptable impact on equipment.

GD circuit

A GD circuit comprises a number of CPUs sharing data by means of global data communication, and is used as follows:

- A CPU broadcasts a GD packet to the other CPUs.
- A CPU sends and receives a GD packet from another CPU.

A GD circuit is identified by a GD circuit number.

GD element

A GD element is generated by assigning shared global data. It is identified by a unique global data ID in the global data table.

GD packet

A GD packet can consist of one or several GD elements transmitted in a single message frame.

Global data

Global data can be addressed from any code block (FC, FB, OB). In particular, this refers to bit memories M, inputs I, outputs Q, timers, counters and data blocks DB. Global data can be accessed via absolute or symbolic addressing.

Global data communication

Global data communication is a procedure that is used to transfer global data between CPUs (without SFCs/SFBs).

Ground

The conductive earth whose electrical potential can be set equal to zero at any point.

Ground potential can be different from zero in the area of grounding electrodes. The term reference ground is frequently used to describe this situation.

Grounding means, to connect an electrically conductive component via an equipotential grounding system to a grounding electrode (one or more conductive components with highly conductive contact to earth).

Chassis ground is the totality of all the interconnected passive parts of a piece of equipment on which dangerous fault-voltage cannot occur.

Ground

The conductive earth whose electrical potential can be set equal to zero at any point.

Ground potential can be different from zero in the area of grounding electrodes. The term reference ground is frequently used to describe this situation.

Grounding means, to connect an electrically conductive component via an equipotential grounding system to a grounding electrode (one or more conductive components with highly conductive contact to earth).

Chassis ground is the totality of all the interconnected passive parts of a piece of equipment on which dangerous fault-voltage cannot occur.

Ground

The conductive earth whose electrical potential can be set equal to zero at any point.

Ground potential can be different from zero in the area of grounding electrodes. The term reference ground is frequently used to describe this situation.

Grounding means, to connect an electrically conductive component via an equipotential grounding system to a grounding electrode (one or more conductive components with highly conductive contact to earth).

Chassis ground is the totality of all the interconnected passive parts of a piece of equipment on which dangerous fault-voltage cannot occur.

GSD file

The properties of a PROFINET device are described in a GSD file (General Station Description) that contains all the information required for configuration.

As with PROFIBUS, you can link a PROFINET device in STEP 7 by means of a GSD file.

In PROFINET IO, the GSD file is in XML format. The structure of the GSD file conforms to ISO 15734, which is the world-wide standard for device descriptions.

In PROFIBUS, the GSD file is in ASCII format.

Hardware interrupt

A hardware interrupt is triggered by interrupt-triggering modules as a result of a specific event in the process. The hardware interrupt is reported to the CPU. The assigned organization block will be processed according to interrupt priority.

HART

English: **H**ighway **A**ddressable **R**emote **T**ransducer

Hub

→ *Switch*

I-Device

The "I-Device" (intelligent IO device) functionality of a CPU facilitates data exchange with an IO controller and operation of the CPU, for example, as intelligent preprocessing unit of sub processes. Accordingly, the intelligent device is integrated into a "higher-level" IO controller, acting as IO device.

The functionality of the intelligent device ensures that the data is pre-processed in the user program on the CPU. The process values acquired from central or distributed locations (PROFINET IO or PROFIBUS DP) are pre-processed in the user program and provided to a higher-level station via PROFINET IO device interface of the CPU.

Industrial Ethernet

Industrial Ethernet (formerly SINEC H1) is a technology that allows data to be transmitted free of interference in an industrial environment.

Due to the openness of PROFINET, you can use standard Ethernet components. We recommend, however, that you install PROFINET as Industrial Ethernet.

Instance data block

The **STEP 7** user program assigns an automatically generated DB to every call of a function block. The instance data block stores the values of input, output and in/out parameters, as well as local block data.

Interface, MPI-compatible

→ *MPI*

Interrupt

The CPU's operating system distinguishes between different priority classes for user program execution. These priority classes include interrupts, e.g. process interrupts. When an interrupt is triggered, the operating system automatically calls an assigned OB. In this OB the user can program the desired response (e.g. in an FB).

Interrupt, cyclic interrupt

A cyclic interrupt is generated periodically by the CPU in a configurable time pattern. A corresponding OB will be processed.

Interrupt, diagnostic

→ *Diagnostic interrupt*

Interrupt, hardware

→ *Hardware interrupt*

Interrupt, status

A status interrupt can be generated by a DPV1 slave or a PNIO device respectively. At the DPV1 master or the PNIO controller respectively the receipt of the interrupt causes the OB 55 to be called up.

For detailed information on OB 56, refer to the *Reference Manual System Software for S7-300/400: System and Standard Functions*.

Interrupt, time-delay

The delay interrupt belongs to one of the priority classes in SIMATIC S7 program processing. It is generated on expiration of a time started in the user program. A corresponding OB will be processed.

Interrupt, time-delay

→ *Interrupt, time-delay*

Interrupt, time-of-day

The time-of-day interrupt belongs to one of the priority classes in SIMATIC S7 program processing. It is generated at a specific date (or daily) and time-of-day (e.g. 9:50 or hourly, or every minute). A corresponding OB will be processed.

Interrupt, update

An update interrupt can be generated by a DPV1 slave or a PNIO device respectively. At the DPV1 master or the PNIO controller respectively the receipt of the interrupt causes the OB 56 to be called up.

For detailed information on OB 56, refer to the *Reference Manual System Software for S7-300/400: System and Standard Functions*.

Interrupt, vendor-specific

A vendor-specific interrupt can be generated by a DPV1 slave or a PNIO device respectively. At the DPV1 master or the PNIO controller respectively, receipt of the interrupt causes the OB 57 to be called.

For detailed information on OB 57, refer to the *Reference Manual System Software for S7-300/400: System and Standard Functions*.

IP address

To allow a PROFINET device to be addressed as a node on Industrial Ethernet, this device also requires an IP address that is unique within the network. The IP address is made up of 4 decimal numbers with a range of values from 0 through 255. The decimal numbers are separated by a period.

The IP address is made up of

- The address of the (subnet) network and
- The address of the node (generally called the host or network node).

IRT

→ *Isochronous Real Time communications*

Isochronous mode

In order to maximize deterministic performance, the process data, the transmission cycle via PROFIBUS DP or PROFINET IO, as well as the user program are synchronized. The input and output data of the distributed IO devices in the system is acquired and output simultaneously. The isochronous PROFIBUS DP cycle/PROFINET IO cycle acts as the corresponding clock generator.

Isochronous Real Time communications

Synchronized transmission procedure for the cyclic exchange of IO data between PROFINET devices.
A reserved bandwidth within the send clock is available for the IRT / IO data. The reserved bandwidth guarantees that the IRT data can also be transferred even during another high network load (for example TCP/IP communication or additional real time communication) at reserved, synchronized intervals.

LAN

Local Area Network; interconnects multiple computers within a company. The geographical topology of a LAN is limited to the local premises and is only available to the operating company or institution.

LLDP

LLDP (Link Layer Discovery Protocol) is a protocol that is used to detect the closest neighbors. It enables a device to send information about itself and to save information received from neighboring devices in the LLDP MIB. This information can be looked up via the SNMP. This information allows a network management system to determine the network topology.

Load memory

This memory contains objects generated by the programming device. Load memory is implemented by means of a plug-in Micro Memory Card of different memory capacities. The SIMATIC Micro Memory Card must be inserted to allow CPU operation.

Load power supply

Power supply to the signal / function modules and the process I/O connected to them.

Local data

→ *Data, temporary*

MAC address

Each PROFINET device is assigned a worldwide unique device identifier in the factory. This 6-byte long device identifier is the MAC address.

The MAC address is divided up as follows:

- 3 bytes vendor identifier and
- 3 bytes device identifier (consecutive number).

The MAC address is normally printed on the front of the device.
Example: 08-00-06-6B-80-C0

Main memory

The main memory is integrated in the CPU and cannot be extended. It is used to run the code and process user program data. Programs only run in the main memory and system memory.

Master

When a master has the token, it can send data to other nodes and request data from other nodes (= active node).

Media redundancy

Function that ensures network and system availability. Redundant transmission links (ring topology) ensure that an alternative communication path is made available if a transmission link fails.

Memory Card (MC)

Memory Cards are memory media for CPUs and CPs. They are implemented in the form of RAM or FEPROM. An MC differs from a Micro Memory Card only in its dimensions (MC is approximately the size of a credit card).

MIB

An MIB (Management Information Base) is a data base of a device. SNMP clients access this data base in the device. The S7 device family supports, among others, the following standard MIBs:

- MIB II, standardized in the RFC 1213
- LLDP MIB, standardized in the international standard IEE 802.1AB
- LLDP PNIO-MIB, standardized in the international IEC standard 61158-6-10

Micro Memory Card (MMC)

Micro Memory Cards are memory media for CPUs and CPs. Their only difference to the Memory Card is the smaller size.

Module parameters

Module parameters are values which can be used to configure module behavior. A distinction is made between static and dynamic module parameters.

MPI

The multipoint interface (MPI) represents the programming device interface of SIMATIC S7. It enables multiple nodes (PGs, text-based displays, OPs) to be operated simultaneously by one or more CPUs. Each node is identified by its unique (MPI) address.

MPI address

→ *MPI*

NCM PC

→ *SIMATIC NCM PC*

Nesting depth

A block can be called from another by means of a block call. Nesting depth is referred to as the number of simultaneously called code blocks.

Network

A network consists of one or more interconnected subnets with any number of nodes. Several networks can exist alongside each other.

Network

A network is a larger communication system that allows data exchange between a large number of nodes.

All the subnets together form a network.

Non-isolated

The reference potential of the control and on-load power circuits of non-isolated I/O modules is electrically interconnected.

NTP

The Network Time Protocol (NTP) is a standard for synchronizing clocks in automation systems via Industrial Ethernet. NTP uses the UDP wireless network protocol.

OB

→ *Organization blocks*

OB priority

The CPU operating system distinguishes between different priority classes, for example, cyclic program processing, hardware interrupt controlled program processing. Each priority class is assigned organization blocks (OBs) in which the S7 user can program a response. The OBs are assigned different default priority classes. These determine the order in which OBs are executed or interrupt each other when they appear simultaneously.

Operating state

SIMATIC S7 automation systems know the following operating states: STOP, START, RUN.

Operating system

The CPU operating system organizes all the CPU functions and processes which are not associated with a specific control task.

Organization blocks

Organization blocks (OBs) form the interface between the CPU operating system and the user program. The order in which the user program is executed is defined in the organization blocks.

Parameters

1. Variable of a STEP 7 code block
2. Variable for declaring module response (one or several per module). All modules have a suitable basic factory setting which can be customized in STEP 7.
There are static and dynamic parameters.

Parameters, dynamic

Unlike static parameters, you can change dynamic module parameters during runtime by calling an SFC in the user program, e.g. limit values of an analog signal input module.

Parameters, static

Unlike dynamic parameters, static parameters of modules cannot be changed by the user program. You can only modify these parameters by editing your configuration in STEP 7, for example, modification of the input delay parameters of a digital signal input module.

PC station

→ *SIMATIC PC Station*

PG

→ *Programming device*

PLC

→ *Programmable logic controller*

PLC

A PLC in the context of SIMATIC S7 --> is a programmable logic controller.

PNO

Technical committee that defines and additional develops the PROFIBUS and PROFINET standards with the following homepage: http://www.profinet.com.

Prioritized startup

The term prioritized startup denotes the PROFINET functionality for accelerating the startup of IO devices operated on a PROFINET IO system with RT and IRT communication.

The function reduces the time that configured IO devices require in order to return to cyclic user data exchange in the following scenarios:

- After the power supply has returned
- After a station has come back online
- After the activation of IO devices

Priority class

The S7 CPU operating system provides up to 26 priority classes (or "Program execution levels"). Specific OBs are assigned to these classes. The priority classes determine which OBs interrupt other OBs. Multiple OBs of the same priority class do not interrupt each other. In this case, they are executed sequentially.

Process image

The process image is part of CPU system memory. At the start of cyclic program execution, the signal states at the input modules are written to the process image of the inputs. At the end of cyclic program execution, the signal status of the process image of the outputs is transferred to the output modules.

Process-Related Function

→ *PROFINET Component*

Product version

The product version identifies differences between products which have the same order number. The product version is incremented when forward-compatible functions are enhanced, after production-related modifications (use of new parts/components) and for bug fixes.

PROFIBUS

Process Field Bus - European field bus standard.

PROFIBUS device

A PROFIBUS device has at least one PROFIBUS link with an electric interface (RS485) or an optical interface (polymer optical fiber, POF).

A PROFIBUS device cannot take part directly in PROFINET communication, but must be implemented by means of PROFIBUS master with PROFINET link or Industrial Ethernet/PROFIBUS link (IE/PB Link) with proxy functionality.

PROFIBUS DP

A PROFIBUS with the DP protocol that complies with EN 50170. DP stands for distributed peripheral (IO) = fast, real-time, cyclic data exchange. From the perspective of the user program, the distributed IOs are addressed in exactly the same way as the central IOs.

PROFINET

Within the framework of Totally Integrated Automation (TIA), PROFINET is the consistent additional development of:

- PROFIBUS DP, the established fieldbus and
- Industrial Ethernet, the communication bus for the cell level.

The experience gained from both systems was and is being integrated in PROFINET.

PROFINET as an Ethernet-based automation standard from PROFIBUS International (previously PROFIBUS Nutzerorganisation e. V.) defines a vendor-independent communication, automation, and engineering model.

PROFINET ASIC

→ *ASIC*

PROFINET CBA

As part of PROFINET, PROFINET CBA (Component Based Automation) is an automation concept that focuses on the following:

- Implementation of modular applications
- Machine - machine communication

PROFINET CBA lets you create distributed automation solutions, based on default components and partial solutions. This concept meets the demand for a greater modularity in the field of mechanical and systems engineering by extensive distribution of intelligent processes.

With Component Based Automation you can implement complete technological modules as standardized components that can be used in large systems.

You create the modular, intelligent components of the PROFINET CBA in an engineering tool (which may differ according to the device manufacturer). Components that are formed from SIMATIC devices are created with STEP 7, and are interconnected using the SIMATIC iMAP tool.

PROFINET Component

A PROFINET component includes the entire data of the hardware configuration, the parameters of the modules, and the corresponding user program. The PROFINET component is made up as follows:

- Technological Function

  The (optional) technological (software) function includes the interface to other PROFINET components in the form of interconnectable inputs and outputs.

- Device

  The device is the representation of the physical programmable controller or field device including the I/O, sensors and actuators, mechanical parts, and the device firmware.

PROFINET device

A PROFINET device always has at least one Industrial Ethernet port. A PROFINET device can also be operated as proxy to act as representative that safeguards Ethernet communication between PROFIBUS devices (PROFIBUS slaves connected to an existing PROFIBUS interface) and additional PROFINET devices on the Ethernet.

PROFINET IO

As part of PROFINET, PROFINET IO is a communication concept that is used to implement modular, distributed applications.

PROFINET IO allows you to create automation solutions, which are familiar to you from PROFIBUS.

PROFINET IO is implemented using the PROFINET standard for programmable controllers.

The STEP 7 engineering tool helps you to structure and configure an automation solution.

In STEP 7 you have the same application view, regardless of whether you are configuring PROFINET devices or PROFIBUS devices. Program your user program in the same way for both PROFINET IO and PROFIBUS DP, since you will use the extended blocks and system status lists for PROFINET IO.

PROFINET IO controller

Device used to address the connected IO devices. This means that the IO controller exchanges input and output signals with assigned field devices. The IO controller is often the controller on which the automation program runs.

PROFINET IO device

A distributed field device that is assigned to one of the IO controllers (e.g. remote IO, valve terminals, frequency converters, switches)

PROFINET IO Supervisor

Programming device, PC or HMI device used for commissioning and diagnostics.

PROFINET IO system

PROFINET IO controller with assigned PROFINET IO devices.

Programmable logic controller

Programmable controllers (PLCs) are electronic controllers whose function is stored as a program in the control unit. The structure and wiring of the device does not therefore depend on the controller's function. A programmable logic controller is structured like a computer. It consists of a CPU with memory, input/output modules and an internal bus system. The IOs and the programming language are oriented to control engineering needs.

Programming device

Programming devices are essentially compact and portable PCs which are suitable for industrial applications. They are identified by a special hardware and software for programmable logic controllers.

Proxy

The PROFINET device with proxy functionality is the substitute for a PROFIBUS device on Ethernet. The proxy functionality allows a PROFIBUS device to communicate not only with its master but also with all nodes on PROFINET.

With PROFINET, existing PROFIBUS systems can be integrated into the PROFINET communication with the aid of an IE/PB link, for example. The IE/PB link then handles communication via PROFINET on behalf of the PROFIBUS components.

In this way, you can link both DPV0 and DPV1 slaves to PROFINET.

Proxy

→ *Proxy*

Proxy functionality

→ *Proxy*

RAM

RAM (Random Access Memory) is a semiconductor read/write memory.

Real Time

Real time means that a system processes external events within a defined time.

Determinism means that a system reacts in a predictable (deterministic) manner.

In industrial networks, both these requirements are important. PROFINET meets these requirements. PROFINET is implemented as a deterministic real-time network as follows:

- The transfer of time-critical data between different stations over a network within a defined interval is guaranteed.

  To this end, PROFINET has an optimized communication channel for real-time communication: real time (RT): Real Time (RT).
- An exact prediction of the time at which the data transfer takes place is possible.
- It is guaranteed that problem-free communication using other standard protocols, for example, industrial communication for a programming device/PC, can take place within the same network.

Real Time

→ *Real Time*

Reduction ratio

The reduction rate determines the send/receive frequency for GD packets on the basis of the CPU cycle.

Reference ground

→ *Ground*

Reference potential

Voltages of participating circuits are referenced to this potential when they are viewed and/or measured.

Restart

On CPU start-up (e.g. after is switched from STOP to RUN mode via selector switch or with POWER ON), OB100 (restart) is initially executed, prior to cyclic program execution (OB1). On restart, the input process image is read in and the STEP 7 user program is executed, starting at the first instruction in OB1.

Retentivity

A memory area is considered retentive if its contents are retained even after a power loss and transitions from STOP to RUN. The non-retentive area of memory flag bits, timers and counters is reset following a power failure and a transition from the STOP mode to the RUN mode.

Retentive can be the:

- Bit memory
- S7 timers
- S7 counters
- Data areas

Router

A router interconnects two subnets. A router works in a similar way to a switch. With a router, however, you can also specify which communication nodes may communicate via the router and which may not. The communication nodes on various sides of a router can only communicate with one another if you have explicitly enabled communication between these nodes via the router. Real-time data cannot be exchanged beyond subnet boundaries.

RT

→ *Real Time*

Runtime error

Errors occurred in the PLC (that is, not in the process itself) during user program execution.

Segment

→ *Bus segment*

Send cycle

Period between two successive intervals for IRT or RT communication. The send cycle is the shortest possible transmit interval for exchanging data. The calculated update times are multiples of the send cycle.

The minimum possible update time thus depends on the minimum send cycle of the IO controller that can be set.

If both the IO controller and the IO device support a send cycle of 250 µs, you can achieve a minimum update time of 250 µs.

It is also possible to operate IO devices that only support a send cycle of 1 ms on an IO controller that works with a send cycle of 250 µs. The minimum update time for the IO devices concerned is then at least 1 ms, however.

SFB

→ *System function block*

SFC

→ *System function*

Shared Device

The "Shared Device" functionality makes it possible to distribute the submodules of an IO devices to different IO controllers.

Signal module

Signal modules (SM) form the interface between the process and the PLC. There are digital input and output modules (input/output module, digital) and analog input and output modules. (Input/output module, analog)

SIMATIC

The term denotes Siemens AG products and systems for industrial automation.

SIMATIC NCM PC

SIMATIC NCM PC is a version of STEP 7 tailored to PC configuration. For PC stations, it offers the full range of functions of STEP 7.

SIMATIC NCM PC is the central tool with which you configure the communication services for your PC station. The configuration data generated with this tool must be downloaded to the PC station or exported. This makes the PC station ready for communication.

SIMATIC NET

Siemens Industrial Communication division for Networks and Network Components.

SIMATIC PC Station

A "PC station" is a PC with communication modules and software components within a SIMATIC automation solution.

Slave

A slave can only exchange data after being requested to do so by the master.

SNMP

SNMP (Simple Network Management Protocol) makes use of the connectionless UDP transport protocol. It consists of two network components, similar to the client/server model. The SNMP manager monitors the network nodes and the SNMP agents collect the various network-specific information in the individual network nodes and stores it in a structured form in the **MIB** (Management Information Base). This information allows a network management system to run detailed network diagnostics.

SSL

→ *System status list*

STARTUP

A START-UP routine is executed at the transition from STOP to RUN mode. Can be triggered by means of the mode selector switch, or after power on, or by an operator action on the programming device. An S7-300 performs a restart.

STEP 7

STEP 7 is an engineering system and contains programming software for the creation of user programs for SIMATIC S7 controllers.

Subnet

All the devices connected by switches are located in the same network - a subnet. All the devices in a subnet can communicate directly with each other.

All devices in the same subnet have the same subnet mask.

A subnet is physically restricted by a router.

Subnet mask

The bits set in the subnet mask decides the part of the IP address that contains the address of the subnet/network.

In general:

- The network address is obtained by an AND operation on the IP address and subnet mask.
- The node address is obtained by an AND NOT operation on the IP address and subnet mask.

Substitute value

Substitute values are configurable values which output modules transfer to the process when the CPU switches to STOP mode.

In the event of an I/O access error, a substitute value can be written to the accumulator instead of the input value which could not be read (SFC 44).

Switch

Network components used to connect several computers or network segments in a local network (LAN).

In contrast to PROFIBUS DP, Industrial Ethernet consists of point-to-point connections: Each communication node is connected directly with one other communication node.

If a communication node needs to be connected to several other communication nodes, this communication node is connected to the port of an active network component- a switch. Other communications nodes (including switches) can then be connected to the other ports of the switch. The connection between a communication node and the switch remains a point-to-point link.

The task of a switch is therefore to regenerate and distribute received signals. The switch "learns" the Ethernet address(es) of a connected PROFINET device or other switches and forwards only the signals intended for the connected PROFINET device or connected switch.

A switch has a certain number of ports). At each port, connect a maximum of one PROFINET device or an additional switch.

Two switch variants are available for PROFINET IO systems: as external switches with enclosure, or as integrated component of an S7 CPU or S7 CP, or as integrated switch of a distributed I/O system ET 200, such as in the S7-CPU 317-2 PN/DP.

The SIEMENS SCALANCE X product family contains switches with electrical and optical ports, or with a combination of both variants. SCALANCE X202-2IRT, for example, provides 2 electrical and 2 optical ports and supports IRT communication.

With STEP 7, you can configure, analyze and address switches from the SCALANCE X device family as PROFINET IO devices.

System diagnostics

System diagnostics refers to the detection, evaluation, and signaling of errors that occur within the PLC, for example programming errors or module failures. System errors can be indicated by LEDs or in **STEP 7**.

System function

A system function (SFC) is a function that is integrated in the operating system of the CPU and can be called in the STEP 7 user program, when necessary.

System function block

A system function block (SFB) is a function block integrated in the CPU operating system that can be called in the STEP 7 user program when required.

System memory

System memory is an integrated RAM memory in the CPU. System memory contains the address areas (e.g. timers, counters, bit memories) and data areas that are required internally by the operating system (for example, communication buffers).

System status list

The system status list contains data that describes the current status of a SIMATIC S7. You can always use this list to obtain an overview of the following points:

- Status of the SIMATIC S7 extension.
- The current CPU configuration and configurable signal modules.
- The current states and processes in the CPU and in configurable signal modules.

Terminating resistor

The terminating resistor is used to avoid reflections on data links.

Timer

→ *Timers*

Timers

Timers are part of CPU system memory. The content of timer cells is automatically updated by the operating system, asynchronously to the user program. STEP 7 instructions are used to define the precise function of the timer cell (for example, on-delay) and to initiate their execution (for example, start).

TOD interrupt

→ *Interrupt, time-of-day*

Token

Allows access to the bus for a limited time.

Topology

Network structure. Commonly used structures:

- Linear bus topology
- Ring topology
- Star topology
- Tree topology

Topology configuration

All the interconnected ports of the PROFINET devices in STEP 7 projects and their relationships to each other.

Transmission rate

Data transfer rate (in bps)

Twisted-pair

Fast Ethernet via twisted-pair cables is based on the IEEE 802.3u standard (100 Base-TX). The transmission medium is a shielded 2x2 twisted-pair cable with an impedance of 100 Ohm (AWG 22). The transmission characteristics of this cable must meet the requirements of category 5.

The maximum length of the connection between the terminal and the network component must not exceed 100 m. The connections are implemented according to the 100 Base-TX standard with the RJ-45 connector system.

UDT

User Defined Type: User-defined data type with any design.

Ungrounded

Having no direct electrical connection to ground

Update time

Within this time interval, an IO device/IO controller in the PROFINET IO system is supplied with new data by the IO controller/IO device. The send cycle can be configured separately for each IO device and determines the interval at which data are sent from the IO controller to the IO device (outputs) as well as data from the IO device to the IO controller (inputs).

User program

In SIMATIC, we distinguish between the operating systems of the CPU and user programs. The user program contains all instructions, declarations and data for signal processing through which a system or process can be controlled. It is assigned to a programmable module (for example CPU, FM) and can be structured in smaller units (blocks).

Varistor

Voltage-dependent resistor

WAN

A network beyond LAN boundaries which allows, for example, intercontinental communication. Legal rights do not belong to the user but to the provider of the communication network.

Index

A

Actuator/Sensor Interface, 57, 94
Address
  Analog module, 131
  Digital module, 130
  MPI, PROFIBUS DP, 59
  Technological functions, 132
Addressing
  Device name, 137
  Integrated I/O, 132
  IP address, 137
  On PROFIBUS DP, 135
  on PROFINET IO, 136
  slotspecific,
  User-specific, 129
Ambient condition
  Climatic, 259
  Mechanical, 258
  Operating conditions, 258
Analog module, addresses, 131
Approvals, 251
  CE, 252
  CSA, 252
  FM, 253
  IEC 61131, 254
  Marine, 254
  UL, 252
  Use in industrial environments, 254
  Use in residential areas, 255
ASI (Actuator/Sensor Interface), 57, 94

B

Backup
  Firmware, 191
  Project data, 195
Baud rate
  Maximum, 58
  MPI cable length, 63
  PROFIBUS cable length, 64
  Stub cables, 64
Bus cable, 65
  Bus connector, 124
  Installation, 66
  Properties, 65
  Versions available, 65
Bus connector, 124
  Fast Connect, 124
  MPI, PROFIBUS wiring, 124
  PROFINET, 126
  removing, 125
  Setting the terminating resistor, 125
Bus connector
  Installing, 125125
Bus termination, 70
Bus topology with SFC 103, 215

C

Cabinet
  Dimensions, 40
  EMC-compliant configuration, 269
  power loss dissipated, 42
  Selection, 39
  Types, 40
Cable
  Outside buildings:, 277
  Preparing, 112
  Proper routing, 265
  Routing equipotential conductors, 274
  shield, 272
  Shield connection element, 121
  Within buildings, 275
Cable length
  Extension with RS485 repeater, 64
  Maximum, 67
  MPI subnet, 63
  PROFIBUS subnet, 64
  PROFINET, 85
  Stub cables, 64
Cable shield, 50
Cable shielding, 266
CE approval, 252
Commissioning
  Check list, 145
  CPU as DP master, 168
  CPU as DP slave, 172
  CPU memory reset, 150
  Errors, 144
  Hardware, 141, 142
  Micro Memory Card, 147
  Module, 147

PROFIBUS DP, 166
PROFINET IO, 180
Software, 143, 144
Commissioning the module
connecting a PG, 155
Monitoring and modifying variable, 161
Commissioning the DP master
CPU 31x PN/DP, 168
CPU 31x-2 DP, 168
CPU 31xC-2 DP, 168
Commissioning the DP slave
CPU 31x PN/DP, 173
CPU 31x-2 DP, 173
CPU 31xC-2 DP, 173
Component Based Automation (CBA), 79
Configuring
Examples for subnets, 68
General information about the subnet, 56
MPI/PROFIBUS subnet, 58
Procedure for the PROFINET IO system, 182
PROFIBUS subnet, 73
Configuring, basics, 29
Central unit, 30
Component dimensions, 32
Expansion module, 30
Grounding, 43, 49
Installation, 31
Load power supply, 54
Module arrangement, 35
Protective measures, 43
Specified clearance dimensions, 34
Subnet, 56
Connecting
PG, 155, 156, 157, 158
Sensors and actuators, 111
Spring terminals, 111
ungrounded/grounded, 160
Connecting actuators, 111
Connecting sensors, 111
Constant bus cycle time, 170
Controller, 82
PROFINET CBA, 82
PROFINET IO, 82
Controlling, 209
Coupling
Interference-proof, 37
CPU
CPU memory reset, 150, 154
Wiring, 109
Wiring conditions, 106
CPU as DP master, 168
Constant bus cycle time, 170
CPU 31x PN/DP, 168
CPU 31xC-2 DP, 168
CPU 3x-2 DP, 168
Diagnostics, 230
Isochronous Updating of Process Image Partitions, 170
Startup of CPU 31x-2 DP, 169
Sync/Freeze, 171
CPU as DP slave, 172
CPU 31x PN/DP, 173
CPU 31x-2 DP, 173
CPU 31xC-2 DP, 173
GSD files, 172
Startup, 173
CPU memory reset, 150
Formatting the Micro Memory Card, 154
Internal sequence on the CPU, 152
MPI/DP interface parameters, 153
With mode selector switch, 151
CSA approval, 252

D

Data
Back up, 195
Reading/saving service data, 205
Data consistency, 135, 137
Degree of protection IP 20, 260
Delivery state of the CPU
Lamp images during reset, 198
Properties, 197
Restoring, 197
Detecting operating mode transitions
In the DP master, 173
In the DP slave, 169
Device ID, 242
Diagnostic address
Direct data exchange, 233
DP master and DP slave, 231
PROFIBUS DP, 236
PROFIBUS DP, 236
Diagnostics, 230
configured address range, 243
Diagnostic buffer, 214
DP master, 230
LED display, 213
LEDs of the CPU, 219
Maintenance, 249
PROFINET IO, 247
SF LED for hardware faults, 222
SF LED for software errors, 221
Type of error, 212

using "Diagnosing hardware",
with LEDs, 219
with system functions, 214
Digital module
Address, 130
Protection against inductive overvoltage, 290
Digital output module
Replacement fuse, 202
Replacing fuses, 203
Direct data exchange, 233
Disconnecting the wiring, 119
DP Master, interrupts, 238

E

Electromagnetic compatibility (EMC), 255
Electromagnetic interference, 263
Electrostatic discharge, 255
EMC (Electromagnetic compatibility), 255
Disturbance variables, 255
Radio interference, 256
EMC (ElectroMagnetic Compatibility), 263
EMC-compliant installation, 267
Ground connections, 267
Rules, 265
Special measures, 266
Equipotential bonding, 273
Equipotential bonding conductor, 50
Error LEDs, 219
Error-free operation, general rules, 261
Example
CPU 314C-2 DP as MPI and PROFIBUS node, 72
Data exchange between the DP master and DP slave, 176
Direct data exchange via DP CPUs, 179
Isolated module, 47
Load power supply, 55
Maximum distance, 69
Non-isolated module, 48
Routing, 93
Terminating resistor, 70
Using blocks to read slave diagnostics information, 234

F

Fail-safe system, 292
Fast Connect, 124
Disconnecting, 119
Twisted pair, 87
Wiring, 116, 118
Wiring rules, 117
Fast Connect technology, 115
Fieldbus integration, 77
Firmware
Backup on Micro Memory Card, 189
Update, 192
Update, 192
Update online, 193
FM approval, 253
Forcing, 210
Front connector
Removing the coding, 200, 201
Front connectors, 111
encoding, 114
Module assignment, 111
plugging, 114
Preparing the cables, 112
Wiring, 113
Wiring conditions, 106
wiring to spring terminals, 111

G

Ground connections, 267
Grounded power supply, 43
Grounding
Cable shield, 50
CPU 31xC overview, 52
Load circuit, 50
measures, 49
non-isolated/isolated, 46
Overview, 53
Group error LED
Hardware faults, 222
Software errors, 221
GSD files, 172

I

I&M data
Read / write, 206
SSL partial lists, 207
Identification and maintenance data, 206
IEC 61131, 254
Initial power on, 149
installation
Coupling, 37
EMC compatible, 263
Horizontal, 31
Layout of the modules, 35
Reference potential, grounded, 45

Vertical, 31
Installation
in cabinets, 39
Layout of the modules, 36
Module, 100
Installation
Reference potential, grounded, 4444
Installation - examples
Maximum configuration, 38
MPI subnet, 68
PROFIBUS subnet, 71
PROFINET subnet, 88
Protection against overvoltage, 288
S7-300, 25
Installation Dimensions of the Modules, 32
Installation, basic rules, 23
Installing
EMC-compliant, 267
Module, 200
Mounting rail, 97
Wall mounting (EMC-compliant), 270
Insulation test, 260
Interconnection
PROFIBUS and PROFINET, 77
Interface
MPI, 61
Parameter handling during CPU memory reset, 153
PROFIBUS DP, 62
PtP, 94
Send cycle, 85
Update time, 85
Interface module, 36
Interference-proof coupling, 37
Interrupt data
Generating a diagnostics interrupt, 246, 247
Process interrupt, structure, 245
Interrupts on the DP Master, 238
IP address assignment, 137
Isochronous mode, 170

L

Labeling strips, 120
Layout on the racks, 35, 36
LED, 213
Length of the network, 85
Lightning protection, 278
Equipotential bonding, 281, 282, 284, 286
Lightning protector, 284, 286
Safety zones concept, 279
Load circuit, 50
Load current determination, 54
Load power supply
Example, 55
Properties, 54
Load voltage, reference potential, 51

M

Mains, 43
Maintenance, 249
Backup of firmware on Micro Memory Card, 191
Backup of the project data, 195
Delivery state, 197
Firmware update, 191
Maintenance, 249
Module replacement, 198
Replacing fuses, 202
Marine approval, 254
Maximum configuration, 38
MIB (Management Information Base), 217
Micro Memory Card, 154
Firmware backup, 189
Formatting, 154
Initial power on, 149
Inserting/removing, 148
Module
Assembly dimensions, 32
Assigning slot numbers, 102
Commissioning, 147
installing, 100, 101, 200
Isolated, 46
labeling, 120
Layout on the rack, 35, 36
Micro Memory Card, 147
Non-isolated, 46
removing, 199
replacing, 198
Sequence, 100
Start addresses, 127
Module replacement
Reaction of the S7-300, 201
Rules, 100, 198
Monitoring, 161
Monitoring and modifying variable, 161
establishing a connection to the CPU, 164
Modifying outputs in STOP mode, 165
Setting the trigger points, 163
Variable table, 162
Mounting rail, 97
connecting the protective conductor, 107
Fixation, 98
installing, 99
Length, 32

Mounting the ground conductor, 97
MPI (Multi Point Interface), 56
Baud rate, maximum, 58
Number of nodes, maximum, 59
MPI (multi-point interface)
Interface, 61
MPI address, 59
MPI interface
Connectable devices, 61
Parameter handling during CPU memory reset, 153
MPI subnet
Cable length, 63
CPU 314C-2 DP as node, 72
Example, 68
Maximum distance, 69
Terminating resistor, 70
MPI/DP interface
Commissioning the IO system, 181
Parameter handling during CPU memory reset, 153
Multi-Point Interface, 56

N

Network diagnostics, 217
Number of nodes, maximum, 59

O

Operating system, 189
Overview
CPU 31xC grounding, 52
Diagnostic information for PROFINET, 248
Grounding, 53
PROFINET IO functions, 90
S7-300 components, 26
Overvoltage protection, 278
Components, 285, 287
Example for EMERGENCY STOP, 291
Inductive overvoltage, 290
Sample configuration, 288

P

PG
Access to remote networks, 92
Connecting, 155, 156, 157, 158
MPI addresses for service PGs, 159
Ungrounded/grounded configuration, 160
Point-to-point connection, 57
Potential difference, 50
Power supply module
Selecting the mains voltage, 108
Wiring, 109
Wiring conditions, 106
PROFIBUS, 59
PROFIBUS device, 74
PROFIBUS DP
Addressing, 135
Addressing the user data area, 135
Baud rate, maximum, 58
Commissioning, 166
Comparison with PROFINET, 75
Direct data exchange, 178
DP address ranges, 167
DP diagnostic addresses, 167
Number of nodes, maximum, 59
Software required, 166
PROFIBUS DP address, 59
PROFIBUS DP interface, 62
Connectable devices, 63
Diagnostics with status and error LEDs, 224
Operating modes with two DP interfaces, 62
Troubleshooting, 224
PROFIBUS subnet, 64
Bus cable, 65
Cable length, 64
CPU 314C-2 DP as node, 72
Example, 71
PROFINET, 136
Cable length, 85
CBA (Component based Automation), 57
Commissioning, 214
Configuring the IO system, 182
Controller, 82
IO and CBA, distinguishing features, 81
IO and CBA, interaction, 80
Length of the network, 85
Send cycle, 84
Twisted pair, 85
Update time, 83
Update times for CPU 319-3 PN/DP, 85
PROFINET CBA, 82
Controller, 82
Distinguishing features compared to IO, 81
Interaction with IO, 80
PROFINET device
Definition, 73
Status and error displays, 226
PROFINET interface
Commissioning the IO system, 182
Diagnostics with status and error LEDs, 226
IO device, troubleshooting, 229
Parameter handling during CPU memory reset, 153

Troubleshooting, 227
Update time, 85
PROFINET IO, 136
Address ranges of the CPUs, 180
Addressing, 136
Addressing the user data area, 137
Commissioning, 180
Comparison with PROFIBUS, 75
Controller, 82
Diagnostics, 247
Distinguishing features compared to CBA, 81
Interaction with CBA, 80
Overview of functions, 90
PROFINET IO system
Commissioning, 181
Commissioning via MPI/DP, 181
Commissioning via PROFINET interface, 182
Configuration procedures, 182
CPU startup for operation as intelligent device, 186
CPU startup for operation as IO controller, 185
PROFINET subnet
Example, 88
Units, 73
Protection class, 260
Protective conductor
Connecting with the mounting rail, 107
Fixing screw, 97
Protective grounding, 49
Proxy functionality, 78, 82
PtP (Point-to-Point coupling), 57
PtP interface, 94

R

Radio interference, 256
Recycling, 7
Redundant system, 292
Reference potential
EMC compatible, 267
grounded, 44
ungrounded, 45
Removing a module, 199
Replacing fuses, 203
Router, 92
Routing, 274
RS 485
Bus connector, 66
Maximizing cable lengths, 67
RS 485 repeater, 67

S

S7-300
Accessories, 96
Commissioning, 141
Component overview, 26
Error-free operation, general, 261
Installation, example, 25
Lightning protection, 278
Overvoltage protection, 278
Tools and materials required, 96
Scope of the manual, 3
Scope of this documentation, 15
Segment, 58
Cable lengths, 63
General, 58
Selecting the mains voltage, 108
Send cycle
Odd values, 85
PROFINET, 84
Service data, 205
SF LED, 222
SFB52, 215
SFC 103, 215
SFC 13, 215
SFC 14, 137
SFC 51, 215
SFC 6, 215
SFC14, 135
SFC15, 135, 137
Shield connection element, 121
installing, 122
Terminating the cable, 123
Shielding, 272
Shielding terminals, 33
Shipping conditions, 257
SIMATIC iMap, 79
SIMATIC Manager, 161
Slave diagnostics
Interrupt data, 245
Interrupt status, structure, 245
Module status, structure, 244
reading with blocks, 233
Reading, example, 234
Structure of identifier-related diagnostics, 243
Syntax of the diagnostics datagram, 239
Slot numbers, 102
Slot-specific addressing, 127
SNMP (Simple Network Management Protocol), 217
Specified clearance dimensions, 34
Standards, 251
Startup
as DP slave, 173

CPU 31xC-2 DP as a DP master, 169
CPU as intelligent device, 186
CPU as IO controller, 185
Status and error LEDs
CPU with DP interface, 224
CPU with PROFINET interface, 226
PROFINET IO devices, 229
SF LED, 221, 222
Total, 219
stepping mode, 209
STOP LED, 151, 152
Storage conditions, 257
Stub cables, 64
Baud rate, 64
Length, 64
Subnet
General information, 56
MPI subnet, 58
PROFIBUS subnet, 58, 73
Segment, 63
SYNC/FREEZE, 171
System functions for diagnostics, 214

T

Technical specifications
Electromagnetic compatibility (EMC), 255
Shipping and storage conditions, 257
Standards and certifications, 251
Terminating resistor
MPI subnet, 70
Setting the bus connector, 125
Test voltage, 260
Transfer memory
Address range, 175
Example program, 176
Rules, 177
User data transfer, 174
User data transfer in STOP mode, 178
Trigger points, 163

U

UL approval, 252
ungrounded/grounded, 160
Update
Communication interruption, 191
Using micro memory card, 192
Update
Online,
Update time
CPU 31x PN/DP, 84
PROFINET IO, 83
User data area
Addressing PROFIBUS DP, 135
Addressing PROFINET IO, 137
User data transfer, 174

V

Variable table, 162
Variables, 161
Controlling, 209
Forcing, 210
Monitoring, 209

W

Wiring, 109
Accessories, tools, material, 105
CPU, 109
Fast Connect, 116
Front connectors, 113
Power supply module, 109
Wiring conditions, 106

SIEMENS

SIMATIC

S7-300
S7-300 Module data

Manual

Preface

General technical data 1

Power supply modules 2

Digital modules 3

Principles of analog value processing 4

Principles of analog modules 5

Analog modules 6

Other signal modules 7

Interface modules 8

Parameter sets of signal modules A

Diagnostics data of signal modules B

Dimensional drawings C

Spare parts and accessories for S7-300 modules D

Directive on handling Electrostatic-Sensitive Devices (ESD) E

Service & support F

List of abbreviations G

This description is part of the S7-300 documentation package with the order number: 6ES7398-8FA10-8AB0

02/2013

A5E00105505-08

Legal information

Warning notice system

This manual contains notices you have to observe in order to ensure your personal safety, as well as to prevent damage to property. The notices referring to your personal safety are highlighted in the manual by a safety alert symbol, notices referring only to property damage have no safety alert symbol. These notices shown below are graded according to the degree of danger.

⚠ DANGER
indicates that death or severe personal injury **will** result if proper precautions are not taken.

⚠ WARNING
indicates that death or severe personal injury **may** result if proper precautions are not taken.

⚠ CAUTION
indicates that minor personal injury can result if proper precautions are not taken.

NOTICE
indicates that property damage can result if proper precautions are not taken.

If more than one degree of danger is present, the warning notice representing the highest degree of danger will be used. A notice warning of injury to persons with a safety alert symbol may also include a warning relating to property damage.

Qualified Personnel

The product/system described in this documentation may be operated only by **personnel qualified** for the specific task in accordance with the relevant documentation, in particular its warning notices and safety instructions. Qualified personnel are those who, based on their training and experience, are capable of identifying risks and avoiding potential hazards when working with these products/systems.

Proper use of Siemens products

Note the following:

⚠ WARNING
Siemens products may only be used for the applications described in the catalog and in the relevant technical documentation. If products and components from other manufacturers are used, these must be recommended or approved by Siemens. Proper transport, storage, installation, assembly, commissioning, operation and maintenance are required to ensure that the products operate safely and without any problems. The permissible ambient conditions must be complied with. The information in the relevant documentation must be observed.

Trademarks

All names identified by ® are registered trademarks of Siemens AG. The remaining trademarks in this publication may be trademarks whose use by third parties for their own purposes could violate the rights of the owner.

Disclaimer of Liability

We have reviewed the contents of this publication to ensure consistency with the hardware and software described. Since variance cannot be precluded entirely, we cannot guarantee full consistency. However, the information in this publication is reviewed regularly and any necessary corrections are included in subsequent editions.

Siemens AG
Industry Sector
Postfach 48 48
90026 NÜRNBERG
GERMANY

A5E00105505-08
Ⓟ 02/2013 Technical data subject to change

Copyright © Siemens AG 2013.
All rights reserved

Preface

Purpose of the manual

The information contained in this manual can be used as a reference to operating, to functions, and to the technical data of the signal modules, power supply modules and interface modules of the S7-300.

Refer to the relevant S7-300 or ET 200M manuals to find out how to assemble and wire the modules.for system installation.

Basic knowledge required

This manual presumes general knowledge in the field of automation engineering.

Range of validity of this manual

The manual describes the components based on the data valid at the time of its release.

SIEMENS reserves the right to include product information for each new module of a later version.

Changes compared to the previous version

Changes / enhancements compared to the previous version described in this manual:

- New digital input module SM 321 DI 16 x DC 24V/125V
  6ES7321-7EH00-0AB0
- Errors in the previous version of this manual have been corrected in the present version.

Position in the overall documentation structure

The following documentation forms part of the S7-300 documentation package. You can also find this, along with the associated entry ID, on the Internet (http://support.automation.siemens.com/WW/view/en/10805159/133300).

Name of the manual	Description
Manual CPU 31xC and CPU 31x, technical data Entry ID: 12996906	Control and display elements, communication, memory concept, cycle and reaction times, technical data
Operating Instructions S7-300, CPU 31xC and CPU 31x: Installation Entry ID: 13008499	Project design, installation, wiring, addressing, commissioning, maintenance and test functions, diagnostics and troubleshooting.
System Manual PROFINET system description Entry ID: 19292127	Basic description of PROFINET: Network components, data exchange and communication, PROFINET IO, Component-based Automation, application example of PROFINET IO and Component-based Automation.
Programming Manual Migration from PROFIBUS DP to PROFINET IO Entry ID: 19289930	Guideline for migration from PROFIBUS DP to PROFINET IO.
Manual • CPU 31xC: Technological functions Entry ID: 12429336 • CD containing examples	Description of the technological functions: positioning, counting, point-to-point coupling, loop control. The CD contains examples of the technological functions.
YOU ARE CURRENTLY READING the Manual S7-300 Automation System: Module Data Entry ID: 8859629	Description of the functions and technical data of signal/ power supply/ interface modules.
Instructions List • CPU 31xC, CPU 31x, IM151-7 CPU, IM154-8 CPU, BM 147-1 CPU, BM 147-2 CPU Entry ID: 13206730 • CPU 312, CPU 314, CPU 315-2 DP CPU 315-2 PN/DP, CPU 317-2 PN/DP, CPU 319-3 PN/DP as of V3.0 Entry ID: 31977679	List of the CPU's instruction set and corresponding execution times. List of executable blocks (OBs, SFCs, SFBs) and their execution times.
Getting Started Available anthology of Getting Started manuals: • S7-300 Getting Started Entry ID: 15390497 • PROFINET Getting Started Collection Entry ID: 19290251	Using concrete examples, the Getting Started documentation provides step-by-step instructions focused on commissioning a fully functional application.

Other manuals on S7-300 and ET 200M

Name of the manual	Description
Reference Manual • CPU Data: CPU 312 IFM - 318-2 DP • Entry ID: 8860591	Control and display elements, communication, memory concept, cycle and reaction times, technical data
Software Installation Manual S7-300 Automation System: Installation: CPU 312 IFM – 318-2 DP Entry ID: 15390415	Project design, installation, wiring, addressing, commissioning, maintenance and test functions, diagnostics and troubleshooting.
Configuration Manual ET 200M signal modules for process automation Entry ID: 7215812	Description of integration in process automation, parameter configuration using SIMATIC PDM, digital input modules, digital output modules.
Manual Distributed I/O Device ET 200M HART analog modules Entry ID: 22063748	Description of configuration and commissioning of HART analog modules.
Manual Distributed I/O Device ET 200M Entry ID: 1142798	Description of configuration, assembly and wiring.
Manual SM 335 - High-speed analog mixed module for SIMATIC S7-300 Entry ID: 1398483	Description of how to use the SM 335 module in a SIMATIC S7-300. Overview of operations, descriptions of functions, and technical data relating to the SM 335.

Sign posts

The manual contains various features supporting quick access to specific information:

- At the beginning of the manual, you will find a complete table of contents.
- Key terms are explained in the glossary.
- You can use the index to find the key parts of the manual.

Approvals

See section Standards and approvals (Page 15).

CE approval

See section Standards and approvals (Page 15).

Mark for Australia (C-Tick-Mark)

See section Standards and approvals (Page 15).

Standards

See section Standards and approvals (Page 15).

Recycling and disposal

Since the S7-300 components only contain low levels of harmful substances, they are suitable for recycling. For ecologically compatible recycling and disposal of your old device, contact a certificated disposal service for electronic scrap.

Note on IT security

Siemens offers IT security mechanisms for its automation and drive product portfolio in order to support the safe operation of the plant/machine. We recommend that you inform yourself regularly on the IT security developments regarding your products. You can find information on this on the Internet (http://support.automation.siemens.com).

You can register for a product-specific newsletter here.

For the safe operation of a plant/machine, however, it is also necessary to integrate the automation components into an overall IT security concept for the entire plant/machine, which corresponds to the state-of-the-art IT technology. You can find information on this on the Internet (http://www.siemens.com/industrialsecurity).

Products used from other manufacturers should also be taken into account here.

Table of contents

Preface 3

1 General technical data 15

1.1 Standards and approvals 15

1.2 Electromagnetic compatibility 20

1.3 Shipping and storage conditions for modules and backup batteries 22

1.4 Mechanical and climatic environmental conditions for S7-300 operation 23

1.5 Specification of dielectric tests, protection class, degree of protection, and rated voltage of S7-300 25

1.6 Rated voltages of S7-300 25

1.7 SIPLUS S7-300 Modules 26

1.8 Environmental conditions for the operation of SIPLUS S7-300 modules 29

2 Power supply modules 31

2.1 Power supply module PS 307; 2 A; (6ES7307-1BA01-0AA0) 32

2.2 Power supply module PS 307; 5 A; (6ES7307-1EA01-0AA0) 35

2.3 Power supply module PS 307; 10 A; (6ES7307-1KA02-0AA0) 38

2.4 Power supply module PS 305; 2 A; (6AG1305-1BA80-2AA0) 41

2.5 Power supply module PS 307; 5 A; (6AG1307-1EA80-2AA0) 44

3 Digital modules 49

3.1 Module overview 50

3.1.1 Digital input modules: 50

3.1.2 Digital output modules 53

3.1.3 Relay output modules 56

3.1.4 Digital IO modules 57

3.2 Steps in selecting and commissioning the digital module 58

3.3 Programming digital modules 59

3.4 Diagnostics of digital modules 60

3.5 How to protect digital modules from inductive overvoltage 62

3.6 Digital input module SM 321; DI 64 x DC 24 V, sinking/sourcing; (6ES7321-1BP00-0AA0) 64

3.7 Digital input module SM 321; DI 32 x DC 24 V; (6ES7321-1BL00-0AA0) 72

3.8 Digital output module SM 321; DI 32 x AC 120 V; (6ES7321-1EL00-0AA0) 76

3.9 Digital input module SM 321; DI 16 x DC 24 V; (6ES7321-1BH02-0AA0) 79

3.10 Digital input module SM 321; DI 16 x DC 24 V High Speed; (6ES7321-1BH10-0AA0) 83

3.11 Digital input module SM 321; DI 16 x 24 VDC; with hardware and diagnostic interrupts (6ES7321-7BH01-0AB0) ... 85
3.11.1 Isochronous mode ... 90
3.11.2 SM 321; DI 16 x DC 24 V - Parameters ... 91
3.11.3 SM 321; DI 16 x DC 24 V - Diagnostics ... 93
3.11.4 SM 321; DI 16 x DC 24 V - Behavior ... 95
3.11.5 SM 321; DI 16 x DC 24 V - Interrupts ... 96

3.12 Digital input module SM 321; DI 16 x DC 24/125 V; with hardware and diagnostic interrupts (6ES7321-7EH00-0AB0) ... 98
3.12.1 Parameters of SM 321; DI 16 x DC 24/125 V ... 102
3.12.2 Diagnostics of SM 321; DI 16 x DC 24/125 V ... 103
3.12.3 Interrupts of SM 321; DI 16 x DC 24/125 V ... 105

3.13 Digital input module SM 321; DI 16 x DC 24 V; source input; (6ES7321-1BH50-0AA0) ... 107

3.14 Digital input module SM 321; DI 16 x UC 24/48 V; (6ES7321-1CH00-0AA0) ... 110

3.15 Digital input module SM 321; DI 16 x DC 48-125 V; (6ES7321-1CH20-0AA0) ... 113

3.16 Digital input module SM 321; DI 16 x AC 120/230 V; (6ES7321-1FH00-0AA0) ... 117

3.17 Digital input module SM 321; DI 8 x AC 120/230 V; (6ES7321-1FF01-0AA0) ... 120

3.18 Digital input module SM 321; DI 8 x AC 120/230 V ISOL; (6ES7321-1FF10-0AA0) ... 124

3.19 Digital output module SM 322; DO 64 x DC 24 V/0.3 A sourcing; (6ES7322-1BP00-0AA0) ... 127

3.20 Digital output module SM 322; DO 64 x DC 24 V/0.3 A Sinking (6ES7322-1BP50-0AA0) ... 135

3.21 Digital output module SM 322; DO 32 x DC 24 V/ 0.5 A; (6ES7322-1BL00-0AA0) ... 143

3.22 Digital output module SM 322; DO 32 x AC 120/230 V/1 A; (6ES7322-1FL00-0AA0) ... 147

3.23 Digital output module SM 322; DO 16 x DC 24 V/ 0.5 A; (6ES7322-1BH01-0AA0) ... 151

3.24 Digital output module SM 322; DO 16 x DC 24 V/0.5 A: (6ES7322-8BH10-0AB0) ... 155
3.24.1 Parameters of digital output modules ... 160
3.24.2 Diagnosis of digital output modules ... 161
3.24.3 Firmware update via HW Config ... 163
3.24.4 I&M identification data ... 164

3.25 Digital output module SM 322; DO 16 x DC 24 V/0.5 A High Speed; (6ES7322-1BH10-0AA0) ... 165

3.26 Digital output module SM 322; DO 16 x UC 24/48 V; (6ES7322-5GH00-0AB0) ... 169
3.26.1 Parameters of digital output module SM 322 DO 16 x UC24/48 V ... 173

3.27 Digital output module SM 322; DO 16 x AC 120/230 V/1 A; (6ES7322-1FH00-0AA0) ... 175

3.28 Digital output module SM 322; DO 8 x DC 24 V/2 A; (6ES7322-1BF01-0AA0) ... 179

3.29 Digital output module SM 322; DO 8 x DC 24 V/ 0.5 A; with diagnostics interrupt; (6ES7322-8BF00-0AB0) ... 183
3.29.1 SM 322; DO 8 x DC 24 V/0.5 A - Parameters ... 188
3.29.2 SM 322; DO 8 x DC 24 V/0.5 A - Diagnostics ... 189
3.29.3 SM 322; DO 8 x DC 24 V/0.5 A - Behavior ... 191
3.29.4 SM 322; DO 8 x DC 24 V/0.5 A - Interrupts ... 192

3.30 Digital output module SM 322; DO 8 x DC 48-125 V/1.5 A; (6ES7322-1CF00-0AA0) ... 193

3.31 Digital output module SM 322;DO 8 x AC 120/230 V/2 A; (6ES7322-1FF01-0AA0) ... 197

3.32 Digital output module SM 322; DO 8 x AC 120/230 V/2 A ISOL (6ES7322-5FF00-0AB0) 201
3.32.1 Parameters of SM 322; DO 8 x AC 120/230 V/2 A ISOL 205
3.32.2 SM 322; DO 8 x AC 120/230 V/2 A ISOL - Diagnostics 206
3.32.3 SM 322; DO 8 x AC 120/230 V/2 A ISOL - Interrupts.....207

3.33 Relay output module SM 322; DO 16 x Rel. AC 120/230 V; (6ES7322-1HH01-0AA0) 208

3.34 Relay output module SM 322; DO 8 x Rel. AC 230 V; (6ES7322-1HF01-0AA0).....212

3.35 Relay output module SM 322; DO 8 x Rel. 230VAC/5A; (6ES7322-5HF00-0AB0) 217
3.35.1 Parameters of SM 322; DO 8 x Rel. AC 230V/5A 223
3.35.2 SM 322; DO 8 x Rel. AC 230V/5A - Diagnostics 224
3.35.3 SM 322; DO 8 x Rel. AC 230V/5A - Interrupts.....225

3.36 Relay output module SM 322; DO 8 x Rel. AC 230 V/5 A; (6ES7322-1HF10-0AA0) 226

3.37 Digital IO module SM 323; DI 16/DO 16 x DC 24 V/0.5 A; (6ES7323-1BL00-0AA0).....232

3.38 Digital IO module SM 323; DI 8/DO 8 x DC 24 V/0.5 A; (6ES7323-1BH01-0AA0) 236

3.39 Programmable digital IO module SM 327; DI 8/DO 8 x DC 24 V/0.5 A (6ES7327-1BH00-0AB0).....240
3.39.1 Parameters of SM 327; DI 8/DO 8 x 24 VDC/0.5 A.....244
3.39.1.1 Structure of data record 1 of SM 327; DI 8/DO 8 x DC 24 V/0.5 A.....245

4 Principles of analog value processing..... 247

4.1 Overview 247

4.2 Wiring and connecting transducers to analog inputs.....248
4.2.1 Wiring and connecting electrically isolated transducers 249
4.2.2 Wiring non-isolated transducers 251

4.3 Wiring and connecting voltage transducers.....253

4.4 Wiring and connecting current transducers 254

4.5 Wiring and connecting resistance thermometers and resistors.....256

4.6 Wiring and connecting thermocouples.....258
4.6.1 Wiring and connecting thermocouples with internal compensation.....262
4.6.2 Wiring and connecting thermocouples with external compensation.....263

4.7 Wiring and connecting loads/actuators to analog outputs 267
4.7.1 Wiring and connecting loads/actuators to voltage outputs 268
4.7.2 Wiring and connecting loads/actuators to current outputs.....270

5 Principles of analog modules..... 273

5.1 Representation of the values for analog input channels.....275

5.2 Representation of analog values for analog output channels.....292

5.3 Setting the measuring method and ranges of analog input channels.....295

5.4 Response of the analog modules 298
5.4.1 Influence of the power supply and operating state 298
5.4.2 Influence of the range of analog values.....300
5.4.3 Influence of operational limits and basic error limits.....301

5.5 Conversion and cycle times of analog modules 302

5.6 Settling and response times of analog output channels 306

5.7 Programming analog modules ... 307
5.7.1 Parameters of analog input modules ... 308

5.8 Diagnostics of analog modules ... 308
5.8.1 Diagnostics messages of analog input modules ... 309
5.8.2 Diagnostic messages of analog output modules ... 310
5.8.3 Causes of error and troubleshooting at analog input modules ... 311
5.8.4 Causes of error and troubleshooting at analog output modules ... 312

5.9 Interrupts of analog modules ... 313

6 Analog modules ... 315

6.1 Analog module selection and commissioning sequence ... 316

6.2 Module overview ... 317
6.2.1 Analog input modules ... 317
6.2.2 Analog output modules ... 320
6.2.3 Analog I/O modules ... 321

6.3 Analog input module SM 331; AI 8 x 16 bit; (6ES7331-7NF00-0AB0) ... 322
6.3.1 Measurement types and ranges ... 328
6.3.2 Programmable parameters ... 329
6.3.3 Additional information on SM 331; AI 8 x 16 Bit ... 331

6.4 Analog input module SM 331; AI 8 x 16 Bit; (6ES7331-7NF10-0AB0) ... 333
6.4.1 Measurement types and measuring ranges ... 339
6.4.2 Programmable parameters ... 340
6.4.3 Additional information for SM 331; AI 8 x 16 Bit ... 341

6.5 Analog input module SM 331; AI 8 x 14 Bit High Speed; isochrone; (6ES7331-7HF0x-0AB0) ... 345
6.5.1 Measurement types and measuring ranges ... 351
6.5.2 Programmable parameters ... 353
6.5.3 Isochronous mode ... 354
6.5.4 Additional information on SM 331; AI 8 x 14 Bit High Speed, isochrone ... 356

6.6 Analog input module SM 331; AI 8 x 13 Bit; (6ES7331-1KF02-0AB0) ... 357
6.6.1 Measurement types and measuring ranges ... 365
6.6.2 Programmable parameters ... 366
6.6.3 Additional information on SM 331; AI 8 x 13 Bit ... 367

6.7 Analog input module SM 331; AI 8 x 12 bit;(6ES7331-7KF02-0AB0) ... 370
6.7.1 Analog input module SM 331; AI 8 x 12 bit;(6ES7331-7KF02-0AB0) ... 370
6.7.2 Measurement types and ranges ... 381
6.7.3 Programmable parameters ... 384
6.7.4 Additional information on SM 331; AI 8 x 12 Bit ... 385

6.8 Analog input module SM 331; AI 2 x 12 Bit; (6ES7331-7KB02-0AB0) ... 386
6.8.1 Analog input module SM 331; AI 2 x 12 Bit; (6ES7331-7KB02-0AB0) ... 386
6.8.2 Measurement types and measuring ranges ... 396
6.8.3 Programmable parameters ... 398
6.8.4 Additional information on SM 331; AI 2 x 12 Bit ... 399

6.9 Analog input module SM 331; AI 8 x RTD; (6ES7331-7PF01-0AB0) ... 400
6.9.1 Measurement types and measuring ranges ... 407
6.9.2 Programmable parameters ... 410
6.9.3 Additional information on SM 331; AI 8 x RTD ... 412

6.10 Analog input module SM 331; AI 8 x TC; (6ES7331-7PF11-0AB0) 416
6.10.1 Measurement types and measuring ranges 425
6.10.2 Adjustable parameters 426
6.10.3 Additional information on SM 331; AI 8 x TC 428

6.11 Analog input module SM 331, AI 6 x TC isolated (6ES7331-7PE10-0AB0) 433
6.11.1 Measurement types and measuring ranges 444
6.11.2 Programmable parameters 445
6.11.3 Additional information relating to SM 331; AI 6 x TC 446
6.11.4 Firmware update via HW Config for analog input module SM 331; AI 6 x TC 453
6.11.5 I&M data for identifying the analog input module SM 331; AI 6 x TC 455
6.11.6 Calibration of analog input module SM 331; AI 6 x TC 456

6.12 Analog output module SM 332; AO 8 x 12 bit; (6ES7332-5HF00-0AB0) 463
6.12.1 SM 332; AO 8 x 12 Bit - Output ranges 468
6.12.2 Programmable parameters 469
6.12.3 Additional information on SM 332; AO 8 x 12 Bit 470

6.13 Analog output module SM 332; AO 4 x 16 bit; isochrone; (6ES7332-7ND02-0AB0) 471
6.13.1 SM 332; AO 4 x 16 Bit - Output ranges 477
6.13.2 Programmable parameters 478
6.13.3 Isochronous mode 479
6.13.4 Additional information on SM 332; AO 4 x 16 Bit 480

6.14 Analog output module SM 332; AO 4 x 12 Bit; (6ES7332-5HD01-0AB0) 481
6.14.1 Output ranges of SM 332; AO 4 x 12 Bit 487
6.14.2 Programmable parameters 488
6.14.3 Additional information on SM 332; AO 4 x 12 Bit 489

6.15 Analog output module SM 332; AO 2 x 12 Bit; (6ES7332-5HB01-0AB0) 490
6.15.1 Output ranges of SM 332; AO 2 x 12 Bit 496
6.15.2 Programmable parameters 497
6.15.3 Additional information on SM 332; AO 2 x 12 Bit 498

6.16 Analog IO module SM 334; AI 4/AO 2 x 8/8 Bit; (6ES7334-0CE01-0AA0) 499
6.16.1 SM 334; AI 4/AO 2 x 8/8 Bit - Function principle 505
6.16.2 Measurement and output type of SM 334; AI 4/AO 2 x 8/8 bit 506
6.16.3 Measurement and output ranges of SM 334; AI 4/ AO 2 x 8/8 bit 506
6.16.4 Additional information on SM 334; AI 4/AO2 x 8/8 Bit 506

6.17 Analog IO module SM 334; AI 4/AO 2 x 12 bit; (6ES7334-0KE00-0AB0) 507
6.17.1 Programmable parameters 513
6.17.2 Measurement types and ranges 514
6.17.3 Additional information on SM 334; AI 4/ AO 2 x 12 bit 515

7 Other signal modules 517

7.1 Module overview 517

7.2 Simulator module SM 374; IN/OUT 16; (6ES7374-2XH01-0AA0) 518

7.3 Dummy module DM 370; (6ES7370-0AA01-0AA0) 521

7.4 Position decoder module SM 338; POS-INPUT; (6ES7338-4BC01-0AB0) 523
7.4.1 Isochronous mode 525
7.4.2 Wiring and block diagrams 526
7.4.3 Functions of SM 338; POS-INPUT; encoder value acquisition 527
7.4.3.1 Encoder value acquisition 527

7.4.3.2 Gray code/binary code converter ... 527
7.4.3.3 Transferred encoder value and scaling ... 528
7.4.3.4 Freeze function ... 530
7.4.4 Parametrization SM 338 POS-INPUT ... 530
7.4.5 Addressing SM 338 POS-INPUT ... 532
7.4.6 Diagnostics of SM 338; POS-INPUT ... 534
7.4.7 SM 338; POS INPUT - Interrupts ... 536
7.4.8 Technical data of SM 338; POS-INPUT ... 537

8 Interface modules ... 541

8.1 Module overview ... 541

8.2 Interface module IM 360; (6ES7360-3AA01-0AA0) ... 542

8.3 Interface module IM 361; (6ES7361-3CA01-0AA0) ... 544

8.4 Interface module IM 365; (6ES7365-0BA01-0AA0) ... 546

A Parameter sets of signal modules ... 549

A.1 Principles of programming signal modules in the user program ... 549

A.2 Parameters of digital IO modules ... 551

A.3 Parameters of the digital input module SM 321; DI 16 x DC 24/125 V ... 553

A.4 Parameters of digital output modules ... 555

A.5 Settings from the digital output module SM 322; DO 16 x DC 24 V/0.5 A (6ES7322-8BH10-0AB0) ... 557

A.6 Parameters of analog input modules ... 560

A.7 Parameters of analog input module SM 331; AI 8 x RTD ... 564

A.8 Parameters of SM 331; AI 8 TC ... 574

A.9 Parameters of analog input module SM 331; AI 8 x 13 Bit ... 582

A.10 Setting of the analog input module SM 331; AI 8 x 16 Bit (6ES7331-7NF10-0AB0) ... 585

A.11 Parameters of analog input module SM 331; AI 6 x TC isolated ... 592

A.12 Parameters of analog output modules ... 599

A.13 Parameters of analog output module SM 332; AO 8 x 12 Bit ... 602

A.14 Parameters of analog IO modules ... 605

B Diagnostics data of signal modules ... 609

B.1 Evaluating diagnostic data of signal modules in the user program ... 609

B.2 Structure and content of diagnostics data, byte 0 and up ... 610

B.3 Channel-specific diagnostics data ... 614

B.4 Diagnosis data from the SM 322; DO 16 x DC24 V/0.5 A (6ES7322-8BH10-0AB0) ... 616

B.5 Diagnostics data of SM 331; AI 6 x TC isolated ... 619

B.6 Diagnostics data of SM 338; POS-INPUT ... 622

C Dimensional drawings 625
C.1 Dimensional drawings of the mounting rails 626
C.1.1 Bus modules 632
C.2 Dimensional drawings of the power supply modules 633
C.3 Dimensional drawings of the interface modules 637
C.4 Dimensional drawings of the signal modules 639
C.5 Dimensional drawings of accessories 641
D Spare parts and accessories for S7-300 modules 643
E Directive on handling Electrostatic-Sensitive Devices (ESD) 647
E.1 Definition of ESD 647
E.2 Electrostatic charging of the body 648
E.3 Basic protective measures against electrostatic discharge 649
F Service & support 651
F.1 Service & support 651
G List of abbreviations 653
G.1 List of abbreviations 653
Glossary 655
Index 665

General technical data 1

1.1 Standards and approvals

Introduction

Contents of general technical data:

- standards and test values satisfied by modules of the S7-300 automation system
- test criteria of S7-300 modules.

Note

Information on the nameplate

You will find the current labels and approvals on the nameplate of the respective modules.

Safety guidelines

⚠ WARNING

Personal injury and damage to property may occur.

In potentially explosive environments, there is a risk of injury or damage if you disconnect any connectors while the S7-300 is in operation.

Always isolate the S7-300 operated in such areas before you disconnect and connectors.

⚠ WARNING

Explosion hazard

Components may no longer qualify for Class I, Div. 2 if they are replaced.

⚠ WARNING

This S7-300 modules are only suitable for use in Class I, Div. 2, Group A, B, C, D, or in non-hazardous areas.

Test symbols and their significance

The test symbols and their meanings are described in the following section.

CE Label

The S7-300 automation system satisfies the requirements and protection goals of the following EC directives, and conforms with the harmonized European standards (EN) for programmable logic controllers announced in the Official Journals of the European Community:

- 2006/95/EC "Electrical Equipment Designed for Use within Certain Voltage Limits" (LowVoltage Directive)
- 2004/108/EC "Electromagnetic Compatibility" (EMC Directive)
- 94/9/EC "Equipment and protective systems intended for use in potentially explosive atmospheres" (Explosion Protection Directive)

The EC declaration of conformity is held on file available to competent authorities at:

Siemens AG
Automation & Drives Group
Industry Sector I IA AS R&D DH A
P.O. Box 1963
92209 Amberg, Germany

You can also download this under the keyword "Declaration of conformity" on the Internet (http://support.automation.siemens.com/WW/view/en/37217116/134200).

UL certification

Underwriters Laboratories Inc., complyling with

- UL 508 (Industrial Control Equipment)

CSA approval

Canadian Standards Association to

- C22.2 No. 142 (Process Control Equipment)

or

cULus approval

Underwriters Laboratories Inc. complying with

- UL 508 (Industrial Control Equipment)
- CSA C22.2 No. 142 (Process Control Equipment)

or

cULus HAZ. LOC. - approval

HAZ. LOC.

Underwriters Laboratories Inc., complying with

- UL 508 (Industrial Control Equipment)
- UL 1604 (Hazardous Location)
- CSA C22.2 No. 142 (Process Control Equipment)
- CSA C22.2 No. 213 (Hazardous Location)

APPROVED for use in
Class I, Division 2, Group A, B, C, D Tx;
Class I, Zone 2, Group IIC Tx

FM approval

Factory Mutual Research (FM) in accordance with
Approval Standard Class Number 3611, 3600, 3810
APPROVED for use in

Class I, Division 2, Group A, B, C, D Tx;
Class I, Zone 2, Group IIC Tx

ATEX approval

In accordance with EN 60079-15 (Electrical Apparatus for Potentially Explosive Atmospheres; Type of Protection "n") and EN 60079-0 (Electrical apparatus for potentially explosive gas atmospheres - Part 0: General Requirements)

II 3 G Ex nA II T4..T6

Marking for Australia and New Zealand

The S7-300 automation system satisfies requirements of standards to
AS/NZS CISPR 16.

IEC 61131

The S7-300 automation system satisfies requirements and criteria to
IEC 61131-2 (Programmable Controllers, Part 2: Equipment requirements and tests).

Marine approval

Classification societies:

- ABS (American Bureau of Shipping)
- BV (Bureau Veritas)
- DNV (Det Norske Veritas)
- GL (Germanischer Lloyd)
- LRS (Lloyds Register of Shipping)
- Class NK (Nippon Kaiji Kyokai)

Use in industrial environments

SIMATIC products are designed for industrial applications.

Table 1- 1 Use in industrial environments

Field of application	Noise emission requirements	Noise immunity requirements
Industry	EN 61000-6-4: 2007	EN 61000-6-2: 2005

Use in residential areas

Note

The S7-300 is designed for use in industrial areas; using it in residential areas could disturb radio and TV reception.

To operate an S7-300 in a residential area, it's RF emission must comply with Limit Value Class B to EN 55011.

Suitable measures for achieving the required Class B radio interference level include, for example:

- S7-300 installation in grounded switch cabinets / cubicles
- Use of noise filters in the supply lines

1.2 Electromagnetic compatibility

Definition

Electromagnetic compatibility (EMC) is the ability of an electrical installation to function satisfactorily in its electromagnetic environment without interfering with that environment.

The S7-300 modules also satisfy requirements of EMC legislation for the European domestic market. Compliance of the S7-300 system with specifications and directives on electric design is prerequisite.

Pulseshaped disturbance

The table below shows the EMC compatibility of S7 modules in areas subject to pulse-shaped disturbance.

Pulse-shaped disturbance	Test voltage	corresponds with degree of severity
Electrostatic discharge to IEC 61000-4-2	Air discharge: ± 8 kV Contact discharge ± 4 kV	3 2
Burst pulses (high-speed transient disturbance) to IEC 61000-4-4.	2 kV (power supply lines) 2 kV (signal lines > 3 m) 1 kV (signal lines < 3 m)	3 3
High-energy single pulse (surge) to IEC 61000-4-5 External protective circuit required (refer to *S7-300 Automation System, Hardware and Installation,* Chapter "Lightning and overvoltage protection")		3
• asymmetric coupling	2 kV (power supply lines) DC with protective elements 2 kV (signal/ data line only > 3 m), with protective elements as required	
• symmetric coupling	1 kV (power supply lines) DC with protective elements 1 kV (signal/ data line only > 3 m), with protective elements as required	

Additional measures

When connecting an S7-300 system to the public network, always ensure compliance with Limit Value Class B to EN 55022.

Sinusoidal disturbance

The table below shows the EMC compatibility of S7-300 modules in areas subject to sinusoidal disturbance.

- HF radiation

HF radiation according to IEC 61000-4-3 Electromagnetic HF field, amplitude-modulated		corresponds to degree of severity
80 MHz to 1,000 MHz; 1.4 GHz to 2 GHz	2.0 GHz to 2.7 GHz	3, 2, 1
10 V/m	1 V/m	
80% AM (1 kHz)		

- HF coupling

HF coupling according to IEC 61000-4-6	Corresponds with degree of severity
0.15 MHz to 80 MHz	3
10 V_{rms} unmodulated	
80% AM (1 kHz)	
150 Ω source impedance	

Emission of radio interference

Electromagnetic interference to EN 55016: Limit Value Class A (measured at a distance of 10 m).

Frequency	Noise emission
30 MHz to 230 MHz	< 40 dB (µV/m)Q
230 MHz to 1000 MHz	< 47 dB (µV/m)Q

Noise emission via AC mains to EN 55016: Limit value class A, Group 1.

Frequency	Noise emission
From 0.15 to 0.5 MHz	< 79 dB (µV/m)Q < 66 dB (µV/m)M
0.5 MHz to 5 MHz	< 73 dB (µV/m)Q < 60 dB (µV/m)M
5 MHz to 30 MHz	< 73 dB (µV/m)Q < 60 dB (µV/m)M

1.3 Shipping and storage conditions for modules and backup batteries

Introduction

The shipping and storage conditions of S7-300 modules surpass requirements to IEC 61131-2. The data below apply to modules shipped or put on shelf in their original packing.

The modules are compliant with climatic conditions to IEC 60721-3-3, Class 3K7 (storage), and with IEC 60721-3-2, Class 2K4 (shipping.)

Mechanical conditions are compliant with IEC 60721-3-2, Class 2M2.

Shipping and storage conditions for modules

Type of condition	Permissible range
Free fall (in shipping package)	≤ 1 m
Temperature	- 40 °C to + 70 °C
Barometric pressure	1080 hPa to 660 hPa (corresponds with an altitude of -1000 m to 3500 m)
Relative humidity	10% to 95%, no condensation
Sinusoidal oscillation to IEC 60068-2-6	5 Hz to 9 Hz: 3.5 mm 9 Hz to 150 Hz: 9.8 m/s^2
Shock to IEC 60068-2-29	250 m/s^2, 6 ms, 1000 shocks

Shipment of backup batteries

Backup batteries should always be shipped in their original package. Note the regulations governing the transport of hazardous goods. The backup battery has a lithium content of approx. 0.25 g.

Storing backup batteries

Always store backup batteries in a cool and dry place. The batteries have a maximum shelf life of 5 years.

⚠ WARNING

Improper handling of backup batteries can result in injury and damage to property. Improperly handled backup batteries may explode or cause severe burns.

Observe the following rules when handling the backup batteries of your S7-300 automation system:

- Never charge the batteries
- Never heat the batteries
- Never throw the batteries in an open fire
- Never damage the batteries mechanically (drill, squeeze, etc.)

1.4 Mechanical and climatic environmental conditions for S7-300 operation

Operating conditions

S7-300 systems are designed for stationary use in weather-proof locations. The operating conditions surpass requirements to DIN IEC 60721-3-3.

- Class 3M3 (mechanical requirements)
- Class 3K3 (climatic requirements)

Use with additional measures

The S7-300 may not be used under the conditions outlined below without taking additional measures:

- at locations with a high degree of ionizing radiation
- in aggressive environments caused, for example, by
  - the development of dust
  - corrosive vapors or gases
  - strong electric or magnetic fields
- in installations requiring special monitoring, for example
  - elevators
  - electrical plants in potentially hazardous areas

An additional measure could be an installation of the S7-300 in a cabinet or housing.

Mechanical environmental conditions

The table below shows the mechanical environmental conditions in the form of sinusoidal oscillations.

Frequency band	Continuous	Infrequently
10 Hz ≤ f ≤ 58 Hz	0.0375 mm amplitude	0.75 mm amplitude
58 Hz ≤ f ≤ 150 Hz	0.5 g constant acceleration	1 g constant acceleration

Reducing vibrations

If your S7-300 modules are exposed to severe shock or vibration, take appropriate measures to reduce acceleration or the amplitude.

We recommend the installation of the S7-300 on damping materials (for example, rubber-bonded-to-metal mounting.)

Test of mechanical environmental conditions

The table below provides important information with respect to the type and scope of the test of ambient mechanical conditions.

Condition tested	Test Standard	Comment
Vibration	Vibration test to IEC 60068-2-6 (sinusoidal)	Type of oscillation: Frequency sweeps with a rate of change of 1 octave/minute. 5 Hz ≤ f ≤ 9 Hz, constant amplitude 3.5 mm 9 Hz ≤ f ≤ 150Hz, constant acceleration 1 g Duration of oscillation: 10 frequency sweeps per axis at each of three vertically aligned axes
Shock	Shock, tested to IEC 60068-2-27	Type of shock: half-sine Severity of shock: 15 g peak value, 11 ms duration Direction of shock: 3 shocks in each direction (+/-) at each of three vertically aligned axes

Climatic environmental conditions

The S7-300 may be operated on following environmental conditions:

Environmental conditions	Permitted range	Comments
Temperature: horizontal mounting position: vertical mounting position:	 0°C to 60°C 0°C to 40°C	-
Relative humidity	10 % to 95 %	No condensation, corresponds to relative humidity (RH) Class 2 to IEC 61131, Part 2
Barometric pressure	1080 hPa to 795 hPa	Corresponds with an altitude of -1000 m to 2000 m
Concentration of pollutants	SO_2: < 0.5 ppm; RH < 60 %, no condensation $H2_S$: < 0.1 ppm; RH < 60 %, no condensation	Test: 10 ppm; 4 days Test: 1 ppm; 4 days
	ISA-S71.04 severity level G1; G2; G3	-

1.5 Specification of dielectric tests, protection class, degree of protection, and rated voltage of S7-300

Test voltage

Proof of dielectric strength must be provided in the type test at a test voltage to IEC 61131-2:

Circuits with rated voltage V_e to other circuits or ground.	Test voltage
< 50 V	500 VDC
< 150 V	2500 VDC
< 250 V	4000 VDC

Protection class

Protection class I to IEC 60536, i.e., a protective conductor must be connected to the mounting rail!

Protection against the ingress of foreign matter and water

- Degree of protection IP 20 to IEC 60529, i.e., protection against contact with standard probes.

No protection against the ingress of water.

1.6 Rated voltages of S7-300

Rated operating voltages

The S7-300 modules operate at different rated voltages. The table shows the rated voltages and corresponding tolerances.

Rated voltages	Tolerance
24 VDC	20.4 VDC to 28.8 VDC
120 VAC	93 VAC to 132 VAC
230 VAC	187 VAC to 264 VAC

1.7 SIPLUS S7-300 Modules

Definition

SIPLUS S7-300 modules can be used under extended environmental conditions. Meaning of "extended environmental conditions":

- Extended temperature range of - 25 °C to + 60 °C/70°C
- Moisture condensation/condensation permissible
- increased mechanical stress permissible

Comparison with "standard" modules

The functional scope and technical data of SIPLUS S7-300 modules and of "standard" modules are identical, with the exception of the environmental conditions.

SIPLUS S7-300 modules have a separate order number (see the table below.)

The mechanical/climatic environmental conditions and the method of testing these have changed. The SIPLUS S7-300 modules are specified:

- For deployment in harsh environmental conditions,
- For use in hostile environments.
- For extreme temperature ranges.

For more detailed information on this, refer to section Environmental conditions for the operation of SIPLUS S7-300 modules (Page 29).

Project design in STEP 7

SIPLUS S7-300 modules are not included in the hardware catalog. Please design your plant based on the relevant "standard" modules shown in the table below.

SIPLUS S7-300 Modules

This following table contains all SIPLUS S7-300 modules available at the time of publication.

In addition, we included the order numbers of the corresponding "standard" modules to support project design. You can refer to specifications and technical data in the special "standard" module section.

You´ll find more information on SIPLUS and contact partners in the Internet (http://www.siemens.com/siplus-extreme).

Table 1- 2 Comparison of SIPLUS S7-300 modules and S7-300 "Standard" module

Module type	SIPLUS S7-300 modules for the use under extended environmental conditions	"Standard" modules
	as of order no.	
Power supply		
PS 305; 2A	6AG1305-1BA80-2AA0	6ES7305-1BA80-0AA0
PS 307; 5A	6AG1307-1EA80-2AA0	6ES7307-1EA80-0AA0
PS 307; 10A	6AG1307-1KA02-7AA0	6ES7307-1KA02-0AA0
Interface module		
IM 153-1	6AG1153-1AA03-2XB0	6ES7153-1AA03-0XB0
IM 365	6AG1365-0BA01-2AA0	6ES7365-0BA01-0AA0
Separator module	6AG1195-7KF00-2XA0	6ES7195-7KF00-0XA0
Central module		
CPU 312C	6AG1312-5BE03-2AB0	6ES7312-5BE03-0AB0
CPU 313C	6AG1313-5BF03-2AB0	6ES7313-5BF03-0AB0
CPU 314	6AG1314-1AG14-7AB0	6ES7314-1AG14-0AB0
CPU 315–2 DP	6AG1315-2AH14-7AB0	6ES7315-2AH14-0AB0
CPU 313C-2DP	6AG1313-6CF03-2AB0	6ES7313-6CF03-0AB0
CPU 314C-2 PtP	6AG1314-6BG03-7AB0	6ES7314-6BG03-0AB0
CPU 314C-2DP	6AG1314-6CG03-2AB0	6ES7314-6CG03-0AB0
CPU 315-2PN/DP	6AG1315-2EH14-7AB0	6ES7315-2EH14-0AB0
CPU 317-2PN/DP	6AG1317-2EK13-2AB0	6ES7317-2EK13-0AB0
Digital input module		
SM 321; DI 16 x DC 24V	6AG1321-1BH02-2AA0	6ES7321-1BH02-0AA0
SM 321; DI 32 x DC 24V	6AG1321-1BL00-2AA0	6ES7321-1BL00-0AA0
SM 321; DI 16 x DC 24V	6AG1321-7BH01-2AB0	6ES7321-7BH01-0AB0
SM 321; DI 8 x AC 120/230V	6AG1321-1FF10-7AA0	6ES7321-1FF10-0AA0
SM 321; DI 16 x DC 48 V-125V	6AG1321-1CH20-2AA0	6ES7321-1CH20-0AA0
SM 321; DI 8 x AC 120/220 V	6AG1321-1FF01-2AA0	6ES7321-1FF01-0AA0
SM 321; DI 4 NAMUR	6AG1321-7RD00-4AB0	6ES7321-7RD00-0AB0
SM 321; DI 16 x DC 24V	6AG1321-7TH00-4AB0	6ES7321-7TH00-0AB0

Module type	SIPLUS S7-300 modules for the use under extended environmental conditions	"Standard" modules
	as of order no.	
Digital output module		
SM 322; DO 16 x DC 24V/0.5A	6AG1322-1BH01-2AA0	6ES7322-1BH01-0AA0
SM 322; DO 8 x Rel. AC 230V/5A	6AG1322-1HF10-2AA0	6ES7322-1HF10-0AA0
SM 322, DO 8 x DC 48-125 V/1.5 A	6AG1322-1CF00-7AA0	6ES7322-1CF00-0AA0
SM 322; DO 8 x AC 120/230V/2A	6AG1322-1FF01-7AA0	6ES7322-1FF01-0AA0
SM 322; DO 8 x DC 24V/0.5A	6AG1322-8BF00-2AB0	6ES7322-8BF00-0AB0
SM 322; DO 8 x DC 24V	6AG1322-1BF01-2XB0	6ES7322-1BF01-0AA0
SM 322; DO 32 x DC 24 V/0.5 A	6AG1322-1BL00-2AA0	6ES7322-1BL00-0AA0
SM 322; DO 16 x AC 120/230V/1 A	6AG1322-1FH00-7AA0	6ES7322-1FH00-0AA0
SM 322; DO 16 RELAY	6AG1322-1HH01-2AA0	6ES7322-1HH01-0AA0
SM 322; DO 8 x AC 120/230 V, 2 A	6AG1322-5FF00-4AB0	6ES7322-5FF00-0AB0
SM 322; DO 8 RELAY	6AG1322-5HF00-4AB0	6ES7322-5HF00-0AB0
SM 322; DO 16 x DC 24V	6AG1322-8BH01-2AB0	6ES7322-8BH01-0AB0
Digital I/O module		
SM 323; DI8/DO8 x DC 24V/0.5A	6AG1323-1BH01-2AA0	6ES7323-1BH01-0AA0
Analog input module		
SM 331; AI 2 x 12Bit	6AG1331-7KB02-2AB0	6ES7331-7KB02-0AB0
SM 331; AI 8 x 13 Bit	6AG1331-1KF02-4AB0	6ES7331-1KF02-0AB0
SM 331; AI 8 x 13 Bit	6AG1331-1KF02-7AB0	6ES7331-1KF02-0AB0
SM 331; AI 8 x 12 Bit	6AG1331-7KF02-2AB0	6ES7331-7KF02-0AB0
SM 331; AI 8 x 16 Bit	6AG1331-7NF00-2AB0	6ES7331-7NF00-0AB0
SM 331; AI 8 x 16 Bit	6AG1331-7NF10-2AB0	6ES7331-7NF10-0AB0
SM 331; AI 8 x 13 Bit	6AG1331-7PF11-4AB0	6ES7331-7PF11-0AB0
SM 331; AI 4 x 0/4-20 mA	6AG1331-7RD00-2AB0	6ES7331-7RD00-0AB0
SM 331; AI 8 Thermo / AI 4 PT 100	6AG1331-7SF00-4AB0	6ES7331-7SF00-0AB0
SM 331; AI 2 HART	6AG1331-7TB00-7AB0	6ES7331-7TB00-0AB0
SM 331; AI 8 x 0 to 20mA HART	6AG1331-7TF01-4AB0	6ES7331-7TF01-0AB0
SM 331; AI 8 x 0/4 to mA HART	6AG1331-7TF01-7AB0	6ES7331-7TF01-0AB0
Analog output module		
SM 332; AO 2 x 12 bit	6AG1332-5HB01-2AB0	6ES7332-5HB01-0AB0
SM 332; AO 4 x 12 bit	6AG1332-5HD01-7AB0	6ES7332-5HD01-0AB0
SM 332; AO 8 x 12 bit	6AG1332-5HF00-2AB0	6ES7332-5HF00-0AB0
SM 332; AO 8 x 12 bit	6AG1332-5HF00-4AB0	6ES7332-5HF00-0AB0
SM 332; AO 8 x 0/4 - 20 mA HART	6AG1332-8TF01-2AB0	6ES7332-8TF01-0AB0
SM 332; AO 8 x 0/4 - 20 mA HART	6AG1332-8TF01-4AB0	6ES7332-8TF01-0AB0
SM 332; AO 4 x 16 bit	6AG1332-7ND02-4AB0	6ES7332-7ND02-0AB0
Analog IO module		
SM 334; AI 4/AO 2 x 12 Bit	6AG1334-0KE00-7AB0	6ES7334-0KE00-0AB0

1.8 Environmental conditions for the operation of SIPLUS S7-300 modules

Mechanical environmental conditions

Operating category: to IEC 721 -3-3, Class 3M4.

Test of mechanical environmental conditions

The table provides information on the type and scope of the test of mechanical environmental conditions for SIPLUS S7-300 modules.

Table 1- 3 SIPLUS S7-300 Modules: Test of mechanical environmental conditions

Condition tested	Test Standard	Remarks
Vibration	Vibration test acc. to IEC 60068-2-6 (sinusoidal)	Type of oscillation: Frequency sweep at a rate of change of 1 octave/minute. 5 Hz ≤ f ≤ 9 Hz, constant Amplitude 3.5 mm 9 Hz ≤ f ≤ 150 Hz, constant Acceleration 1 g duration of oscillation: 10 frequency sweeps at each of three vertically aligned axes
Shock	Shock, tested acc. to IEC 60068-2-27	Type of shock: Half-sine Severity of shock: 15 g peak value, 11 ms duration Direction of shock: 3 shocks each in +/– direction in each of the three vertically aligned axes

Environmental conditions

Operating category: to IEC 721 -3-3, Class 3K5.

The SIPLUS S7-300 modules may also be used under the following climatic, chemical, biological and mechanical environmental conditions:

Table 1- 4 SIPLUS S7-300 Modules: Environmental conditions

Environmental conditions	Permitted range
Temperature: Horizontal mounting position: Vertical mounting position:	 -25 °C to +60 °C/70°C 0°C to +40 °C
Relative humidity	5 ... 100%, moisture consdensation/condensation permissible
Resistance against biologically active substances	Conformity with EN 60721-3-3, Class 3B2 mildew, fungi and sponge spores (excluding fauna)
Resistance against chemically active substances	Conformity with EN 60721-3-3, Class 3C4 incl. salt mist and ISA –S71.04 severity level G1; G2; G3; GX [1)2)]
Resistance against mechanically active substances	Conformity with EN 60721-3-3, Class 3S4 incl. conductive sand, dust [2)]
Air pressure in relation to ambient temperature - air pressure - installation altitude	- 25 ... +60/70 °C at 1080 to 795 hPa ≙ -1000 to +2000 m - 25 ... +50/60°C at 795 to 658 hPa ≙ +2000 to +3500 m - 25 ... +40/50°C at 658 to 540 hPa ≙ +3500 to +5000 m
Certificate of suitability as approval for rail application	--> Partly EN 50155 T1 Cat1 Cl A/B

1) ISA –S71.04 severity level GX: Dauerbelastung/long-term load: SO2 < 4.8 ppm; H2S < 9.9 ppm; Cl < 0.2 ppm; HCl < 0.66 ppm; HF < 0.12 ppm; NH < 49 ppm; O3 < 0.1 ppm; NOX < 5.2 ppm
limit value (max. 30 min/d): SO2 < 14.8 ppm; H2S < 49.7 ppm; Cl < 1.0 ppm; HCl < 3.3 ppm; HF < 2.4 ppm; NH < 247 ppm; O3 < 1.0 ppm; NOX < 10.4 ppm

2) When operated in harmful gas environments, the supplied plug covers must remain on the non-used port.

Power supply modules

2

Introduction

Various 24-VDC power supply modules are available for your S7-300 PLC and the sensors/actuators.

Power supply modules

This chapter contains the technical data of the S7-300 power supply modules.

In addition to technical data, this chapter describes:

- The characteristics
- Wiring diagram
- Block Diagram
- Line protection
- Reaction to atypical operating conditions

2.1 Power supply module PS 307; 2 A; (6ES7307-1BA01-0AA0)

Order number

6ES7307-1BA01-0AA0

Properties

Properties of the PS 307; 2 A power supply module:

- Output current 2 A
- Output voltage 24 VDC; short circuit-proof, open circuit-proof
- Connection to singlephase AC mains
  (rated input voltage 120/230 VAC, 50/60 Hz)
- Safety isolation to EN 60 950
- May be used as load power supply

Wiring diagram of PS 307; 2 A

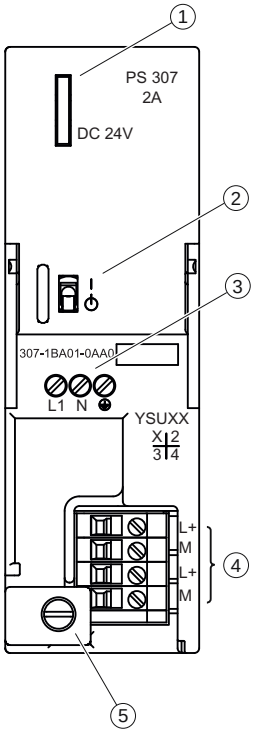

① "24 VDC output voltage present" display
② 24 VDC On/Off switch
③ Mains and protective conductor terminals
④ Terminals for 24 VDC output voltage
⑤ Strain-relief

Schematic circuit diagram of PS 307; 2 A

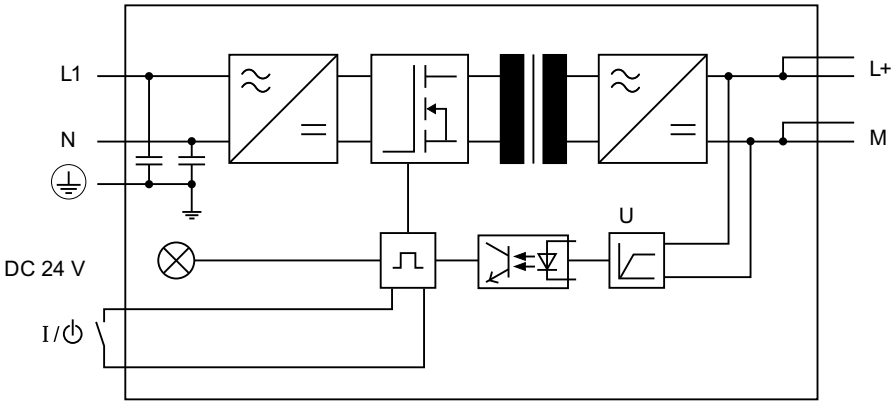

Figure 2-1 Schematic circuit diagram of power supply module PS 307; 2 A

Line protection

The mains supply of the PS 307; 2A power supply module should be protected with a miniature circuit-breaker (for example Siemens 5SN1 series) of the following rating:

- Rated current at 230 VAC: 3 A
- Tripping characteristics (type): C.

Reaction to atypical operating conditions

Table 2- 1 Reaction of the PS 307; 2A power supply module to atypical operating conditions

If ...	... then ...	24 VDC LED
the output circuit is overloaded: • I > 2.6 A (dynamic) • 2 A < I ≤ 2.6 A (static)	Voltage dip, automatic voltage recovery Voltage drop, reduction of service life	Flashing
short-circuit at the output	Output voltage 0 V; automatic voltage recovery after short-circuit is eliminated	off
overvoltage on primary side	risk of destruction	-
undervoltage on primary side	Automatic shutdown; automatic voltage recovery	off

Technical specifications of the PS 307; 2 A (6ES7307-1BA01-0AA0)

Technical specifications	
Dimensions and weight	
Dimensions W x H x D (mm)	40 x 125 x 120
Weight	ca. 400 g
Input parameters	
Input voltage • Rated value Mains frequency • Rated value • Permitted range	 120/230 VAC (automatic switching) 50 Hz or 60 Hz 47 Hz to 63 Hz
Rated input current • at 230 V • at 120 V	 0.5 A 0.9 A
Inrush current (at 25 °C)	22 A
I^2t (at inrush current)	1 A^2s
Output parameters	
Output voltage • Rated value • Permitted range • Rampup time	 24 VDC 24 V ± 3 %, open circuit-proof max. 2.5 s
Output current • Rated value	 2 A, parallel wiring supported
Short-circuit protection	electronic, non-latching 1.1 to 1.3 x I_N
Residual ripple	max. 150 mV_{pp}
Characteristics	
Safety class to IEC 536 (DIN VDE 0106, Part 1)	I, with protective conductor
Isolation rating • Rated isolation voltage (24 V to L1) • Test voltage	 AC 250 V DC 4200 V
Safety isolation	SELV circuit
Buffering of power supply failure (at 93 V or 187 V) • Repeat rate	min. 20 ms min 1 s
Efficiency	84 %
Power consumption	57 W
Power loss	Typ. 9 W
Diagnostics	
"Output voltage present" display	yes, green LED

2.2 Power supply module PS 307; 5 A; (6ES7307-1EA01-0AA0)

Order number

6ES7307-1EA01-0AA0

Properties

Properties of the PS 307; 5 A power supply module:

- Output current 5 A
- Output voltage 24 VDC; short circuit-proof, open circuit-proof
- Connection to singlephase AC mains
  (rated input voltage 120/230 VAC, 50/60 Hz)
- Safety isolation to EN 60 950
- May be used as load power supply

Wiring diagram of PS 307; 5 A

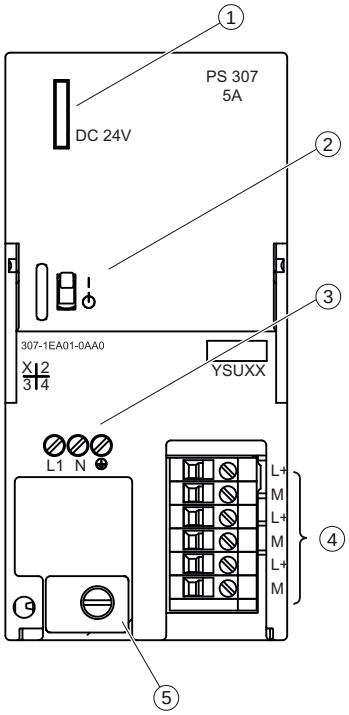

① Display for "Output voltage DC 24 V present"
② 24 VDC On/Off switch
③ Mains and protective conductor terminals
④ Terminals for 24 VDC output voltage
⑤ Strain-relief

Block diagram PS 307; 5 A

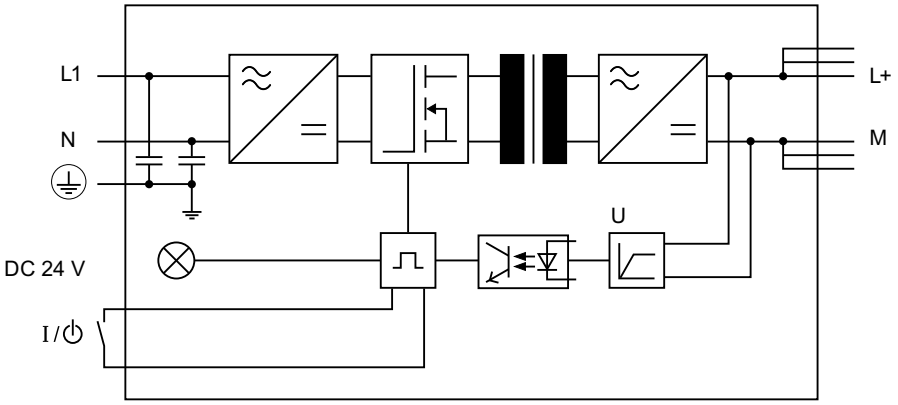

Figure 2-2 Block diagram of the PS 307; 5 A power supply module

Line protection

The mains supplies of the PS 307; 5 A power supply module should be protected with a miniature circuit-breaker (for example Siemens 5SN1 series) of the following rating:

- Rated current at 230 VAC: 6 A
- Tripping characteristics (type): C.

Reaction to atypical operating conditions

Table 2- 2 Reaction to atypical operating conditions of the PS 307; 5 A power supply module

If ...	... then ...	DisplayDC 24 V
the output circuit is overloaded: • I > 6.5 A (dynamic) • 5 A < I ≤ 6.5 A (static)	Voltage dip, automatic voltage recovery Voltage drop, reduction of service life	flashes
short-circuit at the output	Output voltage 0 V; automatic voltage recovery after short-circuit is eliminated	off
overvoltage on primary side	risk of destruction	-
undervoltage on primary side	Automatic shutdown; automatic voltage recovery	off

Technical specifications of PS 307; 5 A (6ES7307-1EA01-0AA0)

Technical specifications	
Dimensions and weight	
Dimensions W x H x D (mm)	60 x 125 x 120
Weight	ca. 600 g
Input parameters	
Input voltage • Rated value	120/230 VAC (automatic switching)
Mains frequency • Rated value • Permitted range	50 Hz or 60 Hz 47 Hz to 63 Hz
Rated input current • at 120 V • at 230 V	2.3 A 1.2 A
Inrush current (at 25 °C)	20 A
I^2t (at inrush current)	1.2 A^2s
Output parameters	
Output voltage • Rated value • Permitted range	24 VDC 24 V ± 3 %, open circuit-proof
• Rampup time	max. 2.5 s
Output current • Rated value	5 A, parallel wiring is available
Short-circuit protection	electronic, non-latching 1.1 to 1.3 x I_N
Residual ripple	max. 150 mV_{pp}
Characteristics	
Safety class to IEC 536 (DIN VDE 0106, Part 1)	I, with protective conductor
Isolation rating • Rated isolation voltage (24 V to L1)	250 VAC
• Test voltage	4200 VDC
Safety isolation	SELV circuit
Buffering of power supply failure (at 93 V or 187 V) • Repeat rate	Min. 20 ms min 1 s
Efficiency	87 %
Power consumption	138 W
Power loss	typ. 18 W
Diagnostics	
"Output voltage present" display	yes, green LED

2.3 Power supply module PS 307; 10 A; (6ES7307-1KA02-0AA0)

Order number

6ES7307-1KA02-0AA0

Properties

Properties of the PS 307; 10 A power supply module:

- Output current 10 A
- Output voltage 24 VDC; short circuit-proof, open circuit-proof
- Connection to singlephase AC mains
  (rated input voltage 120/230 VAC, 50/60 Hz)
- Safety isolation to EN 60 950
- May be used as load power supply

Block diagram of PS 307; 10 A

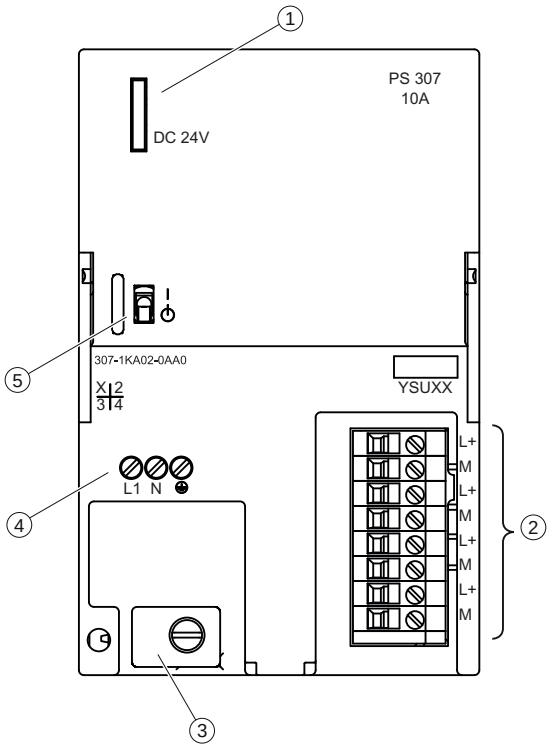

① Display for "Output voltage DC 24 V present"
② Terminals for 24 VDC output voltage
③ Strain-relief
④ Mains and protective conductor terminals
⑤ 24 VDC On/Off switch

Block diagram PS 307; 10 A

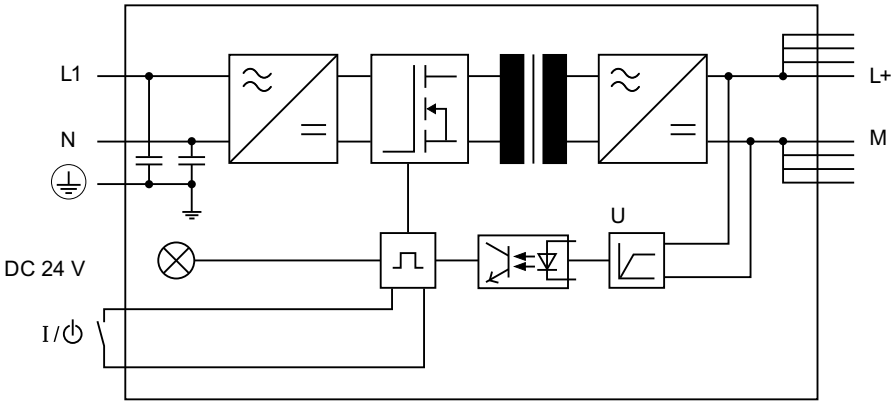

Figure 2-3 Block diagram of the PS 307; 10 A power supply module

Line protection

The mains supplies of the PS 307;10 A power supply module should be protected with a miniature circuit-breaker (for example Siemens 5SN1 series) of the following rating:

- Rated current at 230 VAC: 10 A
- Tripping characteristics (type): C.

Reaction to atypical operating conditions

Table 2- 3 Reaction to atypical operating conditions of the PS 307; 10 A power supply module

If ...	Module reaction	DisplayDC 24 V
.output circuit is overloaded: • I > 13 A (dynamic) • 10 A < I ≤ 13 A (static)	Voltage dip, automatic voltage recovery Voltage drop (reduction of service life)	flashes
short-circuit at the output	Output voltage 0 V; automatic voltage recovery after short-circuit is eliminated	off
overvoltage on primary side	risk of destruction	-
undervoltage on primary side	Automatic shutdown; automatic voltage recovery	off

Technical specifications of PS 307; 10 A (6ES7307-1KA02-0AA0)

Technical specifications	
Dimensions and weight	
Dimensions W x H x D (mm)	80 x 125 x 120
Weight	800 g
Input parameters	
Input voltage • Rated value	120/230 VAC (automatic switching)
Mains frequency • Rated value • Permitted range	50 Hz or 60 Hz 47 Hz to 63 Hz
Rated input current • at 230 V • at 120 V	1.9 A 4.2 A
Inrush current (at 25 °C)	55 A
I^2t (at inrush current)	3.3 A^2s
Output parameters	
Output voltage • Rated value • Permitted range • Rampup time	24 VDC 24 V ± 3 %, open circuit-proof max. 2.5 s
Output current • Rated value	10 A, parallel wiring is available
Short-circuit protection	electronic, non-latching 1.1 to 1.3 x I_N
Residual ripple	max. 150 mV_{pp}
Characteristics	
Safety class to IEC 536 (DIN VDE 0106, Part 1)	I, with protective conductor
Isolation rating • Rated isolation voltage (24 V to L1) • Test voltage	AC 250 V DC 4200 V
Safety isolation	SELV circuit
Buffering of power supply failure (at 93 V or 187 V) • Repeat rate	Min. 20 ms min 1 s
Efficiency	90 %
Power consumption	267 W
Power loss	typ. 27 W
Diagnostics	
"Output voltage present" display	yes, green LED

2.4 Power supply module PS 305; 2 A; (6AG1305-1BA80-2AA0)

Order number "SIPLUS S7-300 module"

6AG1305-1BA80-2AA0

Properties

Properties of the PS 305 power supply module (2 A):

- Output current 2 A
- Output voltage 24 VDC; short circuit-proof, open circuit-proof
- Connection to DC power supply
  (rated input voltage 24/48/72/96/110 VDC)
- Safety isolation to EN 60 950
- May be used as load power supply

Wiring diagram of PS 305; 2 A

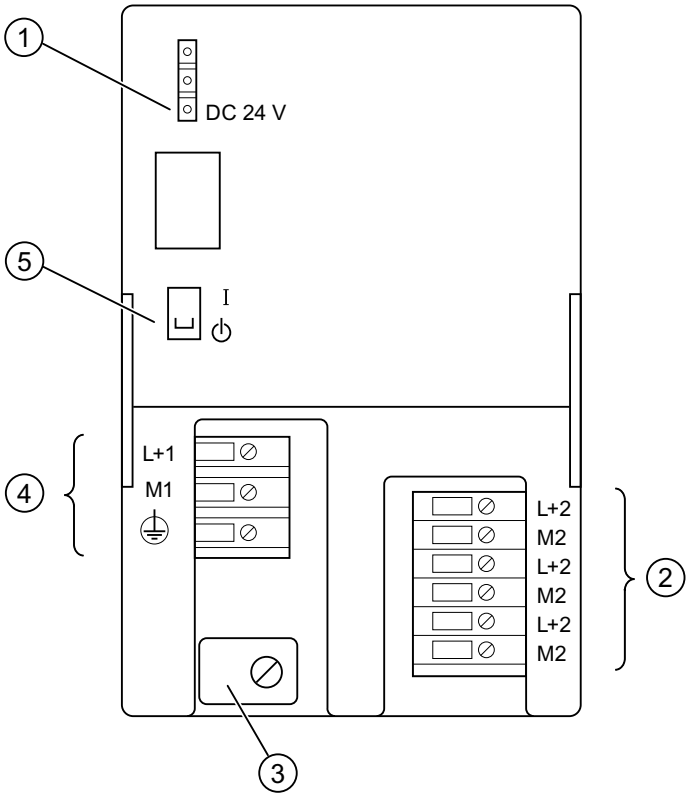

① "24 VDC output voltage present" display
② Terminals for 24 VDC output voltage
③ Strain relief
④ Mains and protective conductor terminals

⑤ 24 VDC On/Off switch

Schematic circuit diagram of PS 305; 2 A

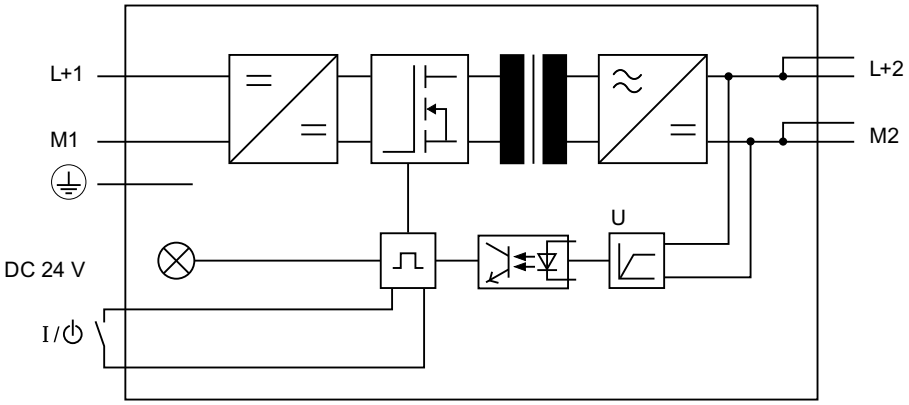

Figure 2-4 Schematic circuit diagram of power supply module PS 305; 2 A

Line protection

The mains supply of the PS 305 power supply module (2 A) should be protected with a miniature circuit-breaker (for example Siemens 5SN1 series) of the following rating:

- Rated current at 110 VDC: 10 A
- Tripping characteristics (type): C.

Reaction to atypical operating conditions

Table 2- 4 Reaction of the PS 305;(2 A) power supply module to atypical operating conditions

If ...	... then ...	24 VDC LED
... the output circuit is overloaded: • I > 3.9 A (dynamic) • 3 A < I ≤ 3.9 A (static)	Voltage dip, automatic voltage recovery Voltage drop, reduction of service life	Flashing
... short-circuit at the output	Output voltage 0 V; automatic voltage recovery after short-circuit is eliminated	off
overvoltage on primary side	risk of destruction	-
undervoltage on primary side	Automatic shutdown; automatic voltage recovery	off

Technical specifications of the PS 305; 2 A (6AG1305-1BA80-2AA0)

Technical specifications	
Dimensions and weight	
Dimensions W x H x D (mm)	80 x 125 x 120
Weight	ca. 740 g
Input parameters	
Input voltage • Rated value • Voltage range	 24/48/72/96/110 VDC 16.8 VDC to 138 VDC
Rated input current • at 24 V • at 48 V • at 72 V • at 96 V • at 110 V	 2.7 A 1.3 A 0.9 A 0.65 A 0.6 A
Inrush current (at 25 °C)	20 A
I^2t (at inrush current)	5 A^2s
Output parameters	
Output voltage • Rated value • Permitted range	 24 VDC 24 V ± 3 %, open circuit-proof
• Rampup time	max. 3 s
Output current • Rated value	2 A; [1)] parallel connection supported
Short-circuit protection	electronic, non-latching, 1.65 to 1.95 x I_N
Residual ripple	max. 150 mV_{pp}
Characteristics	
Safety class to IEC 536 (DIN VDE 0106, Part 1)	I, with protective conductor
Isolation rating • Rated isolation voltage (24 V to input)	 150 VAC
• Test voltage	2800 VDC
Safety isolation	SELV circuit
Buffering of power supply failure (at 24/48/72/96/110 V)	> 10 ms
• Repeat rate	min. 1 s
Efficiency	75 %
Power consumption	64 W
Power loss	16 W
Diagnostics	
"Output voltage present" display	yes, green LED

[1] At a limited input voltage range > 24 V (24 VDC to 138 VDC), PS 305 can be loaded to 3 A.

2.5 Power supply module PS 307; 5 A; (6AG1307-1EA80-2AA0)

Order number "SIPLUS S7 module"

6AG1307-1EA80-2AA0

Properties

Properties of the PS 307; 5 A power supply module:

- Output current 5 A
- Output voltage 24 VDC; short circuit-proof, open circuit-proof
- Connection to singlephase AC mains
  (rated input voltage 120/230 VAC, 50/60 Hz)
- Safety isolation to EN 60 950
- May be used as load power supply

Wiring diagram of PS 307; 5 A

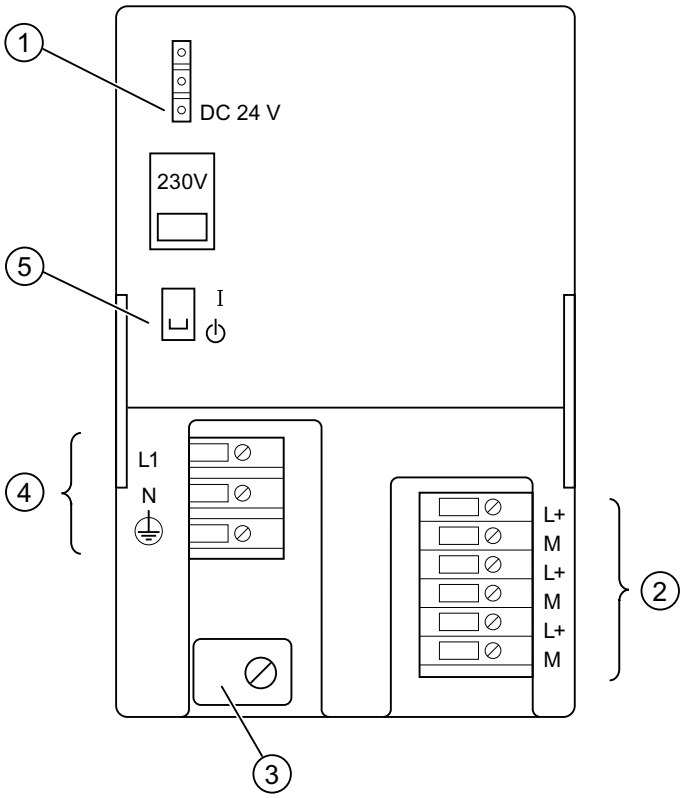

① "24 VDC output voltage present" display
② Terminals for 24 VDC output voltage
③ Strain relief
④ Mains and protective conductor terminals
⑤ 24 VDC On/Off switch
⑥ Mains selector switch

Schematic circuit diagram of PS 307; 5 A

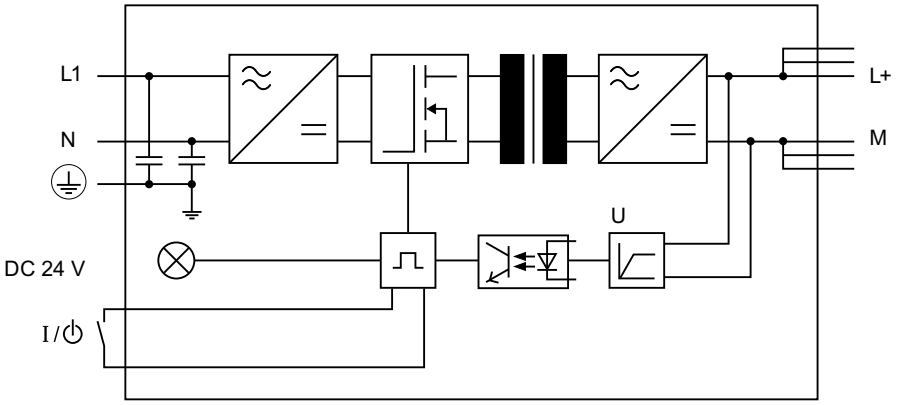

Figure 2-5 Schematic circuit diagram of power supply module PS 307; 5 A

Line protection

To protect the mains supply line of the PS 307; 5 A power supply module, you should install a miniature circuit-breaker (for example Siemens 5SN1 series) of the following rating:

- Rated current at 230 VAC: 10 A
- Tripping characteristics (type): C.

Reaction to atypical operating conditions

Table 2- 5 Reaction of the PS 307; 5A power supply module to atypical operating conditions

If ...	... then ...	24 VDC LED
the output circuit is overloaded: • I > 6.5 A (dynamic) • 5 A < I ≤ 6.5 A (static)	Voltage dip, automatic voltage recovery Voltage drop, reduction of service life	Flashing
short-circuit at the output	Output voltage 0 V; automatic voltage recovery after short-circuit is eliminated	off
overvoltage on primary side	risk of destruction	-
undervoltage on primary side	Automatic shutdown; automatic voltage recovery	off

Technical specifications of the PS 307; 5 A (6AG1307-1EA80-2AA0)

Technical specifications	
Dimensions and weight	
Dimensions W x H x D (mm)	80 x 125 x 120
Weight	ca. 570 g
Input parameters	
Input voltage • Rated value	 120/230 VDC
Mains frequency • Rated value • Permitted range	 50 Hz or 60 Hz 47 Hz to 63 Hz
Rated input current • at 120 V • at 230 V	 2.1 A 1.2 A
Inrush current (at 25 °C)	45 A
I^2t (at inrush current)	1.8 A^2s
Output parameters	
Output voltage • Rated value • Permitted range • Rampup time	 24 VDC 24 ± V 3 % max. 3 s
Output current • Rated value	 5 A; parallel wiring not supported
Short-circuit protection	electronic, non-latching 1.1 to 1.3 x I_N
Residual ripple	max. 150 mV_{pp}
Characteristics	
Safety class to IEC 536 (DIN VDE 0106, Part 1)	I, with protective conductor
Isolation rating • Rated isolation voltage (24 V to L1) • Test voltage	 AC 250 V DC 2800 V
Safety isolation	SELV circuit
Buffering of power supply failure (at 93 V or 187 V) • Repeat rate	min. 20 ms min. 1 s
Efficiency	84 %
Power consumption	143 W
Power loss	23 W
Diagnostics	
"Output voltage present" display	yes, green LED

Digital modules

3

Chapter layout

Topical structure of this chapter:

1. Chapter overview of which modules are available and described here
2. Overview of essential module properties
3. Steps in selecting and commissioning the digital module
4. General information, i.e. global data applicable to all digital modules (parameter assignment and diagnostics, for example)
5. Module-specific information (properties, connection and block diagrams, technical data and special features of the module):

   a) for digital input modules

   b) for digital output modules

   c) for relay output modules

   d) for digital IO modules

Installation and wiring

For information on installation and wiring, refer to the S7-300, CPU 31xC, and CPU 31x Operating Instructions: Installation. The operating instructions are available on the Internet (http://support.automation.siemens.com/WW/view/en/13008499).

Further information

The structure of parameter sets (data records 0, 1 and 128) is described in the system data section of the appendix. You must be familiar with this structure if you want to modify module parameters in the STEP 7 user program.

The structure of diagnostic data (data records 0 and 1) is described in the system data section of the appendix. You must be familiar with this structure if you want to analyze diagnostics data of the modules in the STEP 7 user program.

See also

Principles of programming signal modules in the user program (Page 549)

Evaluating diagnostic data of signal modules in the user program (Page 609)

3.1 Module overview

Introduction

The tables below summarize the essential properties of the digital modules. This overview supports you in selecting a module to suit your requirements.

3.1.1 Digital input modules:

Overview of properties

The table below shows essential properties of the digital input modules

Table 3- 1 Digital input modules:

Properties	Module			
	SM 321; DI 64 x 24V; Sinking/Sourcing	SM 321; DI 32 x DC24V	SM 321; DI 32 x AC120V	SM 321; DI 16 x DC24V
	(-1BP00-)	(-1BL00-)	(-1EL00-)	(-1BH02-)
Number of inputs	64 DO; isolated in groups of 16	32 DI; isolated in groups of 16	32 DI; isolated in groups of 8	16 DI; isolated in groups of 16
Rated input voltage	24 VDC	24 VDC	120 VAC	24 VDC
Suitable for...	-	2-wire, 3-wire and 4-wire proximity switches (BEROs)		
Supports isochronous mode	No	No	No	No
Programmable diagnostics	No	No	No	No
Diagnostic interrupt	No	No	No	No
Edge-triggered hardware interrupt	No	No	No	No
Adjustable input delays	No	No	No	No
Special features	-	-	-	-

Table 3- 2 Digital input modules (continued)

Properties	Module				
	SM 321; DI 16 x DC24V High Speed	SM 321; DI 16 x DC24V with process and diagnostic interrupts	SM 321; DI 16 x DC 24V/125V with process and diagnostic interrupts	SM 321; DI 16 x DC24V; source input	SM 321; DI 16 x UC24/48V
	(-1BH10-)	(-7BH01-)	(-7EH00-)	(-1BH50-)	(-1CH00-)
Number of inputs	16 DI; electrically isolated in groups of 16	16 DI; electrically isolated in groups of 16	16 DI; isolated in groups of 16	16 DI, source input, electrically isolated in groups of 16	16 DI; isolated in groups of 1
Rated input voltage	24 VDC	24 VDC	24 VDC - 125 VDC	24 VDC	24 VDC to 48 VDC 24 VAC to 48 VAC
Suitable for...	Switches; 2-wire, 3-wire and 4-wire proximity switches (BEROs)				
Supports isochronous mode	Yes	Yes	No	No	No
Programmable diagnostics	No	Yes	Yes	No	No
Diagnostic interrupt	No	Yes	Yes	No	No
Edge-triggered hardware interrupt	No	Yes	Yes	No	No
Adjustable input delays	No	Yes	Yes	No	No
Special features	Fast module; especially for isochronous mode	2 short-circuit-proof sensor supplies for 8 channels each; External redundant sensor supply is supported	---	---	---

Table 3- 3 Digital input modules (continued)

Properties	Module				
	SM 321; DI 16 x DC48-125V	SM 321; DI 16 x AC120/230 V	SM 321; DI 16 x NAMUR	SM 321; DI 8 x AC 120/230V	SM 321; DI 8 x AC 120/230V ISOL
	(-1CH20-)	(-1FH00-)	(-7TH00-) *	(-1FF01-)	(-1FF10-)
Number of inputs	16 DI; isolated in groups of 4	16 DI; isolated in groups of 4	16 DI; isolated in groups of 2	8 DI; isolated in groups of 2	8 DI; isolated in groups of 2
Rated input voltage	120/230 VAC	120/230 VAC	24 VDC	120/230 VAC	120/230 VAC
Suitable for...	Switches; 2-wire, 3-wire and 4-wire proximity switches (BEROs)	Switches; 2-wire / 3-wire AC proximity switches	NAMUR encoder	Switches; 2-wire / 3-wire AC proximity switches	
Supports isochronous mode	No	No	No	No	No
Programmable diagnostics	No	No	No	No	No
Diagnostic interrupt	No	No	Yes	No	No
Edge-triggered hardware interrupt	No	No	No	No	No
Adjustable input delays	No	No	No	No	No
Special features	---	---	Module with single channel diagnostics and extensive control functions	---	---

* This module is described in the ET 200M Signal Modules for Process Automation manual. You can find the manual on the Internet (http://support.automation.siemens.com/WW/view/en/7215812).

3.1.2 Digital output modules

Overview of properties

The table below shows the essential properties of the digital output modules

Table 3- 4 Digital output modules

Properties	Module				
	SM 322; DO 64 x DC24V/0,3A Sourcing (-1BP00-)	SM 322; DO 64 x DC 24V/0,3A Sinking (-1BP50-)	SM 322; DO 32 x DC24V/0,5A (-1BL00-)	SM 322; DO 32 x AC120/230V/1A (-1FL00-)	SM 322; DO 16 x DC24V/0,5A (-1BH01-)
Number of outputs	64 DO; isolated in groups of 16	64 DO; isolated in groups of 16	32 DO; isolated in groups of 8	32 DO; isolated in groups of 8	16 DO; isolated in groups of 8
Output current	3 A	3 A	0.5 A	1.0 A	0.5 A
Rated load voltage	24 VDC	24 VDC	24 VDC	24 VDC	24 VDC
Suitable for...	solenoid valves, DC contactors and signal lamps				
Supports isochronous mode	no	no	No	No	No
Programmable diagnostics	No	No	No	No	no
Diagnostic interrupt	No	No	No	No	No
Substitute value output	No	No	No	No	No
Special features	-				

Table 3- 5 Digital output modules (continued)

Properties	Module				
	SM 322; DO 16 x DC24V/0,5A High Speed (-1BH10-)	SM 322; DO 16 x UC24/48 V (-5GH00-)	SM 322; DO 16 x AC120/230V/1A (-1FH00-)	SM 322; DO 16 x DC24V/0,5A (-8BH00-)* (-8BH01-) * (-8BH10-)	SM 322; DO 8 x DC24V/2A (-1BF01-)
Number of outputs	16 DO; isolated in groups of 8	16 DO; isolated in groups of 1	16 DO; isolated in groups of 8	16 DO; isolated in groups of 4	8 DO; isolated in groups of 4
Output current	0.5 A	0.5 A	1 A	0.5 A	2 A
Rated load voltage	24 VDC	24 VDC to 48 VDC 24 VAC to 48 VAC	120/230 VAC	24 VDC	24 VDC
Suitable for...	solenoid valves, DC contactors and signal lamps				
Supports isochronous mode	Yes	no	no	no	no
Programmable diagnostics	No	Yes	no	yes	no
Diagnostic interrupt	no	Yes	No	Yes	No
Substitute value output				Yes	No
Special features	Fast module; especially for isochronous mode	-	-	Redundant load control is supported; extensive control functions	-

Table 3- 6 Digital output modules (continued)

Properties	Module			
	SM 322; DO 8 x DC24V/0,5A with diagnostics interrupt (-8BF00-)	SM 322; DO 8 x DC48-125V/1,5A (-1CF00-)	SM 322; DO 8 x AC120/230 V/2A (-1FF01-)	SM 322; DO 8 x AC120/230 V/ 2A ISOL (-5FF00-)
Number of outputs	8 DO; isolated in groups of 8	8 DO; electrically isolated in groups of 4, with reverse polarity protection	8 DO; isolated in groups of 4	8 DO; isolated in groups of 1
Output current	0.5 A	1.5 A	2 A	2 A
Rated load voltage	24 VDC	48 VDC to 125 VDC	120/230 VAC	120/230 VAC
Suitable for...	solenoid valves, DC contactors and signal lamps		AC solenoid valves, contactors, motor starters, FHP motors and signal lamps.	
Supports isochronous mode	No	No	No	No
Programmable diagnostics	Yes	No	no	yes
Diagnostic interrupt	Yes	No	no	yes
Substitute value output	Yes	No	no	yes
Special features	Redundant load control is supported	-	Fuse blown display. Replaceable fuse for each group	-

* This module is described in the ET 200M Signal Modules for Process Automation manual. You can find the manual on the Internet (http://support.automation.siemens.com/WW/view/en/7215812).

3.1.3 Relay output modules

Overview of properties

The table below shows the essential properties relay output modules

Table 3- 7 Relay output modules

Properties	Module			
	SM 322; DO 16 x Rel. AC 120 V (-1HH01-)	SM 322; DO 8 x Rel. AC 230 V (-1HF01-)	SM 322; DO 8 x Rel. AC 230 V/ 5 A (-5HF00-)	SM 322; DO 8 x Rel. AC 230 V/ 5 A (-1HF10-)
Number of outputs	16 outputs, electrically isolated in groups of 8	8 outputs, electrically isolated in groups of 2	8 outputs, electrically isolated in groups of 1	8 outputs, electrically isolated in groups of 1
Rated load voltage	24 VDC to 120 VDC, 48 VAC to 230 VAC	24 VDC to 120 VDC, 48 VAC to 230 VAC	24 VDC to 120 VDC, 24 VAC to 230 VAC	24 VDC to 120 VDC, 48 VAC to 230 VAC
Suitable for...	AC/DC solenoid valves, contactors, motor starters, FHP motors and signal lamps			
Supports isochronous mode	no	no	no	no
Programmable diagnostics function	no	no	yes	no
Diagnostics interrupt	no	no	yes	no
Substitution value output	no	no	yes	no
Special features	-			

3.1.4 Digital IO modules

Overview of properties

The table below shows the essential properties of digital IO modules

Table 3- 8 Digital IO modules

Properties	Module		
	SM 323; DI 16/DO 16 x DC 24 V/ 0,5 A (-1BL00-)	SM 323; DI 8/DO 8 x DC 24 V/0,5 A (-1BH01-)	SM 327; DI 8/DX 8 x DC 24 V/0,5 A, Programmable (-1BH00-)
Number of inputs	16 inputs, electrically isolated in groups of 16	8 inputs, electrically isolated in groups of 8	8 digital inputs, plus 8 separately programmable inputs/outputs, electrically isolated in groups of 16
Number of outputs	16 outputs, electrically isolated in groups of 8	8 outputs, electrically isolated in groups of 8	
Rated input voltage	24 VDC	24 VDC	24 VDC
Output current	0.5 A	0.5 A	0.5 A
Rated load voltage	24 VDC	24 VDC	24 VDC
Inputs suitable for...	Switches and 2-/3-/4-wire proximity switches (BEROs).		
Outputs suitable for...	solenoid valves, DC contactors and signal lamps		
Supports isochronous mode	no	no	no
Programmable diagnostics	no	no	no
Diagnostic interrupt	no	no	no
Edge-triggered hardware interrupt	no	no	no
Programmable input delay	no	no	no
Substitution value output	no	no	no
Special features	-		8 individually configurable input or outputs; Reading back of inputs is possible, for example, for diagnoses

3.2 Steps in selecting and commissioning the digital module

Introduction

The table below contains the steps required to successfully complete commission of digital modules.

You do not strictly have to adhere to this suggested sequence, that is, you can complete other tasks such as installing or commissioning other modules, or program the module at an earlier or later time.

Step sequence

Table 3- 9 Steps in selecting and commissioning the digital module

Step	Procedure	See...
1.	Selecting the module	Chapter Modules overview (Page 50)and the specific module chapter
2.	Installing the module in the SIMATIC S7 system	*Installation* chapter in the relevant AS Installation Manual: • S7-300 Automation System, Hardware and Installation, or S7-400 / M7-400 Automation System, Hardware and Installation or • Distributed I/O Device ET 200M
3.	Assigning module parameters	Chapter Diagnostics of digital modules (Page 60)
4.	Commission the configuration	*Commissioning* chapter in the relevant installation manual:of the AS used: • S7-300 Automation System, Hardware and Installation, or S7-400 / M7-400 Automation System, Hardware and Installation or • ET 200M distributed I/O device
5.	Analysis the configuration if commissioning was not successful.	Chapter Diagnostics of digital modules (Page 60)

See also

Programming digital modules (Page 59)

Parameters of digital output modules (Page 555)

Module overview (Page 50)

3.3 Programming digital modules

Introduction

Digital modules may have different properties. You can program the properties of certain modules.

All information in this chapter applies only to programmable digital modules:

- Digital input module SM 321; DI 16 x DC 24 V with process and diagnostic interrupts, isochronous; (6ES7321-7BH01-0AB0)
- Digital input module SM 321; DI 16 x DC 24 V/125 V with process and diagnostic interrupts (6ES7321-7EH00-0AB0)
- Digital output module SM 322; DO 16 x DC 24 V/0,5 A (6ES7322-8BH10-0AB0)
- Digital output module SM 322; DO 8 x DC 24 V/0,5 A with diagnostic interrupt (6ES7322-8BF00-0AB0)
- Digital output module SM 322; DO 8 x AC120/230 V /2A ISOL (6ES7322-5FF00-0AB0)
- Digital output module SM 322; DO 8 x Rel. AC230V /5A (6ES7322-5HF00-0AB0)
- Digital input/output module SM 327; DI 8/DO 8 x DC 24 V/0,5 A (6ES7327-1BH00-0AB0)

Programming tools

Only program the digital modules in STEP 7 while the CPU is in STOP.

After you defined all parameters, download these from your PG to the CPU. During its STOP → RUN transition, the CPU transfers the parameters to the relevant digital modules.

Static and dynamic parameters

Parameters are organized by static and dynamic properties.

Set the static parameters while the CPU is in STOP, as described earlier.

You may also edit dynamic parameters in the active user program of an S7 PLC using SFCs. However, the parameters set in STEP 7 will be applied again after a RUN → STOP, STOP → RUN transition of the CPU. The appendix Parameter sets of the signal modules (Page 549) describes the assignment of module parameters in the user program.

Parameters	programmable using	CPU operating state
static	PG (STEP 7 HW CONFIG)	STOP
dynamic	PG (STEP 7 HW CONFIG)	STOP
	SFC55 in the user program	RUN

Parameters of digital modules

Information on programmable parameters is available in the module-specific chapter.

See also

Parameters of digital IO modules (Page 551)

3.4 Diagnostics of digital modules

Introduction

The information provided in this chapter applies only to S7-300 digital modules with diagnostics functions.

- Digital input module SM 321; DI 16 x DC 24 V with process and diagnostic interrupts, isochronous; (6ES7321-7BH01-0AB0)
- Digital input module SM 321; DI 16 x DC 24 V/125 V with process and diagnostic interrupts (6ES7321-7EH00-0AB0)
- Digital output module SM 322; DO 16 × UC 24/48 V (6ES7322-5GH00-0AB0)
- Digital output module SM 322; DO 16 x DC 24 V/0,5 A (6ES7322-8BH10-0AB0)
- Digital output module SM 322; DO 8 x DC 24 V/0,5 A with diagnostic interrupt (6ES7322-8BF00-0AB0)
- Digital output module SM 322; DO 8 x AC120/230 V /2A ISOL (6ES7322-5FF00-0AB0)
- Digital output module SM 322; DO 8 x Rel. AC230V /5A (6ES7322-5HF00-0AB0)

Programmable and non-programmable diagnostics messages

We distinguish between programmable and non-programmable diagnostics messages.

You only obtain programmable diagnostics messages if you have enabled diagnostics at the relevant parameters. Program the "Diagnostics" parameter block in STEP 7.

Digital modules always return non-programmable diagnostics messages, irrespective of diagnostics being enabled.

Reactions to diagnostics message in STEP 7

Actions initiated by diagnostics messages:

- The diagnostics message will be entered in the diagnostics data of the digital module, and is then passed to the CPU.
- The SF LED on the digital module is lit.
- When "Enable Diagnostics Interrupt" is set in STEP 7, the system triggers a diagnostics interrupt and calls OB82.

Reading diagnostics messages

You can read detailed diagnostics messages using SFCs in the user program (refer to the appendix Diagnostics data of signal modules (Page 609)).

In STEP 7, you can view the cause of error by reading the module diagnostics data (refer to the STEP 7 Online Help.)

Diagnostics message using the SF LED

Digital modules with diagnostics function indicate errors at their SF LED (group error LED.) The SF LED lights up when the digital module generates a diagnostics message. It goes dark after all error states are cleared.

The SF LED also lights up to indicate external errors (short-circuit at the sensor supply), regardless of the CPU operating state (at POWER ON.)

Diagnostics messages and interrupt processing of digital modules

For information on diagnostics messages, their possible causes, troubleshooting measures, and possible interrupts refer to the specific module chapter.

3.5 How to protect digital modules from inductive overvoltage

Inductive overvoltage

Overvoltage occurs when an inductance is deactivated. Examples of this are relay coils and contactors.

Integrated overvoltage protection

The digital output modules of S7-300 have integrated overvoltage protection equipment.

Extra overvoltage protection

Inductances should only be configured with extra overvoltage protection equipment in the following instances:

- If SIMATIC output current circuits can be deactivated by extra fitted contacts (e.g. relay contacts).
- If the inductive reactances are not activated by SIMATIC modules.

Note: Ask the suppliers of inductive reactances what size of overvoltage protection equipment should be used.

Example

The following diagram shows an output current circuit which make extra overvoltage protection equipment necessary.

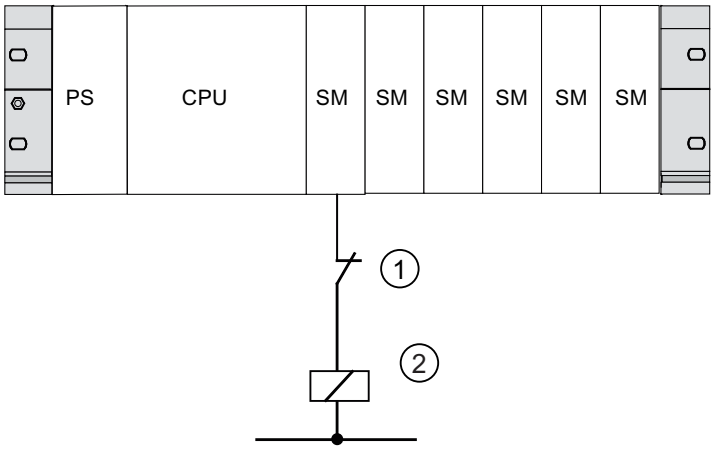

① Contact in output current circuit

② Inductive reactance needs a protective circuit

Figure 3-1 Relay contact for emergency stop in output current circuit

Configuration of coils operated with direct current

Coils operated with direct current are shown in the following diagram and configured with diodes or Z diodes.

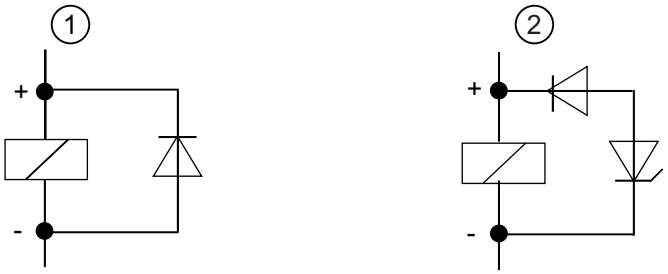

① with diode
② with Z diode

Figure 3-2 Configuration of coils operated with direct current

Properties of the diode/Z diode circuit:

- Cut-off currents can be avoided. Z diode withstands a higher cut-off voltage.
- High cut-off delay (6 to 9 times higher compared to non-protective cid´rcuits).

Faster cut-off of the Zener diode compared to the diode circuit.

Connection of AC-operated coils

The operation of AC coils with varistors or RC elements is shown in the diagram.

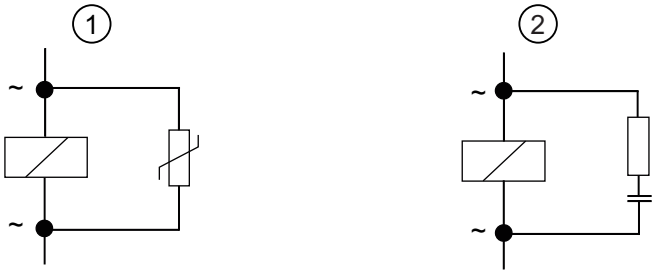

① with varistor
② with RC element

Figure 3-3 Connection of AC-operated coils

Properties of a circuit with varistor:

- The amplitude of the cut-off current is limited but not attenuated.
- The steepness of the overvoltage remains the same.
- Low cut-off delay.

Properties of acircuit with RC elements:

- Reduction of the amplitude and steepness of the cut-off current.
- Low cut-off delay.

3.6 Digital input module SM 321; DI 64 x DC 24 V, sinking/sourcing; (6ES7321-1BP00-0AA0)

Order number

6ES7321-1BP00-0AA0

Properties

Properties of SM 321; DI 64 x DC 24 V, Sinking/Sourcing:

- 64 inputs, isolated in 4 groups of 16
- Rated input voltage 24 VDC

Wiring and block diagrams of SM 321; DI 64 x DC 24 V, Sinking/Sourcing

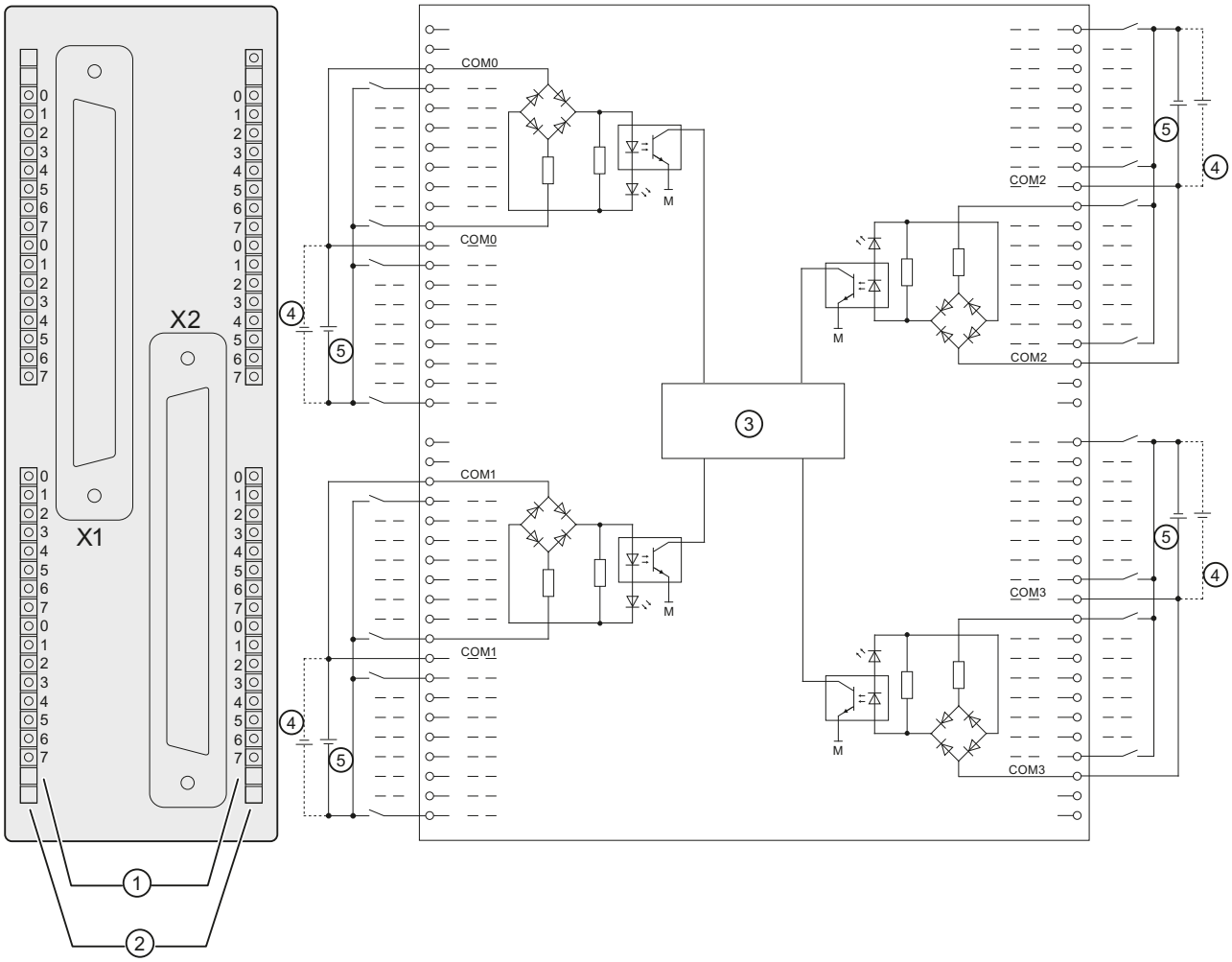

① Channel number
② Status display - green
③ Backplane bus interface
④ Terminal for "sinking" operating mode
⑤ Terminal for "sourcing" operating mode

Terminal assignment of SM 321; DI 64 x DC 24 V, Sinking/Sourcing

The figure below shows how channels are assigned to addresses (input byte x up to input byte x+7).

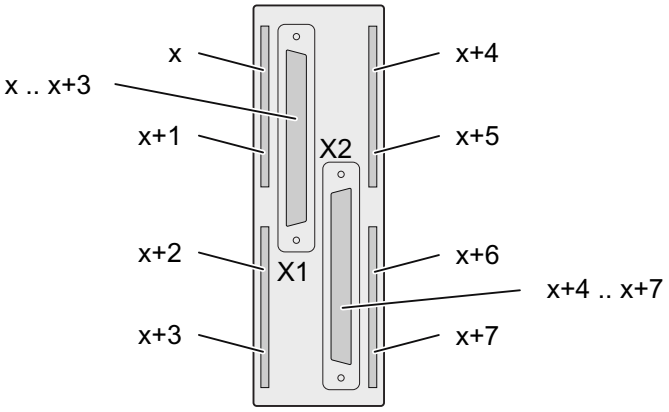

40-pin terminal block

SM321; DI 64 X DC 24 V Sinking/Sourcing features two terminal blocks for connecting actuators and sensors to the module front connector. A connecting cable is used to establish the module connections.

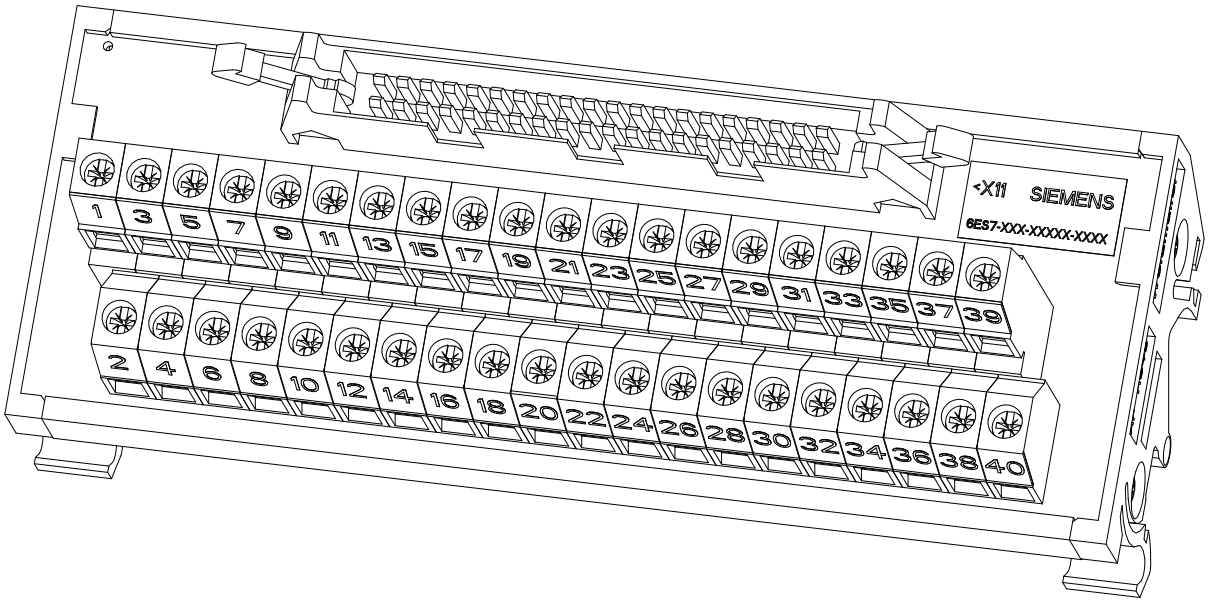

The table below shows how channel terminals are assigned to the terminal block for module SM321; DI 64 X DC 24 V Sinking/Sourcing.

Terminal	Function		Terminal	Function
1	I x.0		2	I x+2.0
3	I x.1		4	I x+2.1
5	I x.2		6	I x+2.2
7	I x.3		8	I x+2.3
9	I x.4		10	I x+2.4
11	I x.5		12	I x+2.5
13	I x.6		14	I x+2.6
15	I x.7		16	I x+2.7
17	COM 0		18	COM 1
19	I x+1.0		20	I x+3.0
21	I x+1.1		22	I x+3.1
23	I x+1.2		24	I x+3.2
25	I x+1.3		26	I x+3.3
27	I x+1.4		28	I x+3.4
29	I x+1.5		30	I x+3.5
31	I x+1.6		32	I x+3.6
33	I x+1.7		34	I x+3.7
35	COM 0		36	COM 1
37	Not connected		38	Not connected
39	Not connected		40	Not connected

Note

The COM x terminals must be connected on the terminal block.

Technical specifications of SM 321; DI 64 x DC 24 V, Sinking/Sourcing

Technical specifications	
Dimensions and weight	
Dimensions (W x H x D) (mm)	40 x 125 x 112 (including protective barrier, required for connections which are not in use)
Weight	ca. 230 g
Module-specific data	
Supports isochronous mode	No
Number of inputs	64
Cable length • Unshielded • Shielded	 max. 600 m max. 1000 m
Voltages, currents, electrical potentials	
Number of simultaneously controlled inputs • Horizontal installation to 40 °C to 60 °C • Vertical installation to 40 °C	64 32 (50% derating per group) 32 (50% derating per group)
Electrical isolation • between channels and the backplane bus • Between channels in groups of	 Yes Yes 16
Maximum potential difference • between different circuits	 75 VDC / 60 VAC
Isolation test voltage	500 VDC
Current consumption • from the backplane bus	 Max. <100 mA
Power loss of the module	Typ. 7 W
Status, interrupts, diagnostics	
Status display	Green LED (per channel)
Interrupts	none
Diagnostic functions	none
Sensor selection data	
Input voltage • Rated value • "1" signal • "0" signal	 24 VDC -13 V to -30 V, 13 V to 30 V - 5 V to + 5 V
Input current • "1" signal	 Typ. 4.2 mA

Technical specifications	
Input delay • "0" to "1" transition • "1" to "0" transition	 1.2 ms to 4.8 ms 1.2 ms to 4.8 ms
Input characteristics	to IEC 61131, type 1
Connection of 2-wire BEROs	not supported
Input type	Sinking/sourcing input
Wiring of the signal sensors	Two 40-pin terminal blocks

STEP 7 integration

64-channel I/O modules are integrated with the HSP 2019 V 1.0. The HSP forms part of STEP 7 V 5.4 SP2 and can be installed from STEP 7 V 5.4 and higher.

GSD/GSDML files

The 64-channel I/O modules are supported by the ET 200M versions listed below. Download the corresponding GSD/GSDML files from the following link: on the Internet (http://www.siemens.com/automation/service).

- To search for PROFIBUS GSD files, type in the entry ID 113498.
- To search for PROFINET GSDML files, type in the entry ID: 25057900.

PROFIBUS

- IM 153-1, as of 6ES7153-1AA03-0XB0, E12 with GSD file SI01801D.*, version V 1.5
- IM 153-2, as of 6ES7153-2BA02-0XB0, E01 with GSD file SI04801E.*, version V 1.0

PROFINET

- IM 153-4 PN, as of 6ES7153-4AA00-0XB0 with GSDML file version V 2.1

Using the module in S7-300 and ET 200M

The digital input module SM 321, DI 64 can be used with all available CPUs, provided that the station has been configured using STEP 7. Startup cannot be performed if no configuration is loaded.

The module can be used with the CPUs listed in the table below.

C-CPUs (compact CPUs)	Order number
CPU 312C	6ES7312-5BD0x-0AB0
	6ES7312-5BE03-0AB0
CPU 313C	6ES7313-5BE0x-0AB0
	6ES7313-5BF03-0AB0
CPU 313C-2 DP	6ES7313-6CE0x-0AB0
	6ES7313-6CF03-0AB0
CPU313C-2 PtP	6ES7313-6BE0x-0AB0
	6ES7313-6BF03-0AB0
CPU 314C-2 DP	6ES7314-6CF0x-0AB0
	6ES7314-6CG03-0AB0
CPU 314C-2 PtP	6ES7314-6BF0x--0AB0
	6ES7314-6BG03--0AB0

M-CPUs	Order number
CPU 312	6ES7312-1AD1x-0AB0
	6ES7312-1AE13-0AB0
CPU 314	6ES7314-1AF1x-0AB0
	6ES7314-1AG13-0AB0
CPU 315-2 DP	6ES7315-2AF0x-0AB0
	6ES7315-2AG10-0AB0
CPU 316-2 DP	6ES7316-2AG00-0AB0
CPU 317-2 DP	6ES7317-2AJ10-0AB0
CPU 315-2 PN/DP	6ES7315-2EG10-0AB0
	6ES7315-2EH13-0AB0
CPU 317-2 PN/DP	6ES7317-2EJ10-0AB0
	6ES7317-2EK13-0AB0
CPU 319-3 PN/DP	6ES7318-3EL00-0AB0

F-CPUs	Order number
CPU 315F-2 DP	6ES7315-6FF0x-0AB0
CPU 317F-2 DP	6ES7317-6FF0x-0AB0
CPU 315F-2 PN/DP	6ES7315-2FH1x-0AB0
CPU 317F-2 PN/DP	6ES7317-2FJ10-0AB0
	6ES7317-2FK13-0AB0
CPU 319F-3 PN/DP	6ES7318-3FL00-0AB0

T-CPUs	Order number
CPU 315T-2 DP	6ES7315-6TG10-0AB0
CPU 317T-2 DP	6ES7317-6TJ10-0AB0

C7-CPUs	Order number
C7-613	6ES7613-1CA01-0AE3
C7-635 Touch	6ES7635-2EB01-0AE3
C7-635 Key	6ES7635-2EC01-0AE3
C7-636 Touch	6ES7636-2EB00-0AE3
C7-636 Key	6ES7636-2EC00-0AE3

WARNING

This module must be configured in a STEP 7 project to ensure that addressing and the allocation of input/output points is performed correctly. Using the module without having first carried out this configuration work can lead to machines or processes operating in an unexpected manner.

If machines or processes do run in an unexpected manner, this can result in death, serious injury, and/or material damage.

3.7 Digital input module SM 321; DI 32 x DC 24 V; (6ES7321-1BL00-0AA0)

Order number: "Standard module"

6ES7321-1BL00-0AA0

Order number: "SIPLUS S7-300 module"

6AG1321-1BL00-2AA0

Properties

Properties of SM 321; DI 32 x DC 24 V:

- 32 inputs, isolated in groups of 16
- Rated input voltage 24 VDC
- Suitable for switches and 2-/3-/4-wire proximity switches (BEROs)

Wiring and block diagrams of SM 321; DI 32 x DC 24 V

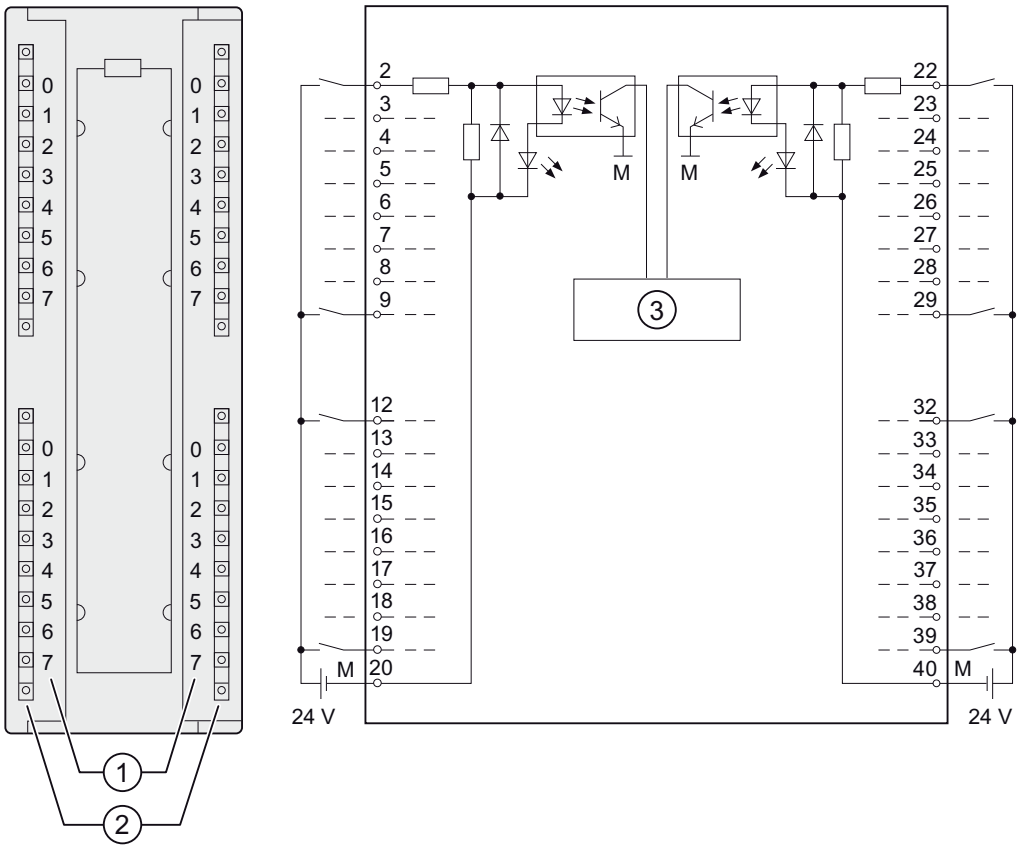

① Channel number
② Status display - green
③ Backplane bus interface

Terminal assignment of SM 321; DI 32 x DC 24 V

The figure below shows how channels are assigned to addresses (input byte x up to input byte x+3).

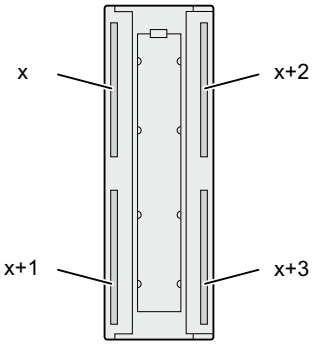

Technical specifications of SM 321; DI 32 x DC 24 V

Technical specifications	
Dimensions and weight	
Dimensions W x H x D (mm)	40 x 125 x 120
Weight	ca. 260 g
Module-specific data	
Supports isochronous mode	No
Number of inputs	32
Cable length • Unshielded • Shielded	 Max. 600 m Max. 1000 m
Front connector	40-pin
Voltages, currents, potentials	
Number of simultaneously controlled inputs • Horizontal mounting position to 40 °C to 60 °C • Vertical arrangement to 40 °C	 32 16 32
Electrical isolation • between channels and the backplane bus • Between channels – in groups of	 yes Yes 16
Maximum potential difference • Between different circuits	 75 VDC/60 VAC
Isolation test voltage	500 VDC
Current consumption • From the backplane bus	 Max. 15 mA
Power loss of the module	Typ. 6.5 W
Status, interrupts, diagnostics	
Status display	Green LED per channel
Interrupts	None
Diagnostic functions	None
Sensor selection data	
Input voltage • Rated value • "1" signal • "0" signal	 24 VDC 13 V to 30 V - 30 V to + 5 V

Technical specifications	
Input current • "1" signal	 Typ. 7 mA
Input delay • "0" to "1" transition • "1" to "0" transition	 1.2 ms to 4.8 ms 1.2 ms to 4.8 ms
Input characteristics	to IEC 61131, type 1
Connection of 2-wire BEROs • Permissible quiescent current	Supported Max. 1.5 mA
Connection of the signal transmitters	Using a 40-pin front connector

3.8 Digital output module SM 321; DI 32 x AC 120 V; (6ES7321-1EL00-0AA0)

Order number

6ES7321-1EL00-0AA0

Properties

Properties of SM 321; DI 32 x AC 120 V:

- 32 inputs, electrically isolated in groups of 8
- Rated input voltage 120 VAC
- Suitable for switches and 2-/3-wire AC proximity switches

Wiring and block diagrams SM 321; DI 32 x AC 120 V

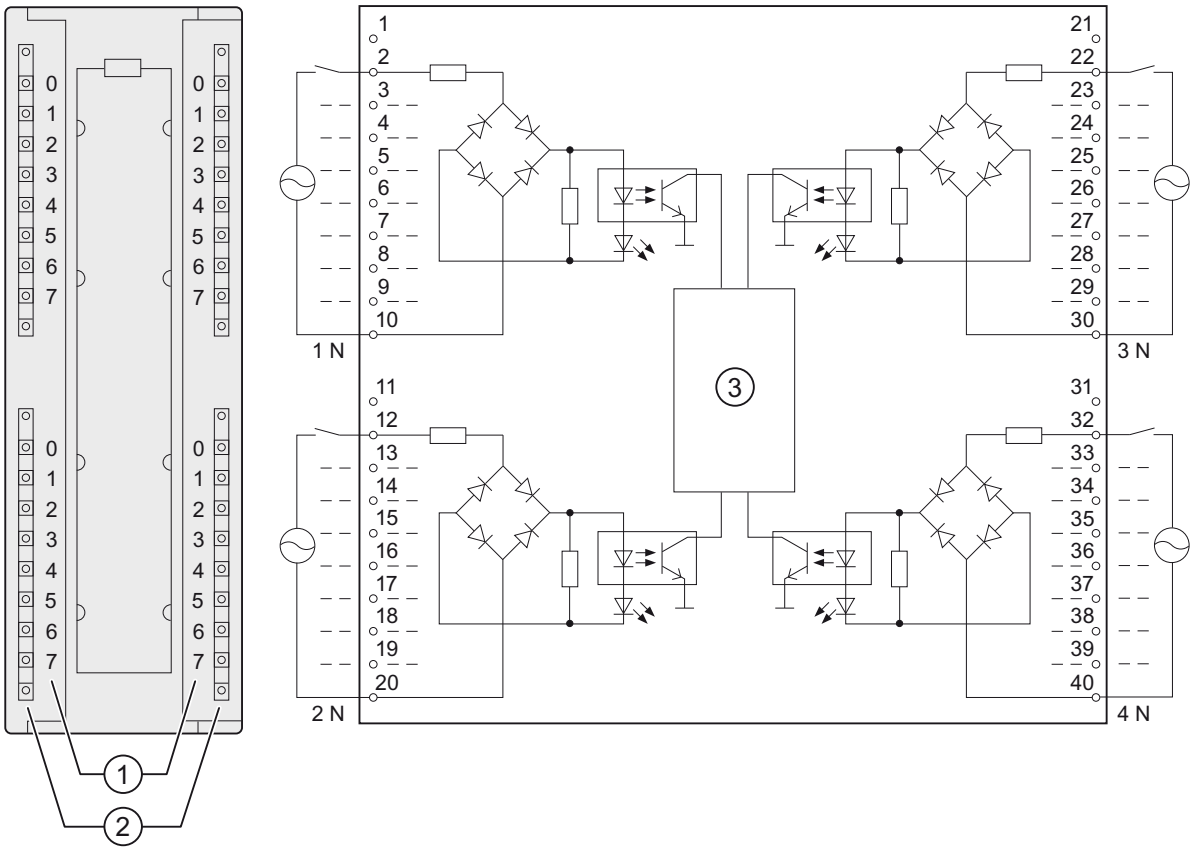

① Channel number
② Status display - green
③ Backplane bus interface

Terminal assignment

The figure below shows the channel addressing (input byte x up to input byte x +3).

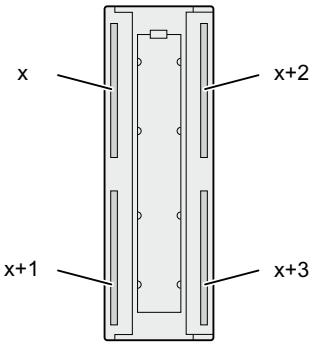

Technical specifications of SM 321; DI 32 x AC 120 V

Technical specifications	
Dimensions and weight	
Dimensions W x H x D (mm)	40 x 125 x 117
Weight	ca. 300 g
Module-specific data	
Supports isochronous mode	no
Number of inputs	32
Cable length • unshielded • shielded	 max. 600 m max. 1000 m
Voltages, currents, electrical potentials	
Number of simultaneously controlled inputs	
• horizontal mounting position to 40 °C to 60 °C	 32 24
• vertical mounting position to 40 °C	 32
Electrical isolation • between channels and the backplane bus	 yes
• between channels in groups of	yes 8
Maximum potential difference	
• between $M_{internal}$ and inputs	120 VAC
• between inputs of different groups	250 VAC
Isolation test voltage	2500 VDC

Technical specifications	
Current consumption • from the backplane bus	max. 16 mA
Power loss of the module	typ. 4 W
Status, interrupts, diagnostics	
Status display	green LED per channel
Interrupts	none
Diagnostic functions	none
Transducer selection data	
Input voltage • Rated value • "1" signal • "0" signal • Frequency band	120 VAC 74 V to 132 V 0 V to 20 V 47 Hz to 63 Hz
Input current • "1" signal	typ. 21 mA
Input delay • "0" to "1" transition • "1" to "0" transition	max. 15 ms max. 25 ms
Input characteristics	to IEC 61131, type 2
Connection of 2-wire BEROs • Permissible quiescent current	supported max. 4 mA
Wiring the signal transducers	using a 40pin front connector

3.9 Digital input module SM 321; DI 16 x DC 24 V; (6ES7321-1BH02-0AA0)

Order number: "Standard module"

6ES7321-1BH02-0AA0

Order number: "SIPLUS S7-300 module"

6AG1321-1BH02-2AA0

Properties

Properties of SM 321; DI 16 x DC 24 V:

- 16 inputs, electrically isolated in groups of 16
- Rated input voltage 24 VDC
- suitable for switches and 2- /3-/4-wire proximity switches (BEROs)

Wiring and block diagrams of SM 321; DI 16 x DC 24 V

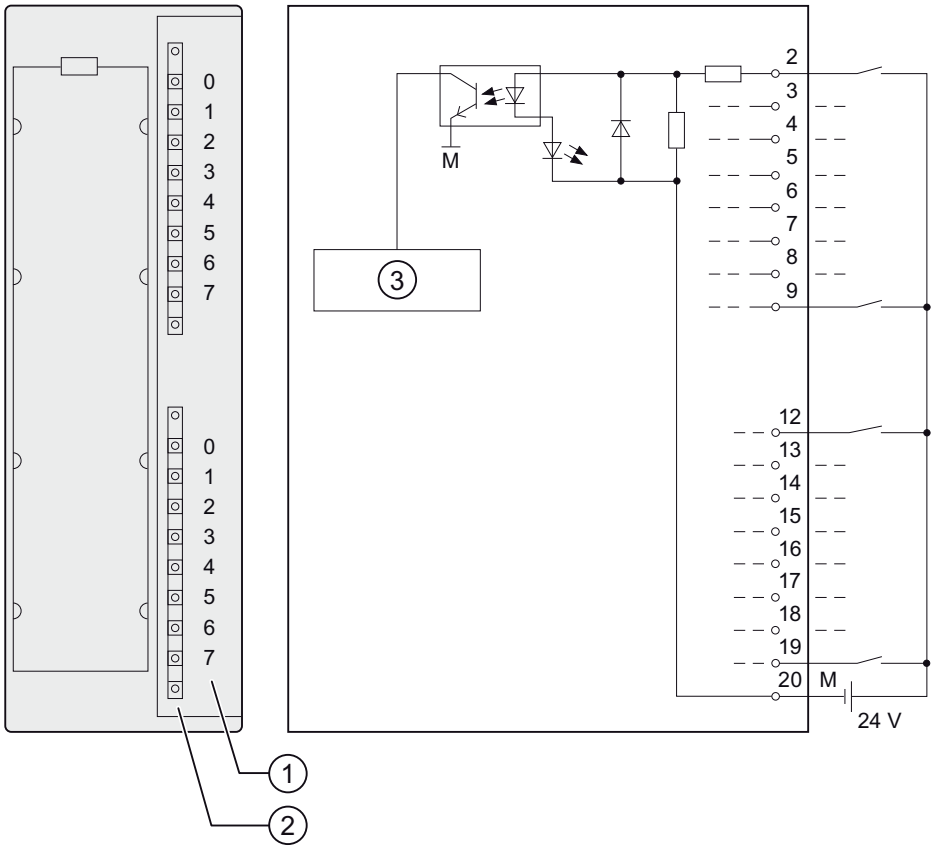

① Channel number
② Status display - green
③ Backplane bus interface

Technical specifications of SM 321; DI 16 x DC 24 V

Technical specifications	
Dimensions and weight	
Dimensions W x H x D (mm)	40 x 125 x 117
Weight	ca. 200 g
Module-specific data	
Supports isochronous mode	no
Number of inputs	16
Cable length • unshielded • shielded	 max. 600 m max. 1000 m
Voltages, currents, electrical potentials	
Number of simultaneously controlled inputs • horizontal mounting position to 60 °C • vertical mounting position to 40 °C	 16 16
Electrical isolation • between channels and the backplane bus • between channels • in groups of	 yes yes 16
Maximum potential difference • between different circuits	 75 VDC / 60 VAC
Isolation test voltage	500 VDC
Current consumption • from the backplane bus	 max. 10 mA
Power loss of the module	typ. 3.5 W
Status, interrupts, diagnostics	
Status display	green LED per channel
Interrupts	none
Diagnostic functions	none
Sensor selection data	
Input voltage • Rated value • "1" signal • "0" signal	 24 VDC 13 V to 30 V - 30 V to + 5 V
Input current • "1" signal	 typ. 7 mA

Technical specifications	
Input delay • "0" to "1" transition • "1" to "0" transition	 1.2 ms to 4.8 ms 1.2 ms to 4.8 ms
Input characteristics	to IEC 61131, type 1
Connection of 2-wire BEROs • Permissible quiescent current	supported max. 1.5 mA
Wiring the signal transducers	using a 20-pin front connector

3.10 Digital input module SM 321; DI 16 x DC 24 V High Speed; (6ES7321-1BH10-0AA0)

Order number

6ES7321-1BH10-0AA0

Properties

Properties of SM 321; DI 16 x DC 24 V High Speed:

- 16 inputs, electrically isolated in groups of 16
- Rated input voltage 24 VDC
- suitable for switches and 2- /3-/4-wire proximity switches (BEROs)
- Supports isochronous mode

Wiring and block diagrams of SM 321; DI 16 x DC 24 V High Speed

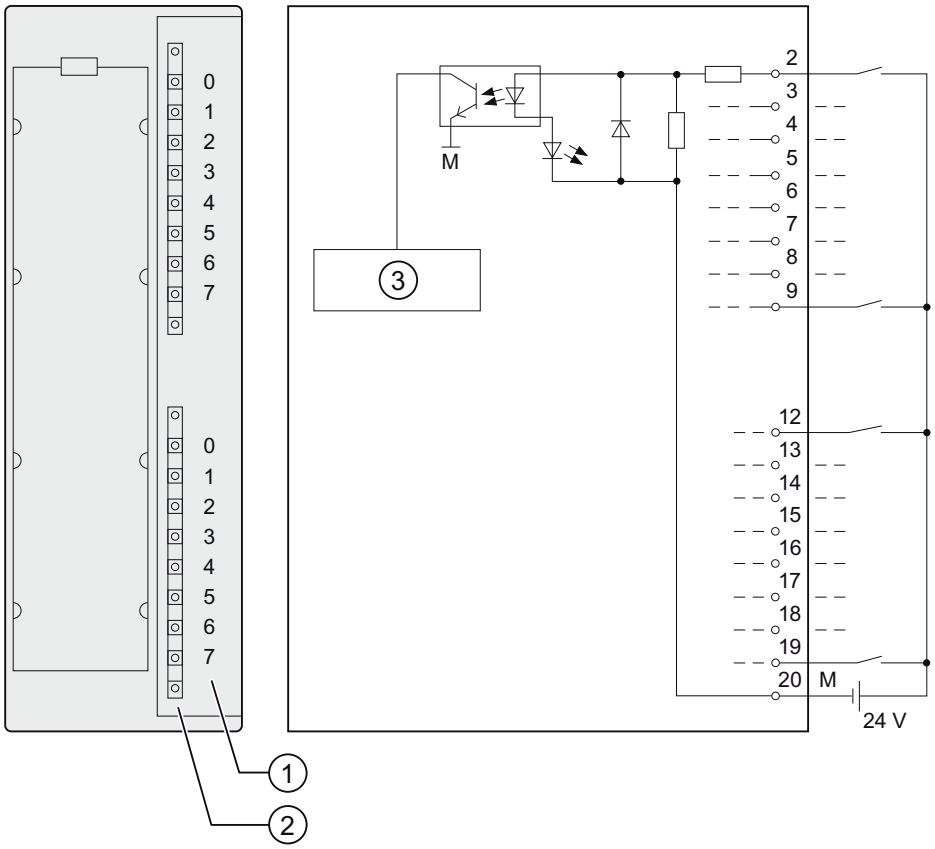

① Channel number
② Status display - green
③ Backplane bus interface

Technical specifications of SM 321; DI 16 x DC 24 V High Speed

Technical specifications	
Dimensions and weight	
Dimensions W x H x D (mm)	40 x 125 x 117
Weight	ca. 200 g
Module-specific data	
Supports isochronous mode	yes
Number of inputs	16
Cable length • unshielded • shielded	 max. 600 m max. 1000 m
Voltages, currents, electrical potentials	
Number of simultaneously controlled inputs • horizontal mounting position to 60 °C • vertical mounting position to 40 °C	 16 16
Electrical isolation • between channels and the backplane bus	 yes
Maximum potential difference • between different circuits • between channels – in groups of	 75 VDC / 60 VAC yes 16
Isolation test voltage	500 VDC
Current consumption • from the backplane bus	 max. 110 mA
Power loss of the module	typ. 3.8 W
Status, interrupts, diagnostics	
Status display	green LED per channel
Interrupts	none
Diagnostic functions	none
Sensor selection data	
Input voltage • Rated value • "1" signal • "0" signal	 24 VDC 13 V to 30 V - 30 V to + 5 V
Input current • "1" signal	 typ. 7 mA

Technical specifications	
Input delay • "0" to "1" transition • "1" to "0" transition	 25 µs to 75 µs 25 µs to 75 µs
Input characteristics	to IEC 61131, type 1
Connection of 2-wire BEROs • Permissible quiescent current	supported max. 1.5 mA
Wiring of the signal sensors	using a 20-pin front connector

3.11 Digital input module SM 321; DI 16 x 24 VDC; with hardware and diagnostic interrupts (6ES7321-7BH01-0AB0)

Order number: "Standard module"

6ES7321-7BH01-0AB0

Order number: "SIPLUS S7-300 module"

6AG1321-7BH01-2AB0

Properties

Properties of SM 321; DI 16 x DC 24 V with hardware and diagnostic interrupts:

- 16 inputs, electrically isolated in groups of 16
- Rated input voltage 24 VDC
- Input characteristics to IEC 61131, Type 2
- suitable for switches and 2- /3-/4-wire proximity switches (BEROs)
- 2 short circuitproof sensor supplies for each group of 8 channels
- external redundant sensor supply is supported
- "Sensor supply (Vs)" status display
- Group error display (SF)
- Supports isochronous mode
- Supports parameter reassignment in RUN
- Programmable diagnostics
- Programmable diagnostic interrupt
- Programmable hardware interrupts
- Programmable input delays

Wiring and block diagrams of SM 321; DI 16 x DC 24 V

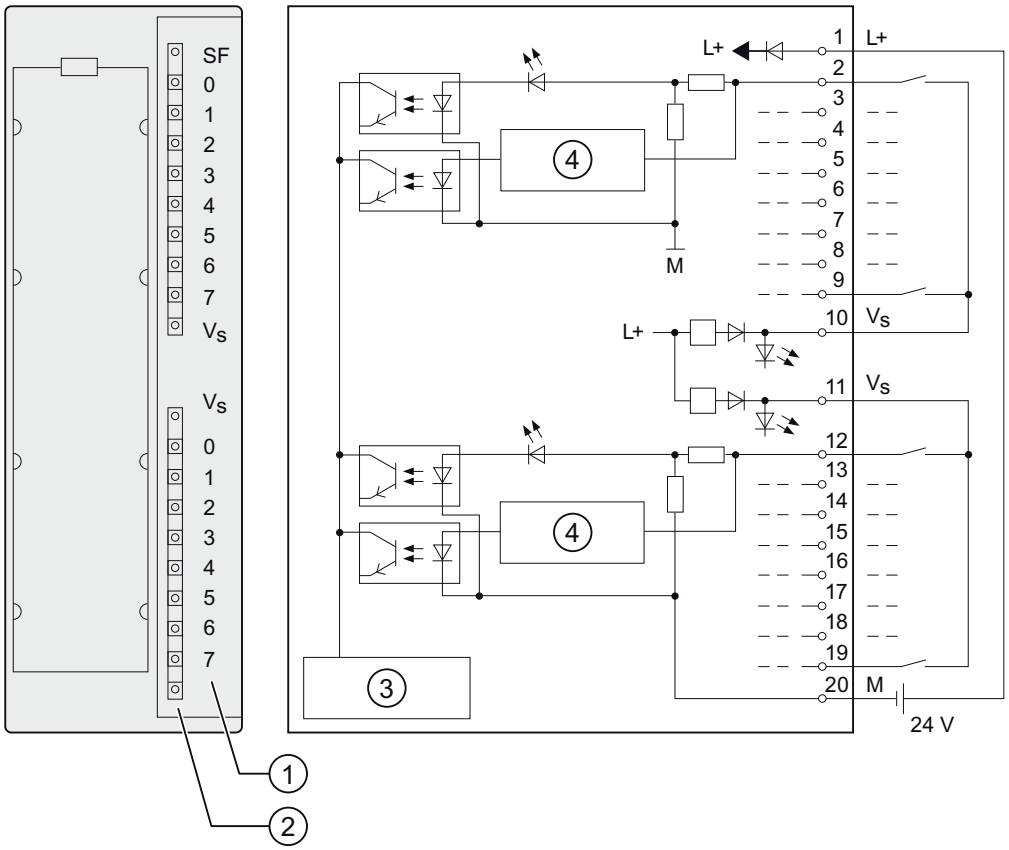

① Channel number
② Status displays - green
Error displays - red
Sensor supply V_S -green
③ Backplane bus interface
④ Wire-break detection

Wiring diagram of the redundant sensor supply

The figure below shows how an additional redundant voltage source can be used to power sensors using Vs.

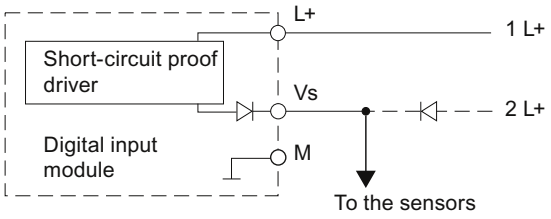

Figure 3-4 Wiring diagram of the redundant supply of sensors of SM 321; DI 16 x DC 24 V

Wiring diagram of the shunt circuit of the sensors

For wire-break detection, it is necessary to connect a shunt resistor to the transducer contacts.

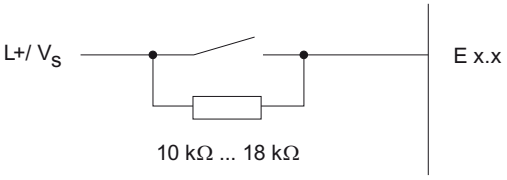

Figure 3-5 Wiring diagram of the shunt circuit of transducers of SM 321; DI 16 x DC 24 V

Technical specifications of SM 321; DI 16 x DC 24 V

Technical specifications	
Dimensions and weight	
Dimensions W x H x D (mm)	40 x 125 x 117
Weight	ca. 200 g
Module-specific data	
Supports isochronous mode	yes
Supports parameter reassignment in RUN	yes
• Response of non-programmed inputs	return the process value which was valid before configuration
Number of inputs	16
Cable length • unshielded • shielded	 max. 600 m max. 1000 m
Voltages, currents, electrical potentials	
Rated supply voltage L+ for the electronic system and sensors	24 VDC
• Reverse polarity protection	yes
Number of simultaneously controlled inputs	
• horizontal mounting position to 60 °C	16
• vertical mounting position to 40 °C	16
Electrical isolation • between channels and the backplane bus • between channels – In groups of	 yes 16
Maximum potential difference	
• between different circuits	75 VDC / 60 VAC
Isolation test voltage	500 VDC
Current consumption	
• from the backplane bus	max. 130 mA
• from load voltage L + (without sensor supply V_S)	max. 90 mA
Power loss of the module	typ. 4 W
Status, interrupts, diagnostics	
Status display • Inputs	 green LED per channel
• Sensor supplies (Vs)	green LED per output

Technical specifications	
Interrupts • Hardware interrupt • Diagnostic interrupt	 programmable programmable
Diagnostic functions	programmable
• Group error display	red LED (SF)
• Reading diagnostic information	supported
Monitoring for • wirebreak	 yes, sensing I < 1 mA
Sensor supply outputs	
Number of outputs	2
Output voltage • on load	 min. L+ (- 2.5 V)
Output current • Rated value • Permitted range	 120 mA 0 mA to 150 mA
Additional (redundant) supply	supported
Short-circuit protection	yes, electronic
Sensor selection data	
Input voltage • Rated value • "1" signal • "0" signal	 24 VDC 13 V to 30 V -30 V to + 5 V
Input current • "1" signal	 typ. 7 mA
Input characteristics	to IEC 61131, type 2
Connection of 2-wire BEROs • Permissible quiescent current	supported max. 2 mA
Wiring the signal transducers	using a 20-pin front connector
Shunt circuit of the sensor for wire-break detection	10 kohms to 18 kohms
Time/frequency	
Internal preparation time for diagnostics (in non-isochronous mode) • Enabling of process and diagnostic interrupts	 max. 40 ms
Input delay • programmable • Rated value	 yes typ. 0.1/0.5/3/15/20 ms

3.11.1 Isochronous mode

Properties

Reproducible reaction times (i.e. of the same length) are achieved in a SIMATIC system by means of a constant DP bus cycle, and synchronization of the single cyclic processes outlined below:

- Independent user program cycle. The length of the cycle time may vary due to non-cyclic program branching.
- Independent and variable DP cycle on the PROFIBUS subnet
- Cyclic operation of the backplane bus of the DP slave.
- Cyclic signal conditioning and conversion at the electronic modules of the DP slave.

The constant DP cycle runs in synchronism and at the same length. The CPU run levels (OB61 to OB64) and isochronous IO are synchronized with this cycle. I/O data are therefore transferred at defined and constant intervals (isochronous mode.)

Requirements

- The DP master and slave must support isochronous mode. STEP 7 V5.2 or higher.

Operating mode: Isochronous mode

Conditions of isochronous mode:

Filtering and processing time T_{WE} between reading actual values and writing these to the transfer buffer(the value defined for TWE applies, irrespective of the enable status of diagnostics)	255 µs to 345 µs
includes an input delay time of	100 µs
T_{DPmin}	2.5 ms
Diagnostic interrupt	max. 4 x T_{DP}

Note

In "isochronous" mode, the input delay is automatically set to 100 µs, regardless of the input delay setting in STEP 7

Further information

For further information on isochronous mode, refer to the STEP 7 Online Help, in the operating instructions ET 200M Distributed IO System (http://support.automation.siemens.com/WW/view/en/1142798) and in tthe Synchronicity (http://support.automation.siemens.com/WW/view/en/15218045) manuals.

3.11.2 SM 321; DI 16 x DC 24 V - Parameters

Programming

The general procedure of programming digital modules is described in the chapter Programming digital modules (Page 59).

Parameters of SM 321; DI 16 x DC 24 V

The table below shows an overview of configurable parameters and their default settings for SM 321; DI 16 x DC 24 V.

The default settings apply if you have not set any parameters in STEP 7.

Table 3- 10 Parameters of SM 321; DI 16 x DC 24 V

Parameters	Range of values	Default	Parameter type	Scope
Enable • Diagnostic interrupt • Hardware interrupt	 Yes/No Yes/No	 No No	dynamic	Module
Input delay/voltage type	0.1 ms (DC) 0.5 ms (DC) 3 ms (DC) 15 ms (DC) 20 ms (DC/AC)	(DC)	static	Module
Diagnosis encoder supply missing • Wire break	 Yes/No Yes/No	 No No	static	Channel group
Hardware interrupt trigger • Positive edge • Negative edge	 Yes/No Yes/No	 No No	dynamic	Channel group

Allocating the sensor supplies to channel groups

The module's two sensor supplies power the two channel groups: Inputs 0 to 7 and inputs 8 to 15. You also configure diagnostics for the sensor supply at these channel groups.

Assigning interrupt parameters to channel groups

The table below shows which channels you can group for interrupt processing.

The channel group number is required to program SFC parameters in the user program.

Table 3- 11 Assigning interrupt parameters to the inputs of SM 321; DI 16 x DC 24 V

Parameters...	Programmable in the following channel groups	Channel group number
Hardware interrupt (triggered at the positive, negative, or both edges)	0 and 1 2 and 3 4 and 5 6 and 7 8 and 9 10 and 11 12 and 13 14 and 15	0 1 2 3 4 5 6 7
Diagnostic interrupt for missing sensor supply	0 to 7 8 to 15	-
Diagnostic interrupt for wire-break	0 and 1 2 and 3	0 1

Tolerances of the programmable input delays

Table 3- 12 Tolerances of the input delays at SM 321; DI 16 x DC 24 V

Programmed input delay	Tolerance
0.1 ms	60 µs to 140 µs
0.5 ms	400 µs to 900 µs
3 ms (default)	2.6 ms to 3.3 ms
15 ms	12 ms to 15 ms
20 ms	17 ms to 23 ms

3.11.3 SM 321; DI 16 x DC 24 V - Diagnostics

Diagnostic messages of SM 321; DI 16 x DC 24 V

The table below shows an overview of the diagnostic messages of SM 321; DI 16 x DC 24 V.

Table 3- 13 Diagnostic messages of SM 321; DI 16 x DC 24 V

Diagnostic message	LED	Scope of diagnostics	programmable
Sensor supply missing	SF	Channel group	yes
Wire break	SF	Channel group	
Module not programmed	SF	Channel group	
External auxiliary voltage missing	SF	Module	no
Internal auxiliary voltage missing	SF	Module	
Fuse blown	SF	Module	
Incorrect module parameters	SF	Module	
Watchdog time-out	SF	Module	
EPROM fault	SF	Module	
RAM fault	SF	Module	
Hardware interrupt lost	SF	Module	

Note

A prerequisite for detecting faults indicated by programmable diagnostic messages is an appropriate configuration of the digital module in STEP 7.

Note

Wire break diagnostics

Wire break diagnostics is always used for one channel group with two channels. It is only possible to determine that one of the two channels has suffered a wire break; it is not possible to identify which one. When operated with PCS7, only one channel of the group can be used at any time for an exact diagnosis.

Causes of error and troubleshooting

Table 3- 14 Diagnostics Messages of the SM 321; DI 16 x DC 24 V, causes of error and troubleshooting

Diagnostic message	Possible cause of error	To correct or avoid error
Sensor supply missing	Overload at sensor supply	Eliminate overload
	Short-circuit to M at sensor supply	Eliminate the short-circuit
External auxiliary voltage missing	Power supply L+ to module missing	Feed supply L+
Internal auxiliary voltage missing	Power supply L+ to module missing	Feed supply L+
	Fuse blown in module	Replace the module
Fuse blown	Fuse blown in module	Replace the module
Incorrect module parameters	Implausible parameter or combination thereof	Program the module
Watchdog timeout	Infrequent high electromagnetic interference	Eliminate the interference
	Module defective	Replace the module
EPROM fault	Infrequent high electromagnetic interference	Eliminate interference and cycle the power supply of CPU off/on.
	Module defective	Replace the module
RAM fault	Infrequent high electromagnetic interference	Eliminate interference and cycle the power supply of CPU off/on.
	Module defective	Replace the module
Hardware interrupt lost	The module can not output an interrupt, because the previous interrupt was not acknowledged; possibly a configuration error	Change interrupt processing in the CPU, and reprogram the module as required The error persists until the module is assigned new parameters
Module not programmed	Startup error	Program the module

3.11.4 SM 321; DI 16 x DC 24 V - Behavior

Influence of the operating state and supply voltage on input values

The SM 321; DI 16 x DC 24 input values are determined by the CPU's operating state and the module's power supply.

Table 3- 15 Dependency of input values on the CPU's operating state, and on the L+ power supply of SM 321; DI 16 x DC 24 V

CPU operating state		Power supply L+ at digital module	input value of the digital module
POWER ON	RUN	L+ present	Process value
		L+ missing	0 signal
	STOP	L+ present	Process value
		L+ missing	0 signal
POWER OFF	-	L+ present	-
		L+ missing	-

Reaction to power failure

Failure of the SM 321; DI 16 x DC 24 power supply is always indicated by the module's SF LED. This information is also available on the module.

The input value is initially held for the duration of 20 ms to 40 ms before the zero signal is transferred to the CPU. Supply voltage dips <20 ms do not influence the process value (see the table above.)

Triggering of diagnostic interrupts is determined by the parameter settings (see chapter Interrupts of SM 321; DO 16 x DC 24 V (Page 96)).

Power supply failure with redundant external sensor supply

Note

When an external redundant power source is connected in parallel to the sensor supply (Vs) and the L+ power supply fails, the module does not report failure of the sensor supply, but rather the failure of the internal and/or external auxiliary voltage, and/or a blown fuse.

Short-circuit at the sensor supply Vs

The relevant Vs LED goes dark if a short-circuit is detected at the sensor supply Vs, irrespective of parameter settings.

3.11.5 SM 321; DI 16 x DC 24 V - Interrupts

Introduction

This chapter describes the interrupt reaction of SM 321; DI 16 x DC 24 V. Always distinguish between the following interrupts:

- Diagnostic interrupt
- Hardware interrupt

For detailed information on the OBs and SFCs mentioned below, refer to the STEP 7 Online Help.

Enabling interrupts

There is no default interrupt setting, i.e. interrupts are disabled if parameters are not set accordingly. You can enable interrupts in STEP 7 (see the chapter Parameters of SM 321; DI 16 x DC 24 V (Page 91)).

Diagnostic interrupt

When diagnostic interrupts are enabled, incoming error events (initial occurrence) and outgoing error events (error is cleared) are reported by means of an interrupt.

The CPU interrupts user program execution in order to process diagnostic interrupt OB82.

You can call SFC51 or 59 in OB82 in the user program to view detailed diagnostics data output by the module.

Diagnostics data remain consistent until the program exits OB82. The module acknowledges the diagnostic interrupt when the program exits OB82.

Hardware interrupt

SM 321; DI 16 x DC 24 V can trigger a hardware interrupt for each channel group at the positive, negative, or both edges of a signal transition.

Program each channel group separately. The parameters can be changed at any time (in RUN mode in the user program.)

Active hardware interrupts trigger hardware interrupt processing in the CPU (OB40) and interrupt execution of the user program or of object classes with lower priority in the CPU.

You can define the response of the AS to signal edge transitions in the user program of hardware interrupt OB40. The module acknowledges the hardware interrupt when the program exits the hardware interrupt OB.

The module can save one interrupt per channel to the stack. If no higher priority classes are pending processing, the CPU processes the buffered interrupts (of all modules) in the order of their occurrence.

Hardware interrupt lost

A "Hardware interrupt lost" diagnostic interrupt is generated if a successive interrupt is triggered at the channel previously saved to the stack and which has not yet been processed by the CPU.

The CPU does not register any further interrupts at this channel unless it has completed processing of the queued interrupts of the same channel.

Interrupt-triggering channels

The relevant hardware interrupt-triggering channel is logged in the OB40_POINT_ADDR variable of the start information of OB40. The figure shows the bit assignments of DWORD 8 in the local data.

Byte	Variable	Data type		Description
6/7	OB40_MDL_ADDR	WORD	B#16#0	Address of the interrupt-triggering module
starting at 8	OB40_POINT_ADDR	DWORD	see the figure below	Indication of the interrupt-triggering inputs

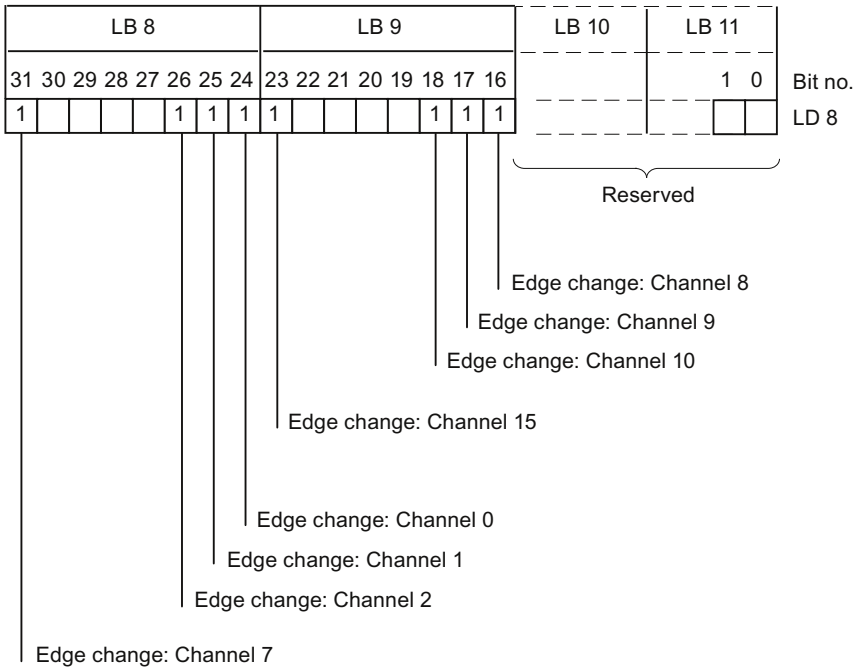

Figure 3-6 Start Information of OB40: which event has triggered the hardware interrupt

3.12 Digital input module SM 321; DI 16 x DC 24/125 V; with hardware and diagnostic interrupts (6ES7321-7EH00-0AB0)

Order number:

6ES7321-7EH00-0AB0

Properties

Properties of SM 321; DI 16 x DC 24 V/125 V; with hardware and diagnostic interrupts:

- 16 inputs, electrically isolated in groups of 16
- Rated input voltage 24 VDC to 125 VDC
- Input characteristics to IEC 61131, Type 1
- suitable for switches and 2- /3-/4-wire proximity switches (BEROs)
- Group error display (SF)
- Supports parameter reassignment in RUN
- Channel-based configurable diagnostics
- Programmable diagnostic interrupt
- Channel-based configurable hardware interrupts
- Programmable input delays

WARNING

- Electrical hazard arises with electric circuits operated with voltages
  - >30 V_{eff} and 42.4 V_{peak}
  - 60 VDC.
- It is not permitted to mix electrically safe and dangerous contact input voltages on the 16 inputs of the same module.

Wiring and block diagram of SM 321; DI 16 x DC 24 V/125 V

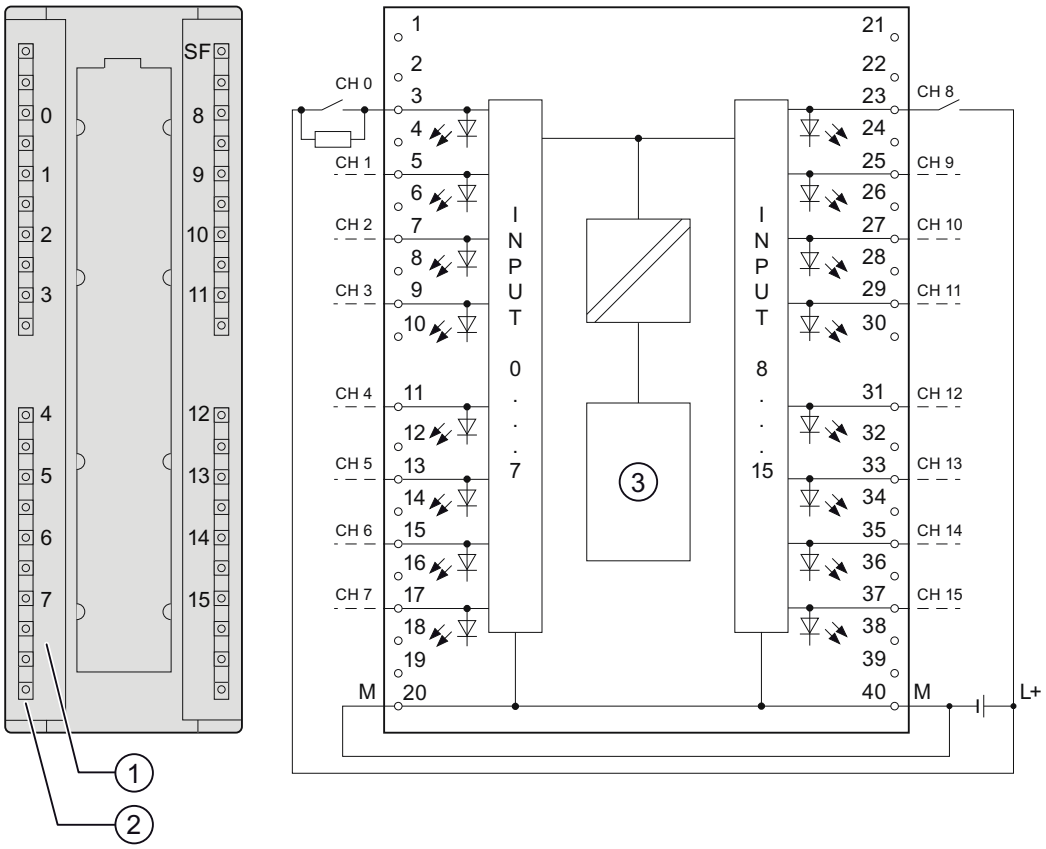

① Channel number
② Status displays - green
Error displays - red
③ Backplane bus interface

Wiring diagram of the shunt circuit of the sensors

For wire-break detection, it is necessary to connect a shunt resistor to the transducer contacts.

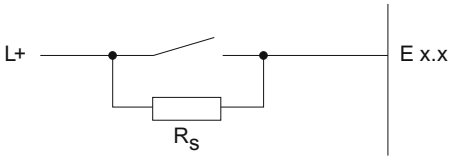

Figure 3-7 Wiring diagram of the shunt circuit of transducers of SM 321; DI 16 x DC 24 V/125 V

The resistance used depends on the module's rated input voltage

Table 3- 16 Dependence on rated input voltage and resistance

Rated input voltage L+	Resistance R_s
24 VDC	43 kΩ
48 VDC	100 kΩ
125 VDC	300 kΩ

SM 321; DI 16 x DC 24 V/125V - Technical specifications

Technical specifications	
Dimensions and weight	
Dimensions W x H x D (mm)	40 x 125 x 117
Weight	approx. 200 g
Module-specific data	
Supports isochronous mode	No
Supports parameter reassignment in RUN	Yes
• Response of non-programmed inputs	return the process value which was valid before configuration
Accuracy of the time stamp	> 5 ms*
Number of inputs	16
Cable length • unshielded • shielded	 max. 600 m max. 1000 m
Voltages, currents, electrical potentials	
Number of simultaneously controlled inputs	
• Horizontal mounting position to 60 °C – L+ = 146 VDC – L+ = 125 VDC – L+ = 100 VDC	 8 12 16
• Vertical mounting position to 40 °C – L+ = 146 VDC – L+ = 125 VDC – L+ = 100 VDC	 8 12 16
Electrical isolation • between channels and the backplane bus • between channels	 Yes No
Maximum potential difference	
• between different circuits	300 VDC / 250 VAC
Isolation test voltage	3500 VDC
Current consumption	
• from the backplane bus	max. 90 mA

Technical specifications	
Power loss of the module • L+ = 24 V • L+ = 100 V	 typ. 2 W typ. 6.5 W
Status, interrupts, diagnostics	
Status displays	green LED per channel
Interrupts • Hardware interrupt • Diagnostic interrupt • Wire break	 programmable programmable programmable
Diagnostic functions	programmable
• Group error display	red LED (SF)
• Reading diagnostics information	supported
Monitoring for • Wire break	 yes, sensing I < 1 mA
Sensor selection data	
Input voltage • Rated value • "1" signal • "0" signal	 From 15 to 146 V from -146 V to + 5 V
Input current • "1" signal	 Typ. 3.5 mA
Input characteristics	to IEC 61131, Type 1
Connection of 2-wire BEROs • Permissible quiescent current	supported max. 1 mA
Wiring of the signal sensors	using a 20-pin front connector
Time/frequency	
Input delay • programmable • Rated value	 Yes typ. 0.1/0.5/3/15/20 ms**
Fixed current limitation of the sensor for wire-break detection	See previous table for dependence on rated input voltage and resistance
Overvoltage protection	Dehnconnect RK DCO RK ME110; Art. No. 919 923

* To obtain a time stamp accuracy of < 1 ms, the input delay must be configured to 0.1 ms.

** To obtain a high immunity to interference, use a shielded cable and set input delay to 0.1 ms.

3.12.1 Parameters of SM 321; DI 16 x DC 24/125 V

Programming

The general procedure of programming digital modules is described in the chapter Programming digital modules.

Parameters of SM 321; DI 16 x DC 24 V/125 V

The table below shows an overview of configurable parameters and their default settings for SM 321; DI 16 x DC 24 V/125V.

The default settings apply if you have not set any parameters in STEP 7.

Table 3- 17 Parameters of SM 321; DI 16 x DC 24 V/125 V

Parameters	Range of values	Default	Parameter type	Efficiency range
Enable • Diagnostic interrupt • Hardware interrupt	 Yes/No Yes/No	 No No	dynamic	Module
Input delay/voltage type	0.1 ms (DC) 0.5 ms (DC) 3 ms (DC) 15 ms (DC) 20 ms (DC/AC)	3 ms (DC)	static	Module
Diagnostics • Wire break	 Yes/No	 No	static	Channel
Hardware interrupt trigger • Positive edge • Negative edge	 Yes/No Yes/No	 No No	dynamic	Channel

Tolerances of the programmable input delays

Table 3- 18 Tolerances of the input delays of SM 321; DI 16 x DC 24 V/125 V

Programmed input delay	Tolerance
0.1 ms	80 µs to 200 µs
0.5 ms	580 µs to 700 µs
3 ms (default)	3.1 ms to 3.7 ms
15 ms	15.1 ms to 18.1 ms
20 ms	20.1 ms to 24.1 ms

Note

The timers for the input delay are only valid for reading in the status. In the case of wire-break, "Wire-break diagnostics" is only triggered approx. 40 ms after the reading in of the value.

3.12.2 Diagnostics of SM 321; DI 16 x DC 24/125 V

Diagnostic messages of SM 321; DI 16 x DC 24 V/125 V

The table below shows an overview of the diagnostic messages of SM 321; DI 16 x DC 24 V/125 V.

Table 3- 19 Diagnostic messages of SM 321; DI 16 x DC 24 V/125 V

Diagnostic message	LED	Scope of diagnostics	programmable
Wire break	SF	Channel	Yes
No channel parameters	SF	Channel	
No/incorrect parameters in module	SF	Module	No
Time monitoring activated (watchdog)	SF	Module	
EPROM fault	SF	Module	
RAM fault	SF	Module	
Hardware interrupt lost	SF	Module	

Note

To detect the errors indicated by programmable diagnostic messages, you must have programmed the digital module accordingly in STEP 7.

Special features of diagnostics

The SM 321; DI 16 x DC 24 V/125 V supplies 9-byte diagnostic data (diagnostic data set 0 with a length of 4 bytes and the diagnostic data set 1 with a length of 9 bytes).

The wire-break diagnostics is only reported in the channel error vector of the data set 1 (bytes 7 and 8). Each channel that reports an error in the channel errror vector has a wire-break. You can find additional information, in chapter Structure and content of diagnostics data, byte 0 and up (Page 610).

Causes of error and troubleshooting

Table 3- 20 Diagnostics messages of SM 321; DI 16 x DC 24 V/125V, causes of error and troubleshooting

Diagnostic message	Possible cause of error	To correct or avoid error
Incorrect module parameters	Implausible parameter or combination thereof	Program the module
Time monitoring activated (watchdog)	Infrequent high electromagnetic interference	Eliminate the interference
	Module defective	Replace the module
EPROM fault	Infrequent high electromagnetic interference	Eliminate interference and cycle the power supply of CPU off/on.
	Module defective	Replace the module
RAM fault	Infrequent high electromagnetic interference	Eliminate interference and cycle the power supply of CPU off/on.
	Module defective	Replace the module
Hardware interrupt lost	The module can not output an interrupt, because the previous interrupt was not acknowledged; possibly a configuration error	Change interrupt processing in the CPU, and reprogram the module as required The error persists until the module is assigned new parameters
Module not programmed	Startup error	Program the module

3.12.3 Interrupts of SM 321; DI 16 x DC 24/125 V

Introduction

This chapter describes the interrupt reaction of SM 321; DI 16 x DC 24 V/125V. Always distinguish between the following interrupts:

- Diagnostic interrupt
- Hardware interrupt

For detailed information on the OBs and SFCs mentioned below, refer to the STEP 7 Online Help.

Enabling interrupts

There is no default interrupt setting, i.e. interrupts are disabled if parameters are not set accordingly. You can enable interrupts in STEP 7 (see the chapter Parameters of SM 321; DI 16 x DC 24 V).

Diagnostic interrupt

When diagnostic interrupts are enabled, incoming error events (initial occurrence) and outgoing error events (error is cleared) are reported by means of an interrupt.

The CPU interrupts user program execution in order to process diagnostic interrupt OB82.

You can call SFC51 or 59 in OB82 in the user program to view detailed diagnostics data output by the module.

Diagnostics data remain consistent until the program exits OB82. The module acknowledges the diagnostic interrupt when the program exits OB82.

Hardware interrupt

SM 321; DI 16 x DC 24 V/125V can trigger a hardware interrupt for each channel group at the positive, negative, or both edges of a signal transition.

You perform parameter assignment for each channel separately. The parameters can be changed at any time (in RUN mode in the user program.)

Active hardware interrupts trigger hardware interrupt processing in the CPU (OB40) and interrupt execution of the user program or of object classes with lower priority in the CPU.

You can define the response of the AS to signal edge transitions in the user program of hardware interrupt OB40. The module acknowledges the hardware interrupt when the program exits the hardware interrupt OB.

The module can save one interrupt per channel to the stack. If no higher priority classes are pending processing, the CPU processes the buffered interrupts (of all modules) in the order of their occurrence.

Hardware interrupt lost

A "Hardware interrupt lost" diagnostic interrupt is generated if a successive interrupt is triggered at the channel previously saved to the stack and which has not yet been processed by the CPU.

The CPU does not register any further interrupts at this channel unless it has completed processing of the queued interrupts of the same channel.

Interrupt-triggering channels

The relevant hardware interrupt-triggering channel is logged in the OB40_POINT_ADDR variable of the start information of OB40. The figure shows the bit assignments of DWORD 8 in the local data.

Byte	Variable	Data type		Description
6/7	OB40_MDL_ADDR	WORD	B#16#0	Address of the interrupt-triggering module
starting at 8	OB40_POINT_ADDR	DWORD	see the figure below	Indication of the interrupt-triggering inputs

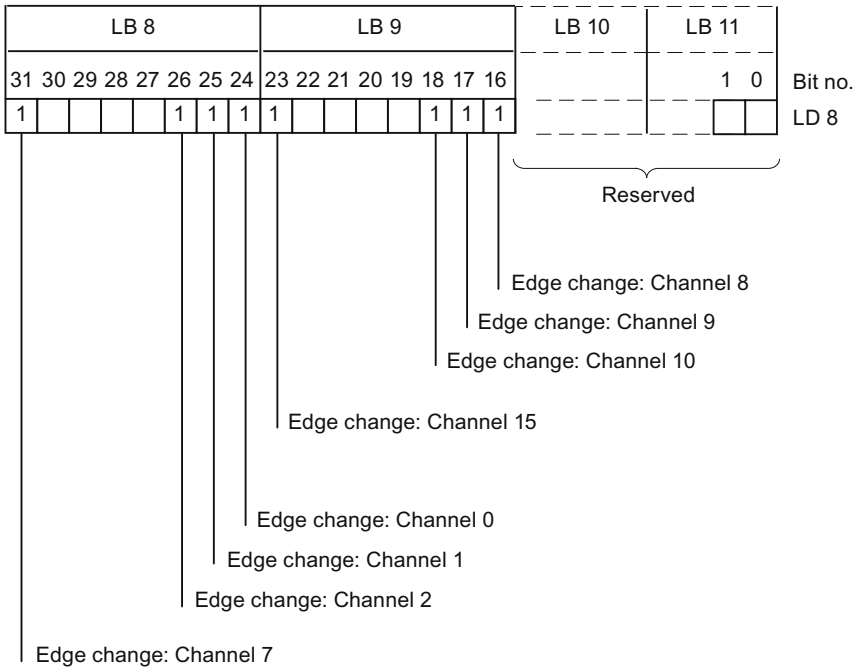

Figure 3-8 Start Information of OB40: which event has triggered the hardware interrupt

3.13 Digital input module SM 321; DI 16 x DC 24 V; source input; (6ES7321-1BH50-0AA0)

Order number

6ES7321-1BH50-0AA0

Properties

Properties of SM 321; DI 16 x DC 24 V; source input:

- 16 inputs, source input, electrically isolated in groups of 16
- Rated input voltage 24 VDC
- Suitable for switches and 2- /3-/4-wire proximity switches (BEROs)

Wiring and block diagram of SM 321; DI 16 x DC 24 V

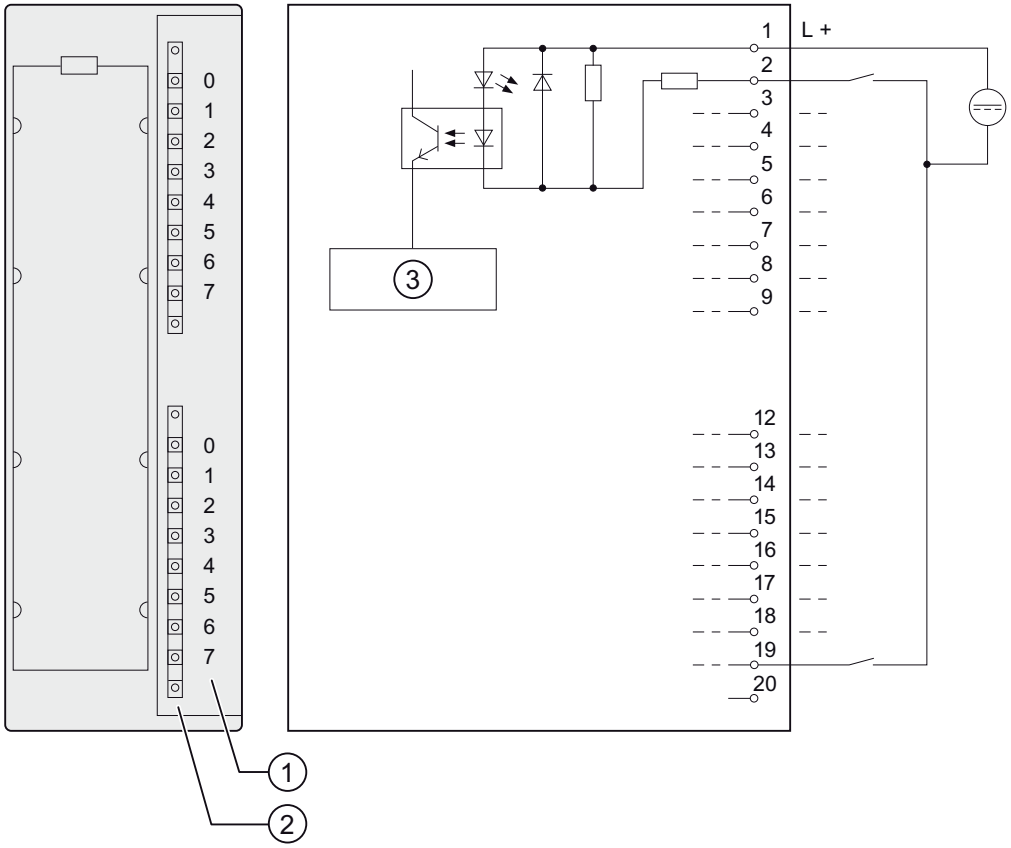

① Channel number
② Status display - green
③ Backplane bus interface

SM 321; DI 16 x DC 24 V - Technical specifications

Technical specifications	
Dimensions and weight	
Dimensions W x H x D (mm)	40 x 125 x 117
Weight	ca. 200 g
Module-specific data	
Supports isochronous mode	no
Number of inputs	16
Cable length • unshielded • shielded	 max. 600 m max. 1000 m
Voltages, currents, electrical potentials	
Number of simultaneously controlled inputs	
• horizontal mounting position to 60 °C	16
• vertical mounting position to 40 °C	16
Electrical isolation • between channels and the backplane bus	 yes
• between channels in groups of	yes 16
Maximum potential difference • between different circuits	 75 VDC / 60 VAC
Isolation test voltage	500 VDC
Current consumption • from the backplane bus	 max. 10 mA
Power loss of the module	typ. 3.5 W
Status, interrupts, diagnostics	
Status display	green LED per channel
Interrupts	none
Diagnostic functions	none
Sensor selection data	
Input voltage (reference potential L+)	
• Rated value • "1" signal • "0" signal	24 VDC -13 V to -30 V +30 V to -5 V
Input current • "1" signal	 typ. 7 mA

Technical specifications	
Input delay • "0" to "1" transition • "1" to "0" transition	 1.2 ms to 4.8 ms 1.2 ms to 4.8 ms
Input characteristics	to IEC 61131, type 1
Connection of 2-wire BEROs • Permissible quiescent current	supported max. 1.5 mA
Wiring of the signal sensors	using a 20-pin front connector

3.14 Digital input module SM 321; DI 16 x UC 24/48 V; (6ES7321-1CH00-0AA0)

Order number

6ES7321-1CH00-0AA0

Properties

Properties of SM 321; DI 16 x UC24/48 V:

- 16 inputs, electrically isolated
- Electrical isolation between channels of 120 V AC
- Rated input voltage 24 VDC/VAC to 48 VDC/VAC
- Inputs are autarkic and can be wired to suit any configuration

Wiring and block diagram of SM 321; DI 16 x UC 24/48 V

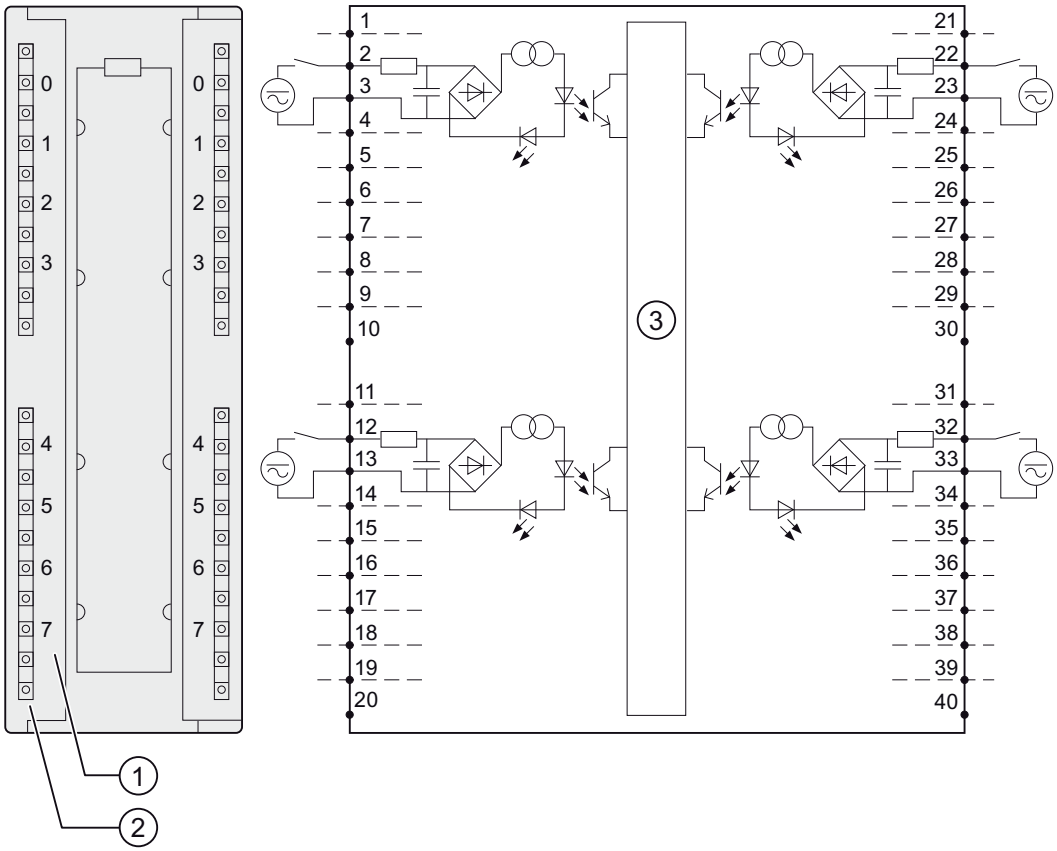

① Channel number
② Status display - green
③ Backplane bus interface

SM 321; DI 16 x UC 24/48 V - Technical specifications

Technical specifications	
Dimensions and weight	
Dimensions W x H x D	40 x 125 x 117
Weight	ca. 260 g
Module-specific data	
Supports isochronous mode	no
Number of inputs	16
Cable length • unshielded • shielded	 max. 600 m max. 1000 m
Voltages, currents, electrical potentials	
Number of simultaneously controlled inputs • horizontal mounting position up to 60 °C	 16
• other mounting positions up to 40 °C	16
Electrical isolation	
• Between channels and the backplane bus	Yes
• between channels In groups of	Yes 1
Maximum potential difference	
• Between channels and the backplane bus	170 VDC, 120 VAC
• between inputs of different groups	170 VDC, 120 VAC
Isolation test voltage	
• Between channels and the backplane bus	1500 VAC
• between inputs of different groups	1500 VAC
Current consumption	
• from the backplane bus	100 mA max.
Power loss of the module	
• Operation with 24 V • Operation with 48 V	typ. 1.5 W typ. 2.8 W
Status, interrupts, diagnostics	
Status display Interrupts Diagnostic functions	green LED per channel none none

Technical specifications	
Sensor selection data	
Input voltage • Rated value	 24 VDC/VAC or 48 VDC/VAC
• "1" signal • "0" signal • Frequency band	14 V to 60 V -5 V to 5 V 0 Hz to 63 Hz
Input current	
• "1" signal • "0" signal	typ. 2.7 mA -1 mA to +1 mA
Input delay	
• "0" to "1" transition • "1" to "0" transition	max. 16 ms max. 16 ms
Input characteristics	to IEC 61131, type 1
Connection of 2-wire BEROs	supported
• Permissible quiescent current	max. 1 mA
Wiring of the signal sensors	using a 40-pin front connector

3.15 Digital input module SM 321; DI 16 x DC 48-125 V; (6ES7321-1CH20-0AA0)

Order number: "Standard module"

6ES7321-1CH20-0AA0

Order number: "SIPLUS S7-300 module"

6AG1321-1CH20-2AA0

Properties

Properties of SM 321; DI 16 x DC 48-125 V:

- 16 inputs, electrically isolated in groups of 8
- Rated input voltage 48 VDC to 125 VDC
- suitable for switches and 2- /3-/4-wire proximity switches (BEROs)

Wiring and block diagram of SM 321; DI 16 x DC 48-125 V

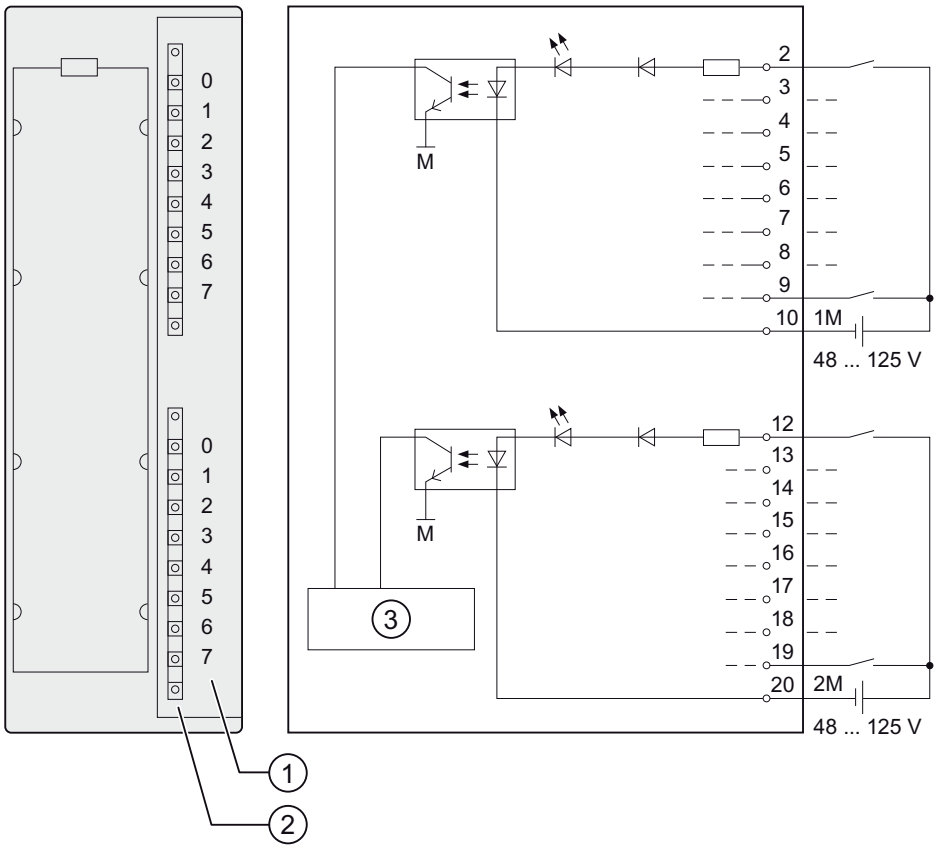

① Channel number
② Status display - green
③ Backplane bus interface

SM 321; DI 16 x DC 48-125 V - Technical specifications

Technical specifications		
Dimensions and weight		
Dimensions W x H x D (mm)	40 x 125 x 120	
Weight	ca. 200 g	
Module-specific data		
Supports isochronous mode	no	
Number of inputs	16	
Cable length • unshielded • shielded	 max. 600 m max. 1000 m	
Voltages, currents, electrical potentials		
Number of simultaneously controlled inputs **per group** at U_l	to 60 V	to 146 V
• horizontal mounting position to 50 °C to 60 °C	 8 8	 8 6
• vertical mounting position to 40 °C	8	8
Electrical isolation		
• between channels and the backplane bus	yes	
• between channels in groups of	yes 8	
Maximum potential difference • between different circuits	 146 VDC / 132 VAC	
Isolation test voltage	1500 VDC	
Current consumption • from the backplane bus	 max. 40 mA	
Power loss of the module	typ. 4.3 W	
Status, interrupts, diagnostics		
Status display	green LED per channel	
Interrupts	none	
Diagnostic functions	none	
Sensor selection data		
Input voltage		
• Rated value	48 VDC to 125 VDC	
• "1" signal	30 V to 146 V	
• "0" signal	-146 V to 15 V	
Input current • "1" signal	 typ. 3.5 mA	

Technical specifications	
Input delay • "0" to "1" transition • "1" to "0" transition	 0.1 ms to 3.5 ms 0.7 ms to 3.0 ms
Input characteristics	to IEC 61131, type 1
Connection of 2-wire BEROs • Permissible quiescent current	supported max. 1 mA
Wiring the signal transducers	using a 20-pin front connector

3.16 Digital input module SM 321; DI 16 x AC 120/230 V; (6ES7321-1FH00-0AA0)

Order number

6ES7321-1FH00-0AA0

Properties

Properties of SM 321, DI 16 x AC 120/230 V:

- 16 inputs, electrically isolated in groups of 4
- Rated input voltage 120/230 VAC
- Suitable for switches and 2-/3-wire proximity switches (AC)

Wiring and block diagrams of SM 321; DI 16 x AC 120/230 V

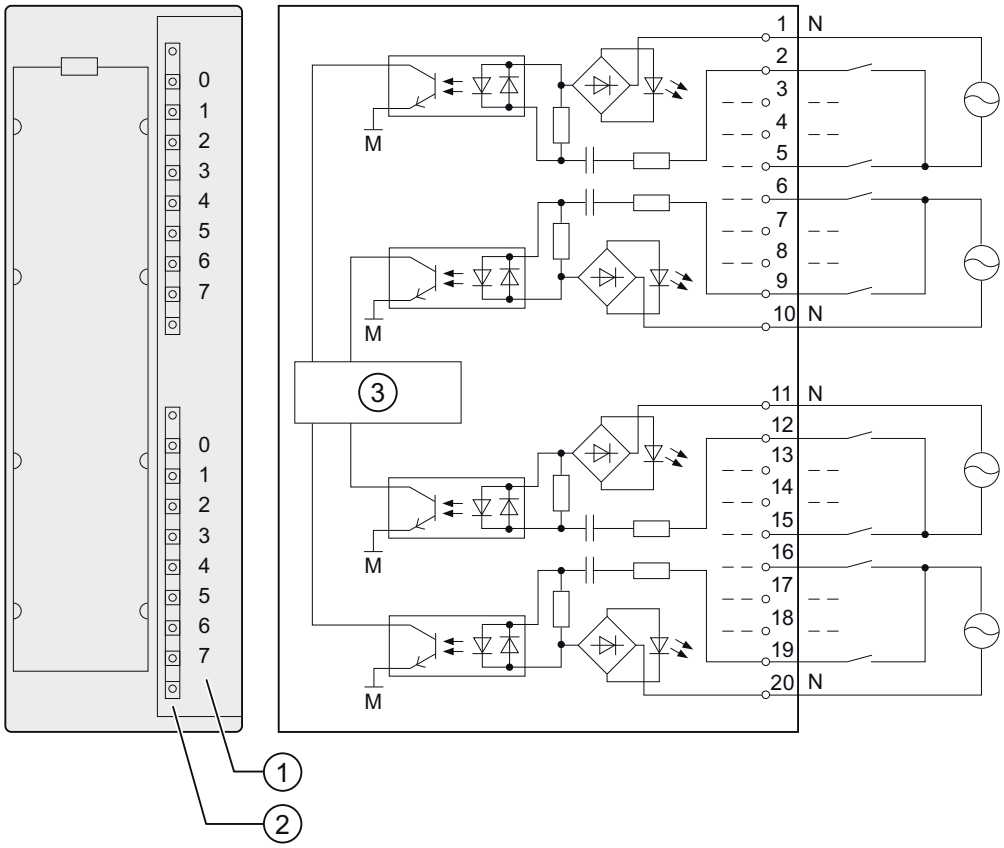

① Channel number
② Status display - green
③ Backplane bus interface

SM 321; DI 16 x AC 120/230 V- Technical specifications

Technical specifications	
Dimensions and weight	
Dimensions W x H x D	40 x 125 x 117
Weight	ca. 240 g
Module-specific data	
Supports isochronous mode	no
Number of inputs	16
Cable length • unshielded • shielded	 max. 600 m max. 1000 m
Voltages, currents, electrical potentials	
Rated load voltage L1 All load voltages must be connected to a common phase	120/230 V
Number of simultaneously controlled inputs	
• Horizontal mounting position to 60 °C	16
• Vertical mounting position to 40 °C	16
Electrical isolation	
• Between channels and the backplane bus	Yes
• between channels in groups of	Yes 4
Maximum potential difference	
• between $M_{internal}$ and inputs	230 VAC
• between inputs of different groups	500 VAC
Isolation test voltage	4000 VDC
Current consumption	
• from the backplane bus	max. 29 mA
Power loss of the module	typ. 4.9 W
Status, interrupts, diagnostics	
Status display	green LED per channel
Interrupts	none
Diagnostic functions	none
Sensor selection data	
Input voltage • Rated value • "1" signal • "0" signal • Frequency band	 120/230 VAC 79 V to 264 V 0 V to 40 V 47 Hz to 63 Hz

Technical specifications	
Input current • "1" signal 120 V, 60 Hz 230 V, 50 Hz	 typ. 6.5 mA typ. 16.0 mA
Input delay • "0" to "1" transition • "0" to "1" transition	 max. 25 ms max. 25 ms
Input characteristics	to IEC 61131, type 1
Connection of 2-wire BEROs • Permissible quiescent current	supported max. 2 mA
Wiring the signal transducers	using a 20-pin front connector

3.17 Digital input module SM 321; DI 8 x AC 120/230 V; (6ES7321-1FF01-0AA0)

Order number: "Standard module"

6ES7321-1FF01-0AA0

Order number: "SIPLUS S7-300 module"

6AG1321-1FF01-2AA0

Properties

Properties of SM 321, DI 8 x AC 120/230 V:

- 8 inputs, electrically isolated in groups of 2
- Rated input voltage 120/230 VAC
- suitable for switches and 2-/3-wire AC proximity switches

Wiring and block diagram of SM 321; DI 8 x AC 120/230 V

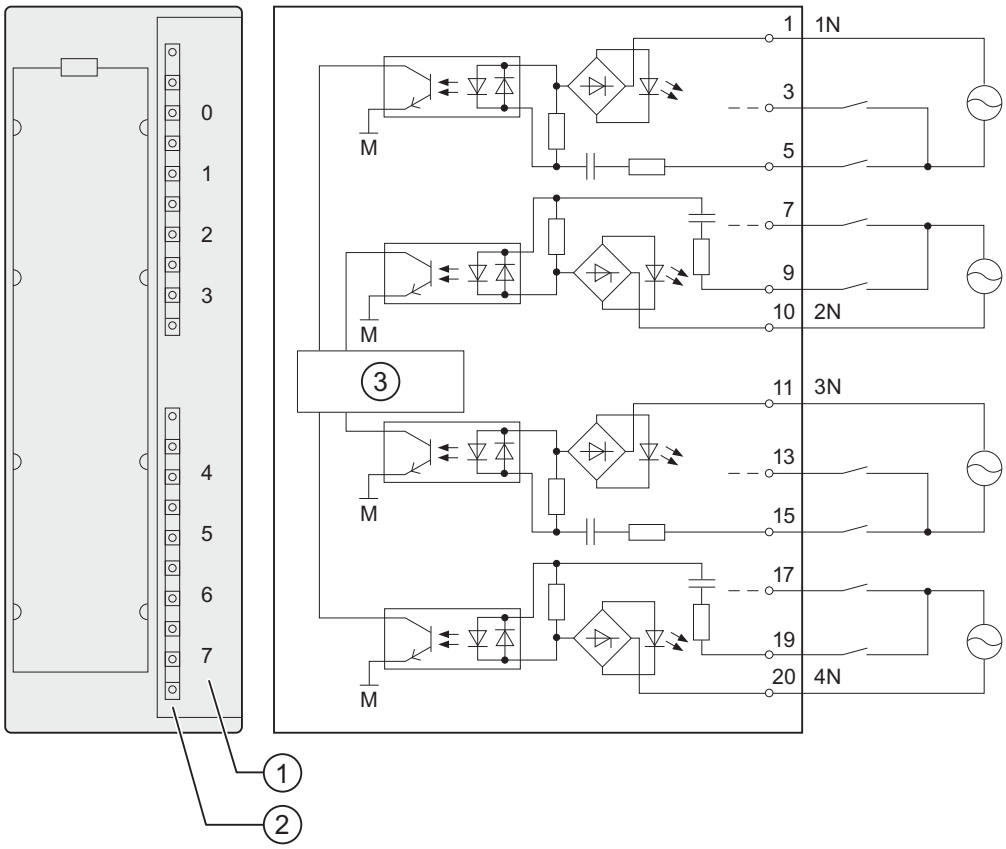

① Channel number
② Status display - green
③ Backplane bus interface

SM 321; DI 8 x AC 120/230 V - Technical specifications

Technical specifications	
Dimensions and weight	
Dimensions W x H x D (mm)	40 x 125 x 117
Weight	ca. 240 g
Module-specific data	
Supports isochronous mode	no
Number of inputs	8
Cable length • unshielded • shielded	 max. 600 m max. 1000 m
Voltages, currents, electrical potentials	
Number of simultaneously controlled inputs	
• horizontal mounting position to 60 °C	8
• vertical mounting position to 40 °C	8
Electrical isolation	
• between channels and the backplane bus	yes
• between channels in groups of	yes 2
Maximum potential difference	
• between $M_{internal}$ and inputs	230 VAC
• between inputs of different groups	500 VAC
Isolation test voltage	4000 VDC
Current consumption • from the backplane bus	 max. 29 mA
Power loss of the module	typ. 4.9 W
Status, interrupts, diagnostics	
Status display	green LED per channel
Interrupts	none
Diagnostic functions	none
Sensor selection data	
Input voltage • Rated value • "1" signal • "0" signal • Frequency band	 120/230 VAC 79 V to 264 V 0 V to 40 V 47 Hz to 63 Hz

Technical specifications	
Input current • "1" signal 120 V, 60 Hz 230 V, 50 Hz	 typ. 6.5 mA typ. 11 mA
Input delay • "0" to "1" transition • "1" to "0" transition	 max. 25 ms max. 25 ms
Input characteristics	to IEC 61131, type 1
Connection of 2-wire BEROs • Permissible quiescent current	supported max. 2 mA
Wiring of the signal transducers	using a 20-pin front connector

3.18 Digital input module SM 321; DI 8 x AC 120/230 V ISOL; (6ES7321-1FF10-0AA0)

Order number

6ES7321-1FF10-0AA0

Properties

Properties of the digital input module SM 321; DI 8 x AC 120/230 V ISOL:

- 8 inputs, electrically isolated in groups of 1
- Rated input voltage 120/230 VAC
- Suitable for switches and 2-/3-/4-wire AC proximity switches

Wiring and block diagrams of SM 321; DI 8 x AC 120/230 V ISOL

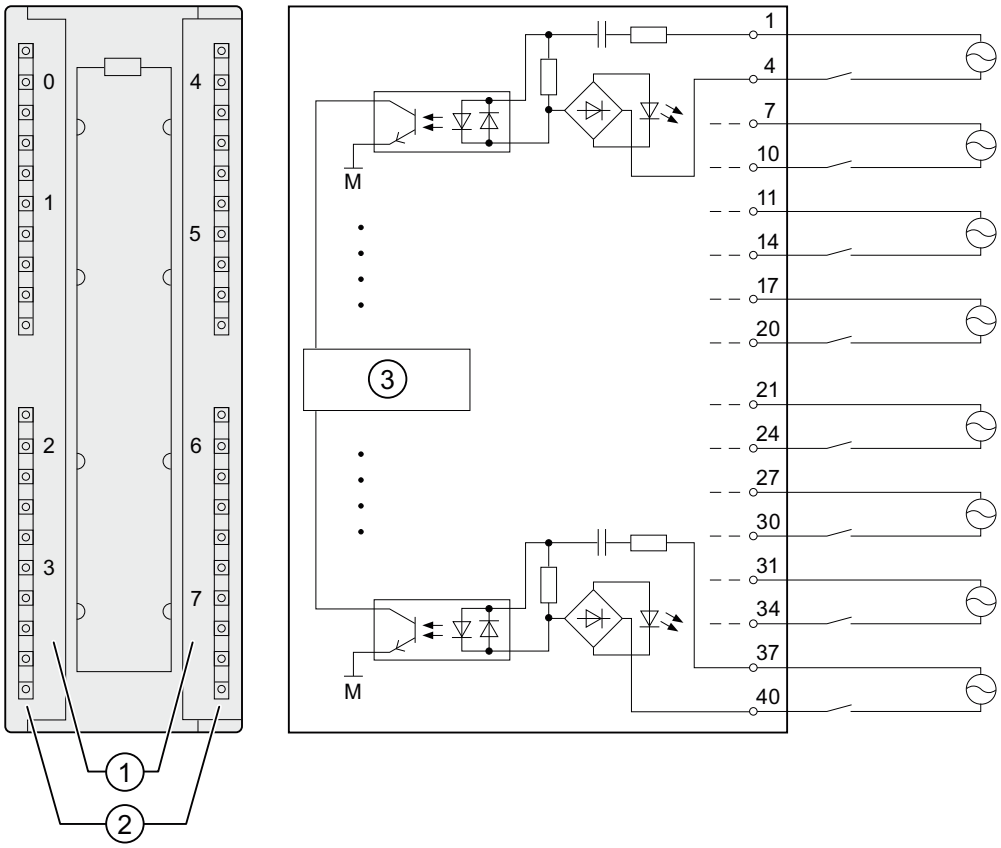

① Channel number
② Status display - green
③ Backplane bus interface

SM 321; DI 8 x AC 120/230 V ISOL - Technical specifications

Technical specifications	
Dimensions and weight	
Dimensions W × H × D	40 × 125 × 117
Weight	ca. 240 g
Module-specific data	
Supports isochronous mode	no
Number of inputs	8
Cable length • unshielded • shielded	 max. 600 m max. 1000 m
Voltages, currents, electrical potentials	
Rated load voltage L1 All load voltages must be connected to a common phase	120/230 VAC
Number of simultaneously controlled inputs	
• Horizontal mounting position to 60 °C	8
• Vertical mounting position to 40 °C	8
Electrical isolation	
• Between channels and the backplane bus	Yes
• between channels in groups of	Yes 1
Maximum potential difference	
• between $M_{internal}$ and inputs	230 VAC
• between inputs of different groups	500 VAC
Isolation test voltage	
• between $M_{internal}$ and inputs	1500 VAC
• between inputs of different groups	2000 VAC
Current consumption	
• from the backplane bus	max. 100 mA
Power loss of the module	typ. 4.9 W
Status, interrupts, diagnostics	
Status display	green LED per channel
Interrupts	none
Diagnostic functions	none

Technical specifications	
Sensor selection data	
Input voltage • Rated value • "1" signal • "0" signal • Frequency band	 120/230 VAC 79 V to 264 V 0 V to 40 V 47 Hz to 63 Hz
Input current • "1" signal 120 V, 60 Hz 230 V, 50 Hz	 typ. 7.5 mA typ. 17.3 mA
Input delay • "0" to "1" transition • "0" to "1" transition	 max. 25 ms max. 25 ms
Input characteristics	to IEC 61131, type 1
Connection of 2-wire BEROs	supported
• Permissible quiescent current	max. 2 mA
Wiring of the signal sensors	using a 40-pin front connector

3.19 Digital output module SM 322; DO 64 x DC 24 V/0.3 A sourcing; (6ES7322-1BP00-0AA0)

Order number

6ES7322-1BP00-0AA0

Properties

Properties of SM 322; DO 64 x DC 24 V/0,3 A Sourcing:

- 64 outputs, isolated in 4 groups of 16
- Rated load voltage 24 VDC

Wiring and block diagrams of SM 322; DO 64 x DC 24 V/0,3 A Sourcing

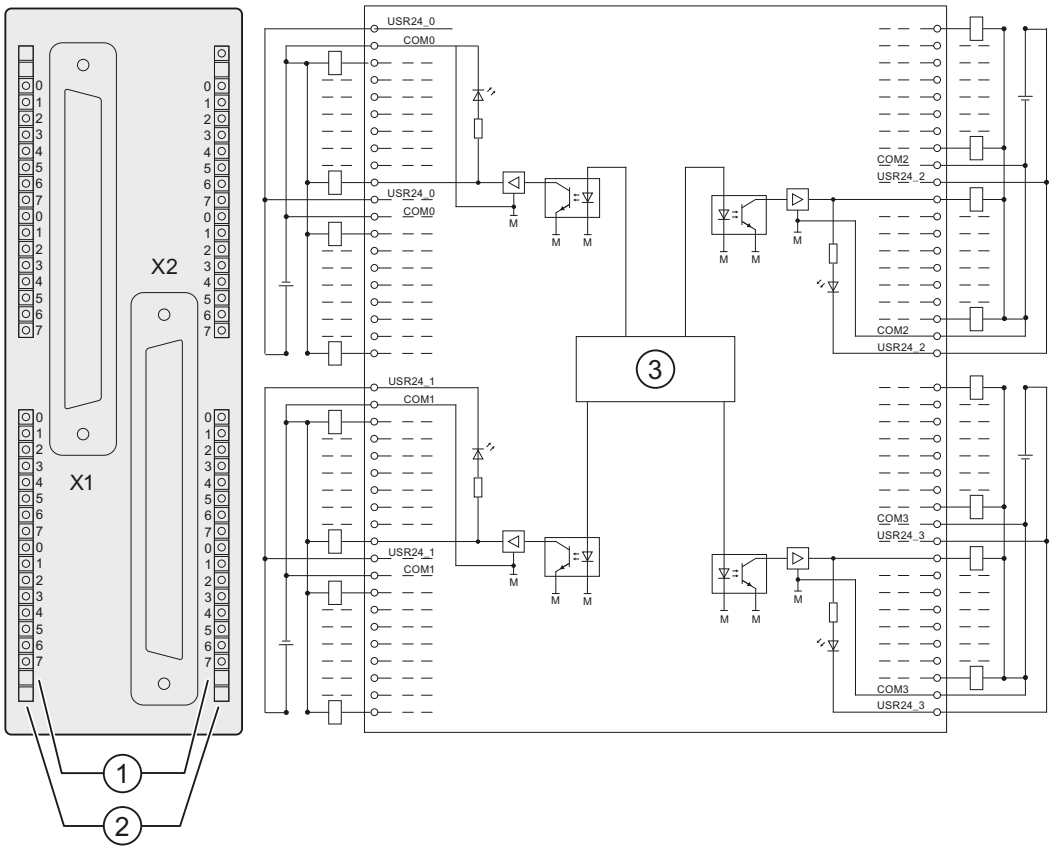

① Channel number
② Status display - green
③ Backplane bus interface

Terminal assignment of SM 322; DO 64 x DC 24 V/0,3 A Sourcing

The figure below shows how channels are assigned to addresses (output byte x up to output byte x+7).

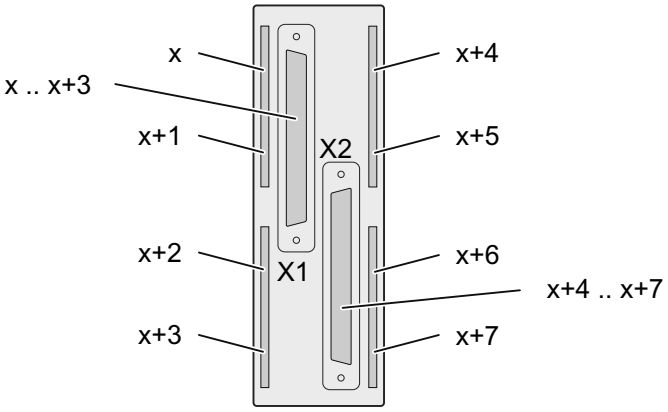

40-pin terminal block

SM 322; DO 64 x DC 24 V/0,3 A Sourcing features two terminal blocks for connecting actuators and sensors to the module front connector. A connecting cable is used to establish the module connections.

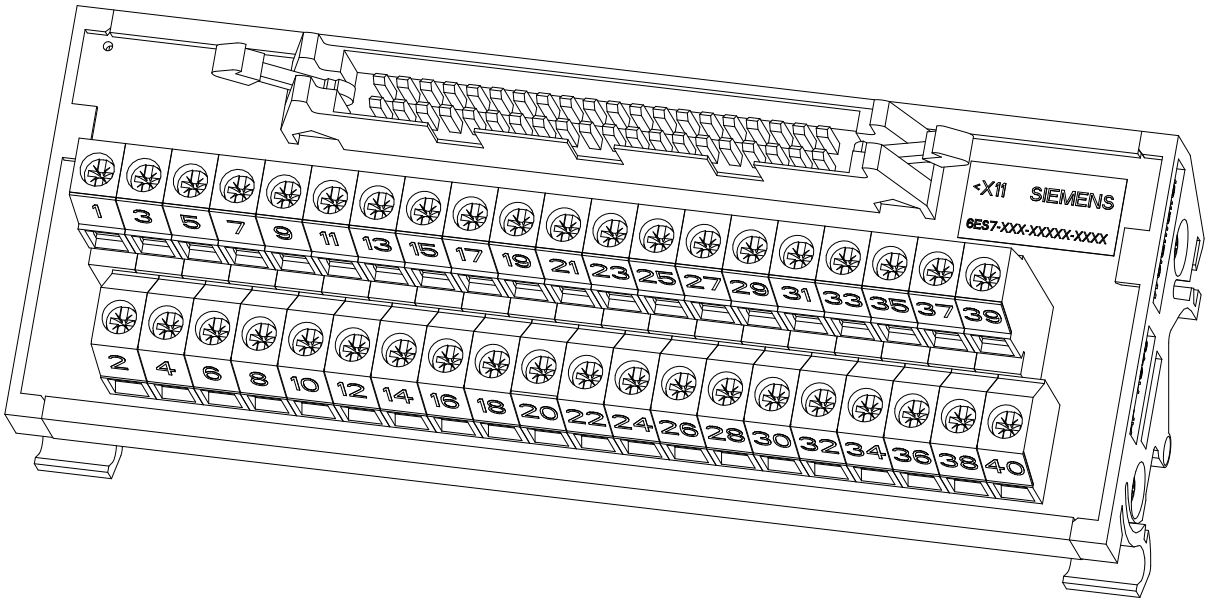

The table below shows how channel terminals are assigned to the connector for module SM 322; DO 64 x DC 24 V/0,3 A Sourcing.

Terminal	Function		Terminal	Function
1	O x.0		2	O x+2.0
3	O x.1		4	O x+2.1
5	O x.2		6	O x+2.2
7	O x.3		8	O x+2.3
9	O x.4		10	O x+2.4
11	O x.5		12	O x+2.5
13	O x.6		14	O x+2.6
15	O x.7		16	O x+2.7
17	1M		18	2M
19	1L+		20	2L+
21	O x+1.0		22	O x+3.0
23	O x+1.1		24	O x+3.1
25	O x+1.2		26	O x+3.2
27	O x+1.3		28	O x+3.3
29	O x+1.4		30	O x+3.4
31	O x+1.5		32	O x+3.5
33	O x+1.6		34	O x+3.6
35	O x+1.7		36	O x+3.7
37	1M		38	2M
39	1L+		40	2L+

Note

Connections x M and x L+ must be connected to a channel group.

Technical specifications of SM 322, DO 64 x DC 24 V, 0,3 A Sourcing

Technical specifications	
Dimensions and weight	
Dimensions (W x H x D) (mm)	40 x 125 x 112 (including protective barrier, required for connections which are not in use)
Weight	ca. 260 g
Module-specific data	
Supports isochronous mode	No
Number of outputs	64
Cable length • Unshielded • Shielded	 Max. 600 m Max. 1000 m
Voltages, currents, electrical potentials	
Rated load voltage L+	24 VDC
Total current of outputs (per group)	
For horizontal installation • Up to 25 °C • to 40 °C • to 60 °C	 Max. 2.0 A Max. 1.6 A Max. 1.2 A
For vertical installation • to 40 °C • Up to 25 °C	 Max. 1.6 A Max. 2.0 A
Electrical isolation	
• Between channels and the backplane bus • Between channels – In groups of	Yes Yes 16
Maximum potential difference • Between different circuits	 75 VDC/60 VAC
Isolation test voltage	500 VDC
Current consumption • From the backplane bus • From the user 24 V (L+) (separately for each group; no load)	 Max. 100 mA Max. 75 mA
Power loss of the module	Typ. 6.0 W
Status, interrupts, diagnostics	
Status display	Green LED per channel
Interrupts	None
Diagnostic functions	None

Technical specifications	
Actuator selection data	
Output type Output voltage • "1" signal	M switching 24 VDC L+ (-0.5 V)
Output current • "1" signal – Rated value – Permitted range • "0" signal (residual current)	 Typ. 0.3 A 2.4 mA to 0.36 A <100 µA
Output delay (resistive load) • "0" to "1" transition • "1" to "0" transition	 <550 µs <550 µs
Load resistance range	80 Ω to 10 kΩ
Lamp load	Max. <5 W
Wiring two outputs in parallel • For redundant load control • For performance increase	 supported (with external diode) not supported
Control of a digital input	supported
Switching frequency • With resistive load • With inductive load to IEC 947-5-1, DC 13[1] • With lamp load	 Max. <100 Hz Max. <0.5 Hz Max. <10 Hz
Internal limiting of the inductive shutdown voltage to:	53 V typ.
Short-circuit-proof output • Response threshold:	Yes, electronic 0.7 A to 1.9 A typ.
Wiring of the actuators	Two 40-pin terminal blocks
[1] For loads above 200 mA, a terminal diode is required for the inductive load.	

STEP 7 integration

64-channel I/O modules are integrated with the HSP 2019 V 1.0. The HSP forms part of STEP 7 V 5.4 SP2 and can be installed from STEP 7 V 5.4 and higher.

GSD/GSDML files

The 64-channel I/O modules are supported by the ET 200M versions listed below. Download the corresponding GSD/GSDML files from the following link: on the Internet (http://www.siemens.com/automation/service).

- To search for PROFIBUS GSD files, type in the entry ID 113498.
- To search for PROFINET GSDML files, type in the entry ID: 25057900.

PROFIBUS

- IM 153-1, as of 6ES7153-1AA03-0XB0, E12 with GSD file SI01801D.*, version V 1.5
- IM 153-2, as of 6ES7153-2BA02-0XB0, E01 with GSD file SI04801E.*, version V 1.0

PROFINET

- IM 153-4 PN, as of 6ES7153-4AA00-0XB0 with GSDML file version V 2.1
- IM153-4 PN IO HF, as of 6ES7153-4BA00-0XB0 with GSDML file version V2.1

Using the module in S7-300 and ET 200M

The digital output module SM 322, DO 64 can be used with all available CPUs, provided that the station has been configured using STEP 7. Startup cannot be performed if no configuration is loaded.

The module can be used with the CPUs listed in the table below.

C-CPUs (compact CPUs)	Order number
CPU 312C	6ES7312-5BD0x-0AB0
	6ES7312-5BE03-0AB0
CPU 313C	6ES7313-5BE0x-0AB0
	6ES7313-5BF03-0AB0
CPU 313C-2 DP	6ES7313-6CE0x-0AB0
	6ES7313-6CF03-0AB0
CPU313C-2 PtP	6ES7313-6BE0x-0AB0
	6ES7313-6BF03-0AB0
CPU 314C-2 DP	6ES7314-6CF0x-0AB0
	6ES7314-6CG03-0AB0
CPU 314C-2 PtP	6ES7314-6BF0x--0AB0
	6ES7314-6BG03--0AB0

M-CPUs	Order number
CPU 312	6ES7312-1AD1x-0AB0
	6ES7312-1AE13-0AB0
CPU 314	6ES7314-1AF1x-0AB0
	6ES7314-1AG13-0AB0
CPU 315-2 DP	6ES7315-2AF0x-0AB0
	6ES7315-2AG10-0AB0
CPU 316-2 DP	6ES7316-2AG00-0AB0
CPU 317-2 DP	6ES7317-2AJ10-0AB0
CPU315-2 PN/DP	6ES7315-2EG10-0AB0
	6ES7315-2EH13-0AB0
CPU317-2 PN/DP	6ES7317-2EJ10-0AB0
	6ES7317-2EK13-0AB0
CPU 319-3 PN/DP	6ES7318-3EL00-0AB0

F-CPUs	Order number
CPU 315F-2 DP	6ES7315-6FF0x-0AB0
CPU 317F-2 DP	6ES7317-6FF0x-0AB0
CPU315F-2 PN/DP	6ES7315-2FH1x-0AB0
CPU 317F-2 PN/DP	6ES7317-2FJ10-0AB0
	6ES7317-2FK13-0AB0
CPU 319F-3 PN/DP	6ES7318-3FL00-0AB0

T-CPUs	Order number
CPU 315T-2 DP	6ES7315-6TG10-0AB0
CPU317T-2 DP	6ES7317-6TJ10-0AB0

C7-CPUs	Order number
C7-613	6ES7613-1CA01-0AE3
C7-635 Touch	6ES7635-2EB01-0AE3
C7-635 Key	6ES7635-2EC01-0AE3
C7-636 Touch	6ES7636-2EB00-0AE3
C7-636 Key	6ES7636-2EC00-0AE3

WARNING

This module must be configured in a STEP 7 project to ensure that addressing and the allocation of input/output points is performed correctly. Using the module without having first carried out this configuration work can lead to machines or processes operating in an unexpected manner.

If machines or processes do run in an unexpected manner, this can result in death, serious injury, and/or material damage.

3.20 Digital output module SM 322; DO 64 x DC 24 V/0.3 A Sinking (6ES7322-1BP50-0AA0)

Order number

6ES7322-1BP50-0AA0

Properties

Characteristics of the SM 322; DO 64 x DC 24 V, 0,3 A Sinking digital output module:

- 64 outputs, isolated in 4 groups of 16
- Rated load voltage 24 VDC

Wiring and block diagrams of SM 322; DO 64 x DC 24 V, 0,3 A Sinking

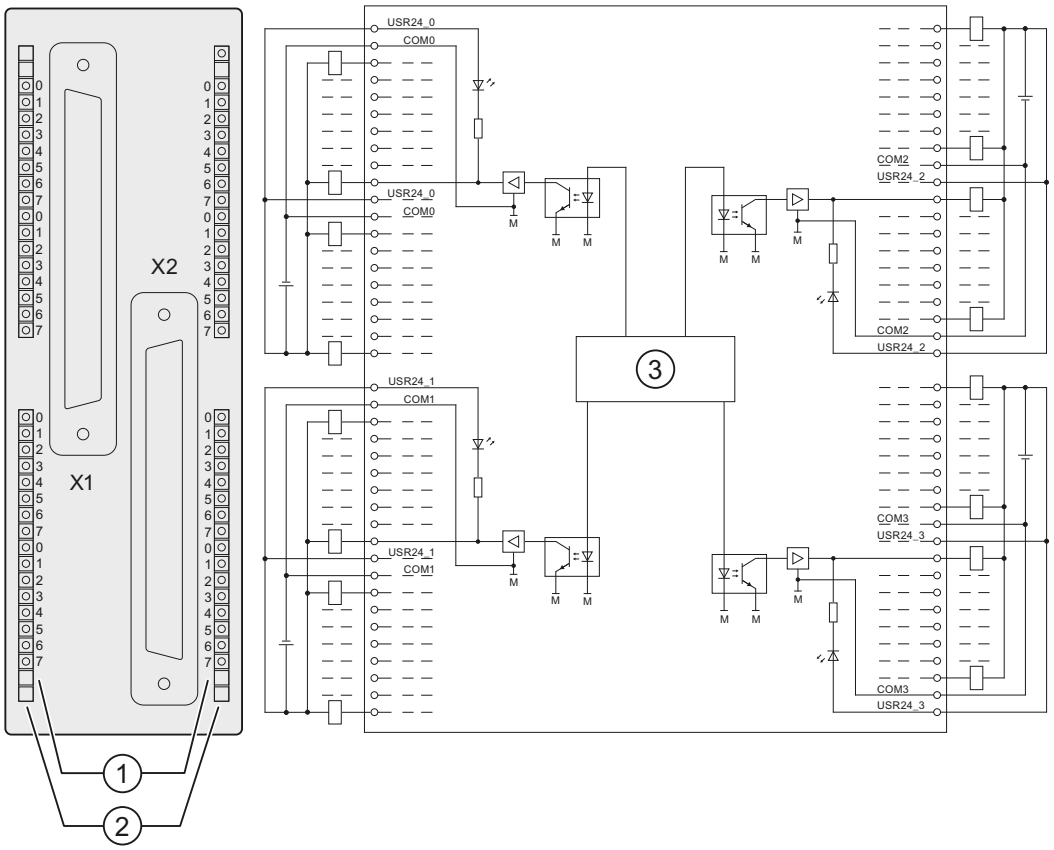

① Channel number
② Status display - green
③ Backplane bus interface

Terminal assignment of SM 322; DO 64 x DC 24 V, 0,3 A Sinking

The figure below shows how channels are assigned to addresses (output byte x to output byte x+7).

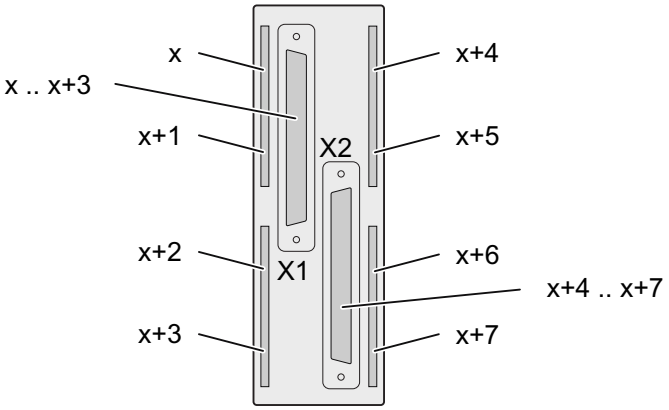

40-pin terminal block

SM 322; DO 64 x DC 24 V/0,3 A Sinking features two terminal blocks for connecting actuators and sensors to the module front connector. A connecting cable is used to establish the module connections.

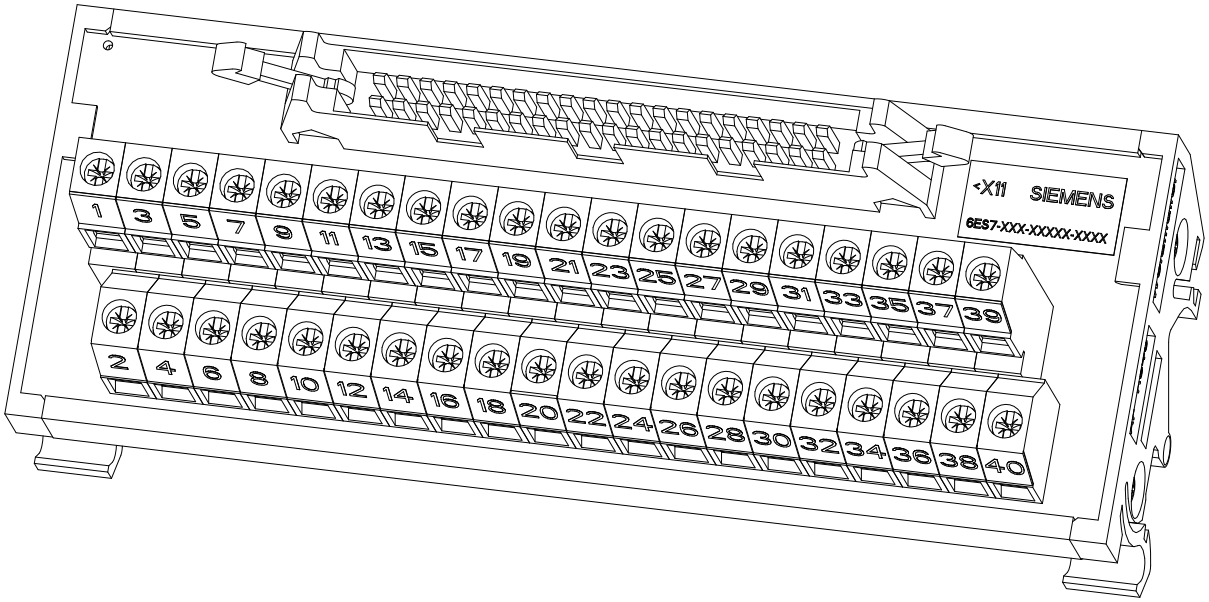

The table below shows how channel terminals are assigned to the terminal block for module SM 322; DO 64 x DC 24 V/0,3 A Sinking..

Terminal	Function		Terminal	Function
1	O x.0		2	O x+2.0
3	O x.1		4	O x+2.1
5	O x.2		6	O x+2.2
7	O x.3		8	O x+2.3
9	O x.4		10	O x+2.4
11	O x.5		12	O x+2.5
13	O x.6		14	O x+2.6
15	O x.7		16	O x+2.7
17	1M		18	2M
19	1L+		20	2L+
21	O x+1.0		22	O x+3.0
23	O x+1.1		24	O x+3.1
25	O x+1.2		26	O x+3.2
27	O x+1.3		28	O x+3.3
29	O x+1.4		30	O x+3.4
31	O x+1.5		32	O x+3.5
33	O x+1.6		34	O x+3.6
35	O x+1.7		36	O x+3.7
37	1M		38	2M
39	1L+		40	2L+

Note

Terminals x M and x L+ must be connected on the terminal block.

Technical specifications of SM 322, DO 64 x DC 24 V, 0,3 A (Sinking)

Technical specifications	
Dimensions and weight	
Dimensions (W x H x D) (mm)	40 x 125 x 112 (including protective barrier, required for connections which are not in use)
Weight	ca. 260 g
Module-specific data	
Supports isochronous mode	No
Number of outputs	64
Cable length • Unshielded • Shielded	 Max. 600 m Max. 1000 m
Voltages, currents, electrical potentials	
Rated load voltage L+	24 VDC
Total current of outputs (per group)	
For horizontal installation • Up to 25 °C • to 40 °C • to 60 °C	 Max. 2.0 A Max. 1.6 A Max. 1.2 A
For vertical installation • to 40 °C • Up to 25 °C	 Max. 1.6 A Max. 2.0 A
Electrical isolation • Between channels and the backplane bus • Between channels In groups of	 Yes Yes 16
Maximum potential difference • Between different circuits	 75 VDC/60 VAC
Isolation test voltage	500 VDC
Current consumption • From the backplane bus • From load voltage L+ (no load)	 Max. 100 mA Max. 75 mA
Power loss of the module	Typ. 6.0 W
Status, interrupts, diagnostics	
Status display	Green LED per channel
Interrupts	None
Diagnostic functions	None

Technical specifications	
Actuator selection data	
Output type Output voltage • "1" signal	Sinking 24 VDC M+ (0.5 V) at full load
Output current "1" signal • Rated value • Permitted range "0" signal (residual current)	 Typ. 0.3 A 2.4 mA to 0.36 A <100 µA
Output delay (resistive load) • "0" to "1" transition • "1" to "0" transition	 <450 µs <450 µs
Load resistance range	80 Ω to 10 kΩ
Lamp load	Max. 5 W
Wiring two outputs in parallel • for redundant load control • for performance increase	 supported (with external diode) not supported
Control of a digital input	supported
Switching frequency • With resistive load • With inductive load to IEC 947-5-1, DC 13[1] • With lamp load	 Max. 100 Hz Max. 0.5 Hz Max. 10 Hz
Internal limiting of the inductive shutdown voltage to:	Typ. 45 V
Short-circuit protection of the output • Response threshold	Yes, electronic 1.7 A to 3.5 A typ.
Wiring of the actuators	Two 40-pin terminal blocks
[1] For loads above 200 mA, a terminal diode is required for the inductive load.	

Recommended fuse

Groups of outputs must be protected by a 4 A/125 V fast-blow fuse (recommended: Littelfuse 235 004P 125 V 4 A). If the fuse is installed in a danger zone in accordance with the National Electric Code (NEC), you must always use a suitable tool to remove it. Before removing or replacing the fuse, you must determine whether or not you are dealing with a danger zone.

STEP 7 integration

64-channel I/O modules are integrated with the HSP 2019 V 1.0. The HSP forms part of STEP 7 V 5.4 SP2 and can be installed from STEP 7 V 5.4 and higher.

GSD/GSDML files

The 64-channel I/O modules are supported by the ET 200M versions listed below. Download the corresponding GSD/GSDML files from the following link: on the Internet (http://www.siemens.com/automation/service).

- To search for PROFIBUS GSD files, type in the entry ID 113498.
- To search for PROFINET GSDML files, type in the entry ID: 25057900.

PROFIBUS

- IM 153-1, as of 6ES7153-1AA03-0XB0, E12 with GSD file SI01801D.*, version V 1.5
- IM 153-2, as of 6ES7153-2BA02-0XB0, E01 with GSD file SI04801E.*, version V 1.0

PROFINET

- IM 153-4 PN, as of 6ES7153-4AA00-0XB0 with GSDML file version V 2.1
- IM153-4 PN IO HF, as of 6ES7153-4BA00-0XB0 with GSDML file version V2.1

Using the module in S7-300 and ET 200M

The digital output module SM 322, 64 DO can be used with all available CPUs, provided that the station has been configured using STEP 7. Startup cannot be performed if no configuration is loaded.

The module can be used with the CPUs listed in the table below.

C-CPUs (compact CPUs)	Order number
CPU 312C	6ES7312-5BD0x-0AB0
	6ES7312-5BE03-0AB0
CPU 313C	6ES7313-5BE0x-0AB0
	6ES7313-5BF03-0AB0
CPU 313C-2 DP	6ES7313-6CE0x-0AB0
	6ES7313-6CF03-0AB0
CPU313C-2 PtP	6ES7313-6BE0x-0AB0
	6ES7313-6BF03-0AB0
CPU 314C-2 DP	6ES7314-6CF0x-0AB0
	6ES7314-6CG03-0AB0
CPU 314C-2 PtP	6ES7314-6BF0x--0AB0
	6ES7314-6BG03--0AB0

M-CPUs	Order number
CPU 312	6ES7312-1AD1x-0AB0
	6ES7312-1AE13-0AB0
CPU 314	6ES7314-1AF1x-0AB0
	6ES7314-1AG13-0AB0
CPU 315-2 DP	6ES7315-2AF0x-0AB0
	6ES7315-2AG10-0AB0
CPU 316-2 DP	6ES7316-2AG00-0AB0
CPU 317-2 DP	6ES7317-2AJ10-0AB0
CPU315-2 PN/DP	6ES7315-2EG10-0AB0
	6ES7315-2EH13-0AB0
CPU317-2 PN/DP	6ES7317-2EJ10-0AB0
	6ES7317-2EK13-0AB0
CPU 319-3 PN/DP	6ES7318-3EL00-0AB0

F-CPUs	Order number
CPU 315F-2 DP	6ES7315-6FF0x-0AB0
CPU 317F-2 DP	6ES7317-6FF0x-0AB0
CPU315F-2 PN/DP	6ES7315-2FH1x-0AB0
CPU 317F-2 PN/DP	6ES7317-2FJ10-0AB0
	6ES7317-2FK13-0AB0
CPU 319F-3 PN/DP	6ES7318-3FL00-0AB0

T-CPUs	Order number
CPU 315T-2 DP	6ES7315-6TG10-0AB0
CPU317T-2 DP	6ES7317-6TJ10-0AB0

C7-CPUs	Order number
C7-613	6ES7613-1CA01-0AE3
C7-635 Touch	6ES7635-2EB01-0AE3
C7-635 Key	6ES7635-2EC01-0AE3
C7-636 Touch	6ES7636-2EB00-0AE3
C7-636 Key	6ES7636-2EC00-0AE3

WARNING

This module must be configured in a STEP 7 project to ensure that addressing and the allocation of input/output points is performed correctly. Using the module without having first carried out this configuration work can lead to machines or processes operating in an unexpected manner.

If machines or processes do run in an unexpected manner, this can result in death, serious injury, and/or material damage.

3.21 Digital output module SM 322; DO 32 x DC 24 V/ 0.5 A; (6ES7322-1BL00-0AA0)

Order number

6ES7322-1BL00-0AA0

Properties

Properties of SM 322; DO 32 **x** DC 24 V/0.5 A:

- 32 outputs, electrically isolated in groups of 8
- Output current 0.5 A
- Rated load voltage 24 VDC
- Suitable for solenoid valves, DC contactors and signal lamps

Use of the module with high-speed counters

Please note when using the module in combination with high-speed counters:

Note

When using a mechanical contact to switch on the 24-V power supply to SM 322; DO 32 x DC 24 V/0.5 A, its outputs will carry "1" signal for the duration of ca. 50 µs due to the circuit structure.

Wiring and block diagram of SM 322; DO 32 x DC 24 V/ 0.5 A

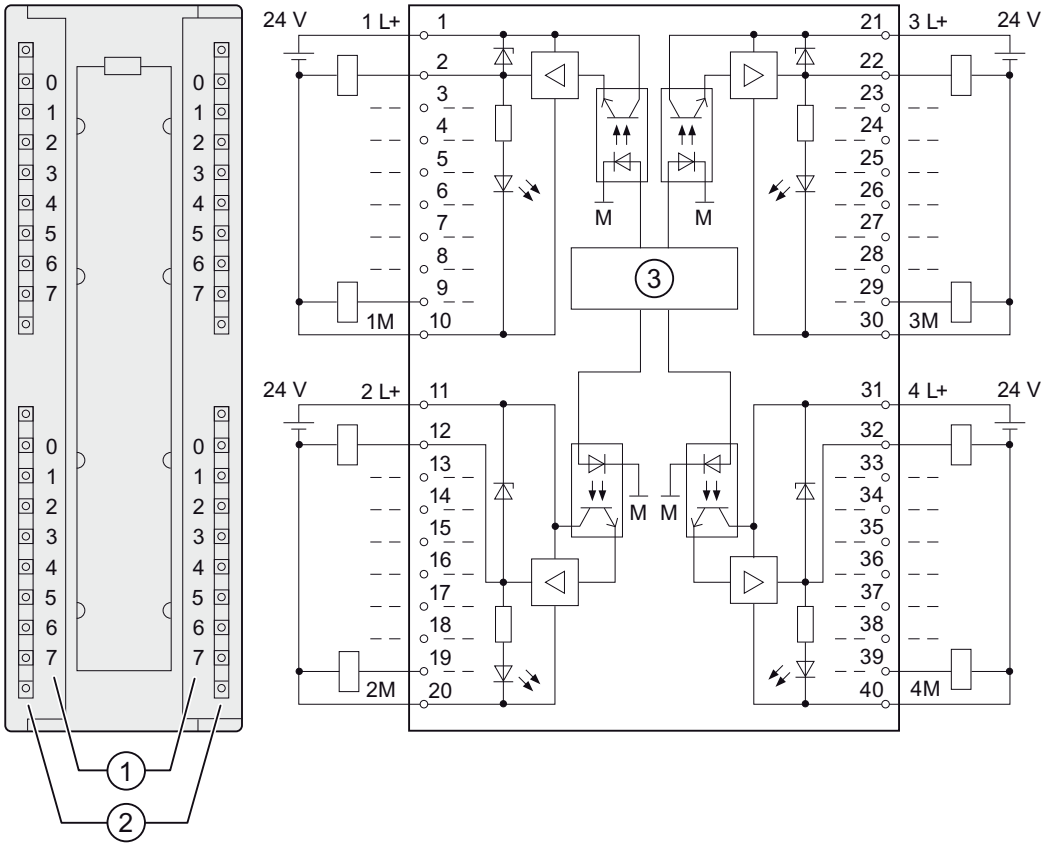

① Channel number
② Status display - green
③ Backplane bus interface

Terminal assignment

The figure below shows the channel addressing (output byte x to output byte x+3).

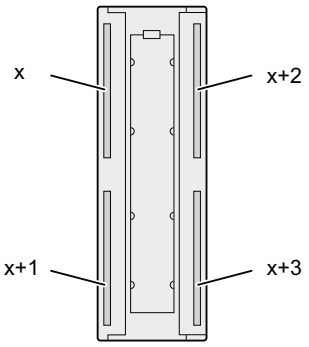

SM 322; DO 32 x DC 24 V/ 0.5 A - Technical specifications

Technical specifications	
Dimensions and weight	
Dimensions W x H x D (mm)	40 x 125 x 117
Weight	ca. 260 g
Module-specific data	
Supports isochronous mode	no
Number of outputs	32
Cable length • unshielded • shielded	 max. 600 m max. 1000 m
Voltages, currents, electrical potentials	
Rated load voltage L+	24 VDC
Total current of outputs (per group)	
• horizontal mounting position to 40 °C to 60 °C	 max. 4 A max. 3 A
• vertical mounting position to 40 °C	max. 2 A
Electrical isolation • between channels and the backplane bus	 yes
• between channels in groups of	yes 8
Maximum potential difference • between different circuits	 75 VDC / 60 VAC
Isolation test voltage	500 VDC
Current consumption • from the backplane bus • from load voltage L+ (no-load)	 max. 110 mA max. 160 mA
Power loss of the module	typ. 6.6 W
Status, interrupts, diagnostics	
Status display	green LED per channel
Interrupts	none
Diagnostic functions	none
Actuator selection data	
Output voltage • "1" signal	 min. L + (- 0.8 V)

Technical specifications	
Output current	
• "1" signal Rated value Permitted range	 0.5 A 5 mA to 0.6 A
• "0" signal (residual current)	max. 0.5 mA
Output delay (resistive load)	
• "0" to "1" transition	max. 100 µs
• "1" to "0" transition	max. 500 µs
Load resistance range	48 Ω to 4 kΩ
Lamp load	max. 5 W
Wiring two outputs in parallel	
• For redundant load control	supported (only outputs of the same group)
• For performance increase	Not supported
Control of a digital input	Supported
Switching frequency	
• with resistive load	max. 100 Hz
• with inductive load to IEC 947-5-1, DC 13	max. 0.5 Hz
• with lamp load	max. 10 Hz
Internal limiting of the inductive shutdown voltage to	typ. L + (-53 V)
Short-circuit protection of the output	yes, electronic
• Threshold	typ. 1 A
Wiring of the actuators	using a 40-pin front connector

3.22 Digital output module SM 322; DO 32 x AC 120/230 V/1 A; (6ES7322-1FL00-0AA0)

Order number

6ES7322-1FL00-0AA0

Properties

Properties of SM 322; DO 32 x AC 120/230 V/1 A:

- 32 outputs, fused and electrically isolated in groups of 8
- Output current 1.0 A
- Rated load voltage 120/230 VAC
- Blown fuse indicator for each group
- Suitable for AC solenoids, contactors, starters, FHP motors and signal lamps
- Group error display (SF)

Wiring and block diagram of SM 322; DO 32 x AC 120/230 V/1 A

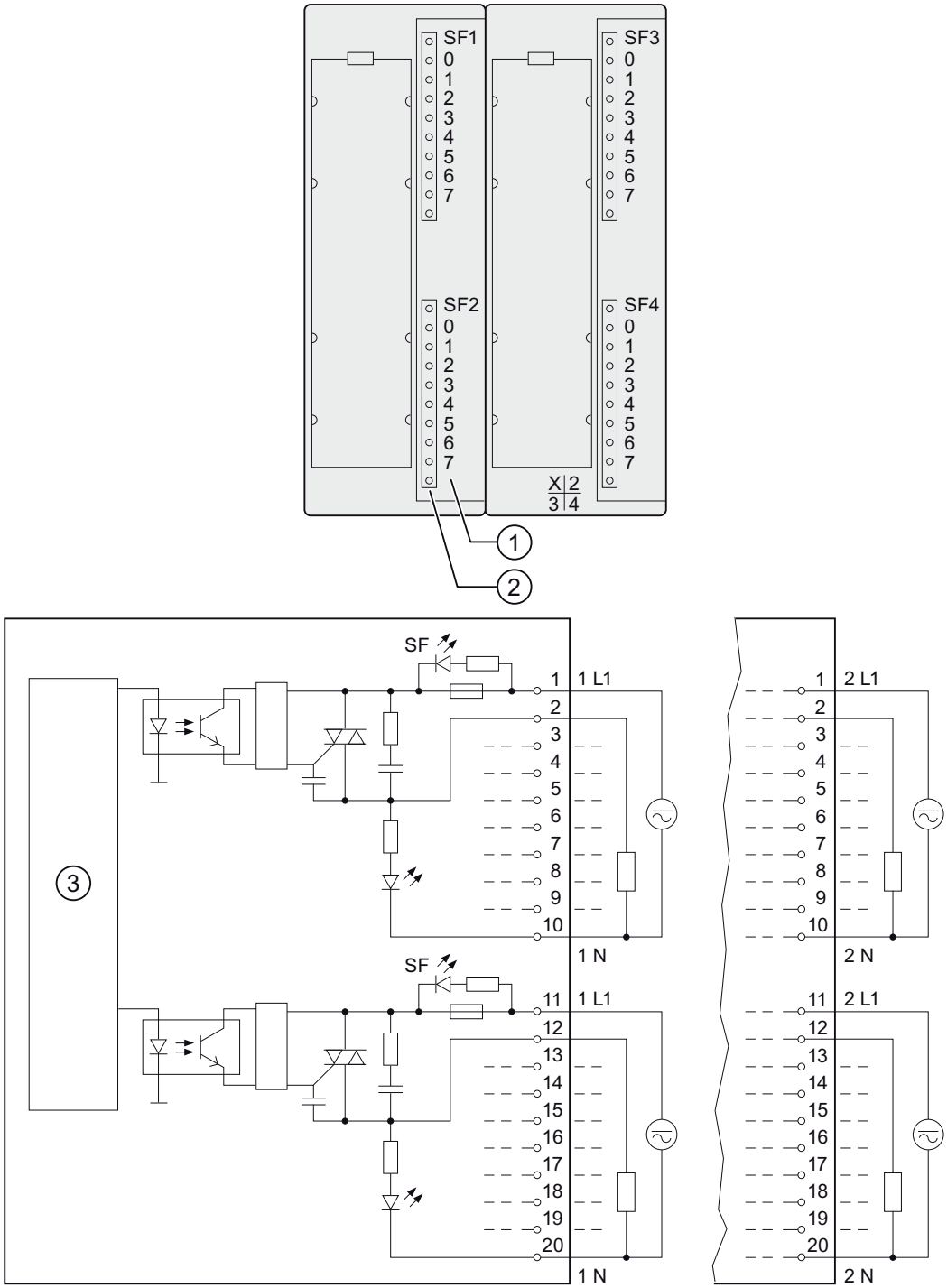

① Channel numbers
② Status display - green
Error LED - red
③ Backplane bus interface

Terminal assignment

The figure below shows the channel addressing (output byte x to output byte x+3).

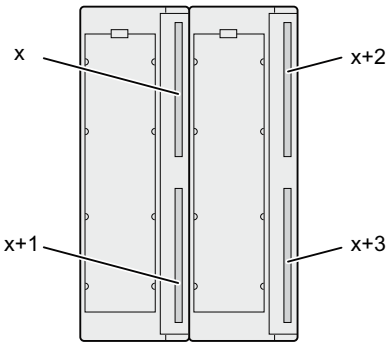

SM 322; DO 32 x AC 120/230 V/1 A - Technical specifications

Technical specifications	
Dimensions and weight	
Dimensions W x H x D (mm)	80 x 125 x 117
Weight	ca. 500 g
Module-specific data	
Supports isochronous mode	no
Number of outputs	32
Cable length • unshielded • shielded	 max. 600 m max. 1000 m
Voltages, currents, electrical potentials	
Rated load voltage L1	120/230 VAC
• Maximum frequency range	47 Hz to 63 Hz
Total current of outputs (per group)	
• horizontal mounting position to 60 °C to 40 °C	 max. 3 A max. 4 A
• vertical mounting position • to 40 °C	 max. 4 A
Electrical isolation	
• between channels and the backplane bus	yes
• between channels in groups of	yes 8
Maximum potential difference	
• between $M_{internal}$ and outputs	250 VAC
• between outputs of different groups	250 VAC

Technical specifications	
Isolation test voltage	4000 VDC
Current consumption • from the backplane bus • from load voltage L1 (no-load)	 max. 190 mA max. 10 mA
Power loss of the module	typ. 25 W
Status, interrupts, diagnostics	
Status display	green LED per channel
Interrupts	no
Diagnostic functions • Group error display	yes red LED (SF)
Actuator selection data	
Output voltage • "1" signal	 min. L1 (-0.8 V)
Output current • "1" signal Rated value Permitted range Maximum inrush current (per group)	 1 A 10 mA to 1 A 10 A (for two AC cycles)
• "0" signal (residual current)	max. 2 mA
Output delay (resistive load)	
• "0" to "1" transition	1 AC cycle
• "1" to "0" transition	1 AC cycle
Blocking voltage zero transition	 max. 60 V
Size of the motor starter	max. size 4 to NEMA
Lamp load	max. 50 W
Wiring two outputs in parallel	
• for redundant load control	supported (only outputs of the same group)
• for performance increase	not supported
Control of a digital input	supported
Switching frequency • with resistive load • with inductive load to IEC 947-5-1, AC 15 • with lamp load	 max. 10 Hz max. 0.5 Hz 1 Hz
Short-circuit protection of the output	no
Wiring of the actuators	using a 20-pin* front connector

*Requires two front connectors of the appropriate version

3.23 Digital output module SM 322; DO 16 x DC 24 V/ 0.5 A; (6ES7322-1BH01-0AA0)

Order number: "Standard module"

6ES7322-1BH01-0AA0

Order number: "SIPLUS S7-300 module"

6AG1322-1BH01-2AA0

Properties

Properties of SM 322; DO 16 x DC 24 V/0.5 A:

- 16 outputs, electrically isolated in groups of 8
- Output current 0.5 A
- Rated load voltage 24 VDC
- Suitable for solenoid valves, DC contactors and signal lamps

Use of the module with high-speed counters

Please note when using the module in combination with high-speed counters:

Note

When using a mechanical contact to switch on the 24-V power supply to SM 322; DO 16 x DC 24 V/0.5 A, its outputs will carry "1" signal for the duration of ca. 50 µs, due to the circuit structure.

Wiring and block diagram of SM 322; DO 16 x DC 24 V/ 0.5 A

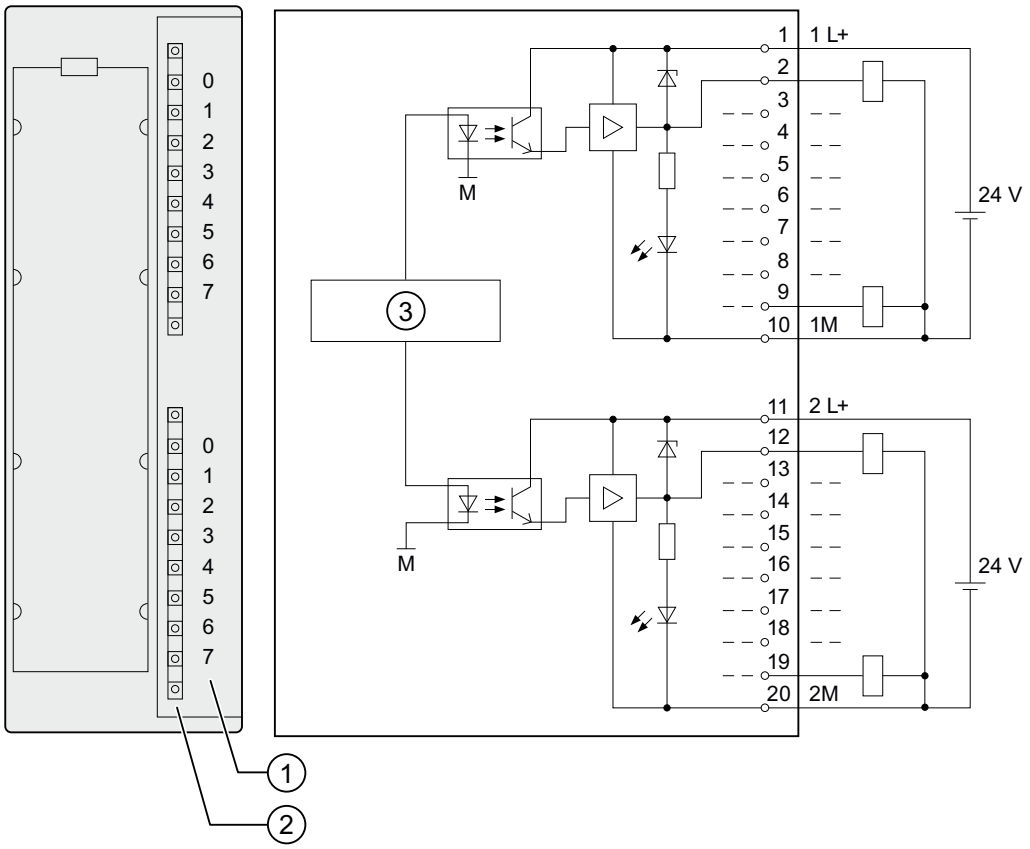

① Channel number
② Status display - green
③ Backplane bus interface

SM 322; DO 16 x DC 24 V/0.5 A - Technical specifications

Technical specifications	
Dimensions and weight	
Dimensions W x H x D (mm)	40 x 125 x 117
Weight	ca. 190 g
Module-specific data	
Supports isochronous mode	no
Number of outputs	16
Cable length • unshielded • shielded	 max. 600 m max. 1000 m
Voltages, currents, electrical potentials	
Rated load voltage L+	24 VDC
Total current of outputs (per group)	
• horizontal mounting position to 40 °C to 60 °C	 max. 4 A max. 3 A
• vertical mounting position to 40 °C	 max. 2 A
Electrical isolation	
• between channels and the backplane bus	yes
• between channels in groups of	yes 8
Maximum potential difference • between different circuits	 75 VDC / 60 VAC
Isolation test voltage	500 VDC
Current consumption • from the backplane bus • from load voltage L+ (no-load)	 max. 80 mA max. 80 mA
Power loss of the module	typ. 4.9 W
Status, interrupts, diagnostics	
Status display	green LED per channel
Interrupts	none
Diagnostic functions	none
Actuator selection data	
Output voltage • "1" signal	min. L + (- 0.8 V)

Technical specifications	
Output current	
• "1" signal Rated value Permitted range	 0.5 A 5 mA to 0.6 A
• "0" signal (residual current)	Max. 0.5 mA
Output delay (resistive load)	
• "0" to "1" transition	max. 100 µs
• "1" to "0" transition	max. 500 µs
Load resistance range	48 Ω to 4 kΩ
Lamp load	max. 5 W
Wiring two outputs in parallel	
• For redundant load control	Supported (only outputs of the same group)
• For performance increase	Not supported
Control of a digital input	Supported
Switching frequency	
• with resistive load	max. 100 Hz
• with inductive load to IEC 947-5-1, DC 13	max. 0.5 Hz
• with lamp load	max. 10 Hz
Internal limiting of the inductive shutdown voltage to	typ. L + (-53 V)
Short-circuit protection of the output	yes, electronic
• Threshold	typ. 1 A
Wiring of the actuators	using a 20-pin front connector

3.24 Digital output module SM 322; DO 16 x DC 24 V/0.5 A: (6ES7322-8BH10-0AB0)

Order number

6ES7322-8BH10-0AB0

Properties

The digital output module SM 322; DO 16 x DC24 V/0.5 A is distinguished by the following properties:

- 16 outputs, electrically isolated in groups of 4 channels
- A nominal load voltage of 24 V DC
- Configurable diagnostics
- Programmable diagnostic interrupt
- Redundant
- Wire break at "0" and "1" signal
- Identification Data
- Firmware update possible

Use of the module with high-speed counters

Please note when using the module in combination with high-speed counters.

Note

When using a mechanical contact to switch on the 24-V power supply to SM 322; DO 16 x DC 24 V/0.5 A, its outputs will carry "1" signal for the duration of ca. 50 µs, due to the circuit structure.

Using the module

For the use of the SM 322; DO 16 x DC24V/0.5A, the following hardware and software requirements must be fulfilled:

- For the central use in S7-300, the module can be used with all available CPUs.
- For the decentral use in ET 200M, the module can be used with the following IM 153-modules and compatible successor modules:
  - IM 153-2; as of 6ES7153-2BA02-0XB0, (PROFIBUS).
  - IM 153-2; as of 6ES7153-2BA82-0XB0; (PROFIBUS, OUTDOOR).
  - IM 153-4; as of 6ES7153-4BA0x-0XB0; (PROFINET).
- Requirement: STEP 7 V5.5 (HSP0217) or higher.
- A GSD file or a GSDML file must be used if the module is part of a distributed and controlled by a master produced by a third-party manufacturer. The corresponding file for the selected IM 153 is available for download from the Internet (http://www.siemens.com/automation/service&support).
- Module diagnosis and identification data (I&M) are available through STEP 7 and with SIMATIC PDM as of V6.0 + SP5 (HSP0217) or SIMATIC PDM V7.0 or higher and EDD for ET 200M "DP_IOSystem_Siemens_ET200M_Module.Device" as of V1.1.12.

Compatible use of the module 6ES7322-8BH0x-0AB0

You can repalce the digital output module 6ES7322-8BH**0x**-0AB0 without changing your settings through a digital output module 6ES7322-8B**10**-0AB0.

In this case, the module does not offer discrepancy failure monitoring.

If a STEP 7 version before STEP 7 V5.1 SP3 is used, the replacement value behavior will only be entered through the parameter dialog from HW config and transferred to the module during system startup.

In this case, all other settings must be transferred through SIMATIC PDM or in the user program through datasets to the module.

These settings are not saved retentively on the digital output module 6ES7322-8BH**10**-0AB0 and are reset after restarting the module.

Note

A setting through SIMATIC PDM is only possible with the use of a 6ES7322-8BH**10**-0AB0 as a replacement for a 6ES7322-8BH**0x**-0AB0 as long as the device label (6ES7322-8BH**0x**-0AB0) in SIMATIC PDM was not updated with the actual device label through Device -> Load in PC/PG.

Redundant use of the module

A redundant use of the module is only permissible if the 6ES7322-8BH**10**-0AB0 is used and configured for both modules. No short-circuit monitoring occurs according to L+ in redundant use.

Wiring and block diagrams

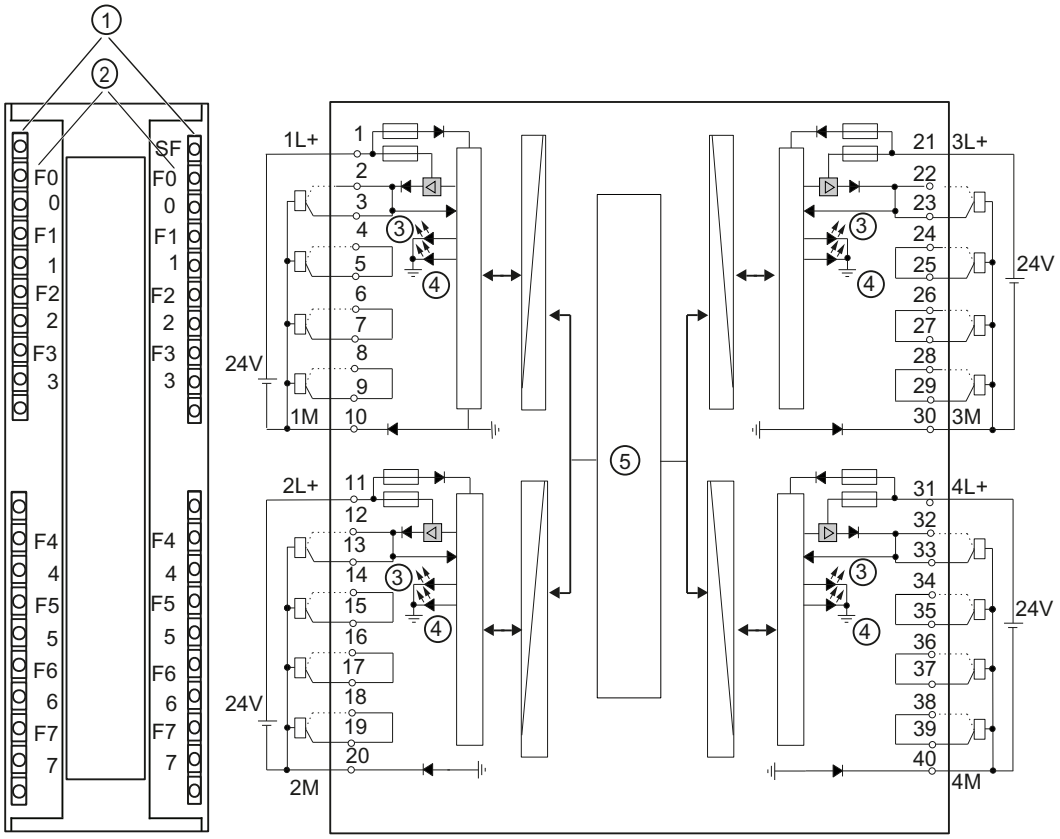

① Status displays - green
Error - red

② Channel numbers
Numbers 0 to 7 on the right side correspond to channel numbers 8 to 15

③ Channel status

④ Channel fault

⑤ Backplane bus interface

Redundant Output Signals

Two clamps are on each channel. Both connections are similar and can be used for a redundant control of an actuator. Redundant control can take place from 2 different modules without an external circuit. Both signal modules must be connected to the common reference potential M.

Technical specifications

Table 3- 21 Technical specifications SM 322; DO 16 x DC 24V/0.5A

Technical specifications	
Dimensions and Weight	
Dimensions W x H x D (mm)	40 x 125 x 120
Weight	approx. 300 g
Module-specific data	
Supports isochronous mode	No
Number of outputs	16
Cable length	
• Unshielded	Max. 600 m
• Shielded	Max. 1000 m
Voltages, Currents, Potentials	
Nominal load voltage L+	24 V DC
• Reverse polarity protection	Yes
Total current of outputs (per group)	
• Horizontal mounting position to 60 °C	Max. 2 A
• Vertical mounting position to 40 °C	Max. 2 A
Electrical isolation	
• Between channels and the backplane bus	Yes
• between channels in groups of	yes 4
Permissible potential difference	
• Between the various circuits	75 V DC, 60 V AC
Insolation tested with	DC 500 V
Power consumption	
• From the backplane bus	Max. 100 mA
• From load voltage L+ (without load)	Max. 100 mA
Power dissipation of the module	Typically 6 W
Status, Interrupts, Diagnostics	
Status LEDs	Green LED per channel
Interrupts	
• Diagnostic interrupt	Programmable
Diagnostic functions	Programmable
• Group error display	Red LED (SF)
• Channel error display	red LED, per channel
• Diagnostic information readable	supported

Technical specifications	
Actuator selection data	
Output voltage	
• "1" signal	Min. L + (- 0.7 V)
• "0" signal	0.7 mA * R_L (R_L = load resistance value) max. 31 V for R_L = infinite
Output current	
• At signal "1" Nominal value Permitted range	0.5 A 5 mA up to 600 mA
• "0" signal (residual current)	Max. 0.7mA
Output delay (with resistive load)	
• At "1" to "0"	Max. 2.7 ms (including module cycle time)
• At "1" to "0"	Max. 2.7 ms (including module cycle time)
Load resistor range	48 Ω bis 4kΩ
Lamp load	Max. 5 W
Connecting 2 outputs in parallel	
• For redundant triggering of a load	supported
• To increase performance	Not possible
Control of a digital input	supported
Operating frequency	
• With resistive load	Max. 100 Hz
• With inductive load, to IEC 947-5-1, DC 13	Max. 2 Hz
• With lamp load	Max. 10 Hz
Limit (internal) of the inductive circuit interruption voltage to	Typical L+ (-68 V)
Short-circuit of an output	Yes, electronic
• Response threshold	Typical 1.4 A

Load resistances of the actuators

The load resistances of the actuators must be in the range from 48 Ω to 4 Ω. For larger values, a suitable resistance must be switched directly on the connection clamps of the actuator (observe the maximum power loss with signal "1").

The permissible rated voltage of the actuator must be greater than 28.2 V.

The lower response threshold of the actuator must be known in the operating temperature range or be determined experimentally. The output voltage of the module with signal "0" can be influenced through parallel switching of a resistance directly on the actuator connection clamps. With the selection of the resistance, the maximum power loss with signal "1" must be observed.

- Load resistances between 10 kΩ and 1 MΩ can be reported as short-circuits after L+.
- Unwired outputs or loads greater than 1 MΩ are reporeted as "wire-break".

3.24.1 Parameters of digital output modules

Programming

For general information on programming digital modules, refer to the chapter Programming digital modules (Page 59).

The table below describes the programmable parameters of SM 322;
DO 16 x DC 24 V/0.5 A, including defaults.

Note

A setting of the module through SIMATIC PDM is not possible.

Table 3- 22 Setting for the digital output module SM 322; 6ES7322-8BH10-0AB0

Parameters	Value range	Default setting	Applicability
Diagnostics			
• Group diagnostics	Yes/no	no	Channel
• Load voltage L+ missing	Yes/no	No	Channel group
• Discrepancy error	Yes/no	No	Channel group
Diagnostics interrupt	yes/no	no	Module
Response at CPU-STOP	Substitute a value/ Keep last value	Substitute a value	Module
Substitute value	0/1	0	Channel

See also

Settings from the digital output module SM 322; DO 16 x DC 24 V/0.5 A (6ES7322-8BH10-0AB0) (Page 557)

3.24.2 Diagnosis of digital output modules

Introduction

General information in regards to the evaluation of the diagnosis messages can be found in the chapter Diagnosis of digital modules (Page 60) and the design and content of the individual bytes in the chapter Diagnosis data from the SM 322; DO 16 x DC24 V/0.5 A (6ES7322-8BH10-0AB0) (Page 616).

Channel errors are signaled with the channel error display (red LED per channel) and reported in the data record 1. As soon as at least one channel error display is lit, the group error display (SF) is also lit.

Module errors are signaled via the diagnostic data record 0/1 and only displayed via the the group error display (SF).

Group diagnostics

Through the "Group diagnositcs" setting, the message from the channel-specific fields, with the exception of "external load voltage L+", for "Setting error" and the recognition of a discrepancy error can be turned off.

Load voltage L+ missing

The approval of the channel diagnositcs "external load point L+" occurs in channel groups through the diagnostics setting "Missing load voltage L+". This means that if the load voltage fails, the error will be reported to all four channels of a channel group. Additionally, the module-specific message occurs in the byte 0 of the diagnostics dataset 0 / 1, "external auxiliary voltage missing". Even if the diagnostics of "Missing load voltage L+" is turned off for all channels/channel groups, the recognition within the module remains active. This means that if there is a failure of at least one load voltage, the module error will always be reported in the byte 0 of the diagnostics data set 0 / 1 "External auxiliary voltage missing".

Fuse blown

If a fuse is blown, it will always be reported to all four channels of a channel group. In addition to the channel message, there is always the module-specific message in the byte 3 of the diagnostics dataset 0 / 1 "Fuse defect". Even if the "Group diagnostics" setting is disabled by all channels, a defective fuse will always be reported as module error in the byte 3 of the diagnostics dataset 0 / 1 "Fuse defect".

Discrepancy error monitoring

For project engineering with the MLFB 6ES7322-8BH10-0AB0, the SM 322 DO 16 x DC24 V / 0.5A offers a discrepancy error monitoring.

The approval of the channel discrepancy error monitoring occurs in channel groups through the "Discrepancy error" diagnostics settings. With an approved discrepancy error monitoring, the module constantly checks the set and actual status of the corresponding digital outputs. With a recognized discrepancy, for example, due to a component defect on the digital module, the corresponding channel group will be turned off and the "Fuse defect" error will be reported to all affected channels in the channel group. After removal/insertion or restart of the module, the digital outputs will be reactivated and the discrepancy test runs again.

A discrepancy error is exclusively reported through the "Fuse defect" error. An additional indication through the byte 3 "Fuse defect" does not occur. Thus, a differentiation between the actual fuse blown and a discrepancy error is possible.

Description of the Diagnostic Evaluation

You can find a detailed description of how to evaluate diagnostic information in the STEP 7 online help.

3.24.3 Firmware update via HW Config

Introduction

The SM 322; DO 16 x DC 24V/0.5 A can be updated to the newest firmware version depending on the available compatible functional updates.

The most recent firmware versions are available from your Siemens representative or from the Internet (http://www.siemens.com/automation/service&support).

Preconditions / Requirements

- STEP 7 V5.5 +(HSP0217) or higher
- With a central use of the module in a S7-300, the firmware update must occur in the CPU-operating mode STOP. If the CPU is in the operating mode RUN, it may lead to unexpected behavior and the module is only available after a network off/network on.
- If the module is used in a distributed IO device ET 200M with active backplane bus modules (removal and insertion allowed), the a firmware update is also possible in the RUN CPU state.
- With a distributed use without active backplane bus modules, the firmware update is also possible in the RUN CPU state. Please observe that during the firmware update, the distributed IO device will be turned off shortly.

Firmware update

This is how you update the firmware of a central or distributed module:

1. Select the module SM 322; DO 16 x DC 24V/0.5 A in HW-config.
2. Select PLC > Update Firmware.
3. Use the "Browse" button to select the path to the firmware files (*.upd).
4. Click the "Run" button.
   – The module performs the firmware update.
5. You can find additional information in the STEP 7 Online Help.

Note

- During the firmware update, the OB 83 (alarm due to removing and inserting modules), the OB 85 (program execution error) and the OB 86 (error due to module rack failure) are opened. If the diagnostics alarm of the module is approved, the OB 82 (diagnostics alarm) will also be opened during the firmware update. Make sure that the OB is set correspondingly.
- If the red LED (SF) on the module blinks, an error occurred during the firmware update and the update must be repeated. In this case, the bootloader version Ex.x.x is displayed in the online diagnostics.
- A firmware update through HW-config is not permitted if the module is in redundant mode.

Identification of the firmware version

After the firmware update, you must label the firmware version on the module.

3.24.4 I&M identification data

Properties

I data: Information about the module, which is normally found on the module casing. I-data is write-protected. They include:

- Hardware release status
- Firmware release status
- Serial number

M data: System-dependent information (e.g. plant designation).

M data is created during configuration.

All identification data (I&M) is stored retentively in a module and supports you with the following tasks:

- Error search and repair in the system
- Testing the system configuration
- Finding changes to the system hardware.

The SM 322; DO 16 x DC 24V/0.5 A supports:

- I&M 0 (identification)
- I&M 1 (system identification / location identification)
- I&M 2 (installation date)
- I&M 3 (additional information)

Reading and writing the identification data with STEP 7

System-dependent information (M-data) is configured in the properties dialog of the module.

You obtain information on the module (I data) from the module status dialog. The system-dependent information on the module is displayed here too.

Note

Identification data can only be written for modules if the CPU is in the STOP operating mode.

Reading and writing the identification data with PDM

Through the "Identification" flap, the identification data is evaluated and transferred to the module. Location identification is not available in PDM.

Note

Identification data can only be written for modules if the CPU is in the STOP operating mode.

It is recommended to change at most one entry per download, if applicable, the transferring of the identification data must be activated multiple times.

3.25 Digital output module SM 322; DO 16 x DC 24 V/0.5 A High Speed; (6ES7322-1BH10-0AA0)

Order number

6ES7322-1BH10-0AA0

Properties

Properties of SM 322; DO 16 x DC 24 V/0.5 A High Speed:

- 16 outputs, electrically isolated in groups of 8
- Output current 0.5 A
- Rated load voltage 24 VDC
- Suitable for solenoid valves, DC contactors and signal lamps
- Supports isochronous mode

Use of the module with high-speed counters

Please note when using the module in combination with high-speed counters:

Note

When using a mechanical contact to switch on the 24-V power supply to SM 322; DO 16 x DC 24 V/0.5 A High Speed, its outputs will carry "1" signal for the duration of ca. 50 µs, due to the circuit structure.

Wiring and block diagrams of SM 322; DO 16 x DC 24 V/0.5 A High Speed

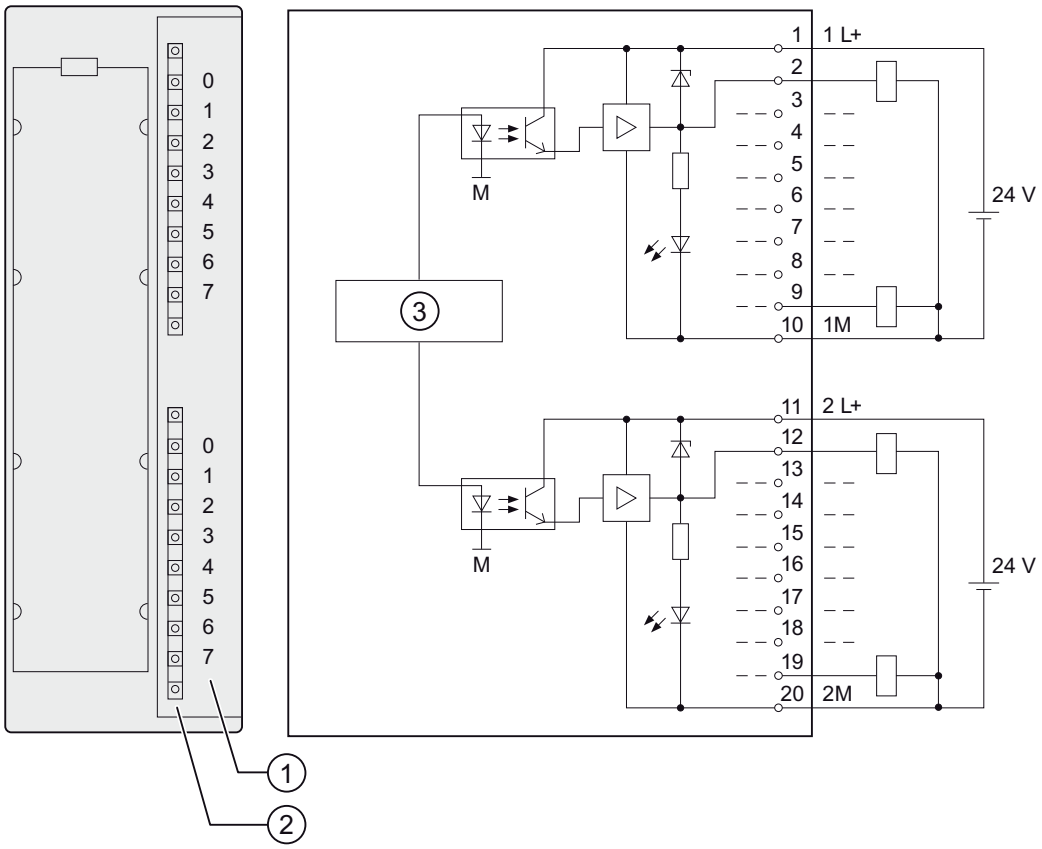

① Channel number
② Status display - green
③ Backplane bus interface

Technical specifications of SM 322; DO 16 x DC 24 V/0.5 A High Speed

Technical specifications	
Dimensions and weight	
Dimensions W x H x D (mm)	40 x 125 x 117
Weight	ca. 200 g
Module-specific data	
Supports isochronous mode	yes
Number of outputs	16
Cable length • unshielded • shielded	 max. 600 m max. 1000 m
Voltages, currents, electrical potentials	
Rated load voltage L+	24 VDC
Total current of outputs (per group)	
• horizontal mounting position to 40 °C to 60 °C	 max. 4 A max. 3 A
• vertical mounting position to 40 °C	max. 2 A
Electrical isolation	
• between channels and the backplane bus	yes
• between channels in groups of	yes 8
Maximum potential difference • between different circuits	 75 VDC / 60 VAC
Isolation test voltage	500 VDC
Current consumption • from the backplane bus • from load voltage L+ (no-load)	 max. 70 mA max. 110 mA
Power loss of the module	typ. 5 W
Status, interrupts, diagnostics	
Status display	green LED per channel
Interrupts	none
Diagnostic functions	none
Actuator selection data	
Output voltage • "1" signal	min. L + (- 0.8 V)

Technical specifications	
Output current	
• "1" signal Rated value Permitted range	 0.5 A 5 mA to 0.6 A
• "0" signal (residual current)	Max. 0.5 mA
Output delay (resistive load)	
• "0" to "1" transition	max. 100 µs
• "1" to "0" transition	max. 200 µs
Internal module cycle time between the backplane bus and the output driver input	
• "0" to "1" transition	0.1 µs to 20 µs
• "1" to "0" transition	0.1 µs to 20 µs
Load resistance range	48 Ω to 4 kΩ
Lamp load	max. 5 W
Wiring two outputs in parallel	
• For redundant load control	Supported (only outputs of the same group)
• For performance increase	Not supported
Control of a digital input	Supported
Switching frequency	
• with resistive load	max. 1000 Hz
• with inductive load to IEC 947-5-1, DC 13	max. 0.5 Hz
• with lamp load	max. 10 Hz
Internal limiting of the inductive shutdown voltage to	typ. L + (-53 V)
Short-circuit protection of the output	yes, electronic
• Threshold	typ. 1 A
Wiring of the actuators	using a 20-pin front connector

3.26 Digital output module SM 322; DO 16 x UC 24/48 V; (6ES7322-5GH00-0AB0)

Order number

6ES7322-5GH00-0AB0

Properties

Performance features of the SM 322; DO 16 x UC24/48 V digital output module:

- 16 electrically isolated semiconductor relay outputs
- Electrical isolation between channels of 120 V
- Switching characteristics: R_{DS} ON is typically 0.25 Ohm, and R_{DS} OFF is typically greater than 100 GOhm
- Designed for load voltages up to 48 V AC or DC, no minimum load voltage
- Designed for output loads up to 0.5 A, no minimum load current
- Outputs are fully independent and support any wiring configuration
- Set substitution values or "Hold last values" can be programmed at the outputs for CPU STOP.
- The module supports diagnostics of programming errors and of external power failure
- Suitable for AC solenoids, actuators, motor starters, FHP motors and signal lamps
- Supports parameter reassignment in RUN

Wiring and block diagrams of SM 322; DO 16 x UC 24/48 V

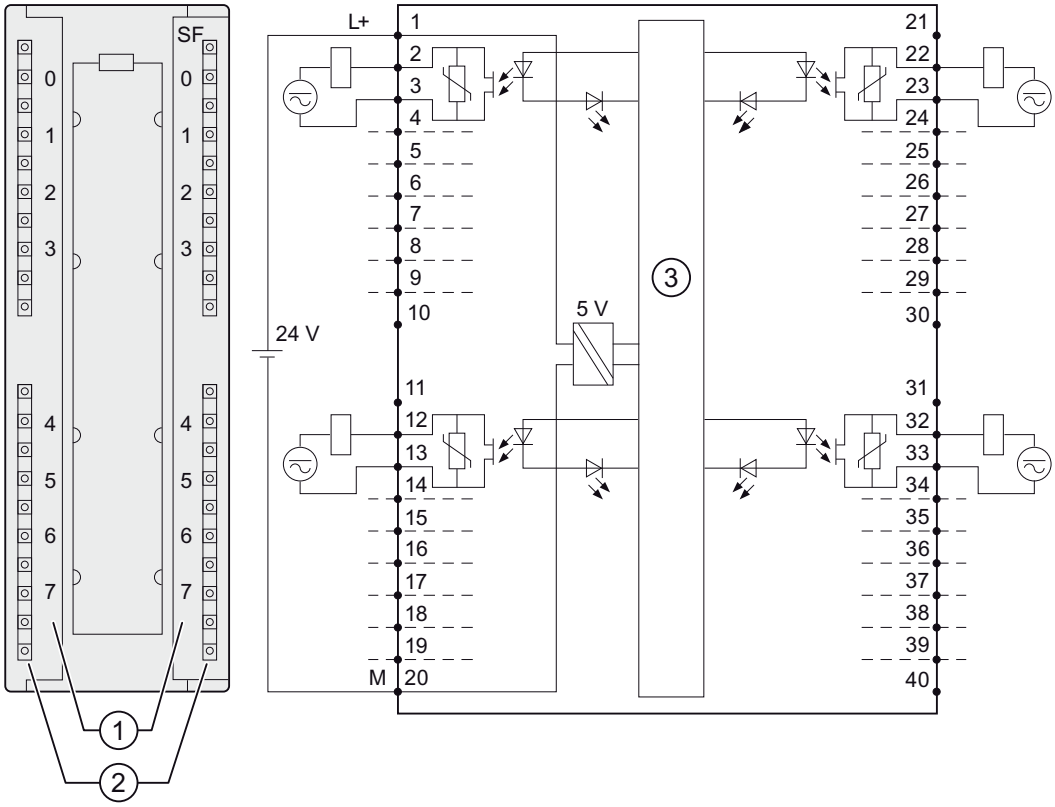

① Channel number
② Status LEDs - green
③ Backplane bus interface

Technical specifications of SM 322; DO 16 x UC 24/48 V

Dimensions and weight	
Dimensions W x H x D (mm)	40 x 125 x 117
Weight	ca. 260 g
Module-specific data	
Supports parameter reassignment in RUN	Yes
• Reaction of non-programmed outputs	Return the output value which was valid before the parameterization
Supports isochronous mode	no
Number of outputs	16
Cable length • unshielded • shielded	 max. 600 m max. 1000 m
Voltages, currents, electrical potentials	
Rated electronics supply voltage L +	24 VDC
• Reverse polarity protection • Power failure buffering	yes min. 5 ms
Total current of outputs (per group)	
• horizontal mounting position up to 60 °C	max. 0.5 A
• other mounting positions to 40 °C	max. 0.5 A
Cumulated current of outputs (per module)	
• horizontal mounting position to 60 °C	max. 8 A
• other mounting positions to 40 °C	max. 8 A
Electrical isolation	
• between channels and the backplane bus	yes
• between channels and electronics power supply	yes
• between channels in groups of	yes 1
Maximum potential difference	
• between channels and the backplane bus	170 VDC, 120 VAC
• between channels and electronics power supply	170 VDC, 120 VAC
• between outputs of different groups	170 VDC, 120 VAC
Isolation test voltage	
• between channels and the backplane bus	1500 VAC
• between channels and electronics power supply	1500 VAC

Dimensions and weight	
• between outputs of different groups	1500 VAC
Current consumption	
• from the backplane bus • from supply voltage L+	max. 100 mA max. 200 mA
Power loss of the module	typ. 2.8 W
Status, interrupts, diagnostics	
Status display	green LED per channel
Diagnostic functions	
• Group error display	red LED (SF)
Interrupts	
• Diagnostic interrupt • Reading diagnostics information	programmable supported
Actuator selection data	
Output voltage	
• "1" signal	min. L+ (-0.25 V)
Output current	
• Rated inrush current (per group) with "1" signal • "0" signal (residual current)	0.5 A max. 1.5 A (max. 50 ms) max. 10 µA
Output delay (resistive load)	
• "0" to "1" transition • "1" to "0" transition	max. 6 ms max. 3 ms
External fuse for relay outputs	Fuse, I^2t :1 A^2s, fast-blow fuse*
Lamp load	max. 2.5 W
Internal parallel wiring of 2 outputs	Varistor, 85 V
• for redundant load control • for performance increase	supported not supported
Control of a digital input	supported
Switching frequency	
• with resistive load	max. 10 Hz
• with inductive load to IEC 947-5-1; DC 12 AC/12	max. 0.5 Hz
• with lamp load	max. 0.5 Hz
Wiring of the actuators	using a 40pin front connector

* Outputs must be protected by a 250 V fast-blow fuse (recommended fuses: Wickman 194-1100 1.1 A and Littlefuse 0217-800 V 800 mA.)

When mounted in a hazardous area to National Electric Code (NEC), always remove the fuse when the module is outside of the potentially explosive atmosphere, and use a suitable tool.

3.26.1 Parameters of digital output module SM 322 DO 16 x UC24/48 V

Programming

The tables below show data record numbers for static and dynamic parameters.

Table 3- 23 Data record 0 (static parameters):

Parameters	Comment
Enable diagnostics	Enabling an interrupt as a reaction to module failure caused by faulty parameter, hardware error, or voltage error.

Table 3- 24 Data record 1 (dynamic parameters):

Parameters	Comment
Reaction to CPU STOP	
Hold last value	
Substitute value output	
Substitute value	
Substitute value	Each bit represents an output

This module supports fail state/substitution value outputs when the CPU changes from RUN to STOP.

Status displays

Each output of this module is equipped with a green LED to indicate the relay state. In addition, a red LED (SF) indicates the diagnostics status of the module.

Diagnostics, troubleshooting

Diagnostics data are assigned according to the technical data listed below.

The four system diagnostics data bytes can be read in the additional interrupt information as data record 0, or in the first 4 bytes of data record 1.

Structure of the data record and system diagnostics for SM 322 DO 16x UC 24/48V

Structure of data record 1:

Table 3- 25 Structure of the data record for SM 322 DO 16 x UC 24/48 V

Data record 1 byte address	Available information	Contents
0..3	System-specific diagnostics data	4 bytes

System diagnostics for SM 322;DO 16 x UC24/48 V:

Table 3- 26 System diagnostics for SM 322 DO 16 x UC 24/48 V

System diagnostics byte 1:		Technical data
D0:	Module fault	yes
D1:	Internal fault	yes
D2:	External fault	yes
D3:	Channel fault	no
D4:	External auxiliary voltage missing	yes
D5:	Front connector missing	no
D6:	Module not programmed	yes
D7:	Incorrect parameters	yes
System diagnostics byte 2:		
D0..D3:	Module class	1111
D4:	Channel information available	no
D5:	User information available	no
D6:	Diagnostics interrupt from substitute	no
D7:	Reserve	
System diagnostics byte 3:		
D0:	Wrong/missing memory module	no
D1:	Communication error	no
D2:	RUN/STOP operating state	no
D3:	Watchdog timeout	yes
D4:	Internal power failure	no
D5:	Battery 1 low	no
D6:	Backup system failure	no
D7:	Reserve	
System diagnostics byte 4:		
D0:	Rack failure	no
D1:	Processor failure	yes
D2:	EPROM fault	yes
D3:	RAM fault	yes
D4:	DAC error	no
D5:	Fuse blown	no
D6:	Process interrupt lost	no
D7:	Reserve	

3.27 Digital output module SM 322; DO 16 x AC 120/230 V/1 A; (6ES7322-1FH00-0AA0)

Order number

6ES7322-1FH00-0AA0

Properties

Properties of digital output module SM 322; DO 16 x AC120/230 V/1 A:

- 16 outputs, fused and electrically isolated in groups of 8
- Output current 1 A
- Rated load voltage 120/230 VAC
- Suitable for AC solenoids, actuators, motor starters, FHP motors and signal lamps

Wiring and block diagram of SM 322 DO 16 x AC120/230 V/1 A

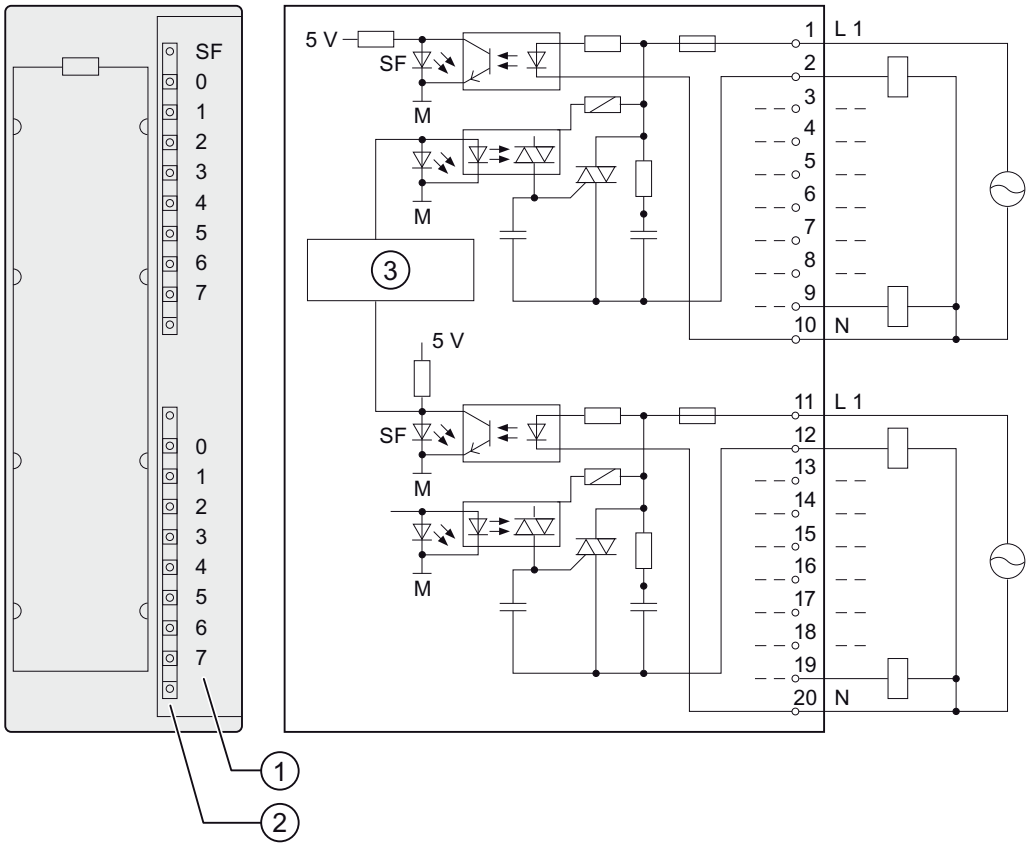

① Channel number
② Status LEDs - green
Error LED - red
③ Backplane bus interface

SM 322; DO 16 x AC 120/230 V/1 A - Technical specifications

Technical specifications	
Dimensions and weight	
Dimensions W x H x D	40 x 125 x 117
Weight	ca. 275 g
Module-specific data	
Supports isochronous mode	No
Number of outputs	16
Cable length • unshielded • shielded	 max. 600 m max. 1000 m
Voltages, currents, electrical potentials	
Load voltage L1 All load voltages must be connected to the same phase	120/230 VAC
Total current of outputs (per group)	
• horizontal mounting position to 40 °C to 60 °C	 max. 4 A max. 2 A
• vertical mounting position to 40 °C	max. 2 A
Electrical isolation	
• between channels and the backplane bus	yes
• between channels in groups of	yes 8
Maximum potential difference • between $M_{internal}$ and outputs	 230 VAC
• between outputs of different groups	500 VAC
Isolation test voltage	4000 VDC
Current consumption • from the backplane bus • from load voltage L+ (no-load)	 max. 200 mA max. 2 mA
Power loss of the module	typ. 8.6 W
Status, interrupts, diagnostics	
Status display	green LED per channel
Interrupts • Diagnostic interrupt	 no
Diagnostic functions • Group error display	red LED (SF) (fuse or no L1/N)

Technical specifications	
Actuator selection data	
Output voltage • "1" signal – At maximum current – At minimum current	 min. L 1 (- 1.5 V) min. L 1 (- 8.5 V)
Output current	
• "1" signal Rated value Permitted range at 0 °C to 40 °C Permitted range at 0°C to 60°C Maximum inrush current (per group)	 1 A 10 mA to 1 A 10 mA to 0.5 A 20 A (two half-waves)
• with "0" signal (residual current)	max. 2 mA
Blocking voltage	max. 60 V
Zero transition	
Size of the motor starter	max. size 4 to NEMA
Lamp load	max. 50 W
Wiring two outputs in parallel	
• for redundant load control	supported (only outputs of the same group)
• for performance increase	no
Control of a digital input	supported
Switching frequency	
• with resistive load • with inductive load to IEC 947-5-1, AC 15	max. 10 Hz max. 0.5 Hz
• with lamp load	max. 1 Hz
Short-circuit protection of the output	Fuse 8 A, 250 V; per group
• Fuse-tripping current	min. 40 A
• Response time	max. 300 ms
Replacement fuses	8 A fuse, fast-blowing
• Wickman • Schurter • Littlefuse	19 194-8 A SP001.1014 217.008
Fuse holder	
• Wickman	19 653
Wiring of the actuators	using a 20-pin front connector

3.28 Digital output module SM 322; DO 8 x DC 24 V/2 A; (6ES7322-1BF01-0AA0)

Order number

6ES7322-1BF01-0AA0

Properties

Properties of SM 322; DO 8 x DC 24 V/2 A:

- 8 outputs, electrically isolated in groups of 4
- Output current 2 A
- Rated load voltage 24 VDC
- Suitable for solenoid valves, DC contactors and signal lamps

Use of the module with high-speed counters

Please note when using the module in combination with high-speed counters:

Note

When using a mechanical contact to switch on the 24-V power supply to SM 322; DO 8 x DC 24 V/2 A, the module outputs will carry a "1" signal for the duration of ca. 50 µs due to the circuit structure.

Wiring and block diagram of SM 322; DO 8 x DC 24 V/2 A

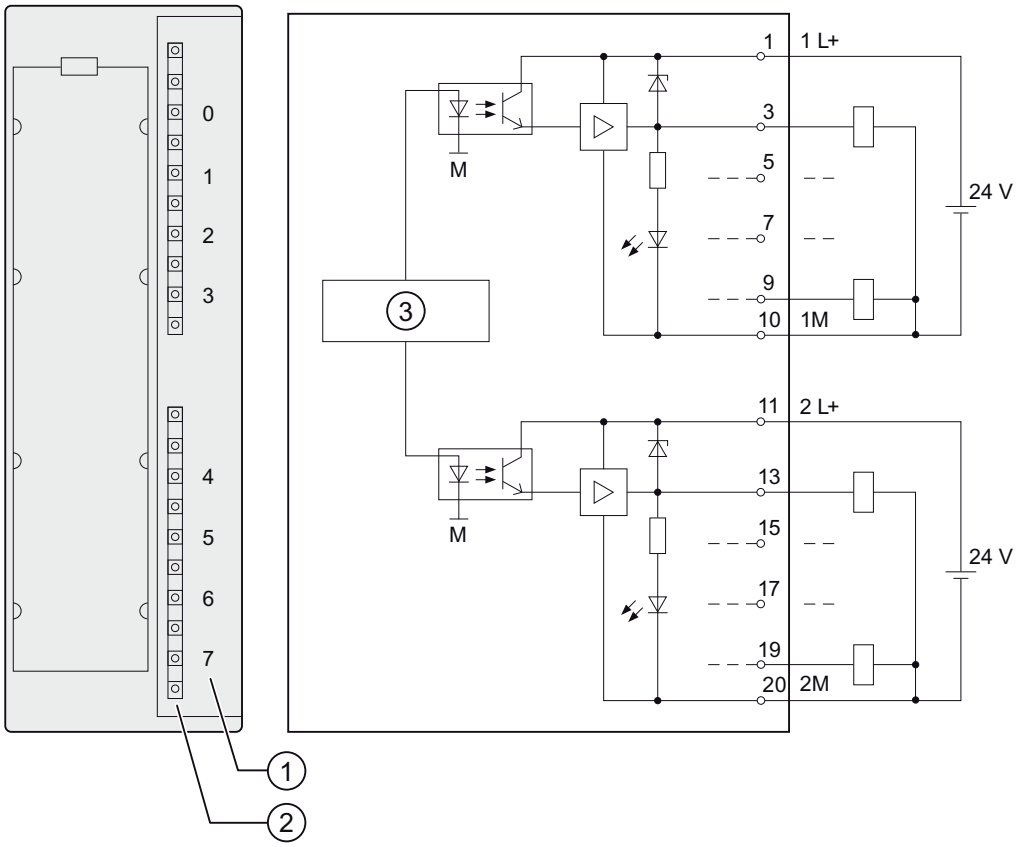

① Channel number
② Status display - green
③ Backplane bus interface

SM 322; DO 8 x DC 24 V/2 A - Technical specifications

Technical specifications	
Dimensions and weight	
Dimensions W x H x D (mm)	40 x 125 x 117
Weight	ca. 190 g
Module-specific data	
Supports isochronous mode	no
Number of outputs	8
Cable length • unshielded • shielded	 max. 600 m max. 1000 m
Voltages, currents, electrical potentials	
Rated load voltage L+	24 VDC
Total current of outputs (per group)	
• horizontal mounting position to 60 °C	max. 4 A
• vertical mounting position to 40 °C	max. 4 A
Electrical isolation	
• between channels and the backplane bus	yes
• between channels in groups of	yes 4
Maximum potential difference • between different circuits	 75 VDC / 60 VAC
Isolation test voltage	500 VDC
Current consumption • from the backplane bus • from load voltage L+ (no-load)	 max. 40 mA max. 60 mA
Power loss of the module	typ. 6.8 W
Status, interrupts, diagnostics	
Status display	green LED per channel
Interrupts	none
Diagnostic functions	none
Actuator selection data	
Output voltage • "1" signal	min. L+ (- 0.8 V)

Technical specifications	
Output current	
• "1" signal Rated value Permitted range	 2 A 5 mA to 2.4 A
• with "0" signal (residual current)	max. 0.5 mA
Output delay (with resistance load)	
• "0" to "1" transition	max. 100 µs
• "1" to "0" transition	max. 500 µs
Load resistance range	12 Ω to 4 kΩ
Lamp load	max. 10 W
Wiring two outputs in parallel	
• for redundant load control	supported (only outputs of the same group)
• for performance increase	not supported
Control of a digital input	supported
Switching frequency	
• with resistive load	max. 100 Hz
• with inductive load to IEC 947-5-1, DC 13	max. 0.5 Hz
• with lamp load	max. 10 Hz
Internal limiting of the inductive shutdown voltage to	typ. L + (-48 V)
Short-circuit protection of the output	yes, electronic
• Threshold	typ. 3 A
Wiring of the actuators	using a 20-pin front connector

3.29 Digital output module SM 322; DO 8 x DC 24 V/ 0.5 A; with diagnostics interrupt; (6ES7322-8BF00-0AB0)

Order number: "Standard module"

6ES7322-8BF00-0AB0

Order number: "SIPLUS S7-300 module"

6AG1322-8BF00-2AB0

Properties

Properties of SM 322; DO 8 x DC 24 V/0.5 A:

- 8 outputs, electrically isolated in groups of 8
- Output current 0.5 A
- Rated load voltage 24 VDC
- Suitable for solenoid valves, DC contactors and signal lamps
- 2 terminals per output
  - Output without series diode
  - Output with series diode (for redundant load control)
- Group error display (SF)
- Channel-specific status and error LEDs
- Programmable diagnostics
- Programmable diagnostic interrupt
- Programmable substitute value output
- Supports parameter reassignment in RUN

Wiring and block diagram of SM 322; DO 8 x DC 24 V/ 0.5 A

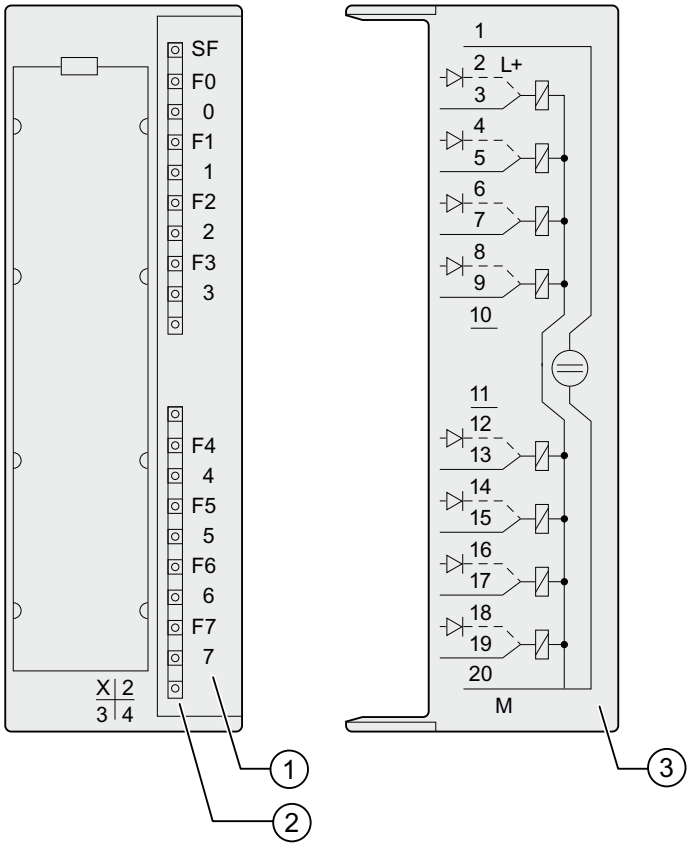

① Channel number, channel error (F)

② Status display - green
Error LED - red

③ Wiring diagram

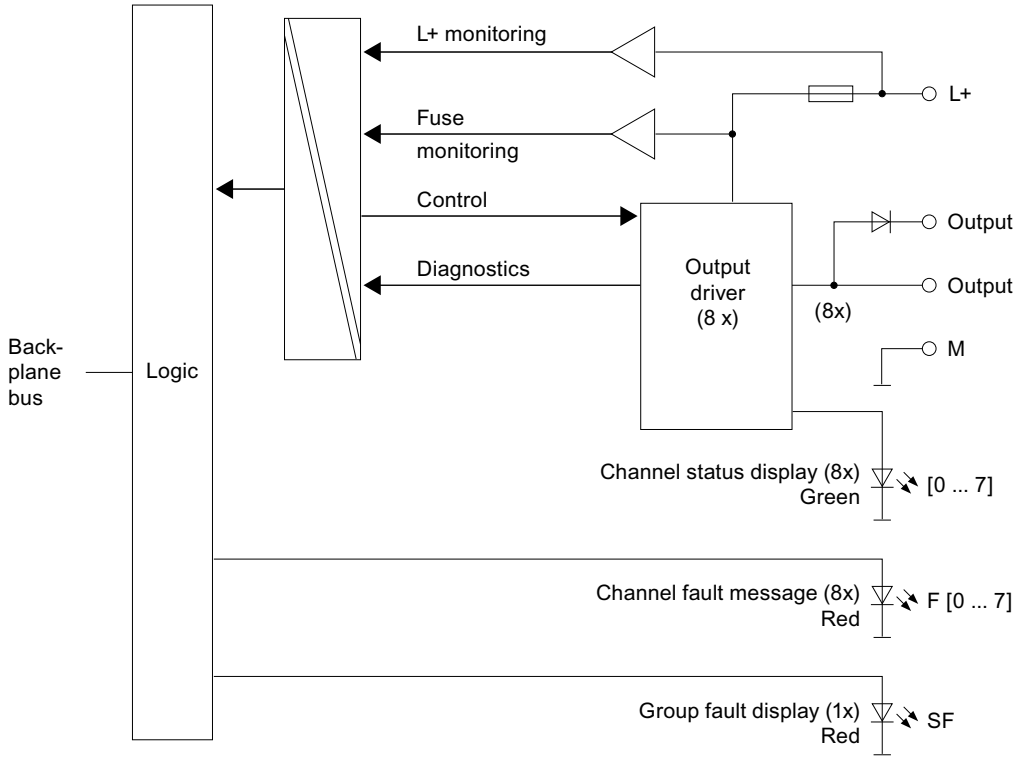

Figure 3-9 Block diagram of SM 322; DO 8 x DC 24 V/0.5 A

Redundant load control

The output with series diode can be used for redundant load control. Redundant control without external circuitry is possible using two different signal modules. Both modules must be connected to the common reference potential M.

Note

It is not possible to detect external short-circuits to L+ at output with series diode.

SM 322; DO 8 x DC 24 V/0.5 A - Technical specifications

Technical specifications	
Dimensions and weight	
Dimensions W x H x D (mm)	40 x 125 x 117
Weight	ca. 210 g
Module-specific data	
Supports parameter reassignment in RUN	Yes
• Reaction of non-programmed outputs	Return the output value which was valid before the parameterization
Supports isochronous mode	no
Number of outputs	8
Cable length • unshielded • shielded	 max. 600 m max. 1000 m
Voltages, currents, electrical potentials	
Rated load voltage L+	24 VDC
Total current (per group) of outputs without series diode	
• horizontal mounting position to 40 °C to 60 °C	 max. 4 A max. 3 A
• vertical mounting position to 40 °C	max. 4 A
Total current of outputs (per group) with series diode	
• horizontal mounting position to 40 °C to 60 °C	 max. 3 A max. 2 A
• vertical mounting position to 40 °C	max. 3 A
Electrical isolation • between channels and the backplane bus	 yes
• between channels in groups of	yes 8
Maximum potential difference • between different circuits	 75 VDC / 60 VAC
Isolation test voltage	500 VDC
Current consumption • from the backplane bus • from load voltage L+ (no-load)	 max. 70 mA max. 90 mA
Power loss of the module	typ. 5 W

Technical specifications	
Status, interrupts, diagnostics	
Status display	green LED per channel
Interrupts • Diagnostic interrupt	programmable
Diagnostic functions • Group error display • Channel error display (F) • Reading diagnostics data	programmable red LED (SF) red LED (F) per channel supported
Actuator selection data	
Output voltage • "1" signal without series diode with series diode	 min. L + (- 0.8 V) min. L+ (-1.6 V)
Output current	
• "1" signal Rated value Permitted range	 0.5 A 10 mA to 0.6 A[1)]
• "0" signal (residual current)	max. 0.5 mA
Output delay (resistive load) • "0" to "1" transition • "1" to "0" transition	 max. 180 µs max. 245 µs
Load resistance range	48 Ω to 3 kΩ
Lamp load	max. 5 W
Wiring two outputs in parallel	
• for redundant load control	Only outputs with series diode and common reference potential
• for performance increase	not supported
Control of a digital input	supported 1 binary input to IEC 61131, Type 2; Type 1, with disabled wire-break monitoring
Switching frequency • with resistive load • with inductive load to IEC 947-5-1, DC 13 • with lamp load	 max. 100 Hz max. 2 Hz max. 10 Hz
Internal limiting of the inductive shutdown voltage to	typ. L + (-45 V)
Short-circuit protection of the output	yes, electronic
• Threshold	typ. 0.75 A to 1.5 A
Wiring of the actuators	using a 20-pin front connector
1) 5 mA to 0.6 A, with disabled wire-break monitoring	

3.29.1 SM 322; DO 8 x DC 24 V/0.5 A - Parameters

Programming

The general procedure of programming digital modules is described in the chapter Programming digital modules (Page 59).

SM 322; DO 8 x DC 24 V/0.5 A - Parameters

The table below lists the programmable parameters of SM 322; DO 8 x DC 24 V/0.5 A, including defaults.

The defaults apply if you have not set any parameters in **STEP 7**.

Table 3- 27 Parameters of SM 322; DO 8 x DC 24 V/0.5 A

Parameters	Range of values	Default	Parameter type	Scope
Enable • Diagnostics interrupt	yes/no	no	dynamic	Module
Reaction to CPU STOP	Set substitute value (SSV) Hold last value (HLV)	SSV		
Diagnostics • Wirebreak • No load voltage L • Short-circuit to M • Short-circuit to L	yes/no yes/no yes/no yes/no	no no no no	static	Channel
Set substitute value "1"	yes/no	no	dynamic	Channel

3.29.2 SM 322; DO 8 x DC 24 V/0.5 A - Diagnostics

Diagnostics messages of SM 322; DO 8 x DC 24 V/0.5 A

The table provides an overview of the diagnostic messages of SM 322; DO 8 x DC 24 V/0.5 A

Table 3- 28 Diagnostics messages of SM 322; DO 8 x DC 24 V/0.5 A

Diagnostics message	LED	Scope of diagnostics	programmable
Wire-break*	SF	Channel	yes
Load voltage missing	SF	Channel	yes
Short-circuit to M	SF	Channel	yes
Short-circuit to L+	SF	Channel	yes
External auxiliary voltage missing	SF	Module	no
Internal auxiliary voltage missing	SF	Module	no
Fuse blown	SF	Module	no
Watchdog time-out	SF	Module	no
EPROM fault	SF	Module	no
RAM fault	SF	Module	no
* The module detects a wire-break at a current < 1 mA. If configured accordingly, the SF LED and corresponding channel error LED light up when a wire-break is detected.			

Note

Prerequisite for the detection of errors indicated by programmable diagnostic messages is an appropriate configuration of the digital module in *STEP 7*.

Causes of error and troubleshooting

Table 3- 29 Diagnostic messages of SM 322; DO 8 x DC 24 V/0.5 A, causes of error and troubleshooting

Diagnostics message	Error detection condition ...	Possible cause of error	To correct or avoid error
Wirebreak	Only when output = "1"	Wire-break between the module and actuator	Connect the cable
		Channel not connected (open)	Disable the "wire-break diagnostics" parameter for the channel in *STEP 7*
Load voltage missing	Only when output = "1"	Defective output	Replace the module
Short-circuit to M	Only when output = "1"	Overload at output	Eliminate overload
		Short-circuit of output to M	Eliminate the short-circuit
Short-circuit to L+	generally	Short-circuit at output to L+ of the module power supply	Eliminate the short-circuit
External auxiliary voltage missing	generally	Power supply L+ to module missing	Feed supply L+
Internal auxiliary voltage missing	generally	Power supply L+ to module missing	Feed supply L+
		Fuse blown in module	Replace the module
Fuse blown	generally	Fuse blown in module	Replace the module
Watchdog timeout	generally	Infrequent high electromagnetic interference	Eliminate the interference
		Defective module	Replace the module
EPROM fault	generally	Infrequent high electromagnetic interference	Eliminate interference and cycle the power supply of CPU off/on.
		Defective module	Replace the module
RAM fault	generally	Infrequent high electromagnetic interference	Eliminate interference and cycle the power supply of CPU off/on.
		Defective module	Replace the module

3.29.3 SM 322; DO 8 x DC 24 V/0.5 A - Behavior

Influence of the operating state and supply voltage on output values

The output values of SM 322; DO 8 x DC 24V/0.5 A are determined by the CPU's operating state and the module's power supply.

Table 3- 30 Influence of the CPU operating state and of the supply voltage L+ of SM 322; DO 8 24 VDC/0.5 A on output values.

CPU operating state		Power supply L+ at digital module	Output value of the digital module
POWER ON	RUN	L+ present	CPU value
		L+ missing	0 signal
	STOP	L+ present	Substitute value/last value (default = 0 signal)
		L+ missing	0 signal
POWER OFF	-	L+ present	0 signal
		L+ missing	0 signal

Reaction to power failure

Failure of the power supply to SM 322; DO 8 x DC 24V/0.5 A is always indicated at the module's SF LED. This information is also available on the module (entry in diagnostics data.)

Triggering of diagnostics interrupts is determined by the parameter settings (see the next chapter Interrupts of SM 322; DO 8 x DC 24/0.5 A (Page 192)).

See also

SM 322; DO 8 x DC 24 V/0.5 A - Parameters (Page 188)

3.29.4 SM 322; DO 8 x DC 24 V/0.5 A - Interrupts

Introduction

The SM 322; DO 8 x DC 24 V/0.5 A can trigger diagnostic interrupts.

For detailed information on the OBs and SFCs mentioned below, refer to the *STEP 7* Online Help.

Enabling interrupts

There is no default interrupt setting, i.e. interrupts are disabled if parameters are not set accordingly. Program the interrupt enable parameter in **STEP 7**.

Diagnostics interrupt

Incoming error events (initial occurrence) and outgoing error events (error is cleared) are reported by means of diagnostics interrupt, if this interrupt is enabled.

The CPU interrupts user program execution in order to process diagnostics interrupt OB82.

You can call SFC51 or 59 in OB82 in the user program to view detailed diagnostics data output by the module.

Diagnostics data remain consistent until the program exits OB82. The module acknowledges the diagnostics interrupt when the program exits OB82.

See also

SM 322; DO 8 x DC 24 V/0.5 A - Parameters (Page 188)

3.30 Digital output module SM 322; DO 8 x DC 48-125 V/1.5 A; (6ES7322-1CF00-0AA0)

Order number: "Standard module"

6ES7322-1CF00-0AA0

Order number: "SIPLUS S7-300 module"

6AG1322-1CF00-2AA0

Properties

Properties of SM 322; DO 8 x DC 48-125 V/1.5 A:

- 8 outputs, with reverse polarity protection, and electrically isolated in groups of 4
- Output current 1.5 A
- Rated load voltage 48 VDC to 125 VDC
- Suitable for solenoid valves, DC contactors and signal lamps
- Group error display (SF)

Use of the module with high-speed counters

Please note when using the module in combination with high-speed counters:

Note

When using a mechanical contact to switch on the power supply, the outputs of SM 322; DO 8 x DC 48-125 V/1.5 A will carry a "1" signal for the duration of ca. 50 µs due to the circuit structure.

Wiring and block diagrams of SM 322; DO 8 x DC 48-125 V/1.5 A

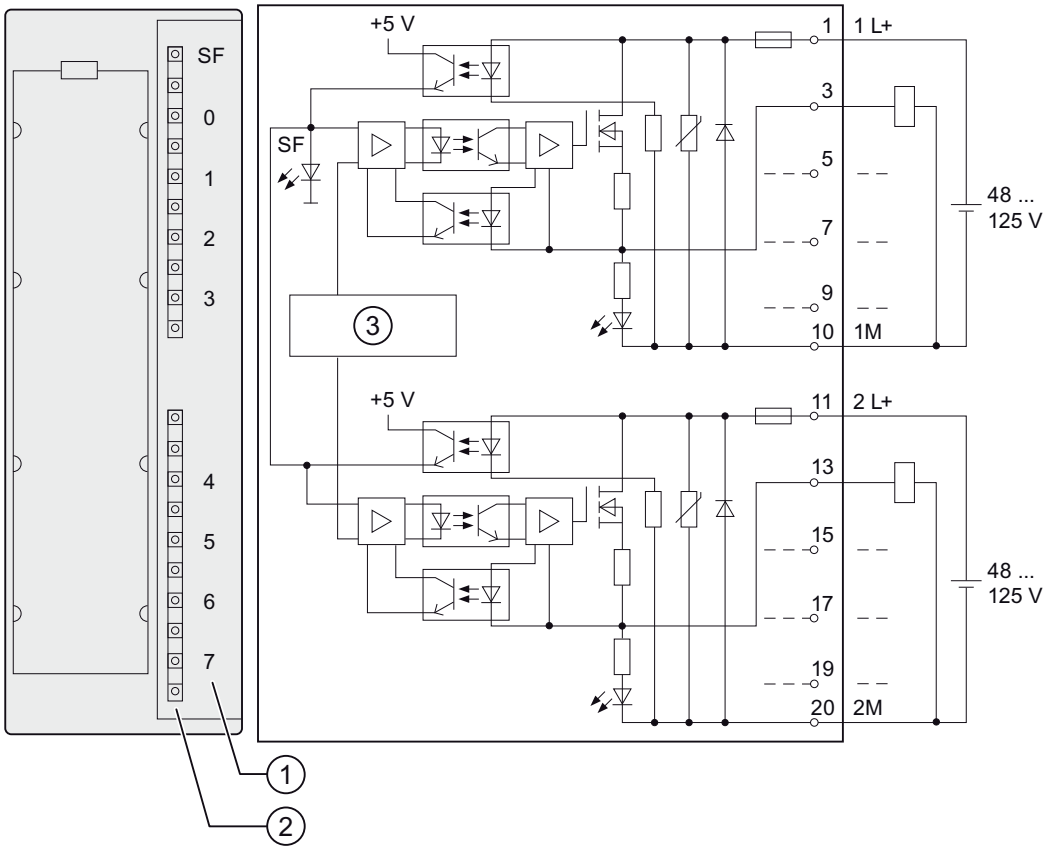

① Channel number
② Status display - green
Error LED - red
③ Backplane bus interface

Technical specifications of M 322; DO 8 x DC 48-125 V/1.5 A

Technical specifications	
Dimensions and weight	
Dimensions W x H x D (mm)	40 x 125 x 117
Weight	ca. 250 g
Module-specific data	
Supports isochronous mode	no
Number of outputs	8
Cable length • unshielded • shielded	 max. 600 m max. 1000 m
Voltages, currents, electrical potentials	
Rated load voltage L+	48 VDC to 125 VDC
• Reverse polarity protection	yes, by fusing[1)]
Total current of outputs (per group)	
• horizontal mounting position to 40 °C to 50 °C to 60 °C	 max. 6 A max. 4 A max. 3 A
• vertical mounting position to 40 °C	max. 4 A
Electrical isolation • between channels and the backplane bus	yes
• between channels in groups of	yes 4
Maximum potential difference • between different circuits	 146 VDC / 132 VAC
Isolation test voltage	1500 VAC
Current consumption • from the backplane bus • from load voltage L+ (no-load)	 max. 100 mA max. 2 mA
Power loss of the module	typ. 7.2 W
Status, interrupts, diagnostics	
Status display	green LED per channel
Interrupts	none
Diagnostic functions • Group error display	 red LED (SF) [2)]

Technical specifications	
Actuator selection data	
Output voltage • "1" signal	 min. L+ (-1.2 V)
Output current • "1" signal Rated value Permitted range	 1.5 A 10 mA to 1.5 A
• Permitted surge current	max. 3 A for a duration of 10 ms
• with "0" signal (residual current)	max. 0.5 mA
Output delay (resistive load)	
• "0" to "1" transition • "1" to "0" transition	max. 2 ms max. 15 ms
Lamp load	max. 15 W at 48 V max. 40 W at 125 V
Wiring two outputs in parallel	
• for redundant load control	supported (only outputs of the same group)
• for performance increase	not supported
Control of a digital input	supported
Switching frequency • with resistive load • with inductive load • with lamp load	 max. 25 Hz max. 0.5 Hz max. 10 Hz
Internal limiting of the inductive shutdown voltage to	typ. M (-1V)
Short-circuit protection of the output • Threshold	yes, electronic[3)] typ. 4.4 A
Replacement fuses	Fuse 6.3 A/250 V, fast-blow, 5 x 20 mm
• Schurter • Wickman	SP0001.1012 194-1630-0
Fuse holder • Wickman	 653 0000 040
Wiring of the actuators	using a 20-pin front connector

1) Fuses on this module are only supplementary. External surge current protection (suitable for tap circuits conforming to local regulations for electrical engineering) is required in the supply lines of the load circuit.

2) Possible errors:

- no load voltage
- defective fuse
- output overload

3) If an overload condition is detected, the output is disabled for the duration of ca. 2.4 s.

3.31 Digital output module SM 322;DO 8 x AC 120/230 V/2 A; (6ES7322-1FF01-0AA0)

Order number: "Standard module"

6ES7322-1FF01-0AA0

Order number: "SIPLUS S7-300 module"

6AG1322-1FF01-2AA0

Properties

Properties of SM 322; DO 8 x AC 120/230 V/2 A:

- 8 outputs, fused and electrically isolated in groups of 4
- Output current 2 A
- Rated load voltage 120/230 VAC
- Suitable for AC solenoid valves, contactors, motor starters, FHP motors and signal lamps.
- Group error display (SF)

Wiring and block diagram of SM 322; DO 8 x AC 120/230 V/2 A

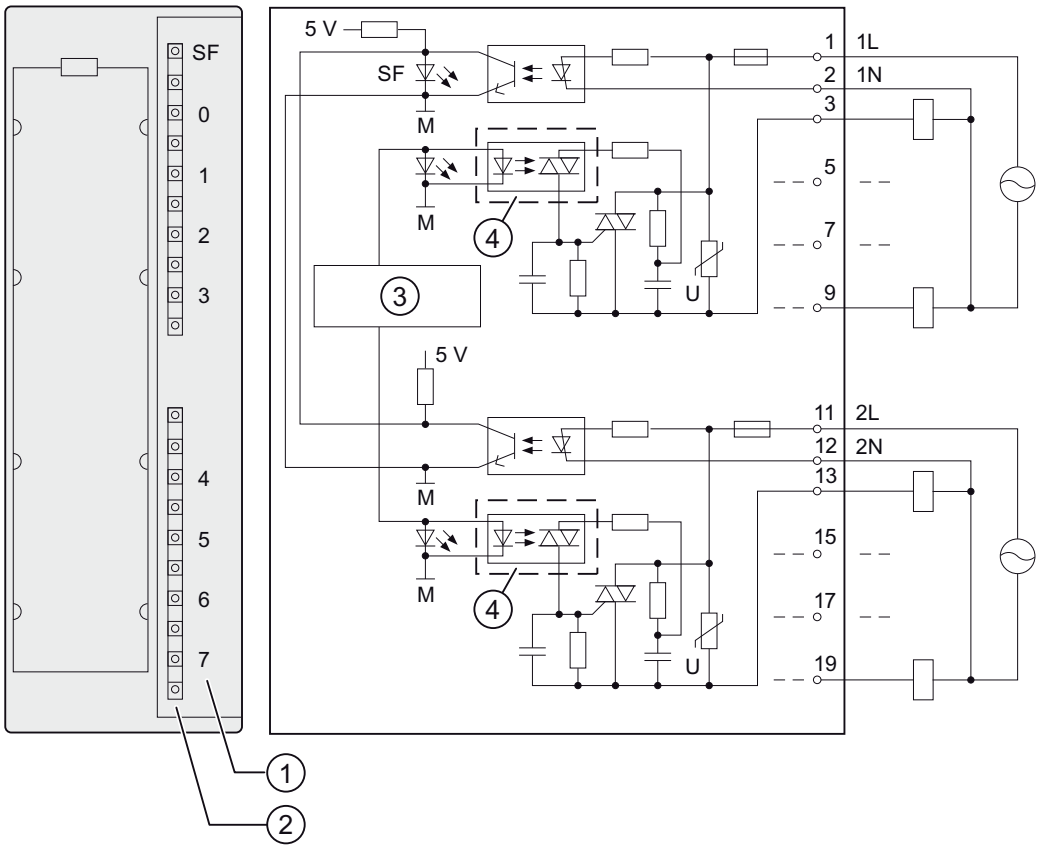

① Channel number
② Status display - green
Error LED - red
③ Backplane bus interface
④ Optotriac

SM 322; DO 8 x AC 120/230 V/2 A - Technical specifications

Technical specifications	
Dimensions and weight	
Dimensions W x H x D (mm)	40 x 125 x 117
Weight	ca. 275 g
Module-specific data	
Supports isochronous mode	no
Number of outputs	8
Cable length • unshielded • shielded	 max. 600 m max. 1000 m
Voltages, currents, electrical potentials	
Rated load voltage L1 • Maximum frequency range	120/230 VAC 47 Hz to 63 Hz
Total current of outputs (per group)	
• horizontal mounting position to 40 °C to 60 °C	 max. 4 A max. 2 A
• vertical mounting position to 40 °C	 max. 2 A
Electrical isolation • between channels and the backplane bus • between channels in groups of	 yes yes 4
Maximum potential difference	
• between $M_{internal}$ and outputs	230 VAC
• between outputs of different groups	500 VAC
Isolation test voltage	1500 VAC
Current consumption • from the backplane bus • from load voltage L1 (no-load)	 max. 100 mA max. 2 mA
Power loss of the module	typ. 8.6 W
Status, interrupts, diagnostics	
Status display	green LED per channel
Interrupts	none
Diagnostic functions • Group error display	yes red LED (SF) 2)

Technical specifications	
Actuator selection data	
Output voltage • "1" signal – At maximum current – At minimum current	 min. L1 (-1.5 V) min. L1 (-8.5 V)
Output current • "1" signal Rated value permissible range at 0 °C to 40 °C permissible range at 40 °C to 60 °C Maximum inrush current (per group)	 AC 2 A[1)] 10 mA to 2 A 10 mA to 1 A max. 20 A (max. 1 AC cycle)
• "0" signal (residual current)	max. 2 mA
Output delay (resistive load)	
• "0" to "1" transition	max. 1 AC cycle
• "1" to "0" transition	max. 1 AC cycle
Minimum load current	10 mA
Zero transition	max. 60 V
Size of the motor starter	max. size 5 to NEMA
Lamp load	max. 50 W
Wiring two outputs in parallel	
• for redundant load control	supported (only outputs of the same group)
• for performance increase	not supported
Control of a digital input	supported
Switching frequency • with resistive load • with inductive load to IEC 947-5-1, AC 15 • with lamp load	 max. 10 Hz max. 0.5 Hz max. 1 Hz
Short-circuit protection of the output	Fuse, 8 A/250 V; per group
• Fuse-tripping current	min. 40 A
• Response time	max. 300 ms
Replacement fuses • Wickman • Schurter • Littlefuse	8 A fuse/fast-blow 194-1800-0 SP001.1013 217.008

Technical specifications	
Fuse holder • Wickman	653 07
Wiring of the actuators	using a 20-pin front connector

1) The load current must not be half-wave

2) Possible errors:

- no load voltage

- defective fuse

3.32 Digital output module SM 322; DO 8 x AC 120/230 V/2 A ISOL (6ES7322-5FF00-0AB0)

Order number

6ES7322-5FF00-0AB0

Properties

Properties of digital output module SM 322; DO 8 x AC 120/230 V/2 A ISOL:

- 8 outputs, electrically isolated
- Group error display
- Channelspecific status LEDs
- Configurable diagnostics
- Programmable diagnostic interrupt
- Programmable substitute value output
- Output current 2 A
- Rated load voltage 120/230 VAC
- Suitable for AC solenoid valves, contactors, motor starters, FHP motors and signal lamps
- Supports parameter reassignment in RUN

Wiring and block diagrams of SM 322; DO 8 x AC 120/230 V/2 A ISOL

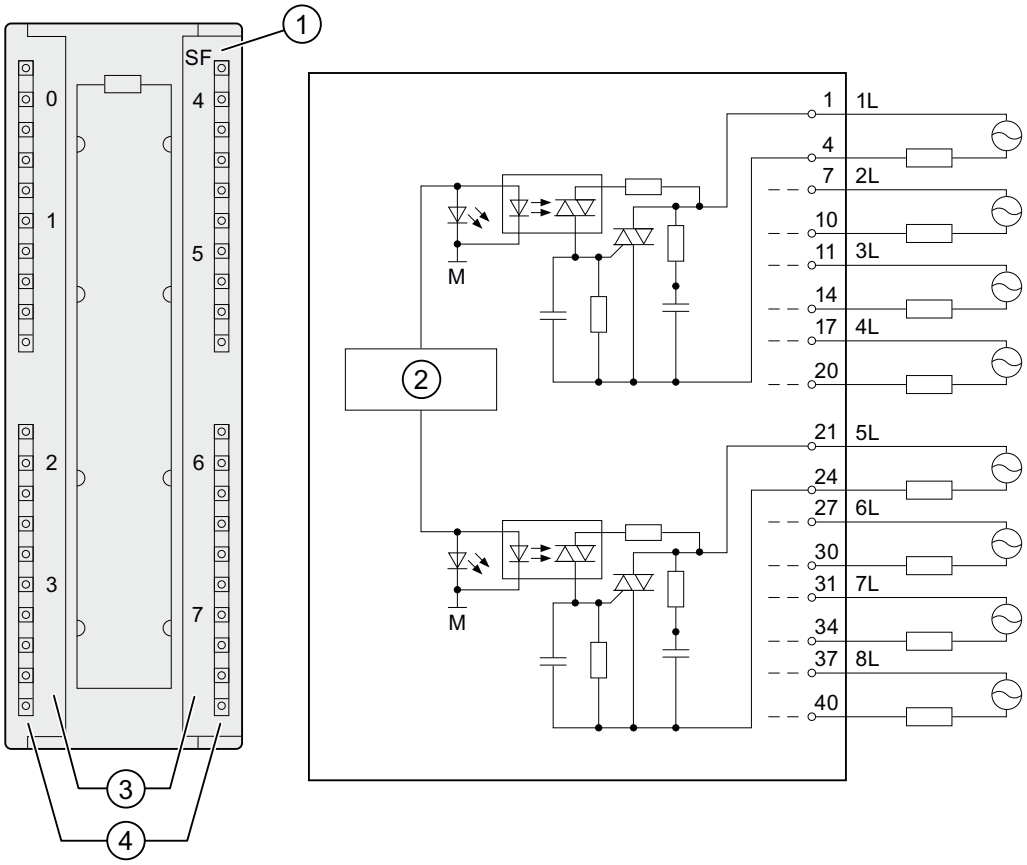

① Group error display - red
② Backplane bus interface
③ Channel number
④ Status display - green

SM 322; DO 8 x AC 120/230 V/2 A ISOL - Technical specifications

Technical specifications	
Dimensions and weight	
Dimensions W x H x D	40 x 125 x 117
Weight	approx. 275 g
Module-specific data	
Supports parameter reassignment in RUN	Yes
• Reaction of non-programmed outputs	Return the output value which was valid before the parameterization
Supports isochronous mode	No
Number of outputs	8
Cable length • unshielded • shielded	 max. 600 m max. 1000 m
Voltages, currents, electrical potentials	
Rated load voltage L1	120/230 VAC
Total current of outputs (module)	
• Horizontal mounting position to 40 °C to 60 °C	 max. 8 A max. 4 A
• vertical mounting position to 40 °C	max. 4 A
Electrical isolation	
• between channels and the backplane bus	yes
• between channels in groups of	yes 1
Maximum potential difference	
• between $M_{internal}$ and outputs	230 VAC
• between outputs	500 VAC
Isolation test voltage	
• between $M_{internal}$ and outputs	1500 VAC
• between outputs of different groups	2000 VAC
Current consumption	
• from the backplane bus • from load voltage L1 (no-load)	max. 100 mA max. 2 mA
Power loss of the module	typ. 8.6 W

Technical specifications	
Status, interrupts, diagnostics	
Status display	green LED per channel
Interrupts • Diagnostic interrupt	programmable
Diagnostic functions • Group error display	red LED (SF)
Actuator selection data	
Output voltage • "1" signal – At maximum current – At minimum current	 min. L1 (-1.5 V) min L1 (-8.5 V)
Output current	
• "1" signal Rated value permissible range at 0 °C to 40 °C permissible range at 40 °C to 60 °C Maximum inrush current (per group)	 2 A 10 mA to 2 A 10 mA to 1 A 20 A (with two half-waves)
• "0" signal (residual current)	max. 2 mA
Zero transition	max. 60 V
Size of the motor starter	max. size 5 to NEMA
Lamp load	max. 50 W
Wiring two outputs in parallel	
• for redundant load control	supported
• for performance increase	not supported
Control of a digital input	supported
Switching frequency	
• with resistive load	max. 10 Hz
• with inductive load to IEC 947-5-1, AC 15	max. 0.5 Hz
• with lamp load	max. 1 Hz
Short circuit-proof output	yes, 3.15 A / 250 V fuse, fast-blow
Wiring of the actuators	Using a 40-pin front connector

Note

The outputs must be protected by a high-speed, fast-blow 3.15 A 250 VAC fuse. Hazardous areas to National Electric Code must be determined safe before you remove/replace the fuse. Removal and replacement may only be possible using a suitable tool.

3.32.1 Parameters of SM 322; DO 8 x AC 120/230 V/2 A ISOL

Parameters of SM 322; DO 8 x AC 120/230 V/2 A ISOL

The table below lists the configurable parameters of SM 322; DO 8 x AC120/230 V/2 A ISOL, including defaults.

The defaults apply if you have not set any parameters in *STEP 7*.

Table 3- 31 Parameters of SM 322; DO 8 x AC 120/230 V/2 A ISOL

Parameters	Range of values	Defaults	Parameter type	Scope
Enable • Diagnostic interrupts	yes/no	no	dynamic	Module
Reaction to CPU STOP	Set substitute value (SSV) Hold last value (HLV)	SSV	dynamic	Channel
Set substitute value "1"	yes/no	no	dynamic	Channel

Programming

For detailed information on parameters of the digital output module, refer to the appendix Settings for the digital output modules (Page 555).

See also

Programming digital modules (Page 59)

3.32.2 SM 322; DO 8 x AC 120/230 V/2 A ISOL - Diagnostics

Diagnostic messages of SM 322; DO 8 x AC 120/230 V/2 A ISOL

The table below provides an overview of the diagnostic messages of SM 322; DO 8 x 120/230 VAC/2 A ISOL.

Table 3- 32 Diagnostic messages of SM 322; DO 8 x AC 120/230 V/2 A ISOL

Diagnostics message	LED	Scope of diagnostics	programmable
Watchdog timeout	SF	Module	no
EPROM fault	SF	Module	no
RAM fault	SF	Module	no

Causes of error and troubleshooting

The following table shows the diagnostic messages of SM 322; DO 8 x AC 120/230V/2 A ISOL, causes of error and troubleshooting.

Table 3- 33 Diagnostic messages of SM 322; DO 8 x AC 120/230V/2 A ISOL, error causes and troubleshooting

Diagnostics message	Error detection	Possible cause of error	To correct or avoid errors
Watchdog timeout	Always	Transient high electromagnetic interference	Eliminate interference and cycle the CPU power supply off and on
		Defective module	Replace the module
EPROM fault	Always	Transient high electromagnetic interference	Eliminate interference and cycle the CPU power supply off and on
		Defective module	Replace the module
RAM fault	Always	Transient high electromagnetic interference	Eliminate interference and cycle the CPU power supply off and on
		Defective module	Replace the module

3.32.3 SM 322; DO 8 x AC 120/230 V/2 A ISOL - Interrupts

Introduction

The SM 322; DO 8 x AC 120/230 V/2 A ISOL can trigger diagnostic interrupts.

For detailed information on the OBs and SFCs mentioned below, refer to the *STEP 7* Online Help.

Enabling interrupts

There is no default interrupt setting, i.e. interrupts are disabled if not set accordingly. Program the interrupt enable parameter in **STEP 7**.

Diagnostic interrupt

When diagnostic interrupts are enabled, incoming error events (initial occurrence) and outgoing error events (error is cleared) are reported by means of interrupt.

The CPU interrupts user program execution in order to process diagnostics interrupt OB82.

You can call SFC51 or 59 in OB82 in the user program to obtain detailed diagnostics data from the module.

Diagnostics data remain consistent until the program exits OB82. The module acknowledges the diagnostic interrupt when the program exits OB82.

Load restrictions in horizontal mounting position

In horizontal mounting position, the module loads must be restricted so that two adjacent inputs or outputs do not exceed their rated load.

Load restrictions in vertical mounting position

In vertical mounting position, the module loads must be restricted so that four adjacent inputs or outputs do not exceed their rated load.

3.33 Relay output module SM 322; DO 16 x Rel. AC 120/230 V; (6ES7322-1HH01-0AA0)

Order number

6ES7322-1HH01-0AA0

Properties

Properties of SM 322; DO 16 x Rel. AC 120/230 V:

- 16 outputs, electrically isolated in groups of 8
- Load voltage 24 VDC to 120 VDC; 24 VAC to 230 VAC
- Suitable for AC/DC solenoid valves, contactors, motor starters, FHP motors and signal lamps.

Reaction to a shutdown of the power supply

Note

The internal 200-ms buffer capacitance discharges sufficient power after power off to allow the user program to set a defined relay state.

Wiring and block diagrams of SM 322; DO 16 x Rel. AC 120/230 V

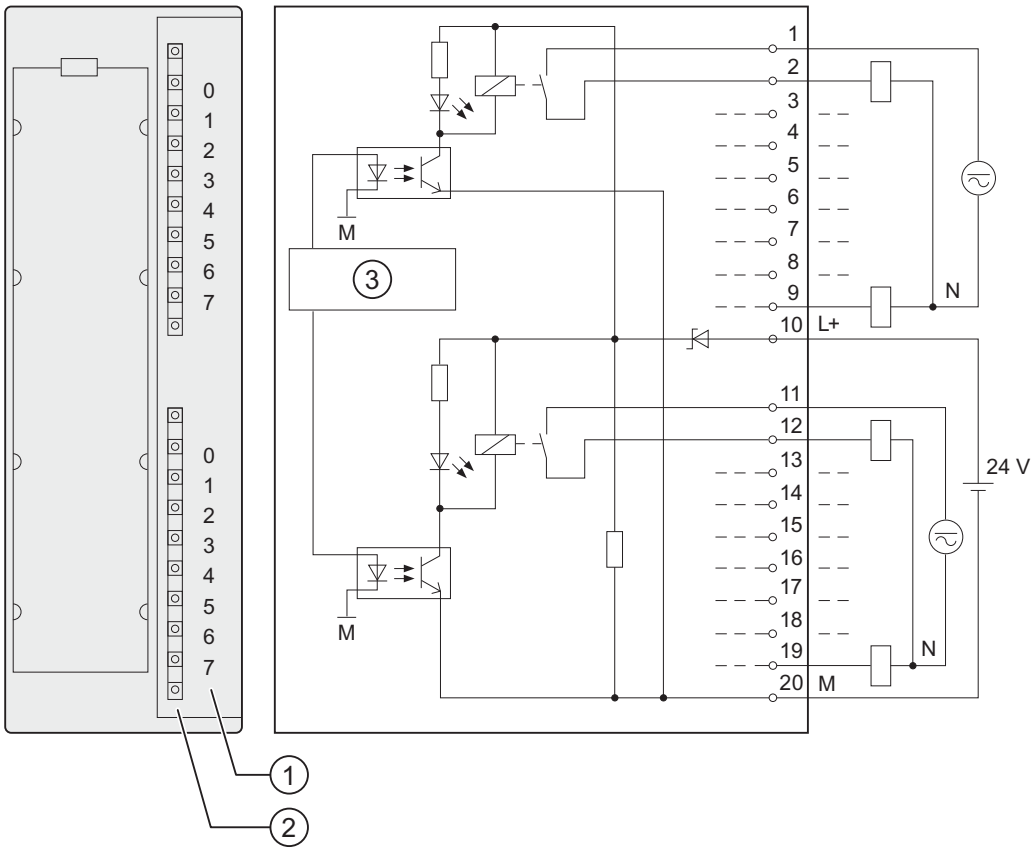

① Channel number
② Status display - green
③ Backplane bus interface

Technical specifications of SM 322; DO 16 x Rel. AC 120/230 V

Technical specifications	
Dimensions and weight	
Dimensions W x H x D (mm)	40 x 125 x 117
Weight	ca. 250 g
Module-specific data	
Supports isochronous mode	no
Number of outputs	16
Cable length • unshielded • shielded	 max. 600 m max. 1000 m
Voltages, currents, electrical potentials	
Rated power supply L+ to the relays	24 VDC
Total current of outputs (per group)	max. 8 A
Electrical isolation	
• between channels and the backplane bus	yes
• between channels in groups of	yes 8
Maximum potential difference	
• Between $M_{internal}$ and the power supply to relays	75 VDC/60 VAC
• Between $M_{internal}$ and the power supply to relays and outputs	230 VAC
• Between outputs of different groups	500 VAC
Isolation test voltage	
• between $M_{internal}$ and the power supply to relays	500 VDC
• between $M_{internal}$ and the power supply to relays and outputs	1500 VAC
• between outputs of different groups	2000 VAC
Current consumption • from the backplane bus • from power supply L+	 max. 100 mA max. 250 mA
Power loss of the module	typ. 4.5 W
Status, interrupts, diagnostics	
Status display	green LED per channel
Interrupts	none
Diagnostic functions	none
Actuator selection data	
Thermal current, continuous	max. 2 A
Minimum load voltage / current	10 V / 10 mA
Short-circuit current to IEC 947-5-1	200 A, with B10/B16 circuit breaker

Technical specifications		
Switching capacity and service life of contacts		
• with resistive load		
Voltage	Current	Number of switching cycles (typ.)
24 VDC	2.0 A	0.1 million
	1.0 A	0.2 million
	0.5 A	1.0 million
60 VDC	0.5 A	0.2 million
120 VDC	0.2 A	0.6 million
24 VAC	1.5 A	1.5 million
48 VAC	1.5 A	1.5 million
60 VAC	1.5 A	1.5 million
120 VAC	2.0 A	1.0 million
	1.0 A	1.5 million
	0.5 A	2.0 million
230 VAC	2.0 A	1.0 million
	1.0 A	1.5 million
	0.5 A	2.0 million
• with inductive load to IEC 947-5-1 DC13/AC15		
Voltage	Current	Number of switching cycles (typ.)
24 VDC	2.0 A	0.05 million
	1.0 A	0.1 million
	0.5 A	0.5 million
DC 60 V	0.5 A	0.1 million
DC 120 V	0.2 A	0.3 million
24 VAC	1.5 A	1 million
AC 48 V	1.5 A	1 million
AC 60 V	1.5 A	1 million
AC 120 V	2.0 A	0.7 million
	1.0 A	1.0 million
	0.5 A	1.5 million
230 VAC	2.0 A	0.7 million
	1.0 A	1.0 million
	0.5 A	1.5 million
An external protective circuit will increase the service life of contacts.		
Size of the motor starter	max. size 5 to NEMA	
Lamp load	50 W / 230 VAC 5 W / 24 VDC	
Contact protection (internal)	none	
Wiring two outputs in parallel		
• for redundant load control	supported (only outputs of the same group)	
• for performance increase	not supported	
Control of a digital input	supported	

Technical specifications	
Switching frequency	
• Mechanical	max. 10 Hz
• with resistive load	max. 1 Hz
• with inductive load to IEC 947-5-1, DC13/AC15	max. 0.5 Hz
• with lamp load	max. 1 Hz
Wiring of the actuators	using a 20-pin front connector

3.34 Relay output module SM 322; DO 8 x Rel. AC 230 V; (6ES7322-1HF01-0AA0)

Order number

6ES7322-1HF01-0AA0

Properties

Properties of SM 322; DO 8 x Rel. AC 230 V

- 8 outputs, electrically isolated in groups of 2
- Rated load voltage 24 VDC to 120 VDC, 48 VAC to 230 VAC
- Suitable for AC/DC solenoid valves, contactors, motor starters, FHP motors and signal lamps.

Reaction to a shutdown of the power supply

Note

Rule for SM 322; DO 8 x Rel. AC 230 V release version 1: The internal backup capacitor provides power for the duration of ca. 200 ms. This backup time is sufficient to briefly control the relay in the user program.

Wiring and block diagrams of SM 322; DO 8 x Rel. AC 230 V

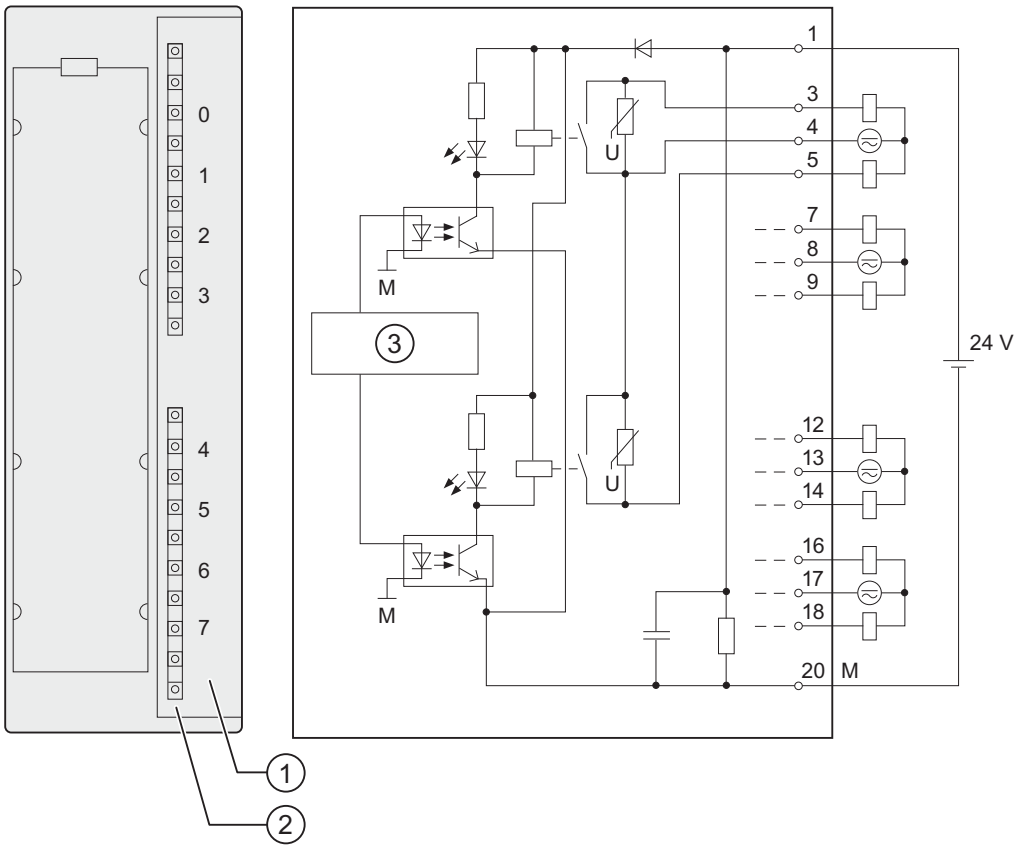

① Channel number
② Status display - green
③ Backplane bus interface

SM 322; DO 8 x Rel. AC 230 V - Technical specifications

Technical specifications	
Dimensions and weight	
Dimensions W x H x D (mm)	40 x 125 x 117
Weight	ca. 190 g
Module-specific data	
Supports isochronous mode	no
Number of outputs	8
Cable length • unshielded • shielded	 max. 600 m max. 1000 m
Voltages, currents, electrical potentials	
Rated power supply L+ to the relays	24 VDC
Total current of outputs (per group)	max. 4 A
Electrical isolation	
• between channels and the backplane bus	yes
• between channels in groups of	yes 2
Maximum potential difference	
• Between $M_{internal}$ and the power supply to relays	75 VDC/60 VAC
• Between $M_{internal}$ and the power supply to relays and outputs	230 VAC
• Between outputs of different groups	500 VAC
Isolation test voltage	
• between $M_{internal}$ and the power supply to relays	500 VDC
• between $M_{internal}$ and the power supply to relays and outputs	2000 VAC
• between outputs of different groups	2000 VAC
Current consumption • from the backplane bus • from power supply L+	 max. 40 mA max. 160 mA
Power loss of the module	typ. 3.2 W
Status, interrupts, diagnostics	
Status display	green LED per channel
Interrupts	none
Diagnostic functions	none

Technical specifications		
Actuator selection data		
Thermal current, continuous	max. 3 A	
Minimum load voltage / current	10 V / 5 mA	
Short circuit-proof to IEC 947-5-1 [2]	With circuit-breaker, characteristics B, for: cos Φ 1.0: 600 A cos Φ 0.5...0.7: 900 A With 8 A Diazed fuse: 1000 A	
Switching capacity and useful life of contacts		
• with resistive load		
Voltage	Current	Number of switching cycles (typ.)
24 VDC	2.0 A	0.7 million
	1.0 A	1.6 million
	0.5 A	4 million
60 VDC	0.5 A	1.6 million
120 VDC	0.2 A	1.6 million
48 VAC	2.0 A	1.6 million
60 VAC	2.0 A	1.2 million
120 VAC	2.0 A	0.5 million [2]
	1.0 A	0.7 million [2]
	0.5 A	1.5 million [2]
230 VAC	2.0 A	0.5 million [2]
	1.0 A	0.7 million [2]
	0.5 A	1.5 million
• with inductive load to IEC 947-5-1 DC13/AC15		
Voltage	Current	Number of switching cycles (typ.)
24 VDC	2.0 A	0.3 million
	1.0 A	0.5 million
	0.5 A	1.0 million
60 VDC	0.5 A	0.5 million
	0.2 A	0.3 million [2]
120 VDC	1.5 A	1 million
48 VAC	1.5 A	1 million
60 VAC	2.0 A	0.2 million
120 VAC	1.0 A	0.7 million
	0.7 A	1 million
	0.5 A	2.0 million
230 VAC	2.0 A	0.3 million [2]
	1.0 A	0.7 million [2]
	0.5 A	2 million [2]
Contact protection (internal)	Varistor SIOV-CU4032 K275 G	
An external protective circuit extends the useful life of contacts.		

Technical specifications		
Actuator selection data [continued]		
Lamp load 1)	max. 50 W	
	Power	Number of switching cycles (typ.)
Lamp load (230 VAC) 2)	700 W 1500 W	25000 10000
Energy-saving lamps/fluorescent lamps with electronic ballast2)	10 x 58 W	25000
Fluorescent lamps, conventionally compensated 2)	1 x 58 W	25000
Fluorescent lamps, non-compensated 2)	10 x 58 W	25000
Wiring two outputs in parallel		
• for redundant load control	supported (only outputs of the same group)	
• for performance increase	not supported	
Control of a digital input	supported	
Switching frequency • Mechanical	max. 10 Hz	
• with resistive load	max. 2 Hz	
• with inductive load to IEC 947-5-1, DC13/AC15	max. 0.5 Hz	
• with lamp load	max. 2 Hz	
Wiring of the actuators	using a 20-pin front connector	

1) Product version 1

2) Product version 2 or higher

3.35 Relay output module SM 322; DO 8 x Rel. 230VAC/5A; (6ES7322-5HF00-0AB0)

Order number

6ES7322-5HF00-0AB0

Properties

Properties of relay output module SM 322; DO 8 x Rel. AC 230V/5A:

- 8 outputs, electrically isolated
- Load voltage 24 VDC to 120 VDC, 24 VAC to 230 VAC
- Suitable for AC solenoid valves, contactors, motor starters, FHP motors and signal lamps
- You can protect the contacts with an RC quenching element by setting a jumper (SJ.)
- Group error display
- Channel-specific status displays
- Programmable diagnostic interrupt
- Programmable substitute value output
- Supports parameter reassignment in RUN

Overvoltage protection of contacts

You can protect the contacts against overvoltage by bridging (SJ) the module terminals 3 and 4, 7 and 8, 12 and 13 etc. (see the diagram below).

Wiring and block diagrams of SM 322; DO 8 x Rel. AC 230V/5A

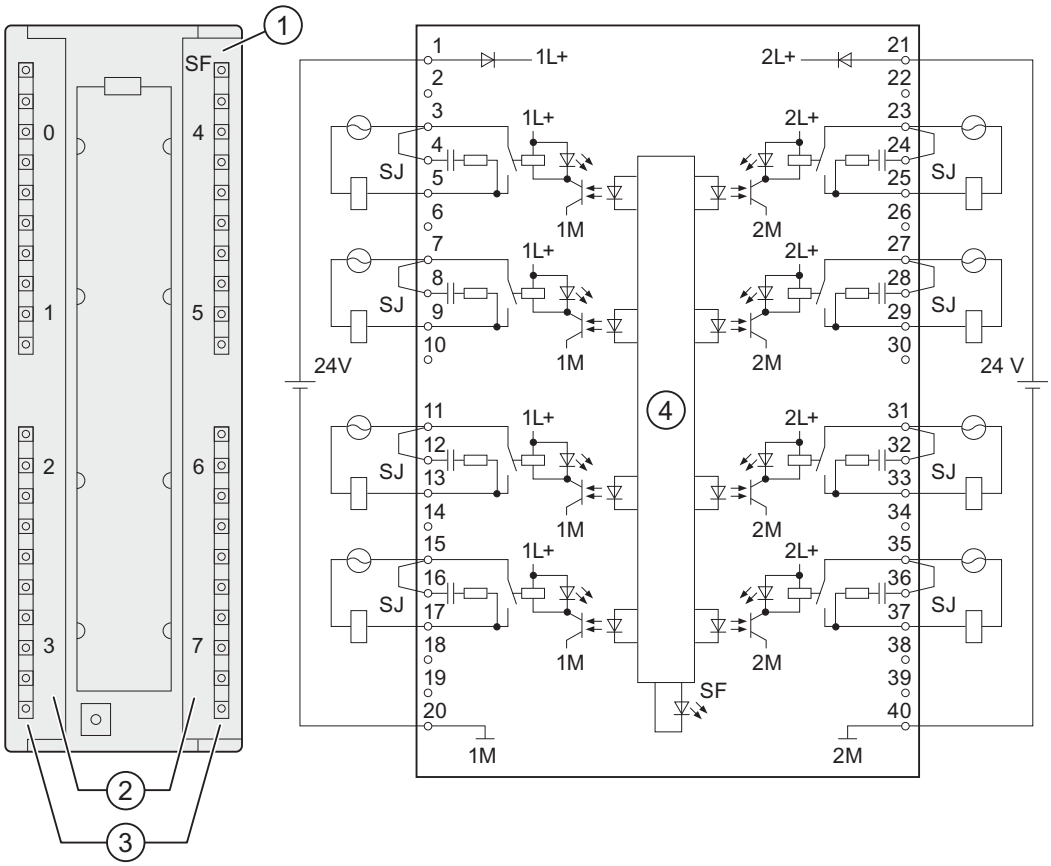

① Error LED - red
② Channel number
③ Status display - green
④ Backplane bus interface

Operation on safety extra-low voltage (SELV)

Make allowances for the special feature outlined below when operating the 6ES7322-5HF00-0AB0 relay output module on SELV:

The horizontally adjacent terminal of a terminal operated on SELV may not be operated at a rated voltage higher than 120 VUC. When operated at voltages higher than 120 VUC, the creepage distances and air gaps in the 40-pin front connector do not meet SIMATIC requirements of safe electrical separation.

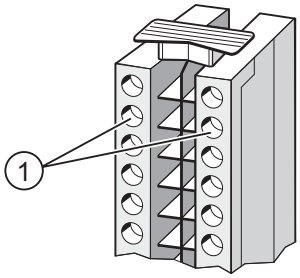

① If one of two horizontally adjacent terminals is operated on SELV, the other terminal may not be operated at more than 120 VUC.

Technical specifications of SM 322; DO 8 x Rel. AC 230V/5A

Technical specifications	
Dimensions and weight	
Dimensions W x H x D (mm)	40 x 125 x 117
Weight	ca. 320 g
Module-specific data	
Supports parameter reassignment in RUN	Yes
• Reaction of non-programmed outputs	Return the output value which was valid before the parameterization
Supports isochronous mode	no
Number of outputs	8
Cable length • unshielded • shielded	 max. 600 m max. 1000 m
Voltages, currents, electrical potentials	
Rated electronics supply voltage L+	24 VDC
• Reverse polarity protection	yes
Total current of outputs (per group)	
• horizontal mounting position up to 60°	max. 5 A
• vertical mounting position up to 40°	max. 5 A
Electrical isolation	
• between channels and the backplane bus	yes
• between channels and the power supply to relays	yes
• between channels in groups of	yes 1
Maximum potential difference	
• Between $M_{internal}$ and the power supply to relays	75 VDC/60 VAC
• Between $M_{internal}$ and the power supply to relays and outputs	250 VAC
• Between outputs of different groups	500 VAC
Isolation test voltage	
• between $M_{internal}$ and the power supply to relays	500 VDC
• between $M_{internal}$ and the power supply to relays and outputs	1500 VAC
• between outputs of different groups	2000 VAC
Current consumption • from the backplane bus • from power supply L+	 max. 100 mA max. 160 mA
Power loss of the module	typ. 3.5 W

Technical specifications		
Status, interrupts, diagnostics		
Status display	green LED per channel	
Interrupts		
• Diagnostic interrupt	programmable	
Diagnostic functions	programmable	
• Group error display	red LED (SF)	
• Reading diagnostics information	supported	
Actuator selection data		
Thermal current, continuous	max. 5 A	
Minimum load voltage / current	10 V /10 mA[1)]	
Residual current	11.5 mA [2)]	
Short circuit-proof to IEC 947-5-1	With circuit-breaker, characteristics B, for: cos Φ 1.0: 600 A cos Φ 0.5...0.7: 900 A With 8 A Diazed fuse: 1000 A	
Switching capacity and useful life of contacts		
• with resistive load		
Voltage	Current	Number of switching cycles (typ.)
24 VDC	5.0 A	0.2 million
24 VDC	2.5 A	0.4 million
24 VDC	1.0 A	0.9 million
24 VDC	0.2 A	1.7 million
24 VDC	0.1 A	2 million
120 VDC	0.2 A	1.7 million
120 VDC	0.1 A	2 million
230 VAC	5.0 A	0.2 million
230 VAC	2.5 A	0.4 million
230 VAC	1.0 A	0.9 million
230 VAC	0.2 A	1.7 million
230 VAC	0.1 A	2 million
• with inductive load		

Technical specifications		
Voltage	Current	Number of switching cycles (typ.)
24 VDC	5.0 A	0.1 million
24 VDC	2.5 A	0.25 million
24 VDC	1.0 A	0.5 million
24 VDC	0.2 A	1 million
24 VDC	0.1 A	1.2 million
120 VDC	0.1 A	1.2 million
230 VAC	5.0 A	0.1 million
230 VAC	2.5 A	0.25 million
230 VAC	1.0 A	0.5 million
230 VAC	0.2 A	1 million
230 VAC	0.1 A	1.2 million
An RC quenching element (jumper "SJ" inserted) or an external protection circuit extend the service life of contacts.		
Size of the motor starter	max. size 5 to NEMA	
	Power	Number of switching cycles (typ.)
Lamp load (230 VAC)	1000 W 1500 W	25000 10000
Energy-saving lamps/fluorescent lamps with electronic ballast[3)]	10 x 58 W	25000
Fluorescent lamps, conventionally compensated	1 x 58 W	25000
Fluorescent lamps, non-compensated	10 x 58 W	25000
Contact protection	RC quenching element; 330 Ω, 0.1 µF	
Wiring two outputs in parallel		
• for redundant load control	supported (only outputs with the same load voltage)	
• for performance increase	not supported	
Control of a digital input	supported	
Switching frequency • Mechanical	max. 10 Hz	
• with resistive load	max. 2 Hz	
• with inductive load to IEC 947-5-1, DC13/AC15	max. 0.5 Hz	
• with lamp load	max. 2 Hz	
Wiring of the actuators	using a 40-pin front connector	
[1)] Without inserted jumper (SJ). [2)] With AC load voltage and inserted jumper (SJ). No residual current if the jumper (SJ) is not installed. [3)] The sum of all inrush currents on a ballast connected to an output must not exceed 5 A.		

Note

The residual current of an RC quenching element connected to IEC Type 1 inputs may cause unwanted signal states. Remove the SJ jumper to rectify this fault.

3.35.1 Parameters of SM 322; DO 8 x Rel. AC 230V/5A

Parameters of SM 322; DO 8 x Rel. AC 230V/5A

The table below provides an overview of configurable parameters and defaults for SM 322; DO 8 x Rel. AC 230V/5A.

The defaults apply if you have not set any parameters in **STEP 7**.

Table 3- 34 Parameters of SM 322; DO 8 x Rel. AC 230V/5A

Parameters	Range of values	Defaults	Parameter type	Scope
Enable • Diagnostic interrupts	yes/no	no	Dynamic	Module
Reaction to CPU STOP	Set substitution value (SSV) Hold last value (HLV)	SSV	Dynamic	Channel
Set substitution value "1"	yes/no	no	Dynamic	Channel

See also

Programming digital modules (Page 59)

3.35.2 SM 322; DO 8 x Rel. AC 230V/5A - Diagnostics

Diagnostics messages of SM 322; DO 8 x Rel. AC 230V/5A

The table below provides an overview of the diagnostic messages of SM 322; DO 8 x Rel. AC 230V/5A.

Table 3- 35 Diagnostics messages of SM 322; DO 8 x Rel. AC 230V/5A

Diagnostics message	LED	Scope of diagnostics	programmable
Watchdog time-out	SF	Module	no
EPROM error	SF	Module	no
RAM error	SF	Module	no

Causes of error and troubleshooting

Table 3- 36 Diagnostic messages of SM 322; DO 8 x Rel. AC230V/5A, cause of error and troubleshooting

Diagnostics message	Error detection	Possible cause of error	To correct or avoid errors
Watchdog time-out	generally	infrequent high level of electromagnetic interference	Eliminate interference and cycle the CPU power supply off and on
		Defective module	Replace the module
EPROM error	generally	infrequent high level of electromagnetic interference	Eliminate interference and cycle the CPU power supply off and on
		Defective module	Replace the module
RAM error	generally	transient high electromagnetic interference	Eliminate interference and cycle the CPU power supply off and on
		Defective module	Replace the module

3.35.3 SM 322; DO 8 x Rel. AC 230V/5A - Interrupts

Introduction

The SM 322; DO 8 x Rel. AC 230V/5A can trigger diagnostic interrupts.

For detailed information on the OBs and SFCs mentioned below, refer to the *STEP 7* Online Help.

Enabling interrupts

There is no default interrupt setting, i.e. interrupts are disabled if not set accordingly. Program the interrupt enable parameter in **STEP 7**.

Diagnostic interrupt

Incoming error events (initial occurrence) and outgoing error events (error is cleared) are reported by means of diagnostics interrupt, if this interrupt is enabled.

The CPU interrupts user program execution in order to process diagnostics interrupt OB82.

You can call SFC51 or 59 in OB82 in the user program to obtain detailed diagnostics data from the module.

Diagnostics data remain consistent until the program exits OB82. The module acknowledges the diagnostics interrupt when the program exits OB82.

3.36 Relay output module SM 322; DO 8 x Rel. AC 230 V/5 A; (6ES7322-1HF10-0AA0)

Order number: "Standard module"

6ES7322-1HF10-0AA0

Order number: "SIPLUS S7-300 module"

6AG1322-1HF10-2AA0

Properties

Properties of SM 322; DO 8 x Rel. AC 230 V/5 A:

- 8 outputs, electrically isolated in groups of 1
- Rated load voltage 24 VDC to 120 VDC, 48 VAC to 230 VAC
- Suitable for AC/DC solenoid valves, contactors, motor starters, FHP motors and signal lamps.

Measures to take for switching currents > 3 A

Note

Always use connecting cables with a cross-section of 1.5 mm^2 when operating with switching currents > 3 A in order to reduce any temperature rise in the connector area of the module to a minimum.

Wiring and block diagrams of the SM 322; DO 8 x Rel. AC 230 V/5 A

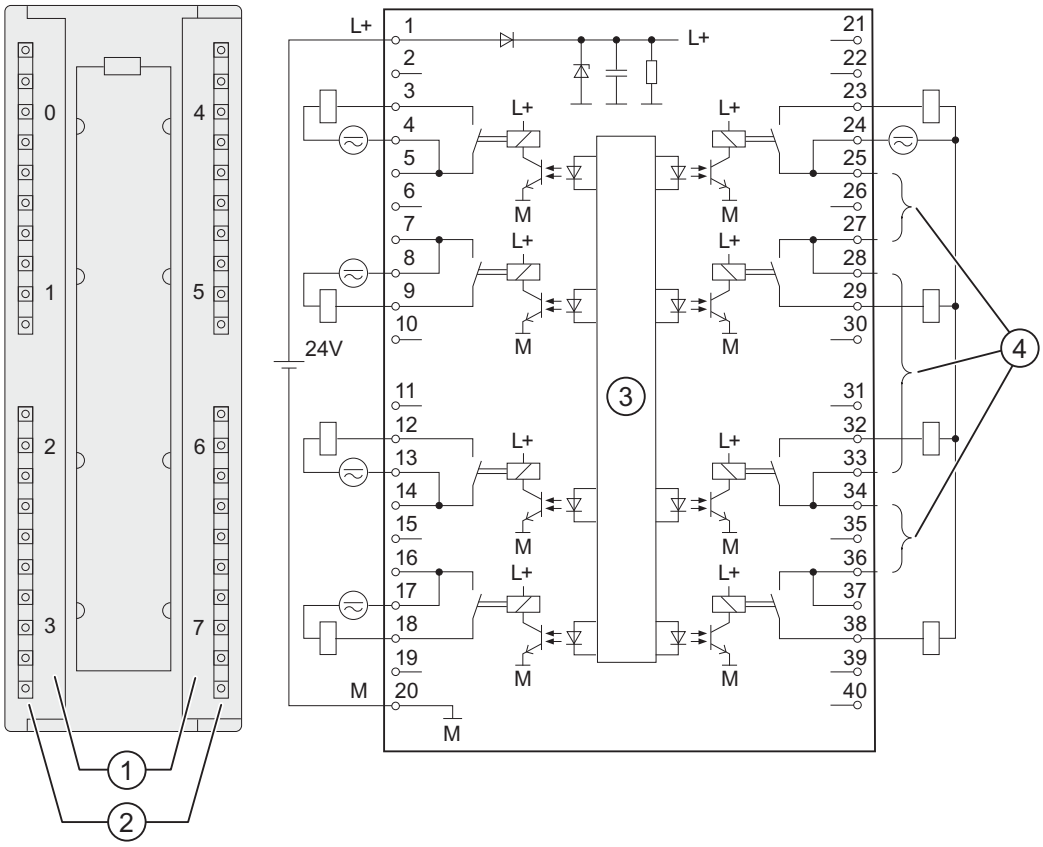

① Channel number

② Status displays - green

③ Backplane bus interface

④ Options of looping the power supply to contacts

$I_{Accumulated\ current}$ ≦ 8 A at T_U ≦ 30 °C

$I_{Accumulated\ current}$ ≦ 5 A at T_U ≦ 60 °C

Operation on safety extra-low voltage (SELV)

Make allowances for the special feature outlined below when operating relay output module 322-1HF10 on SELV:

To operate a terminal on SELV, the horizontally adjacent terminal may not be operated at a rated voltage higher than 120 VUC. The creepage distances and air gaps of the 40-pin front connector do not meet SIMATIC requirements in terms of safe electrical separation if operated with voltages above 120 VUC.

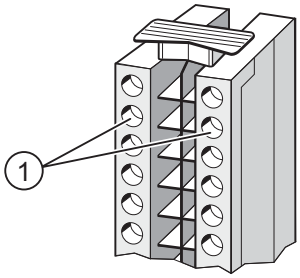

① If one of two horizontally adjacent terminals is operated on SELV, the other terminal may not be operated at more than 120 VUC.

SM 322; DO 8 x Rel. AC 230 V/5 A - Technical specifications

Technical specifications	
Dimensions and weight	
Dimensions W x H x D (mm)	40 x 125 x 120
Weight	ca. 320 g
Module-specific data	
Supports isochronous mode	no
Number of outputs	8
Cable length • unshielded • shielded	 max. 600 m max. 1000 m
Voltages, currents, electrical potentials	
Rated power supply L+ to the relays	24 VDC
Total current of outputs (per group)	
• horizontal mounting position to 30 °C to 60 °C • vertical mounting position to 40 °C	 max. 8 A max. 5 A max. 5 A
Electrical isolation	
• between channels and the backplane bus	yes
• between channels in groups of	yes 1
Maximum potential difference	
• Between $M_{internal}$ and the power supply to relays	75 VDC/60 VAC
• Between $M_{internal}$ and the power supply to relays and outputs	250 VAC
• Between outputs of different groups	500 VAC
Isolation test voltage	
• between $M_{internal}$ and the power supply to relays	500 VDC
• between $M_{internal}$ and the power supply to relays and outputs	1500 VAC
• between outputs of different groups	2000 VAC
Current consumption • from the backplane bus • from power supply L+	 max. 40 mA max. 125 mA
Power loss of the module	typ. 3.2 W

Technical specifications		
Status, interrupts, diagnostics		
Status display Interrupt Diagnostic functions	green LED per channel none none	
Actuator selection data		
Thermal current, continuous	max. 8 A	
Minimum load voltage / current	10 V / 5 mA	
Short-circuit current to IEC 947-5-1	With circuit-breaker, characteristics B, for: cos Φ 1.0: 600 A cos Φ 0.5...0.7: 900 A With 8 A Diazed fuse: 1000 A	
Switching capacity and useful life of contacts		
• with resistive load		
Voltage	Current	Number of switching cycles (typ.)
24 VDC	8.0 A 4.0 A 2.0 A 0.5 A	0.1 million 0.3 million 0.7 million 4.0 million
60 VDC	0.5 A	4 million
120 VDC	0.2 A	1.6 million
48 VAC	8.0 A 2.0 A	0.1 million 1.6 million
60 VAC	8.0 A 2.0 A	0.1 million 1.2 million
120 VAC	8.0 A 4.0 A 2.0 A 1.0 A 0.5 A	0.1 million 0.3 million 0.5 million 0.7 million 1.5 million
230 VAC	8.0 A 4.0 A 2.0 A 1.0 A 0.5 A	0.1 million 0.3 million 0.5 million 0.7 million 1.5 million

Technical specifications		
Switching capacity and useful life of contacts		
• with inductive load to IEC 947-5-1 DC13/AC15		
Voltage	Current	Number of switching cycles (typ.)
24 VDC	2.0 A 1.0 A 0.5 A	0.3 million 0.5 million 1 million
60 VDC	0.5 A 0.3 A	0.5 million 1 million
120 VDC	0.2 A	0.5 million
48 VAC	3.0 A 1.5 A	0.5 million 1 million
60 VAC	3.0 A 1.5A	0.3 million 1 million
120 VAC	3.0 A 2.0 A 1.0 A 0.5 A	0.2 million 0.3 million 0.7 million 2 million
230 VAC	3.0 A 2.0 A 1.0 A 0.5 A	0.1 million 0.3 million 0.7 million 2.0 million
• Aux. contactors Size 0 (3TH28)		30 million
An external protective circuit extends the useful life of contacts.		
	Power	Number of switching cycles (typ.)
Lamp load (230 VAC)	1000 W 1500 W	25000 10000
Energy-saving lamps/fluorescent lamps with electronic ballast	10 x 58 W	25000
Fluorescent lamps, conventionally compensated	1 x 58 W	25000
Fluorescent lamps, non-compensated	10 x 58 W	25000
Contact protection (internal)	none	
Wiring two outputs in parallel		
• For redundant load control	supported	
• for performance increase	not supported	
Control of a digital input	supported	
Switching frequency • Mechanical	max. 10 Hz	
• with resistive load	max. 2 Hz	
• with inductive load to IEC 947-5-1, DC13/AC15	max. 0.5 Hz	
• with lamp load	max. 2 Hz	
Wiring of the actuators	using a 40-pin front connector	

3.37 Digital IO module SM 323; DI 16/DO 16 x DC 24 V/0.5 A; (6ES7323-1BL00-0AA0)

Order number

6ES7323-1BL00-0AA0

Properties

Properties of SM 323; DI 16/DO 16 x DC 24 V/0.5 A:

- 16 inputs, electrically isolated in groups of 16
- 16 outputs, electrically isolated in groups of 8
- Rated input voltage 24 VDC
- Rated load voltage 24 VDC
- Inputs suitable for switches and 2-/3-/4-wire proximity switches (BEROs)
- Outputs capable of driving solenoid valves, DC contactors and indicator lights

Use of the module with high-speed counters

Please note when using the module in combination with high-speed counters:

Note

When using a mechanical contact to switch on the 24-V power supply to SM 323; DI 16/DO 16 x DC 24 V/0.5 A, its outputs will carry "1" signal for the duration of ca. 50 µs, due to the circuit structure.

Wiring and block diagram of SM 323; DI 16/DO 16 x DC 24 V/0.5 A

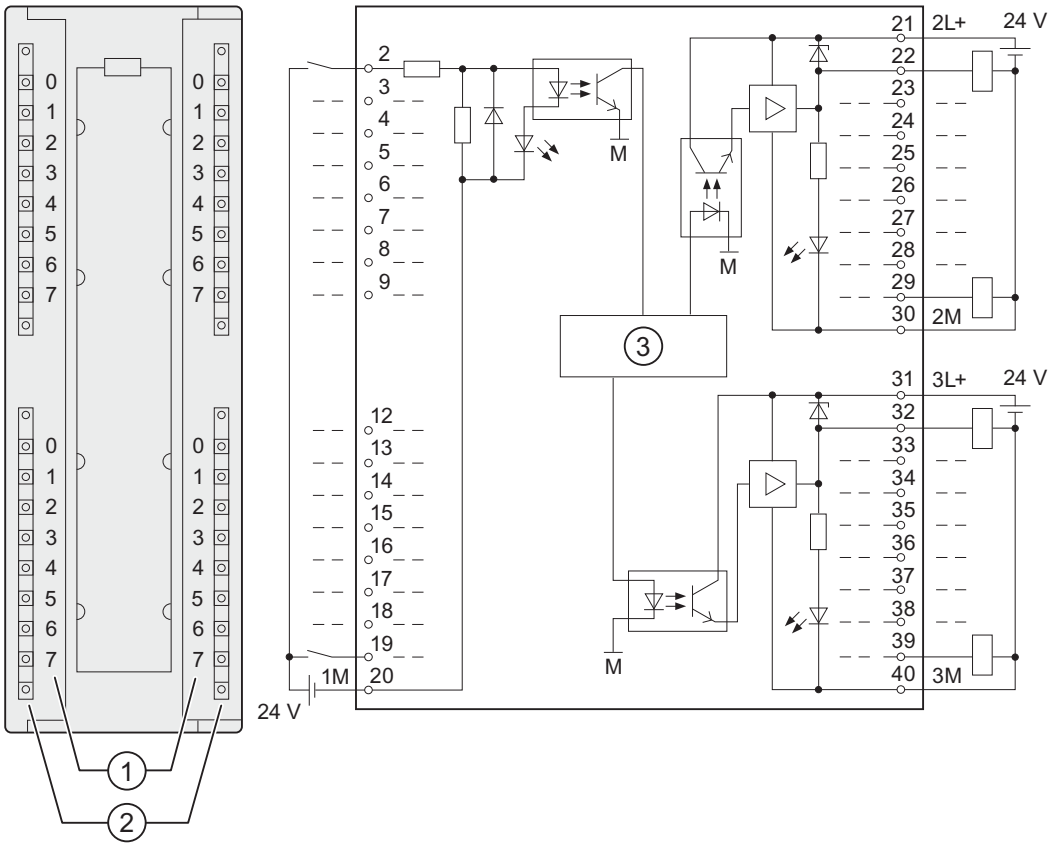

① Channel number
② Status displays - green
③ Backplane bus interface

Terminal assignment

The diagram below shows the IO addressing of channels.

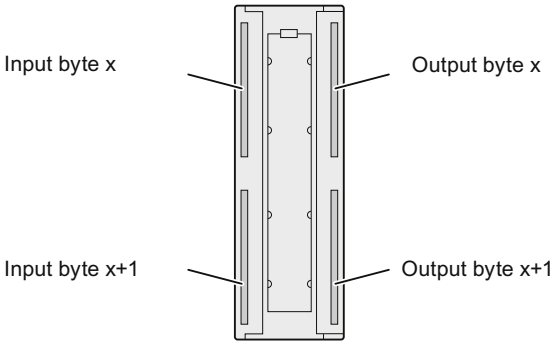

SM 323; DI 16/DO 16 x DC 24 V/0.5 A - Technical specifications

Technical specifications	
Dimensions and weight	
Dimensions W x H x D (mm)	40 x 125 x 117
Weight	ca. 260 g
Module-specific data	
Isochronous	no
Number of inputs	16
Number of outputs	16
Cable length • unshielded • shielded	 max. 600 m max. 1000 m
Voltages, currents, electrical potentials	
Rated load voltage L+	24 VDC
Number of simultaneously controlled inputs	
• horizontal mounting position to 40 °C to 60 °C	 16 8
• vertical mounting position to 40 °C	16
Total current of outputs (per group)	
• horizontal mounting position to 40 °C to 60 °C	 max. 4 A max. 3 A
• vertical mounting position to 40 °C	max. 2 A
Electrical isolation • between channels and the backplane bus	 yes
• between channels Inputs in groups of Outputs in groups of	yes 16 8
Maximum potential difference • between different circuits	 75 VDC / 60 VAC
Isolation test voltage	500 VDC
Current consumption • from the backplane bus • from load voltage L+ (no-load)	max. 80 mA max. 80 mA
Power loss of the module	typ. 6.5 W

Technical specifications	
Status, interrupts, diagnostics	
Status display	green LED per channel
Interrupts	none
Diagnostic functions	none
Sensor selection data	
Input voltage • Rated value • "1" signal • "0" signal	 24 VDC 13 V to 30 V - 30 V to + 5 V
Input current • "1" signal	 typ. 7 mA
Input delay • "0" to "1" transition • "1" to "0" transition	 1.2 ms to 4.8 ms 1.2 ms to 4.8 ms
Input characteristics	to IEC 61131, type 1
Connection of 2-wire BEROs • Permissible quiescent current	supported max. 1.5 mA
Wiring of the signal transducers	using a 40-pin front connector
Actuator selection data	
Output voltage • "1" signal	 min. L + (- 0.8 V)
Output current	
• "1" signal Rated value Permitted range	 0.5 A 5 mA to 0.6 A
• "0" signal (residual current)	max. 0.5 mA
Output delay (resistive load)	
• "0" to "1" transition • "1" to "0" transition	Max. 100 µs Max. 500 µs
Load resistance range	48 Ω to 4 kΩ
Lamp load	Max. 5 W
Wiring two outputs in parallel	
• for redundant load control	supported (only outputs of the same group)
• for performance increase	not supported
Control of a digital input	supported
Switching frequency • with resistive load • with inductive load to IEC 947-5-1, DC 13 • with lamp load	 max. 100 Hz max. 0.5 Hz max. 10 Hz

Technical specifications	
Internal limiting of the inductive shutdown voltage to	typ. L + (- 53 V)
Short circuit-proof output	yes, electronic
• Threshold	typ. 1 A
Wiring of the actuators	using a 40-pin front connector

3.38 Digital IO module SM 323; DI 8/DO 8 x DC 24 V/0.5 A; (6ES7323-1BH01-0AA0)

Order number: "Standard module"

6ES7323-1BH01-0AA0

Order number: "SIPLUS S7-300 module"

6AG1323-1BH01-2AA0

Properties

Properties of SM 323; DI 8/DO 8 x DC 24 V/0.5 A:

- 8 inputs, electrically isolated in groups of 8
- 8 outputs, electrically isolated in groups of 8
- Rated input voltage 24 VDC
- Rated load voltage 24 VDC
- Inputs suitable for switches and 2-/3-/4-wire proximity switches (BEROs)
- Outputs capable of driving solenoid valves, DC contactors and indicator lights

Use of the module with high-speed counters

Please note when using the module in combination with high-speed counters:

Note

When using a mechanical contact to switch on the 24-V power supply to SM 323; DI 8/DO 8 x DC 24 V/0.5 A, its outputs will carry "1" signal for the duration of ca. 50 µs, due to the circuit structure.

Wiring and block diagram of SM 323; DI 8/DO 8 x DC 24 V/0.5 A

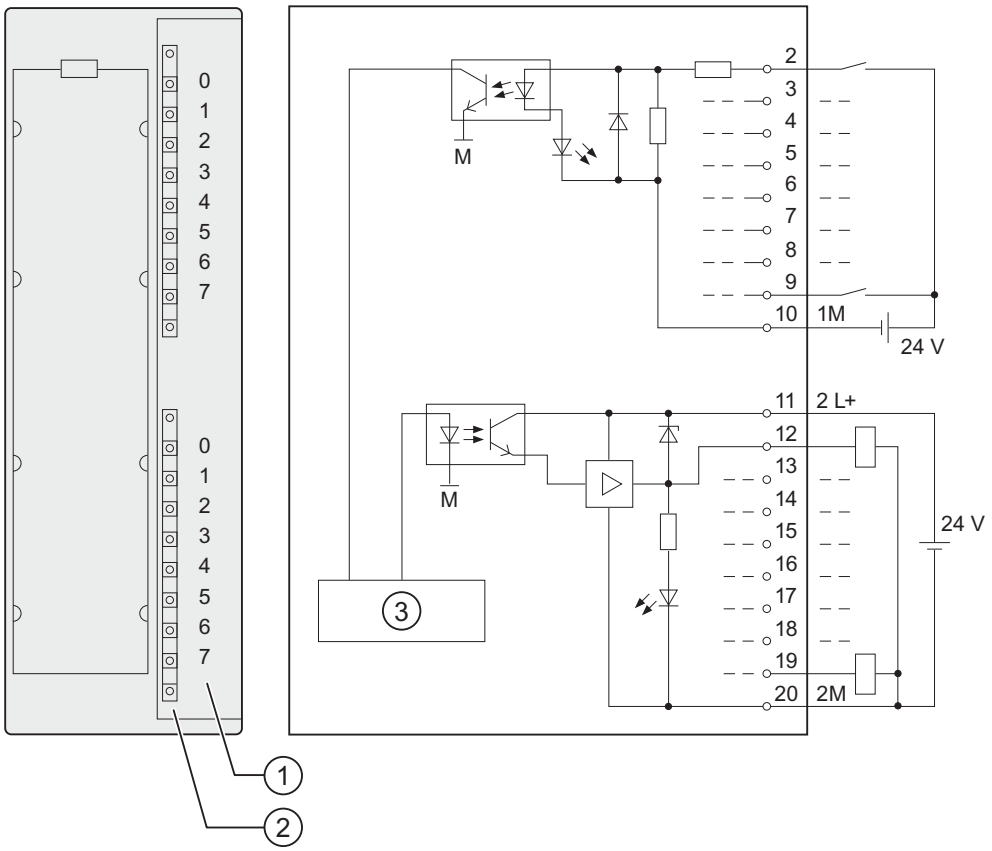

① Channel number
② Status displays - green
③ Backplane bus interface

SM 323; DI 8/DO 8 x DC 24 V/0.5 A - Technical specifications

Technical specifications	
Dimensions and weight	
Dimensions W x H x D (mm)	40 x 125 x 117
Weight	ca. 200 g
Module-specific data	
Supports isochronous mode	no
Number of inputs	8
Number of outputs	8
Cable length • unshielded • shielded	 max. 600 m max. 1000 m
Voltages, currents, electrical potentials	
Rated load voltage L+	24 VDC
Number of simultaneously controlled inputs	
• horizontal mounting position to 60 °C • vertical mounting position to 40 °C	8 8
Total current of outputs (per group)	
• horizontal mounting position to 60 °C • vertical mounting position to 40 °C	max. 4 A max. 4 A
Electrical isolation	
• between channels and the backplane bus	yes
• between channels Inputs in groups of Outputs in groups of	yes 8 8
Maximum potential difference • between different circuits	 75 VDC / 60 VAC
Isolation test voltage	500 VDC
Current consumption • from the backplane bus • from load voltage L+ (no-load)	 max. 40 mA max. 40 mA
Power loss of the module	typ. 3.5 W
Status, interrupts, diagnostics	
Status display	green LED per channel
Interrupts	none

Technical specifications	
Diagnostic functions	none
Sensor selection data	
Input voltage • Rated value • "1" signal • "0" signal	 24 VDC 13 V to 30 V - 30 V to + 5 V
Input current • "1" signal	 typ. 7 mA
Input delay • "0" to "1" transition • "1" to "0" transition	 1.2 ms to 4.8 ms 1.2 ms to 4.8 ms
Input characteristics	to IEC 61131, type 1
Connection of 2-wire BEROs • Permissible quiescent current	supported max. 1.5 mA
Wiring of the signal sensors	using a 20-pin front connector
Actuator selection data	
Output voltage • "1" signal	 min. L + (- 0.8 V)
Output current	
• "1" signal Rated value Permitted range	 0.5 A 5 mA to 0.6 A
• "0" signal (residual current)	Max. 0.5 mA
Output delay (resistive load)	
• "0" to "1" transition • "1" to "0" transition	Max. 100 µs Max. 500 µs
Load resistance range	48 Ω to 4 kΩ
Lamp load	Max. 5 W
Wiring two outputs in parallel	
• for redundant load control	supported (only outputs of the same group)
• for performance increase	not supported
Control of a digital input	supported
Switching frequency • with resistive load • with inductive load to IEC 947-5-1, DC 13 • with lamp load	 max. 100 Hz max. 0.5 Hz max. 10 Hz
Internal limiting of the inductive shutdown voltage to	typ. L + (- 53 V)

Technical specifications	
Short circuit-proof output	yes, electronic
• Threshold	typ. 1 A
Wiring of the actuators	using a 20-pin front connector

3.39 Programmable digital IO module SM 327; DI 8/DO 8 x DC 24 V/0.5 A (6ES7327-1BH00-0AB0)

Order number

6ES7327-1BH00-0AB0

Properties

Properties of SM 327; DI 8/DO 8 x DC 24 V/0.5 A:

- 8 digital inputs, plus 8 separately programmable inputs/outputs, electrically isolated in groups of 16
- Rated input voltage 24 VDC
- Inputs suitable for switches and 2-/3-/4-wire proximity switches (BEROs)
- Output current 0.5 A
- Rated load voltage 24 VDC
- Outputs capable of driving solenoid valves, DC contactors and indicator lights
- Dynamic change of parameters in RUN (CiR-compatible), separately at each channel.
- Readback of outputs.

Use of the module with high-speed counters

Please note when using the module in combination with high-speed counters:

Note

When using a mechanical contact to switch on the 24-V power supply to SM 327; DI 8/DO 8 x DC 24 V/0.5 A, its outputs will carry "1" signal for the duration of ca. 50 µs, due to the circuit structure.

Wiring and block diagram of SM 327; DI 8/DO 8 x DC 24 V/0.5 A, programmable

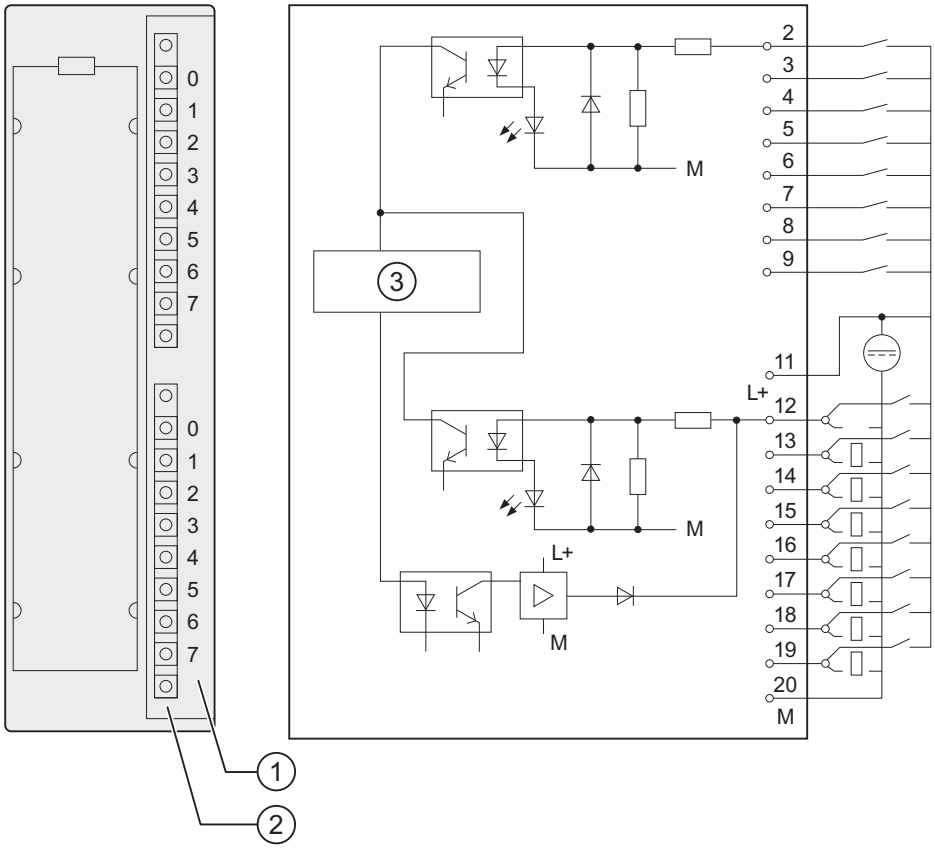

① Channel number
② Status display - green
③ Backplane bus interface

Technical specifications of SM 327; DI 8/DO 8 x DC 24 V/0.5 A, programmable

Technical specifications	
Dimensions and weight	
Dimensions W x H x D (mm)	40 x 125 x 120
Weight	ca. 200 g
Module-specific data	
Supports isochronous mode	no
Number of inputs	8 digital
Number of inputs/outputs	8, can be programmed separately
Cable length • unshielded • shielded	 max. 600 m max. 1000 m
Voltages, currents, electrical potentials	
Rated load voltage L+	24 VDC
Number of simultaneously controlled inputs	
• horizontal mounting position to 60 °C • vertical mounting position to 40 °C	 16 16
Total current of outputs (per group)	
• horizontal mounting position to 40 °C to 60 °C • vertical mounting position to 40 °C	 max. 4 A max. 3 A max. 2 A
Electrical isolation	
• between channels and the backplane bus	yes
• between channels	no
Maximum potential difference • between different circuits	 75 VDC / 60 VAC
Isolation test voltage	500 VDC
Current consumption • from the backplane bus • from load voltage L+ (no-load)	 max. 60 mA max. 20 mA
Power loss of the module	typ. 3 W
Status, interrupts, diagnostics	
Status display	green LED per channel
Interrupts	none
Diagnostic functions	none

Technical specifications	
Sensor selection data	
Input voltage • Rated value • "1" signal • "0" signal	 24 VDC 15 V to 30 V - 30 V to + 5 V
Input current • "1" signal	 typ. 6 mA
Input delay • "0" to "1" transition • "1" to "0" transition	 1.2 ms to 4.8 ms 1.2 ms to 4.8 ms
Input characteristics	to IEC 61131, type 1
Connection of 2-wire BEROs • Permissible quiescent current	supported max. 1.5 mA
Wiring of the signal transducers	using a 20pin front connector
Actuator selection data	
Output voltage • "1" signal	 min. L+ (-1.5 V)
Output current	
• "1" signal Rated value Permitted range	 0.5 A 5 mA to 0.6 A
• "0" signal (residual current)	Max. 0.5 mA
Output delay (resistive load)	
• "0" to "1" transition • "1" to "0" transition	max. 350 µs max. 500 µs
Load resistance range	48 Ω to 4 kΩ
Lamp load	max. 5 W
Wiring two outputs in parallel	
• for redundant load control	supported
• for performance increase	not supported
Control of a digital input	supported
Switching frequency • with resistive load • with inductive load to IEC 947-5-1, DC 13 • with lamp load	 max. 100 Hz max. 0.5 Hz max. 10 Hz
Internal limiting of the inductive shutdown voltage to	typ. L + (-54 V)
Short circuit-proof output	yes, electronic
• Threshold	typ. 1 A

Technical specifications	
Wiring of the actuators	using a 20pin front connector

3.39.1 Parameters of SM 327; DI 8/DO 8 x 24 VDC/0.5 A

Programming

The general procedure of programming digital modules is described in the chapter Programming digital modules (Page 59).

Parameters of SM 327; DI 8/DO 8 x DC 24 V/0.5 A, programmable

The table below lists the programmable parameters of SM 327; DI 8/DO 8 x DC 24 V/0.5 A, including defaults.

The defaults apply if you have not set any parameters in *STEP 7*.

The comparison illustrates the parameters you can edit:

- in*STEP 7*
- using SFC55 "WR_PARM"
- using SFB53 "WRREC" (for GSD, for example).

Parameters set in *STEP 7* may also be transferred to the module using SFCs 56 and 57, and SFB 53 (refer to the *STEP 7*) Online Help).

Table 3- 37 Parameters of SM 327; DI 8/DO 8 x DC 24 V/0.5 A

Parameters	Range of values	Default	Parameter type	Scope	Data record number	Programmable using ...	
						SFC55, SFB53	PG
Digital output	yes/no	no	dynamic	Channel	1	yes	yes

3.39.1.1 Structure of data record 1 of SM 327; DI 8/DO 8 x DC 24 V/0.5 A

Structure of data record 1

The figure below shows the structure of data record 1 of the dynamic parameters of SM 327; DI 8/DO 8 x DC 24 V/0.5 A.

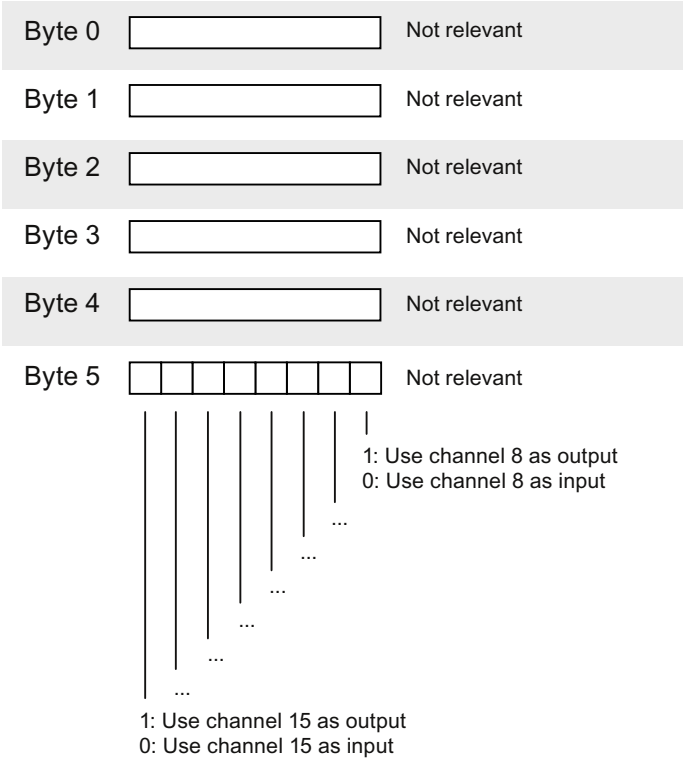

Figure 3-10 Structure of data record 1 of SM 327; DI 8/DO 8 x DC 24 V/0.5 A

Readback of outputs

The readback function is a simple form of diagnostics. You can use this to determine whether the information output to the process ("1" or "0") actually arrives there.

The digital outputs can be read back to the user data area: When Q11.3 is configured as an output, for example, it can be read back at I11.3. See the figure below

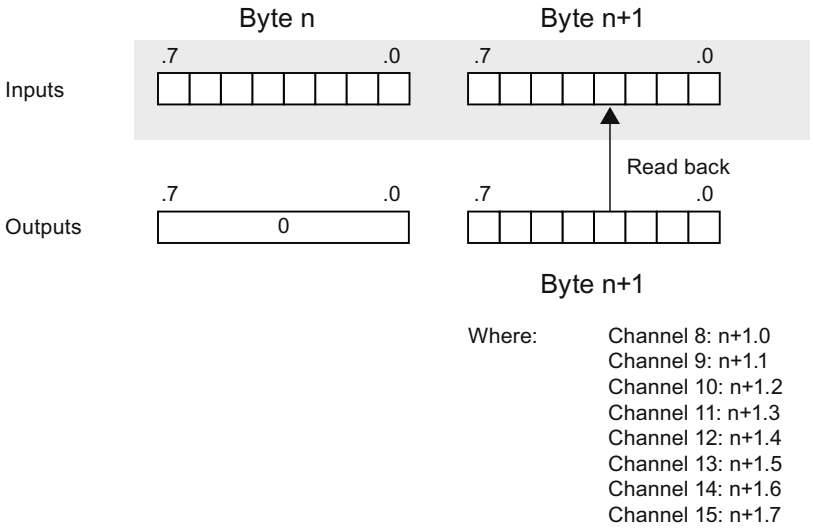

Figure 3-11 Readback of the outputs of SM 327; DI 8/DO 8 x DC 24 V/0.5 A

Principles of analog value processing 4

4.1 Overview

Introduction

This chapter describes the basic procedure in wiring and connecting signal sensors to analog inputs and analog outputs and corresponding items to observe.

The diagrams below do not show the connecting lines required to connect the electrical potentials of the analog input module and sensors.

Always adhere to the general information on sensor wiring and connecting.

Special wiring and connecting options are described in the corresponding module data.

Installation and wiring

For information on installation and wiring, refer to the S7-300, CPU 31xC, and CPU 31x Operating Instructions: Installation The operating instructions are available on the Internet (http://support.automation.siemens.com/WW/view/en/13008499).

4.2 Wiring and connecting transducers to analog inputs

Transducers which can be wired and connected to analog inputs

You can wire and connect the following transducers to the analog input modules, depending on the type of measurement:

- Voltage transducers
- Current transducers
  - As 2-wire transducer
  - As 4-wire transducer
- Resistors
- Thermocouples

Cables for analog signals

Always use shielded twisted-pair cables to wire analog signals. This reduces interference. Connect both ends of the analog cable shield to ground.

Any potential difference between the cable ends may cause an equipotential current on the shield and disturbance on analog signals. Avoid this effect by means of low-impedance equipotential bonding. Ground only one end of the shielding.

Electrically isolated analog input modules

Electrically isolated analog input modules are not electrically interconnected at the reference point of the measuring circuit (M_{ANA} and/or M) and the M terminal of the CPU/IM153.

Always use electrically isolated analog input modules if there is any risk of potential difference V_{ISO} developing between the reference point of measuring circuit (MANA and/or M-) and the M terminal of the CPU/IM153 .

You can prevent the potential difference V_{ISO} from exceeding limits by means of equipotential interconnection of terminals M_{ANA} and M of the CPU/IM153.

Non-isolated analog input modules

Non-isolated analog input modules require a low-impedance connection between the reference point of measuring circuit M_{ANA} and the M terminal of the CPU or interface module IM 153. Interconnect terminals M_{ANA} with M of the CPU or interface module IM 153. Any potential difference between M_{ANA} and M of the CPU or interface module IM 153 may corrupt the analog signal.

Limited potential difference CMV

The permissible potential difference U_{CM} (CMV/Common Mode) may not be exceeded. A CMV fault may develop between

- the measurement inputs (M+ / M-) and the reference potential of measuring circuit M_{ANA}
- between the measuring inputs.

The following diagrams show the measures to be taken when wiring transducers.

4.2.1 Wiring and connecting electrically isolated transducers

Electrically isolated transducers

Electrically isolated transducers are not connected to local ground potential. They can be operated in electrically isolated mode.

Potential differences may develop between electrically isolated sensors. These potential differences may be caused by interference, or may develop as a result of the local distribution of transducers.

In environments with a high level of EMC interference, it is advisable to interconnect M- with M_{ANA} in order to prevent the permissible CMV value from being exceeded.

Note

For modules where $V_{CM} \leq 2.5$ V, interconnect M- and M_{ANA} (see the diagrams below).

Wiring and connecting electrically isolated transducesr to an electrically isolated AI

The CPU / IM 153 can be operated in grounded mode or ungrounded mode.

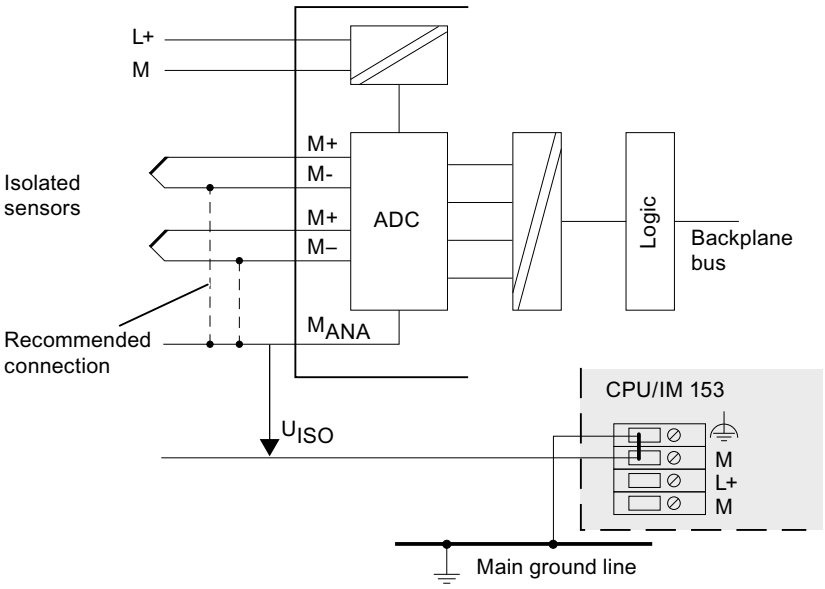

Figure 4-1 Wiring and connecting electrically isolated transducers to electrically isolated AI

Wiring and connecting electrically isolated transducers to a non-isolated AI

The CPU / IM 153 can be operated in grounded mode or ungrounded mode.

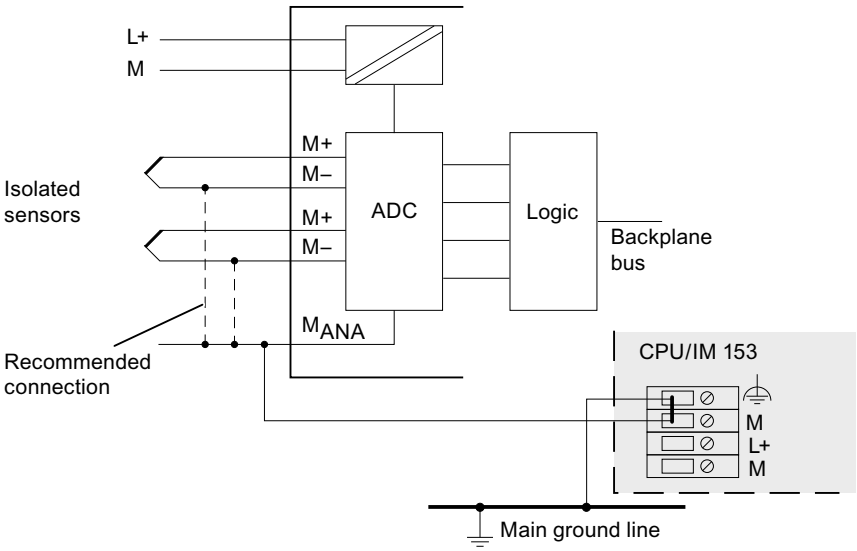

Figure 4-2 Wiring and connecting electrically isolated transducers to a non-isolated AI

Note

Do not interconnect M- with M_{ANA} when wiring and connecting 2-wire transducers and resistance transducers. An equalization current develops at the interconnection of M- with M_{ANA} and corrupts the measured value. This also applies to unused inputs which are programmed accordingly.

4.2.2 Wiring non-isolated transducers

Non-isolated transducer

Non-isolated transducers are interconnected with local ground potential. Always interconnect M_{ANA} with local ground when using non-isolated transducers.

Local conditions or interference may cause potential differences CMV (static or dynamic) between locally distributed measuring points. If the maximum CMV value is exceeded, interconnect the measuring points by means of equipotential conductors.

Wiring non-isolated transducer to electrically isolated AI

When connecting non-isolated transducers to electrically isolated modules, the CPU / IM 153 can be operated in grounded or ungrounded mode.

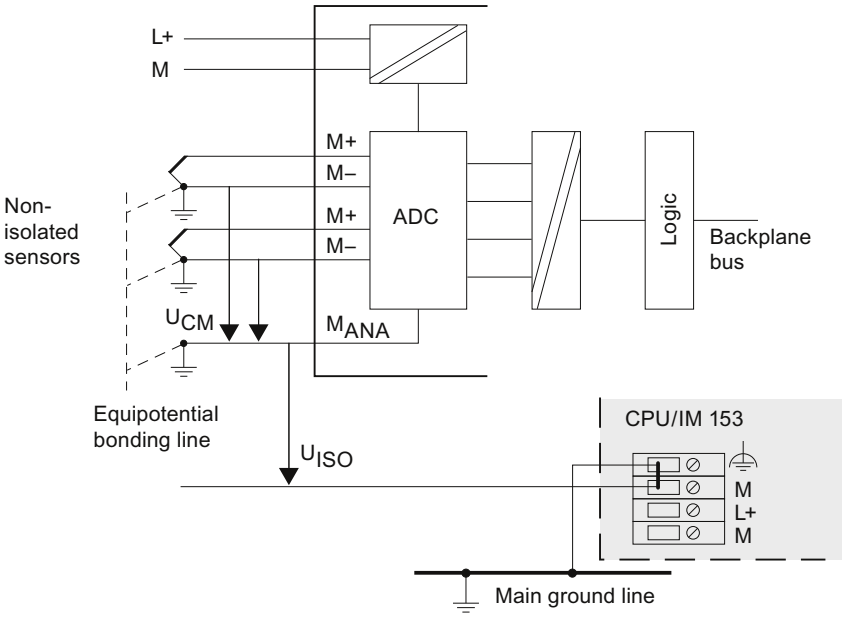

Figure 4-3 Wiring non-isolated transducer to electrically isolated AI

Wiring non-isolated transducer to a non-isolated AI

Always operate the CPU / IM 153 in grounded mode if you connect non-isolated transducers to non-isolated modules.

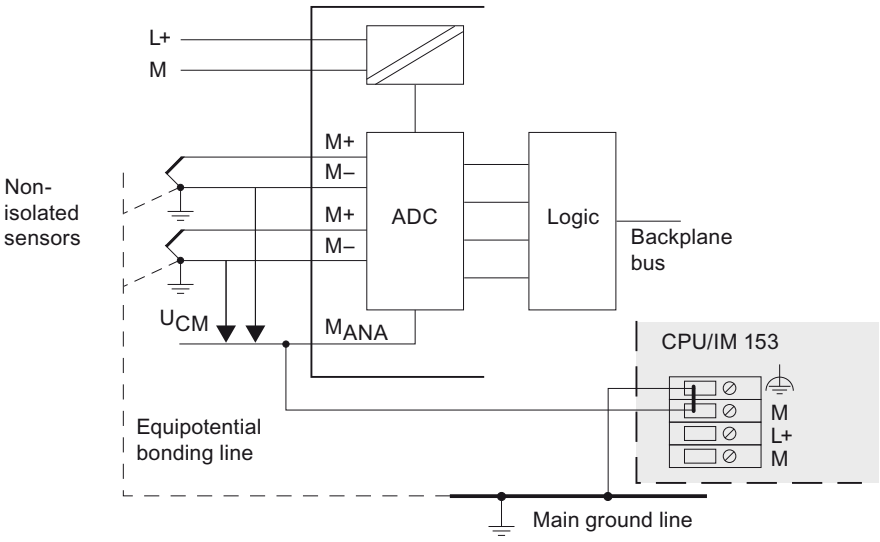

Figure 4-4 Wiring non-isolated transducers to a non-isolated AI

Note

You may not connect non-isolated 2-wire transducers/resistive transducers to non-isolated analog inputs!

4.3 Wiring and connecting voltage transducers

Introduction

This chapter describes how to wire and connect voltage transducers and and the corresponding items to be observed.

Wiring and connecting voltage transducers

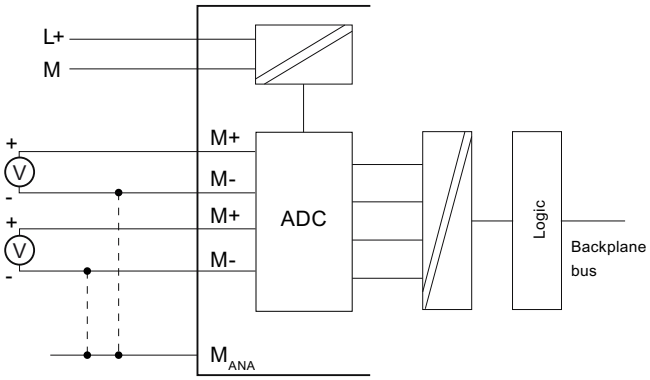

Figure 4-5 Wiring and connecting voltage transducers to electrically isolated AI

4.4 Wiring and connecting current transducers

Introduction

This chapter describes the wiring and connecting of current transducers and rules to be observed.

Supported current transducers

- As 2-wire transducer
- As 4-wire transducer

Wiring and connecting 2-wire transducers with power supply from the module

The 2-wire transducer is wired to the short circuit-proof supply voltage at the terminals of the analog input module.

The 2-wire transducer converts the process variable into a current. 2-wire transducers must be electrically isolated.

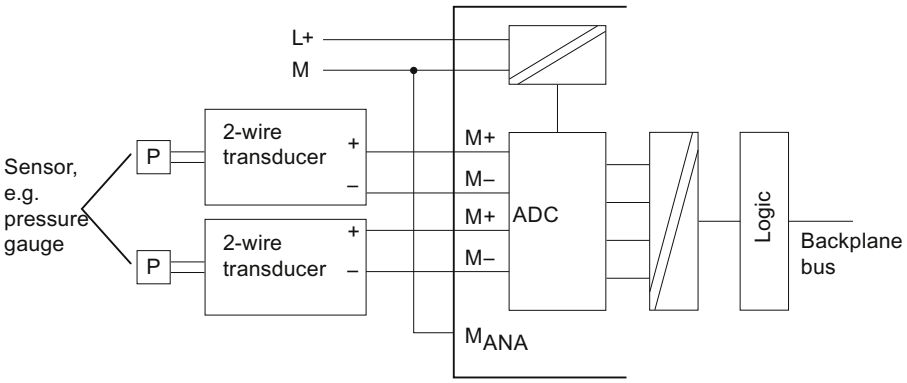

Figure 4-6 Wiring and connecting 2-wire transducers to electrically isolated AI

Wiring and connecting 2-wire transducers with power supply from L+

Configure the 2-wire as a 4-wire transducer in *STEP 7* if it is connected to supply voltage L+.

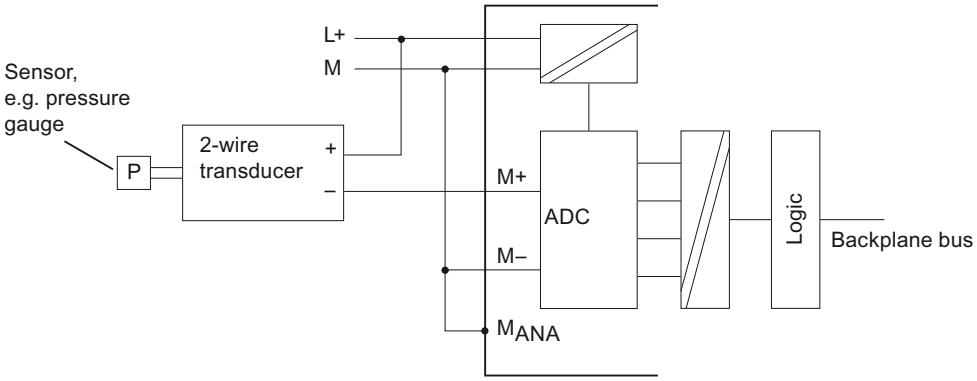

Figure 4-7 Wiring and connecting a 2-wire transducer with supply from L + to an electrically isolated AI

Wiring and connecting 4-wire transducers

4-wire transducers are connected to a separately power supply.

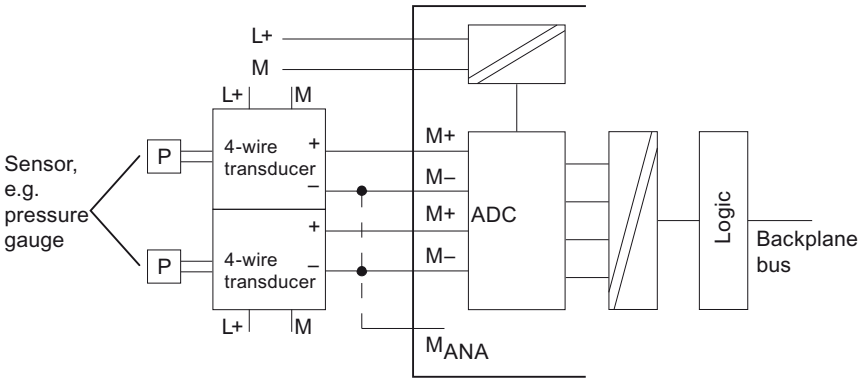

Figure 4-8 Wiring and connecting 4-wire transducers to electrically isolated AI

4.5 Wiring and connecting resistance thermometers and resistors

Introduction

This chapter describes the wiring and connecting of resistance thermometers and resistors and rules to be observed.

Supported resistance transducers

- With 4-wire connection
- With 3-wire connection
- With 2-wire connection

Wiring and connecting resistance thermometers and resistors

The module provides a constant current at terminals I_{C+} and I_{C-} for current measurements. The constant current is fed to the resistance for measuring its voltage potential. The constant current cables must be wired directly to the resistance thermometer/resistor.

Measurements programmed for 4-or 3-wire connections compensate for line resistance and return considerably higher precision compared to 2-wire connections.

Measurements with programmed 2-wire connections also record line impedance in addition to their internal resistance.

4-wire connection of a resistance thermometer

The voltage generated at the resistance thermometer is measured across the M_+ and M_- terminals. Observe the correct polarity when wiring and connecting the devices (I_{C+} and M_+, and I_{C-} and M- at the resistance thermometer).

Always wire and connect the **I_C+, M+**, **I_C- and M-** lines directly to the resistance thermometer.

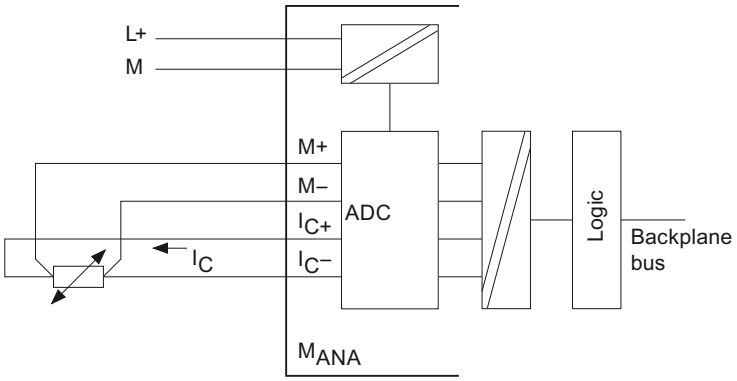

Figure 4-9 4-wire connection of resistance thermometers to an electrically isolated analog input

3-wire connection of a resistance thermometer (not for 6ES7331-7PF01-0AB0)

When connecting 3-wire devices to modules equipped with four terminals, you should generally **bridge M- and I_C-**. Always wire and connect the connected $_C$+ and M+ lines directly to the resistance thermometer.

The image shows the basic wiring. Please observe the notes in the description about the respective module.

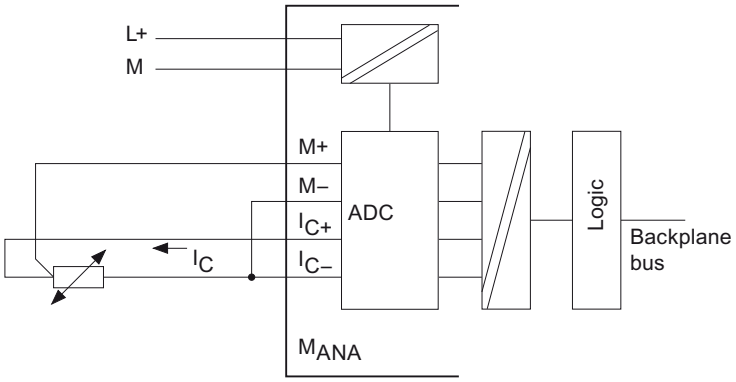

Figure 4-10 3-wire connection of resistance thermometers to an electrically isolated analog input

2-wire connection of a resistance thermometerError! Bookmark not defined.

For 2-wire connections, insert a bridge between the M_+ and I_{C+} and between the **M- and I_C-** terminals of the module. The line impedance is included in the measurement.

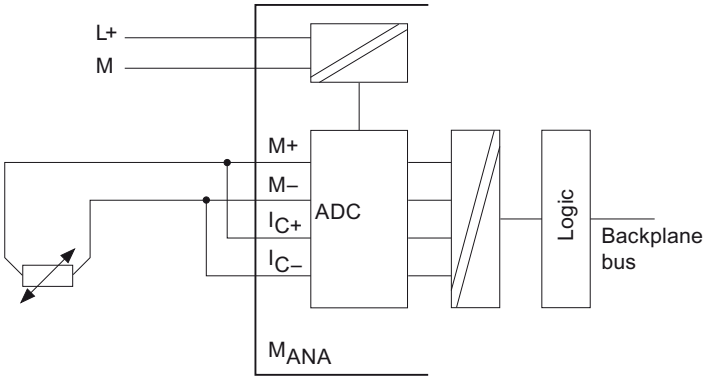

Figure 4-11 2-wire connection of resistance thermometers to an electrically isolated analog input

4.6 Wiring and connecting thermocouples

Introduction

This chapter describes the wiring and connecting of thermocouples and corresponding rules to be observed.

Supported thermocouples (depending on module)

- B; C; E; J; K; L; N; R; S; T; U;
- TXK / XKL GOST

Thermocouple selection

The figure below shows several thermocouples and their temperature ranges.

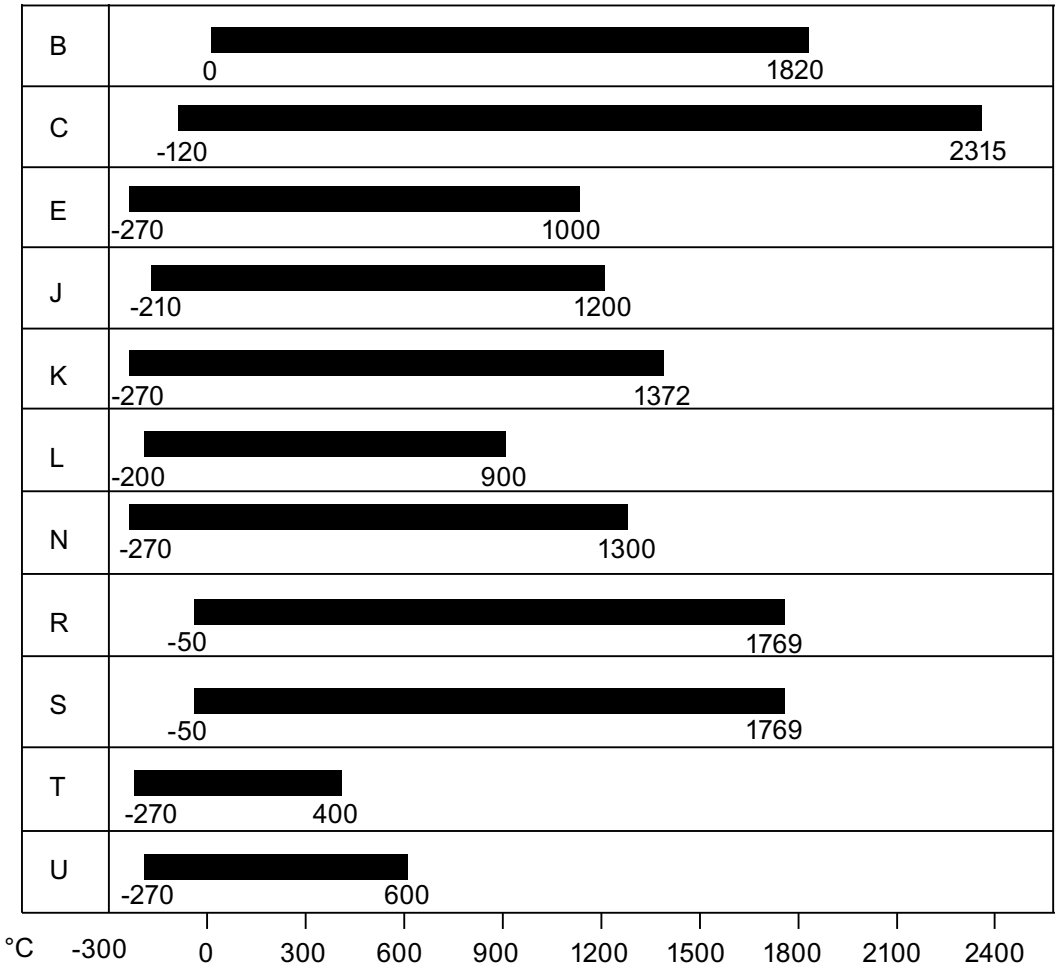

Figure 4-12 Thermocouples and their ranges

Thermocouple structure

Thermocouples consist of a pair of thermal probes and all necessary installation and connecting parts. The thermocouple pair consists of two wires made of different metals, or of metal alloys soldered or welded together at their ends.

The different thermocouple types, for example, K, J or N, are derived from different material compositions. The measuring principle of all thermocouples is the same, irrespective of their type.

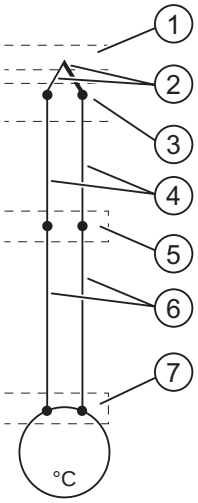

① Measurement point
② Thermocouple with positive and negative thermal elements
③ Terminal
④ Compensating line
⑤ Reference junction
⑥ Supply line
⑦ Thermal voltage acquisition point

Figure 4-13 Fig. 4-22 Structure of thermocouples

Operating principle of thermocouples

Any temperature difference between the measuring point and the free ends of the thermocouple (point of connection) generates a thermoelectric voltage. The thermoelectric voltage is a function of the temperature difference between the measuring point and the free ends, and is also determined by the material composition of the thermal elements.

As thermocouples always sense temperature differences, it is essential to maintain the free ends at the known temperature of a reference junction in order to be able to determine the temperature at the measuring point.

The thermocouples can be extended from their point of connection to the reference junction by means of compensating lines. These compensating lines are made of the same materials as the thermocouple wires. The supply lines from the reference junction to the module are made of copper.

Note

Make sure of the correct polarity in order to avoid serious measuring errors.

Compensation for the reference junction temperature

You can compensate for the influence of temperature fluctuation at the reference junction by means of a compensating circuit.

You have several options of measuring the reference junction temperature in order to obtain an absolute temperature value as a function of the temperature difference between the reference junction and the measuring point.

You can use either an internal or an external compensating circuit, depending on the required location of the reference junction.

Options of compensating for the reference junction temperature

Table 4- 1 Options of compensating for the reference junction temperature

Option	Explanations
No compensation	To record only the temperature difference between the measuring point and reference junction.
Internal compensation (for wiring and connecting, see *Connecting thermocouples with internal compensation box to electrically isolated analog inputs*)	The internal compensation is based on a comparison using the internal temperature (thermocouple internal comparison) of the module.
External compensation with compensation box in the feed lines of each thermocouple (the wiring and connecting is shown in the diagram *Wiring and connecting of thermocouples with compensation box to electrically isolated analog inputs* and *Wiring and connecting of thermocouples with reference junction (order no. M72166-xxx00) to electrically isolated analog inputs*)	You have already measured and compensated for the reference junction temperature (thermocouple external comparison) using an interconnected compensating box in the feed lines of each thermocouple. Further signal processing is not required at the module.
Only for SM 331; AI 8 x TC: External compensation with resistance thermometer for recording the reference junction temperature	You can measure the reference temperature using a (platinum or nickel) resistance thermometer, and compute it in the module for any thermocouple.

See also

Wiring and connecting thermocouples with internal compensation (Page 262)
Wiring and connecting thermocouples with external compensation (Page 263)
Wiring and connecting transducers to analog inputs (Page 248)

4.6.1 Wiring and connecting thermocouples with internal compensation

Function principle of internal compensation

Internal compensation allows you to form the reference point at the terminals of the analog input module. In this case, route the compensating lines directly to the analog module. The internal temperature sensor measures the module's temperature and returns a compensation voltage.

Note that internal compensation is not as accurate as external compensation.

Wiring and connecting thermocouples with internal compensation

Wire the thermocouples either directly to the inputs of the module, or indirectly via compensating lines. Each channel group can use any type of thermocouple supported by the analog module, independently of other channel groups.

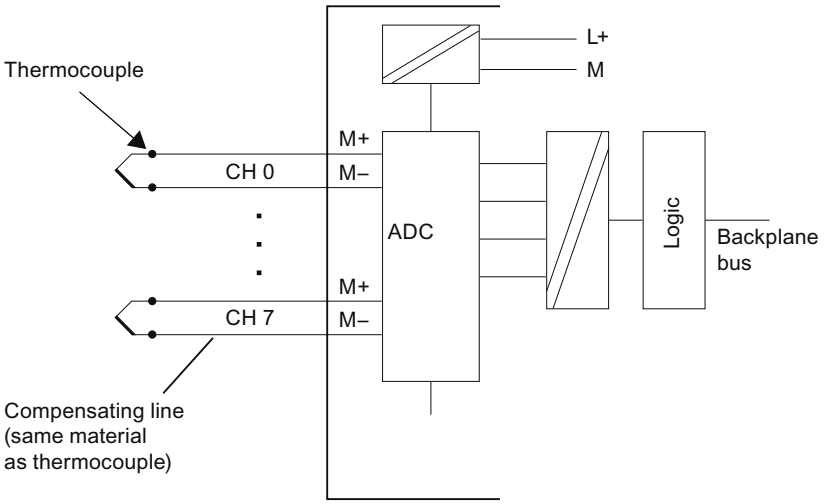

Figure 4-14 Wiring and connecting thermocouples with internal compensation to electrically isolated analog inputs

4.6.2 Wiring and connecting thermocouples with external compensation

Function principle of external compensation with compensating box

With external compensation, the temperature at the reference junction of the thermocouples is evaluated using a compensating box.

The compensating box contains a bridge circuit which is calibrated to a defined reference junction temperature /calibrating temperature.) The reference junction is formed by the connecting ends of the thermocouple's equalizing conductor.

The resistance of the temperature-sensitive bridge changes as a function of the difference between the actual reference temperature and calibrating temperature. This difference induces a positive or negative compensating voltage, which is added to the thermoelectrical voltage.

Wiring and connecting the compensating box

Terminate the compensating box at the COMP terminals of the module; the compensating box must be installed at the reference junction of the thermocouples. The compensating box be supplied with an electrically isolated voltage. The power supply module must provide adequate noise filtering, for example, by means of grounded cable shielding.

The thermocouple terminals on the compensation box are not required, and should be short-circuited (as an example, see the figure *Wiring and connecting thermocouples with reference junction (order no. M72166-xxx00).*

Restrictions:

- The channel group parameters always apply to the all its channels (for example, input voltage, integrating time etc.)
- For external compensation with wiring and connecting of the compensating box to the module's COMP terminals, all thermocouples must be of the same type, and all channels operating with external compensation must use the same type.

Wiring and connecting thermocouples via compensating box

If all thermocouples connected to the module's inputs share a common reference junction, compensate the circuit as follows:

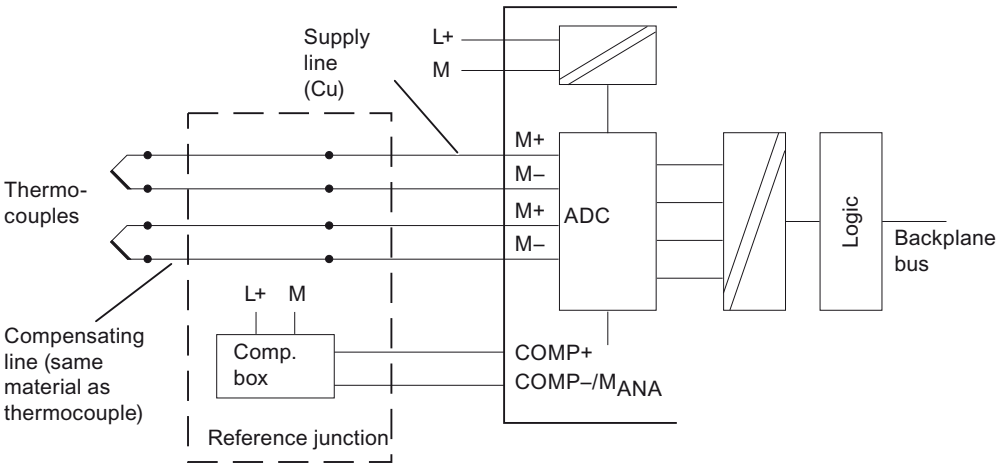

Figure 4-15 Wiring and connecting thermocouples to electrically isolated analog inputs via compensation box

---

Note

To compensate the analog input modules, always use compensation boxes with a **reference junction temperature of 0 °C**.

Recommended compensating box

We recommend the use of a SIEMENS reference junction with integrated power supply unit as a compensating box. The table below shows the relevant ordering data.

Table 4- 2 Ordering data of the reference junction

Recommended compensating box			Order number
Reference junction with integrated power supply unit, for rail mounting			M72166-xxx00
Auxiliary power	220 VAC 24 VAC 24 VDC 110 VAC		B1 B2 B3 B4
Wiring and connecting to thermocouple			
	Fe-CuNi	Type L	1
	Fe/Cu Ni	Type J	2
	Ni Cr/Ni	Type K	3
	Pt 10% Rh/Pt	Type S	4
	Pt 13% Rh/Pt	Type R	5
	Cu/Cu Ni	Type U	6
	Cu/Cu Ni	Type T	7
Reference temperature 0 °C			

Wiring and connecting to the reference junction (order no. M72166-xxx00)

If all thermocouples connected to the module's inputs share a common reference junction, compensate the circuit as follows:

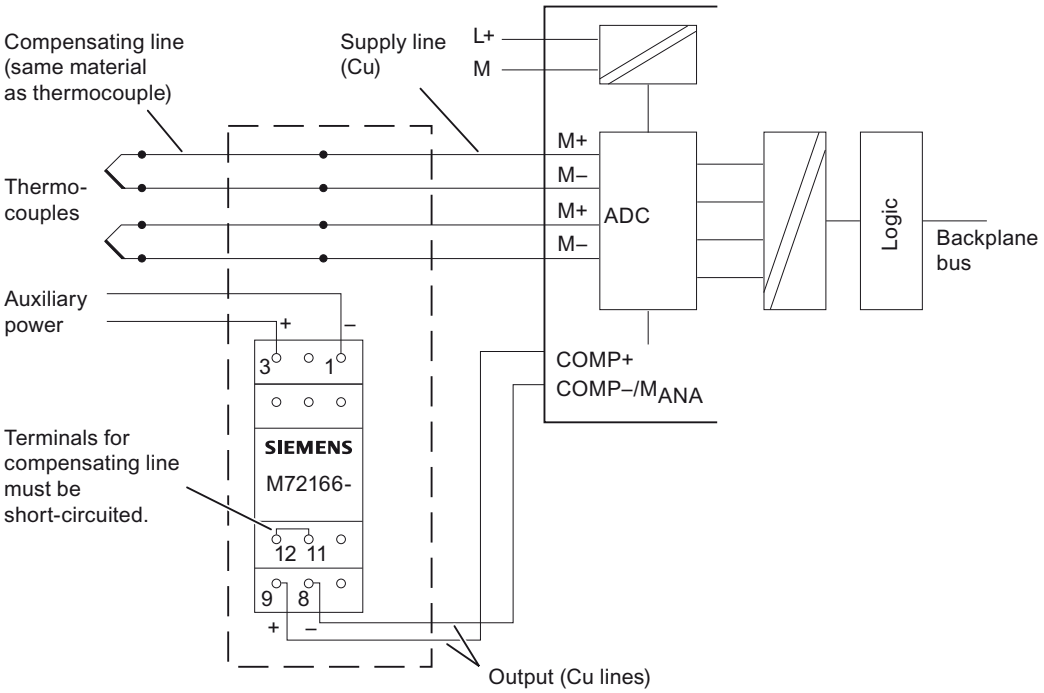

Figure 4-16 Wiring and connecting thermocouples with reference junction (order no. M72166-xxx00)

4.7 Wiring and connecting loads/actuators to analog outputs

Wiring and connecting loads/actuators to analog outputs

The analog output modules can be used as current or voltage source for loads and actuators.

Cables for analog signals

Always use shielded twisted-pair cables to wire analog signals. Form two twisted pairs of the Q_V and S+, and M and S- signals in order to reduce interference. Connect both ends of the analog cable shield to ground.

Any potential difference between the cable ends may cause an equipotential current on the shield and disturbance on analog signals. Avoid this situation by grounding only one end of the shielding.

Electrically isolated analog output modules

Electrically isolated analog output modules do not have a galvanic interconnection between the reference point of measuring circuit M_{ANA} and the CPU's M terminal.

Always use electrically isolated analog input modules if there is any risk of potential difference V_{iso} developing between the reference point of measuring circuit M_{ANA} and the M terminal of the CPU. Use an equipotential bonding conductor to interconnect the M_{ANA} terminal and the M terminal of the CPU, in order to prevent V_{iso} from exceeding the permitted value.

Non-isolated analog output modules

When using on-isolated analog output modules, always interconnect the reference point M_{ANA} of the of measuring circuit with terminal M of the CPU. Wire the M_{ANA} terminal to the M terminal of the CPU. Any potential difference between M_{ANA} and the M terminal of the CPU could otherwise corrupt the analog signal.

4.7.1 Wiring and connecting loads/actuators to voltage outputs

Wiring and connecting loads to a voltage output

The voltage outptus support the wiring and connecting of 2-wire and 4-wire loads. Certain analog output modules, however, do not support both types of wiring and connecting.

Wiring 4-wire loads to the voltage output of an electrically isolated module

The 4-wire load circuit returns high precision. Wiring and connecting the S- and S+ sense lines directly to the load. This allows direct measurement and correction of the load voltage.

Interference or voltage dips may lead to potential differences between the sense line S- and the reference loop of analog circuit M_{ANA}. This potential difference may not exceed set limits. Any potential difference above limits has a negative impact on analog signal precision.

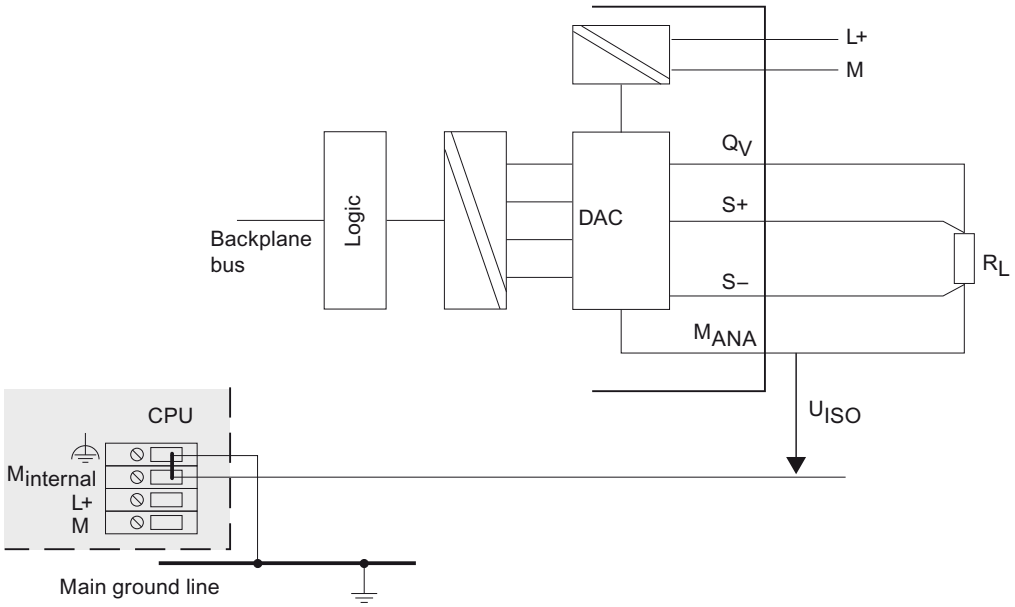

Figure 4-17 4-wire connection of loads to the voltage output of an electrically isolated analog output module

Wiring 2-wire loads to the voltage output of non-isolated module

Wire the loads to the Q_V terminals and to the reference point of measuring circuit M_{ANA}. Interconnect terminal S+ to Q_V with terminal S to M_{ANA} in the front connector.

A 2-wire circuit does not provide for compensation of line impedance.

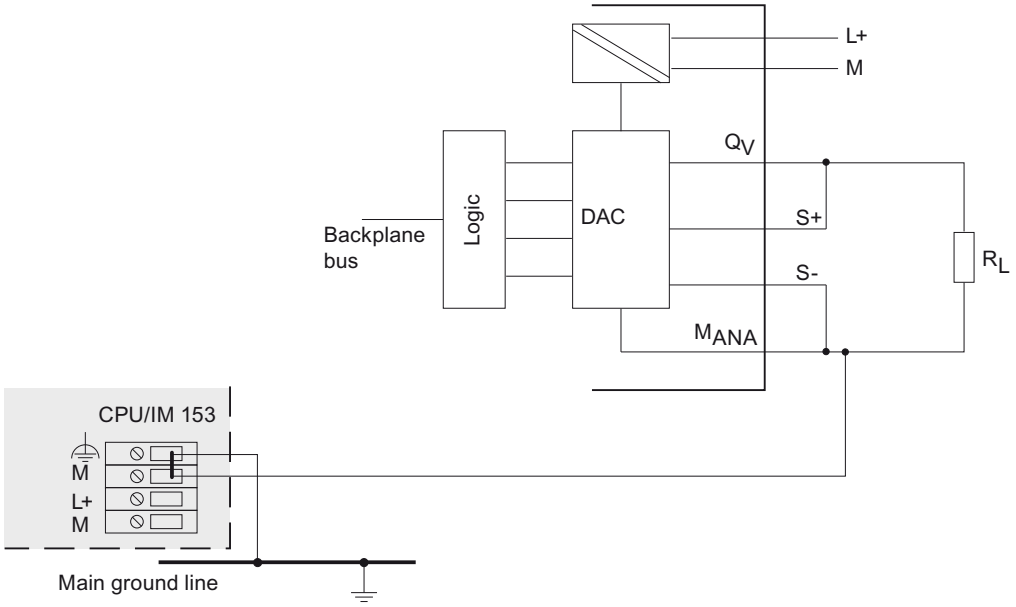

Figure 4-18 2-wire connection of loads to the voltage output of a non-isolated analog module

See also

Wiring and connecting loads/actuators to analog outputs (Page 267)

4.7.2 Wiring and connecting loads/actuators to current outputs

Wiring and connecting loads to a current output

Wire and connect the loads to Q_I and to the reference point of analog circuit M_{ANA} of a current output.

Wiring and connecting loads to a current output of an electrically isolated module

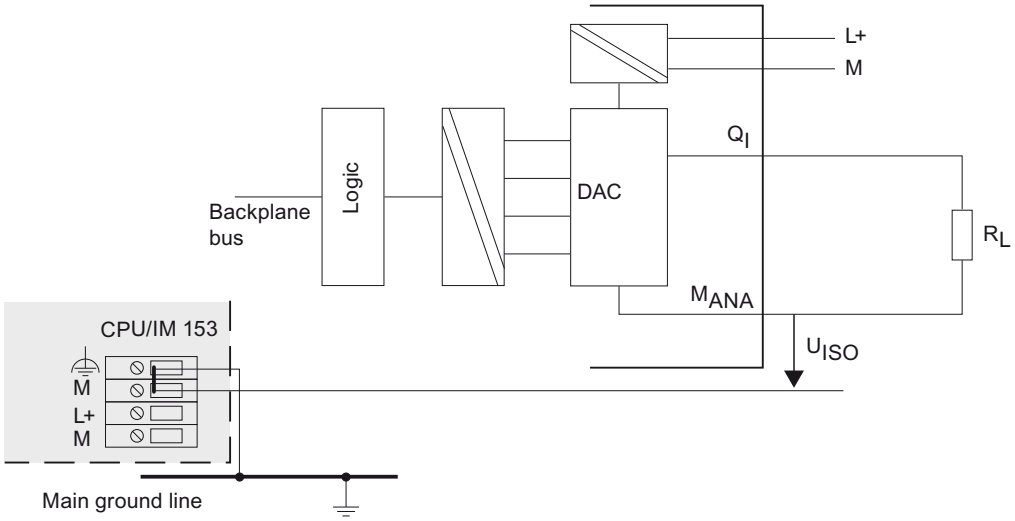

Figure 4-19 Wiring and connecting loads to a current output of an electrically isolated analog output module

Wiring and connecting loads to a current output of a non-isolated analog output module

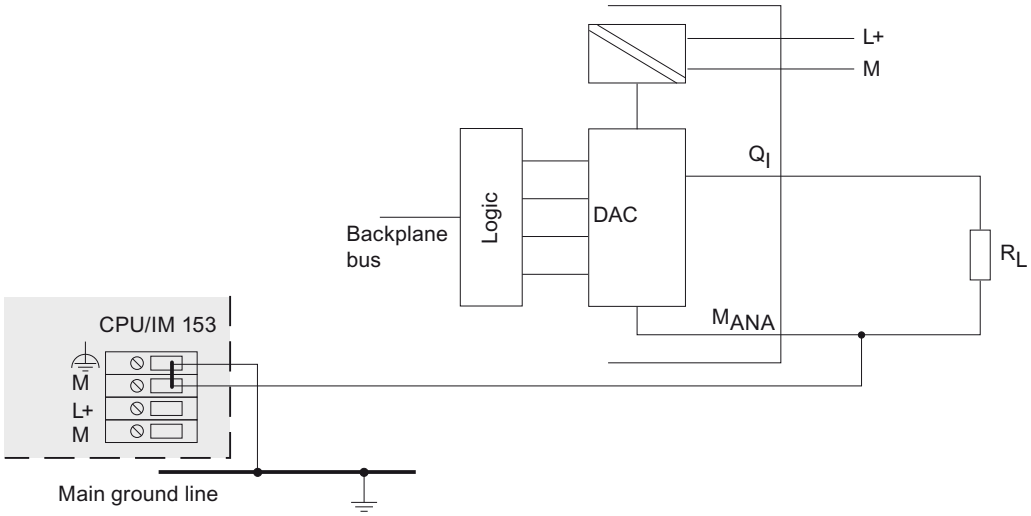

Figure 4-20 Wiring and connecting loads to a current output of a non-isolated analog output module

See also

Wiring and connecting loads/actuators to analog outputs (Page 267)

Principles of analog modules

5

Introduction

This chapter describes the analog values for all measuring or output ranges supported by the analog modules.

Analog value conversion

The CPU always processes the analog values in binary format.

Analog input modules convert the analog process signal to a digital format.

Analog output modules convert digital output values to analog signals.

Representation of analog values at a resolution of 16 bits

The digitized analog value applies to input and output values of the same rated range. Analog values are output as fixed point numbers with two's complement. The resultant assignment:

Bit	15	14	13	12	11	10	9	8	7	6	5	4	3	2	1	0
Bit values	2^{15}	2^{14}	2^{13}	2^{12}	2^{11}	2^{10}	2^{9}	2^{8}	2^{7}	2^{6}	2^{5}	2^{4}	2^{3}	2^{2}	2^{1}	2^{0}

Sign

The sign of the analog value is always set at bit 15:

- "0" → +
- "1" → -

Resolution < 16 bits

On analog modules with a resolution of < 16 bits, the analog value is stored left-aligned. The unused least significant bit positions are padded with zeros ("0".)

Example

The example below demonstrates the zero padding of unused bit positions for low resolution values.

Table 5- 1 Example: Bit pattern of a 16-bit and 13-bit analog value

Resolution	Analog value															
Bit	15	14	13	12	11	10	9	8	7	6	5	4	3	2	1	0
16-bit analog value	0	1	0	0	0	1	1	0	0	1	1	1	0	0	1	1
13-bit analog value	0	1	0	0	0	1	1	0	0	1	1	1	0	0	0	0

5.1 Representation of the values for analog input channels

Measured value resolution

The resolution of the analog values may differ, based on the analog module and module parameters. At resolutions < 15 bits, all bits identified by "x" are set to "0".

Note

This resolution does not apply to temperature values. Converted temperature values are the result of a conversion in the analog module.

Table 5- 2 Supported analog value resolutions

Resolution in bits (+ sign)	Units		Analog value	
	dec	hex	high byte	low byte
8	128	80_H	Sign 0 0 0 0 0 0 0	1 x x x x x x
9	64	40_H	Sign 0 0 0 0 0 0 0	0 1 x x x x x x
10	32	20_H	Sign 0 0 0 0 0 0 0	0 0 1 x x x x x
11	16	10_H	Sign 0 0 0 0 0 0 0	0 0 0 1 x x x x
12	8	8_H	Sign 0 0 0 0 0 0 0	0 0 0 0 1 x x x
13	4	4_H	Sign 0 0 0 0 0 0 0	0 0 0 0 0 1 x x
14	2	2_H	Sign 0 0 0 0 0 0 0	0 0 0 0 0 0 1 x
15	1	1_H	Sign 0 0 0 0 0 0 0	0 0 0 0 0 0 0 1

Binary representation of input ranges

Table 5- 3 Bipolar input ranges

Units	Measured value in %	Data word																Range
		2^{15}	2^{14}	2^{13}	2^{12}	2^{11}	2^{10}	2^{9}	2^{8}	2^{7}	2^{6}	2^{5}	2^{4}	2^{3}	2^{2}	2^{1}	2^{0}	
32767	>118.515	0	1	1	1	1	1	1	1	1	1	1	1	1	1	1	1	Overflow
32511	117.589	0	1	1	1	1	1	1	0	1	1	1	1	1	1	1	1	Overshoot range
27649	>100.004	0	1	1	0	1	1	0	0	0	0	0	0	0	0	0	1	
27648	100.000	0	1	1	0	1	1	0	0	0	0	0	0	0	0	0	0	Rated range
1	0.003617	0	0	0	0	0	0	0	0	0	0	0	0	0	0	0	1	
0	0.000	0	0	0	0	0	0	0	0	0	0	0	0	0	0	0	0	
-1	-0.003617	1	1	1	1	1	1	1	1	1	1	1	1	1	1	1	1	
-27648	-100.000	1	0	0	1	0	1	0	0	0	0	0	0	0	0	0	0	
-27649	≤-100.004	1	0	0	1	0	0	1	1	1	1	1	1	1	1	1	1	Undershoot range
-32512	-117.593	1	0	0	0	0	0	0	1	0	0	0	0	0	0	0	0	
-32768	≤-117.596	1	0	0	0	0	0	0	0	0	0	0	0	0	0	0	0	Underflow

Table 5- 4 Unipolar input ranges

Units	Measured value in %	Data word																Range
		2^{15}	2^{14}	2^{13}	2^{12}	2^{11}	2^{10}	2^{9}	2^{8}	2^{7}	2^{6}	2^{5}	2^{4}	2^{3}	2^{2}	2^{1}	2^{0}	
32767	≥118.515	0	1	1	1	1	1	1	1	1	1	1	1	1	1	1	1	Overflow
32511	117.589	0	1	1	1	1	1	1	0	1	1	1	1	1	1	1	1	Overshoot range
27649	≥100.004	0	1	1	0	1	1	0	0	0	0	0	0	0	0	0	1	
27648	100.000	0	1	1	0	1	1	0	0	0	0	0	0	0	0	0	0	
1	0.003617	0	0	0	0	0	0	0	0	0	0	0	0	0	0	0	1	Rated range
0	0.000	0	0	0	0	0	0	0	0	0	0	0	0	0	0	0	0	
-1	-0.003617	1	1	1	1	1	1	1	1	1	1	1	1	1	1	1	1	Undershoot range
-4864	-17.593	1	1	1	0	1	1	0	1	0	0	0	0	0	0	0	0	
-32768	≤-17.596	1	0	0	0	0	0	0	0	0	0	0	0	0	0	0	0	Underflow

Representation of analog values in voltage measuring ranges

Table 5- 5 Representation of analog values in the ±1 V to ±10 V voltage measuring range

System		Voltage measuring range				
dec	hex	±10 V	±5 V	±2.5 V	±1 V	
32767	7FFF	11.851 V	5.926 V	2.963 V	1.185 V	Overflow
32512	7F00					
32511	7EFF	11.759 V	5.879 V	2.940 V	1.176 V	Overshoot range
27649	6C01					
27648	6C00	10 V	5 V	2.5 V	1 V	Rated range
20736	5100	7.5 V	3.75 V	1.875 V	0.75 V	
1	1	361.7 µV	180.8 µV	90.4 µV	36.17 µV	
0	0	0 V	0 V	0 V	0 V	
-1	FFFF					
-20736	AF00	-7.5 V	-3.75 V	-1.875 V	-0.75 V	
-27648	9400	-10 V	-5 V	-2.5 V	-1 V	
-27649	93FF					Undershoot range
-32512	8100	-11.759 V	-5.879 V	-2.940 V	-1.176 V	
-32513	80FF					Underflow
-32768	8000	-11.851 V	-5.926 V	-2.963 V	-1.185 V	

Table 5- 6 Representation of analog values in the ±80 mV to ±500 mV voltage measuring ranges

System		Voltage measuring range			
dec	hex	±500 mV	±250 mV	±80 mV	
32767	7FFF	592.6 mV	296.3 mV	94.8 mV	Overflow
32512	7F00				
32511	7EFF	587.9 mV	294.0 mV	94.1 mV	Overshoot range
27649	6C01				
27648	6C00	500 mV	250 mV	80 mV	Rated range
20736	5100	375 mV	187.5 mV	60 mV	
1	1	18.08 µV	9.04 µV	2.89 µV	
0	0	0 mV	0 mV	0 mV	
-1	FFFF				
-20736	AF00	-375 mV	-187.5 mV	-60 mV	
-27648	9400	-500 mV	-250 mV	-80 mV	
-27649	93FF				Undershoot range
-32512	8100	-587.9 mV	-294.0 mV	-94.1 mV	
-32513	80FF				Underflow
-32768	8000	-592.6 mV	-296.3 mV	-94.8 mV	

Table 5- 7 Representation of analog values in the 1 V to 5 V and 0 V to 10 V voltage measuring ranges

System		Voltage measuring range		
dec	hex	1 V to 5 V	0 V to 10 V	
32767	7FFF	5.741 V	11.852 V	Overflow
32512	7F00			
32511	7EFF	5.704 V	11.759 V	Overshoot range
27649	6C01			
27648	6C00	5 V	10 V	Rated range
20736	5100	4 V	7.5 V	
1	1	1 V + 144.7 µV	0 V + 361.7 µV	
0	0	1 V	0 V	
-1	FFFF		Negative values are not supported	Undershoot range
-4864	ED00	0.296 V		
-4865	ECFF			Underflow
-32768	8000			

Representation of analog values in the current measuring ranges

Table 5- 8 Representation of analog values in the ±3.2 mA to ±20 mA current measuring ranges

System		Current measuring range			
dec	hex	±20 mA	±10 mA	±3.2 mA	
32767	7FFF	23.70 mA	11.85 mA	3.79 mA	Overflow
32512	7F00				
32511	7EFF	23.52 mA	11.76 mA	3.76 mA	Overshoot range
27649	6C01				
27648	6C00	20 mA	10 mA	3.2 mA	Rated range
20736	5100	15 mA	7.5 mA	2.4 mA	
1	1	723.4 nA	361.7 nA	115.7 nA	
0	0	0 mA	0 mA	0 mA	
-1	FFFF				
-20736	AF00	-15 mA	-7.5 mA	-2.4 mA	
-27648	9400	-20 mA	-10 mA	-3.2 mA	
-27649	93FF				Undershoot range
-32512	8100	-23.52 mA	-11.76 mA	-3.76 mA	
-32513	80FF				Underflow
-32768	8000	-23.70 mA	-11.85 mA	-3.79 mA	

Table 5- 9 Representation of analog values in the 0 mA to 20 mA and 4 mA to 20 mA current measuring ranges

System		Current measuring range		
dec	hex	0 mA to 20 mA	4 mA to 20 mA	
32767	7FFF	23.70 mA	22.96 mA	Overflow
32512	7F00			
32511	7EFF	23.52 mA	22.81 mA	Overshoot range
27649	6C01			
27648	6C00	20 mA	20 mA	Rated range
20736	5100	15 mA	16 mA	
1	1	723.4 nA	4 mA + 578.7 nA	
0	0	0 mA	4 mA	
-1	FFFF			Undershoot range
-4864	ED00	-3.52 mA	1.185 mA	
-4865	ECFF			Underflow
-32768	8000			

Representation of the analog values of resistive transducers

Table 5- 10 Representation of the analog values of 6 kΩ; 10 kΩ and from 150 Ω to 600 Ω resistive transducers

System		Resistive transducer range					
dec	hex	6kΩ	10 kΩ	150 Ω	300 Ω	600 Ω	
32767	7FFF	7.111 kΩ	11.852 kΩ	177.77 Ω	355.54 Ω	711.09 Ω	Overflow
32512	7F00			176.39 Ω	352.78 Ω	705.55 Ω	
32511	7EFF	7.055 kΩ	11.759 kΩ	176.38 Ω	352.77 Ω	705.53 Ω	Overshoot range
27649	6C01						
27648	6C00	6.0 kΩ	10 kΩ	150 Ω	300 Ω	600 Ω	Rated range
20736	5100	4.5 kΩ	7.5 kΩ	112.5 Ω	225 Ω	450 Ω	
1	1	217.0 mΩ	361.7 mΩ	5.43 mΩ	10.85 mΩ	21.70 mΩ	
0	0	0 Ω	0 Ω	0 Ω	0 Ω	0 Ω	
		(negative values are physically impossible)					Undershoot range

Representation of analog values for resistance thermometers Pt x00 and Pt x00 GOST (0.003850) standard

Table 5- 11 Representation of analog values for resistance thermometers PT 100, 200, 500,1000 and PT 10, 50,100, 500 GOST (0.003850) standard

Pt x00 Standard / GOST in °C (1 digit = 0.1°C)	Units		Pt x00 Standard/ GOST in °F (1 digit = 0.1 °F)	Units		Pt x00 Standard/ GOST in K (1 digit = 0.1 K)	Units		Range
	dec	hex		dec	hex		dec	hex	
> 1000.0	32767	$7FFF_H$	> 1832.0	32767	$7FFF_H$	> 1273.2	32767	$7FFF_H$	Overflow
1000.0 : 850.1	10000 : 8501	2710_H : 2135_H	1832.0 : 1562.1	18320 : 15621	4790_H : $3D05_H$	1273.2 : 1123.3	12732 : 11233	$31BC_H$: $2BE1_H$	Overshoot range
850.0 : -200.0	8500 : -2000	2134_H : $F830_H$	1562.0 : -328.0	15620 : -3280	$3D04_H$: $F330_H$	1123.2 : 73.2	11232 : 732	$2BE0_H$: $2DC_H$	Rated range
-200.1 : -243.0	-2001 : -2430	$F82F_H$: $F682_H$	-328.1 : -405.4	-3281 : -4054	$F32F_H$: $F02A_H$	73.1 : 30.2	731 : 302	$2DB_H$: $12E_H$	Undershoot range
< - 243.0	-32768	8000_H	< - 405.4	-32768	8000_H	< 30.2	32768	8000_H	Underflow

Representation of the analog values of Pt x00 GOST (0.003910) standard resistance thermometers

Table 5- 12 Representation of the analog values of Pt 10, 50, 100, 500 GOST (0.003910) standard resistance thermometers

Pt x00 GOST Standard in °C (1 digit = 0.1°C)	Units		Pt x00 GOST Standard in °F (1 digit = 0.1 °F)	Units		Range
	dec	hex		dec	hex	
> 1295.0	32767	$7FFF_H$	> 2363.0	32767	$7FFF_H$	Overflow
1295.0 : 1100.1	12950 : 11001	3296_H : $2AF9_H$	2363.0 : 2012.1	23630 : 20121	$5CE4_H$: $4E99_H$	Overshoot range
1100.0 : -260.0	11000 : -2600	$2AF8_H$: $F5D8_H$	2012.0 : -436.0	20120 : -4360	$4E98_H$: $EEF8_H$	Rated range
-260.1 : -273.2	-2601 : -2732	$F5D7_H$: $F554_H$	-436.1 : -459.7	-4361 : -4597	$EEF7_H$: $EE0B_H$	Undershoot range
< - 273.2	-32768	8000_H	< - 459.7	-32768	8000_H	Underflow

Representation of analog values for Pt x00 and Pt x0 GOST (0.003850 and 0.003910) climatic resistance thermometers

Table 5- 13 Representation of analog values for Pt 100, 200, 500,1000 and Pt 10, 50, 100, 500 GOST (0.003850 and 0.003910) climatic resistance thermometers

Pt x00 climatic/GOST in °C (1 digit = 0.01 °C)	Units		Pt x00 climatic/GOST in °F (1 digit = 0.01 °F)	Units		Range
	dec	hex		dec	hex	
> 155.00	32767	$7FFF_H$	> 311.00	32767	$7FFF_H$	Overflow
155.00 : 130.01	15500 : 13001	$3C8C_H$: $32C9_H$	311.00 : 266.01	31100 : 26601	$797C_H$: $67E9_H$	Overshoot range
130.00 : -120.00	13000 : -12000	$32C8_H$: $D120_H$	266.00 : -184.00	26600 : -18400	$67E8_H$: $B820_H$	Rated range
-120.01 : -145.00	-12001 : -14500	$D11F_H$: $C75C_H$	-184.01 : -229.00	-18401 : -22900	$B81F_H$: $A68C_H$	Undershoot range
< - 145.00	-32768	8000_H	< - 229.00	-32768	8000_H	Underflow

Representation of the analog values of Ni x00 Standard resistance thermometers

Table 5- 14 Representation of the analog values of Ni100, 120, 200, 500, 1000 and LG-Ni 1000 resistance thermometers

Ni x00 Standard in °C (1 digit = 0.1°C)	Units		Ni x00 Standard in °F (1 digit = 0.1 °F)	Units		Ni x00 standard in K (1 digit = 0.1 K)	Units		Range
	dec	hex		dec	hex		dec	hex	
> 295.0	32767	$7FFF_H$	> 563.0	32767	$7FFF_H$	> 568.2	32767	$7FFF_H$	Overflow
295.0 : 250.1	2950 : 2501	$B86_H$: $9C5_H$	563.0 : 482.1	5630 : 4821	$15FE_H$: $12D5_H$	568.2 : 523.3	5682 : 5233	1632_H : 1471_H	Overshoot range
250.0 : -60.0	2500 : -600	$9C4_H$: $FDA8_H$	482.0 : -76.0	4820 : -760	$12D4_H$: $FD08_H$	523.2 : 213.2	5232 : 2132	1470_H : 854_H	Rated range
-60.1 : -105.0	-601 : -1050	$FDA7_H$: $FBE6_H$	-76.1 : -157.0	-761 : -1570	$FD07_H$: $F9DE_H$	213.1 : 168.2	2131 : 1682	853_H : 692_H	Undershoot range
< -105.0	-32768	8000_H	< -157.0	-32768	8000_H	< 168.2	32768	8000_H	Underflow

Representation of the analog values of Ni x00 climate resistance thermometers

Table 5- 15 Representation of the analog values of Ni 100, 120, 200, 500, 1000 and LG-Ni 1000 resistance thermometers

Ni x00 climatic in °C (1 digit = 0.01 °C)	Units		Ni x00 climatic in °F (1 digit = 0.01 °F)	Units		Range
	dec	hex		dec	hex	
> 295.00	32767	$7FFF_H$	> 327.66	32767	$7FFF_H$	Overflow
295.00 : 250.01	29500 : 25001	$733C_H$: $61A9_H$	327.66 : 280.01	32766 : 28001	$7FFE_H$: $6D61_H$	Overshoot range
250.00 : -60.00	25000 : -6000	$61A8_H$: $E890_H$	280.00 : -76.00	28000 : -7600	$6D60_H$: $E250_H$	Rated range
-60.01 : -105.00	-6001 : -10500	$E88F_H$: $D6FC_H$	-76.01 : -157.00	-7601 : -15700	$E24F_H$: $C2AC_H$	Undershoot range
< - 105.00	-32768	8000_H	< - 157.00	-32768	8000_H	Underflow

Representation of the analog values of Ni 100 GOST Standard resistance thermometers

Table 5- 16 Representation of the analog values of Ni 100 GOST Standard resistance thermometers

Ni 100 GOST Standard in °C (1 digit = 0.1°C)	Units		Ni 100 GOST Standard in °F (1 digit = 0.1 °F)	Units		Range
	dec	hex		dec	hex	
> 212.4	32767	$7FFF_H$	> 414.3	32767	$7FFF_H$	Overflow
212.4 : 180.1	2124 : 1801	$084C_H$: 0709_H	414.3 : 356.1	4143 : 3561	$102F_H$: $0DE9_H$	Overshoot range
180.0 : -60.0	1800 : -600	0708_H : $FDA8_H$	356.0 : -76.0	3560 : -760	$0DE8_H$: $FD08_H$	Rated range
-60.1 : -105.0	-601 : -1050	$FDA7_H$: $FBE6_H$	-76.1 : -157.0	-761 : -1570	$FD07_H$: $F9DE_H$	Undershoot range
< - 105.0	-32768	8000_H	< - 157.0	-32768	8000_H	Underflow

Representation of the analog values of Ni 100 GOST Klima resistance thermometers

Table 5- 17 Representation of the analog values of Ni 100 GOST Klima resistance thermometers

Ni 100 GOST Klima in °C (1 digit = 0.1°C)	Units		Ni 100 GOST Klima in °F (1 digit = 0.1 °F)	Units		Range
	dec	hex		dec	hex	
> 212.40	32767	$7FFF_H$	> 327.66	32767	$7FFF_H$	Overflow
212.40 : 180.01	21240 : 18001	$52F8_H$: 4651_H	327.66 : 280.01	32766 : 28001	$7FFE_H$: $6D61_H$	Overshoot range
180.00 : -60.00	18000 : -6000	4650_H : $E890_H$	280.00 : -76.00	28000 : -7600	$6D60_H$: $E250_H$	Rated range
-60.01 : -105.00	-6001 : -10500	$E88F_H$: $D6FC_H$	-76.01 : -157.00	-7601 : -15700	$E24F_H$: $C2AC_H$	Undershoot range
< - 105.00	-32768	8000_H	< - 157.00	-32768	8000_H	Underflow

Representation of the analog values for Cu 10 standard resistance thermometers

Table 5- 18 Representation of the analog values for Cu 10 standard resistance thermometers

Cu 10 standard in °C (1 digit = 0.01 °C)	Units		Cu 10 standard in °F (1 digit = 0.01 °F)	Units		Cu 10 standard in K (1 digit = 0.01 K)	Units		Range
	dec	hex		dec	hex		dec	hex	
> 312.0	32767	$7FFF_H$	> 593.6	32767	$7FFF_H$	> 585.2	32767	$7FFF_H$	Overflow
312.0 : 260.1	3120 : 2601	$C30_H$: $A29_H$	593.6 : 500.1	5936 : 5001	1730_H : $12D5_H$	585.2 : 533.3	5852 : 5333	$16DC_H$: $14D5_H$	Overshoot range
260.0 : -200.0	2600 : -2000	$A28_H$: $F830_H$	500.0 : -328.0	5000 : -3280	1389_H : $F330_H$	533.2 : 73.2	5332 : 732	$14D4_H$: $2DC_H$	Rated range
-200.1 : -240.0	-2001 : -2400	$F82F_H$: $F6A0_H$	-328.1 : -400.0	-3281 : -4000	$F32F_H$: $F060_H$	73.1 : 33.2	731 : 332	$2DB_H$: $14C_H$	Undershoot range
< - 240.0	-32768	8000_H	< - 400.0	-32768	8000_H	< 33.2	32768	8000_H	Underflow

Representation of analog values for Cu 10 climatic and Cu 10, 50, 100 GOST climatic resistance thermometers

Table 5- 19 Representation of analog values for Cu 10 climatic and Cu 10, 50, 100 GOST climatic resistance thermometers

Cu x0 climatic/in °C (1 digit = 0.01 °C)	Units		Cu x0 climatic in °F (1 digit = 0.01 °F)	Units		Range
	dec	hex		dec	hex	
> 180.00	32767	$7FFF_H$	> 327.66	32767	$7FFF_H$	Overflow
180.00 : 150.01	18000 : 15001	4650_H : $3A99_H$	327.66 : 280.01	32766 : 28001	$7FFE_H$: $6D61A_H$	Overshoot range
150.00 : -50.00	15000 : -5000	$3A98_H$: $EC78_H$	280.00 : - 58.00	28000 : -5800	$6D60_H$: $E958_H$	Rated range
-50.01 : -60.00	-5001 : -6000	$EC77_H$: $E890_H$	-58.01 : -76.00	-5801 : -7600	$E957_H$: $E250_H$	Undershoot range
< - 60.00	-32768	8000_H	< - 76.00	-32768	8000_H	Underflow

Representation of analog values for Cu 10, 50, 100, 500 GOST standard (0.00426) resistance thermometers

Table 5- 20 Representation of analog values for Cu 10, 50, 100, 500 GOST standard (0.00426) resistance thermometers

Cu x0 Standard in °C (1 digit = 0.1°C)	Units		Cu x0 standard in °F (1 digit = 0.01 °F)	Units		Range
	dec	hex		dec	hex	
> 240.0	32767	$7FFF_H$	> 464.0	32767	$7FFF_H$	Overflow
240.0 : 200.1	2400 : 2001	0960_H : $07D1_H$	464.0 : 392.1	4640 : 3921	1220_H : $0F51_H$	Overshoot range
200.0 : -50.0	2000 : -500	$07D0_H$: $FE0C_H$	392.0 : -58.0	3920 : -580	$0F50_H$: $FDBC_H$	Rated range
-50.1 : -60.0	-501 : -600	$FE0B_H$: $FDA8_H$	-58.1 : -76.0	-581 : -760	$FDBB_H$: $FD08_H$	Undershoot range
< - 60.00	-32768	8000_H	< - 76.0	-32768	8000_H	Underflow

Representation of the analog values for Cu 10, 50, 100, 500 GOST standard (0.00428) resistance thermometers

Table 5- 21 Representation of the analog values for Cu 10, 50, 100, 500 GOST standard (0.00428) resistance thermometers

Cu x0 standard in °C (1 digit = 0.01 °C)	Units		Cu x0 standard in °F (1 digit = 0.01 °F)	Units		Range
	dec	hex		dec	hex	
> 240.0	32767	$7FFF_H$	> 464.0	32767	$7FFF_H$	Overflow
240.0 : 200.1	2400 : 2001	0960_H : $07D1_H$	464.0 : 392.1	4640 : 3921	1220_H : $0F51_H$	Overshoot range
200.0 : -200.0	2000 : -2000	$07D0_H$: $F830_H$	392.0 : -328.0	3920 : -3280	$0F50_H$: $F330_H$	Rated range
-200.1 : -240.0	-2001 : -2400	$F82F_H$: $F6A0_H$	-328.1 : -405.4	-3281 : -4054	$F32F_H$: $F02A_H$	Undershoot range
< - 240.0	-32768	8000_H	< - 405.4	-32768	8000_H	Underflow

Representation of analog values for KTY83/110 silicon temperature sensors

Table 5- 22 Representation of analog values for KTY83/110 silicon temperature sensors

KTY83/110 in °C (1 digit = 0.1 °C)	Units		KTY83/110 in °F (1 digit = 0.1 °F)	Units		KTY83/110 in °K (1 digit = 0.1 °K)	Units		Range
	dec	hex		dec	hex		dec	hex	
> 206.3	32767	$7FFF_H$	> 403.3	32767	$7FFF_H$	> 479.5	32767	$7FFF_H$	Overflow
206.3 : 175.1	2063 : 1751	$080F_H$: $06D7_H$	403.3 : 347.1	4033 : 3471	$0FC1_H$: $0D8F_H$	479.5 : 448.3	4795 : 4483	$12BB_H$: 1183_H	Overshoot range
175 : -55	1750 : -550	$06D6_H$: $FDDA_H$	347 : -67	3470 : -670	$0D8E_H$: $FD62_H$	448.2 : 218.2	4482 : 2182	1182_H : 0886_H	Rated range
-55.1 : -64.7	-551 : -647	$FDD9_H$: $FD79_H$	-67.1 : -84.5	-671 : -845	$FD61_H$: $FCB3_H$	218.1 : 208.5	2181 : 2085	0885_H : 08205_H	Undershoot range
< -64.7	-32768	8000_H	< -84.5	-32768	8000_H	< 208.5	-32768	8000_H	Underflow

Representation of analog values for KTY84/130 silicon temperature sensors

Table 5- 23 Representation of analog values for KTY84/130 silicon temperature sensors

KTY84/130 in °C (1 digit = 0.1 °C)	Units		KTY84/130 in °F (1 digit = 0.1 °F)	Units		KTY84/130 in °K (1 digit = 0.1 °K)	Units		Range
	dec	hex		dec	hex		dec	hex	
> 352.8	32767	$7FFF_H$	> 667.0	32767	$7FFF_H$	> 626.0	32767	$7FFF_H$	Overflow
352.8 : 300.1	3528 : 3001	$0DC8_H$: $0BB9_H$	667.0 : 572.1	6670 : 5721	$1A0E_H$: 1659_H	626.0 : 573.3	6260 : 5733	1874_H : 1665_H	Overshoot range
300 : -40	3000 : -400	$0BB8_H$: $FE70_H$	572 : -40	5720 : -400	1658_H : $FE70_H$	573.2 : 233.2	5732 : 2332	1664_H : $091C_H$	Rated range
-40.1 : -47.0	-401 : -470	$FE6F_H$: $FE2A_H$	-40.1 : -52.6	-401 : -526	$FE6F_H$: $FDF2_H$	233.1 : 226.2	2331 : 2262	$091B_H$: $08D6_H$	Undershoot range
< -47.0	-32768	8000_H	< -52.6	-32768	8000_H	< 226.2	-32768	8000_H	Underflow

Representation of the analog values of thermocouples type B

Table 5- 24 Representation of the analog values of thermocouples type B

Type B in °C	Units		Type B in °F	Units		Type B in K	Units		Range
	dec	hex		dec	hex		dec	hex	
> 2070.0	32767	$7FFF_H$	> 3276.6	32767	$7FFF_H$	> 2343.2	32767	$7FFF_H$	Overflow
2070.0 : 1820.1	20700 : 18201	$50DC_H$: 4719_H	3276.6 : 2786.6	32766 : 27866	$7FFE_H$: $6CDA_H$	2343.2 : 2093.3	23432 : 20933	$5B88_H$: $51C5_H$	Overshoot range
1820.0 : 0.0	18200 : 0	4718_H : 0000_H	2786.5 : 32.0	27865 : 320	$6CD9_H$: 0140_H	2093.2 : 273.2	20932 : 2732	$51C4_H$: $0AAC_H$	Rated range
: -120.0	: -1200	: $FB50_H$	: -184.0	: -1840	: $F8D0_H$	: 153.2	: 1532	: $05FC_H$	Undershoot range
< -120.0	-32768	8000_H	< -184.0	-32768	8000_H	< 153.2	32768	8000_H	Underflow

Representation of the analog values of thermocouples type C

Table 5- 25 Representation of the analog values of thermocouples type C

Type C in °C	Units		Type C in °F	Units		Range
	dec	hex		dec	hex	
> 2500.0	32767	$7FFF_H$	> 3276.6	32767	$7FFF_H$	Overflow
2500.0 : 2315.1	25000 : 23151	$61A8_H$: $5A6F_H$	3276.6 : 2786.6	32766 : 27866	$7FFE_H$: $6CDA_H$	Overshoot range
2315.0 : 0.0	23150 : 0	$5A6E_H$: 0000_H	2786.5 : 32.0	27865 : 320	$6CD9_H$: 0140_H	Rated range
-0.1 : -120.0	-1 : -1200	$FFFF_H$: $FB50_H$	31.9 : -184.0	319 : -1840	$013F_H$: $F8D0_H$	Undershoot range
< -120.0	-32768	8000_H	< -184.0	-32768	8000_H	Underflow

Representation of the analog values of thermocouples type E

Table 5- 26 Representation of the analog values of thermocouples type E

Type E in °C	Units		Type E in °F	Units		Type E in K	Units		Range
	dec	hex		dec	hex		dec	hex	
> 1200.0	32767	$7FFF_H$	> 2192.0	32767	$7FFF_H$	> 1473.2	32767	$7FFF_H$	Overflow
1200.0 : 1000.1	12000 : 10001	$2EE0_H$: 2711_H	2192.0 : 1832.2	21920 : 18322	$55A0_H$: 4792_H	1473.2 : 1273.3	14732 : 12733	$398C_H$: $31BD_H$	Overshoot range
1000.0 : -270.0	10000 : -2700	2710_H : $F574_H$	1832.0 : -454.0	18320 : -4540	4790_H : $EE44_H$	1273.2 : 0	12732 : 0	$31BC_H$: 0000_H	Rated range
< -270.0	< -2700	< $F574_H$	< -454.0	< -4540	<$EE44_H$	<0	<0	<0000_H	Underflow
Faulty wiring (polarity reversal, or open inputs, for example), or sensor error in the negative range (wrong type of thermocouple, for example) will cause the analog input module to signal underflow, starting at...									
... $F0C4_H$ and outputs the value $8{,}000_H$.			... $FB70_H$ and outputs the value $8{,}000_H$.			... $E5D4_H$ and outputs the value $8{,}000_H$.			

Representation of the analog values of thermocouples type J

Table 5- 27 Representation of the analog values of thermocouples type J

Type J in °C	Units		Type J in °F	Units		Type J in K	Units		Range
	dec	hex		dec	hex		dec	hex	
> 1450.0	32767	$7FFF_H$	> 2642.0	32767	$7FFF_H$	> 1723.2	32767	$7FFF_H$	Overflow
1450.0 : 1200.1	14500 : 12001	$38A4_H$: $2EE1_H$	2642.0 : 2192.2	26420 : 21922	6734_H : $55A2_H$	1723.2 : 1473.3	17232 : 14733	4350_H : $398D_H$	Overshoot range
1200.0 : -210.0	12000 : -2100	$2EE0_H$: $F7CC_H$	2192.0 : -346.0	21920 : -3460	$55A0_H$: $F27C_H$	1473.2 : 63.2	14732 : 632	$398C_H$: 0278_H	Rated range
< -210.0	< -2100	<$F7CC_H$	< -346.0	< -3460	<$F27C_H$	< 63.2	< 632	< 0278_H	Underflow
Faulty wiring (polarity reversal, or open inputs, for example), or sensor error in the negative range (wrong type of thermocouple, for example) will cause the analog input module to signal underflow, starting at ...									
... $F31C_H$ and outputs the value 8000_H.			... $EA0C_H$ and outputs the value 8000_H.			... $FDC8_H$ and outputs the value 8000_H.			

Representation of the analog values of thermocouples type K

Table 5- 28 Representation of the analog values of thermocouples type K

Type K in °C	Units		Type K in °F	Units		Type K in K	Units		Range
	dec	hex		dec	hex		dec	hex	
> 1622.0	32767	$7FFF_H$	> 2951.6	32767	$7FFF_H$	> 1895.2	32767	$7FFF_H$	Overflow
1622.0 : 1372.1	16220 : 13721	$3F5C_H$: 3599_H	2951.6 : 2501.8	29516 : 25018	$734C_H$: $61BA_H$	1895.2 : 1645.3	18952 : 16453	$4A08_H$: 4045_H	Overshoot range
1372.0 : -270.0	13720 : -2700	3598_H : $F574_H$	2501.6 : -454.0	25061 : -4540	$61B8_H$: $EE44_H$	1645.2 : 0	16452 : 0	4044_H : 0000_H	Rated range
< -270.0	< -2700	< $F574_H$	< -454.0	< -4540	<$EE44_H$	< 0	< 0	< 0000_H	Underflow
Faulty wiring (polarity reversal, or open inputs, for example), or sensor error in the negative range (wrong type of thermocouple, for example) will cause the analog input module to signal underflow, starting at ...									
... $F0C4_H$ and outputs the value $8,000_H$.			... $E5D4_H$ and outputs the value $8,000_H$.			... $FB70_H$ and outputs the value $8,000_H$.			

Representation of the analog values of thermocouples type L

Table 5- 29 Representation of the analog values of thermocouples type L

Type L in °C	Units		Type L in °F	Units		Type L in K	Units		Range
	dec	hex		dec	hex		dec	hex	
> 1150.0	32767	$7FFF_H$	> 2102.0	32767	$7FFF_H$	> 1423.2	32767	$7FFF_H$	Overflow
1150.0 : 900.1	11500 : 9001	$2CEC_H$: 2329_H	2102.0 : 1652.2	21020 : 16522	$521C_H$: $408A_H$	1423.2 : 1173.3	14232 : 11733	3798_H : $2DD5_H$	Overshoot range
900.0 : -200.0	9000 : -2000	2328_H : $F830_H$	1652.0 : -328.0	16520 : -3280	4088_H : $F330_H$	1173.2 : 73.2	11732 : 732	$2DD4_H$: $02DC_H$	Rated range
< -200.0	< -2000	< $F830_H$	< -328.0	< -3280	< $F330_H$	< 73.2	< 732	<$02DC_H$	Underflow
Faulty wiring (polarity reversal, or open inputs, for example), or sensor error in the negative range (wrong type of thermocouple, for example) will cause the analog input module to signal underflow, starting at ...									
... $F380_H$ and outputs the value 8000_H.			... $EAC0_H$ and outputs the value 8000_H.			... $FE2C_H$ and outputs the value 8000_H.			

Representation of the analog values of thermocouples type N

Table 5- 30 Representation of the analog values of thermocouples type N

Type N in °C	Units		Type N in °F	Units		Type N in K	Units		Range
	dec	hex		dec	hex		dec	hex	
> 1550.0	32767	$7FFF_H$	> 2822.0	32767	$7FFF_H$	> 1823.2	32767	$7FFF_H$	Overflow
1550.0 : 1300.1	15500 : 13001	$3C8C_H$: $32C9_H$	2822.0 : 2372.2	28220 : 23722	$6E3C_H$: $5CAA_H$	1823.2 : 1573.3	18232 : 15733	4738_H : $3D75_H$	Overshoot range
1300.0 : -270.0	13000 : -2700	$32C8_H$: $F574_H$	2372.0 : -454.0	23720 : -4540	$5CA8_H$: $EE44_H$	1573.2 : 0	15732 : 0	$3D74_H$: 0000_H	Rated range
< -270.0	< -2700	< $F574_H$	< -454.0	< -4540	<$EE44_H$	< 0	< 0	< 0000_H	Underflow
Faulty wiring (polarity reversal, or open inputs, for example), or sensor error in the negative range (wrong type of thermocouple, for example) will cause the analog input module to signal underflow, starting at ...									
... $F0C4_H$ and outputs the value $8,000_H$.			... $E5D4_H$ and outputs the value $8,000_H$.			... $FB70_H$ and outputs the value $8,000_H$.			

Representation of the analog values of thermocouples type R, S

Table 5- 31 Representation of the analog values of thermocouples type R, S

Type R, S in °C	Units		Type R, S in °F	Units		Types R, S in K	Units		Range
	dec	hex		dec	hex		dec	hex	
> 2019.0	32767	$7FFF_H$	> 3276.6	32767	$7FFF_H$	> 2292.2	32767	$7FFF_H$	Overflow
2019. : 1769.1	20190 : 17691	$4EDE_H$: $451B_H$	3276.6 : 3216.4	32766 : 32164	$7FFE_H$: $7DA4_H$	2292.2 : 2042.3	22922 : 20423	$598A_H$: $4FC7_H$	Overshoot range
1769.0 : -50.0	17690 : -500	$451A_H$: $FE0C_H$	3216.2 : -58.0	32162 : -580	$7DA2_H$: $FDBC_H$	2042.2 : 223.2	20422 : 2232	$4FC6_H$: $08B8_H$	Rated range
-50.1 : -170.0	-501 : -1700	$FE0B_H$: $F95C_H$	-58.0 : -274.0	-582 : -2740	$FDBA_H$: $F54C_H$	223.1 : 103.2	2231 : 1032	$08B7_H$: 0408_H	Undershoot range
< -170.0	-32768	8000_H	< -274.0	-32768	8000_H	< 103.2	< 1032	8000_H	Underflow

Representation of the analog values of thermocouples type T

Table 5- 32 Representation of the analog values of thermocouples type T

Type T in °C	Units		Type T in °F	Units		Type T in K	Units		Range
	dec	hex		dec	hex		dec	hex	
> 540.0	32767	$7FFF_H$	> 1004.0	32767	$7FFF_H$	> 813.2	32767	$7FFF_H$	Overflow
540.0 : 400.1	5400 : 4001	1518_H : $0FA1_H$	1004.0 : 752.2	10040 : 7522	2738_H : $1D62_H$	813.2 : 673.3	8132 : 6733	$1FC4_H$: $1AAD_H$	Overshoot range
400.0 : -270.0	4000 : -2700	$0FA0_H$: $F574_H$	752.0 : -454.0	7520 : -4540	$1D60_H$: $EE44_H$	673.2 : 3.2	6732 : 32	$1AAC_H$: 0020_H	Rated range
< -270.0	< -2700	< $F574_H$	< -454.0	< -4540	<$EE44_H$	< 3.2	< 32	< 0020_H	Underflow
Faulty wiring (polarity reversal, or open inputs, for example), or sensor error in the negative range (wrong type of thermocouple, for example) will cause the analog input module to signal underflow, starting at ...									
... $F0C4_H$ and outputs the value $8{,}000_H$.			... $E5D4_H$ and outputs the value $8{,}000_H$.			... $FB70_H$ and outputs the value $8{,}000_H$.			

Representation of the analog values of thermocouples type U

Table 5- 33 Representation of the analog values of thermocouples type U

Type U in °C	Units		Type U in °F	Units		Type U in K	Units		Range
	dec	hex		dec	hex		dec	hex	
> 850.0	32767	$7FFF_H$	> 1562.0	32767	$7FFF_H$	> 1123.2	32767	$7FFF_H$	Overflow
850.0 : 600.1	8500 : 6001	2134_H : 1771_H	1562.0 : 1112.2	15620 : 11122	2738.0_H : $2B72_H$	1123.2 : 873.2	11232 : 8732	$2BE0_H$: $221C_H$	Overshoot range
600.0 : -200.0	6000 : -2000	1770_H : $F830_H$	1112.0 : -328.0	11120 : -3280	$2B70_H$: $F330_H$	873.2 : 73.2	8732 : 732	$221C_H$: $02DC_H$	Rated range
< -200.0	< -2000	< $F830_H$	< -328.0	< -3280	< $F330_H$	< 73.2	< 732	<$02DC_H$	Underflow
Faulty wiring (polarity reversal, or open inputs, for example), or sensor error in the negative range (wrong type of thermocouple, for example) will cause the analog input module to signal underflow, starting at ...									
... $F380_H$ and outputs the value 8000_H.			... $EAC0_H$ and outputs the value 8000_H.			... $FE2C_H$ and outputs the value 8000_H.			

Representation of analog values for type TXK/XKL GOST thermocouple

Table 5- 34 Representation of analog values for type TXK/XKL GOST thermocouple

Type TXK/XKL in °C	Units		Type TXK/XKL in °F	Units		Range
	dec	hex		dec	hex	
> 1050.0	32767	$7FFF_H$	> 1922.0	32767	$7FFF_H$	Overflow
1050.0 : 800.1	8500 : 8001	2904_H : $1F41_H$	1922.0 : 1472.1	19220 : 14721	$4B14_H$: 3981_H	Overshoot range
800.0 : 0.0 : -200.0	8000 : 0 : -2000	$1F40_H$: 0000_H : $F830_H$	1472.0 : 32.0 : -328.0	14720 : 320 : -3280	3980_H : 0140_H : $F330_H$	Rated range
< -200.0	<-32768	< $F8000_H$	< -328.0	<-32768	8000_H	Underflow

5.2 Representation of analog values for analog output channels

Binary representation of output ranges

Table 5- 35 Bipolar output ranges

		2^{15}	2^{14}	2^{13}	2^{12}	2^{11}	2^{10}	2^{9}	2^{8}	2^{7}	2^{6}	2^{5}	2^{4}	2^{3}	2^{2}	2^{1}	2^{0}	
≥32512	0 %	0	1	1	1	1	1	1	1	x	x	x	x	x	x	x	x	Overflow
32511	117,589	0	1	1	1	1	1	1	0	1	1	1	1	1	1	1	1	Overshoot range
27649	≥100,004	0	1	1	0	1	1	0	0	0	0	0	0	0	0	0	1	
27648	100,000	0	1	1	0	1	1	0	0	0	0	0	0	0	0	0	0	Rated range
1	0,003617	0	0	0	0	0	0	0	0	0	0	0	0	0	0	0	1	
0	0,000	0	0	0	0	0	0	0	0	0	0	0	0	0	0	0	0	
-1	-0,003617	1	1	1	1	1	1	1	1	1	1	1	1	1	1	1	1	
-27648	-100,000	1	0	0	1	0	1	0	0	0	0	0	0	0	0	0	0	
-27649	≤100,004	1	0	0	1	0	0	1	1	1	1	1	1	1	1	1	1	Undershoot range
-32512	-117,593	1	0	0	0	0	0	0	1	0	0	0	0	0	0	0	0	
≤-32513	0 %	1	0	0	0	0	0	0	0	x	x	x	x	x	x	x	x	Underflow

Table 5- 36 Unipolar output ranges

Units	Output value in %	Data word																Range
		2^{15}	2^{14}	2^{13}	2^{12}	2^{11}	2^{10}	2^{9}	2^{8}	2^{7}	2^{6}	2^{5}	2^{4}	2^{3}	2^{2}	2^{1}	2^{0}	
≥32512	0 %	0	1	1	1	1	1	1	1	x	x	x	x	x	x	x	x	Overflow
32511	117,589	0	1	1	1	1	1	1	0	1	1	1	1	1	1	1	1	Overshoot range
27649	≥100,004	0	1	1	0	1	1	0	0	0	0	0	0	0	0	0	1	
27648	100,000	0	1	1	0	1	1	0	0	0	0	0	0	0	0	0	0	Rated range
1	0,003617	0	0	0	0	0	0	0	0	0	0	0	0	0	0	0	1	
0	0,000	0	0	0	0	0	0	0	0	0	0	0	0	0	0	0	0	
-1	0,000	1	1	1	1	1	1	1	1	1	1	1	1	1	1	1	1	limited to the low limit of the rated range, 0 V or 0 mA
-32512		1	0	0	0	0	0	0	1	0	0	0	0	0	0	0	0	
≤-32513	0 %	1	0	0	0	0	0	0	0	x	x	x	x	x	x	x	x	Underflow

Representation of analog values in the voltage output ranges

Table 5- 37 Representation of analog values in the ±10 V output range

System			Voltage output range	
	dec	hex	±10 V	
118,5149 %	32767	7FFF	0.00 V	Overflow, off power
	32512	7F00		
117,589 %	32511	7EFF	11.76 V	Overshoot range
	27649	6C01		
100 %	27648	6C00	10 V	Rated range
75 %	20736	5100	7.5 V	
0,003617 %	1	1	361.7 µV	
0 %	0	0	0 V	
	-1	FFFF	-361.7 µV	
-75 %	-20736	AF00	-7.5 V	
-100 %	-27648	9400	-10 V	
	-27649	93FF		Undershoot range
-117,593 %	-32512	8100	-11.76 V	
	-32513	80FF		Underflow, at zero voltage and current
-118,519 %	-32768	8000	0.00 V	

Table 5- 38 Representation of analog values in the 0 V to 10 V and 1 V to 5 V output ranges

System			Voltage output range		
	dec	hex	0 V to 10 V	1 V to 5 V	
118,5149 %	32767	7FFF	0.00 V	0.00 V	Overflow, off power
	32512	7F00			
117,589 %	32511	7EFF	11.76 V	5.70 V	Overshoot range
	27649	6C01			
100 %	27648	6C00	10 V	5 V	Rated range
75 %	20736	5100	7.5 V	3.75 V	
0,003617 %	1	1	361.7 µV	1 V +144.7 µV	
0 %	0	0	0 V	1 V	
	-1	FFFF			Undershoot range
-25 %	-6912	E500		0 V	
	-6913	E4FF			Not supported. Output value limited to 0 V.
-117,593 %	-32512	8100			
	-32513	80FF			Underflow, at zero voltage and current
-118,519 %	-32768	8000	0.00 V	0.00 V	

Representation of analog values in the current output ranges

Table 5- 39 Representation of analog values in the ±20 mA output range

System			Current output range	
	dec	hex	±20 mA	
118,5149 %	32767	7FFF	0.00 mA	Overflow, off power
	32512	7F00		
117,589 %	32511	7EFF	23.52 mA	Overshoot range
	27649	6C01		
100 %	27648	6C00	20 mA	
75 %	20736	5100	15 mA	Rated range
0,003617 %	1	1	723.4 nA	
0 %	0	0	0 mA	
	-1	FFFF	-723.4 nA	
-75 %	-20736	AF00	-15 mA	
-100 %	-27648	9400	-20 mA	
	-27649	93FF		Undershoot range
-117,593 %	-32512	8100	-23.52 mA	
	-32513	80FF		Underflow, at zero voltage and current
-118,519 %	-32768	8000	0.00 mA	

Table 5- 40 Representation of analog values in the 0 mA to 20 mA and 4 mA to 20 mA output ranges

System			Current output range		
	dec	hex	0 mA to 20 mA	4 mA to 20 mA	
118,5149 %	32767	7FFF	0.00 mA	0.00 mA	Overflow, off power
	32512	7F00			
117,589 %	32511	7EFF	23.52 mA	22.81 mA	Overshoot range
	27649	6C01			
100 %	27648	6C00	20 mA	20 mA	Rated range
75 %	20736	5100	15 mA	16 mA	
0,003617 %	1	1	723.4 nA	4 mA + 578.7 nA	
0 %	0	0	0 mA	4 mA	
	-1	FFFF			Undershoot range
-25 %	-6912	E500		0 mA	
	-6913	E4FF			Not supported. Output value limited to 0 mA.
-117,593 %	-32512	8100			
	-32513	80FF			Underflow, at zero voltage and current
-118,519 %	-32768	8000	0.00 mA	0.00 mA	

5.3 Setting the measuring method and ranges of analog input channels

Two procedures

There are two methods of setting the measuring method and ranges of analog input channels at analog modules:

- using a measuring range module and *STEP 7*
- hardwiring of the analog input channel and STEP 7

The method to use for the various analog modules is module-specific and is described in detail in the special module chapters.

This section describes how to set up the type and range of measurement using measuring range modules.

Setting the measurement type and ranges using measuring range modules

The analog modules are supplied with corresponding measuring range modules as required.

You may have to change the position of the measuring range module to suit the measurement type and range.

Note

Note that the measuring range modules are installed on the side of the analog input module.

Always check whether the measuring range modules needs to be set up for a different measurement type and range **before** you install the analog input module.

Optional settings of the measuring range modules

Optional settings of the measuring range modules: "A", "B", "C" and "D".

For detailed information on settings to be made for a specific measurement type and range, refer to the special module chapter.

The settings for the different measurement types and ranges are also printed onto the analog module.

Changing the positioning of measuring range modules

To insert the measuring range module into a different slot:

1. Remove the measuring range module from the slot of the analog input module by lifting it out with a screwdriver.

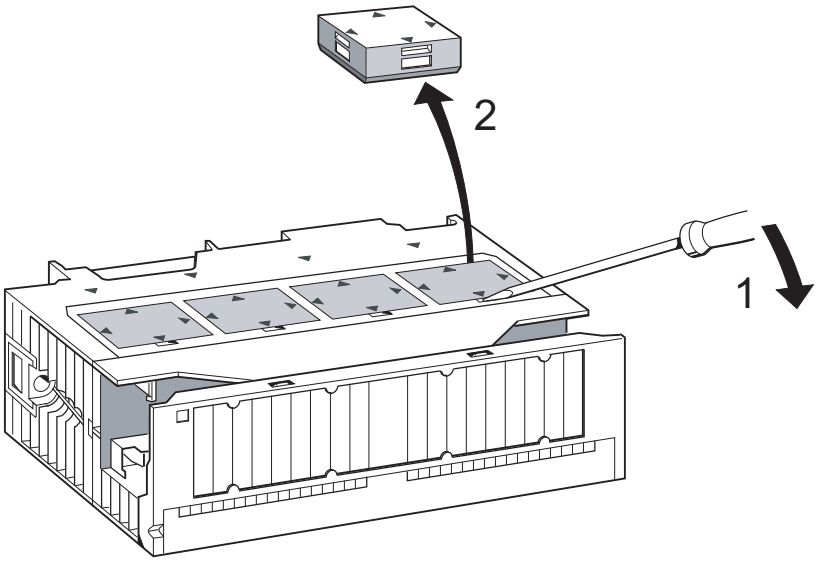

Figure 5-1 Removing the measuring range module from a slot of the analog input module

2. Insert the measuring range module into the required slot (1) of the analog input module.

   The indicator of the selected measuring range must be in line with the marker on the module (2).

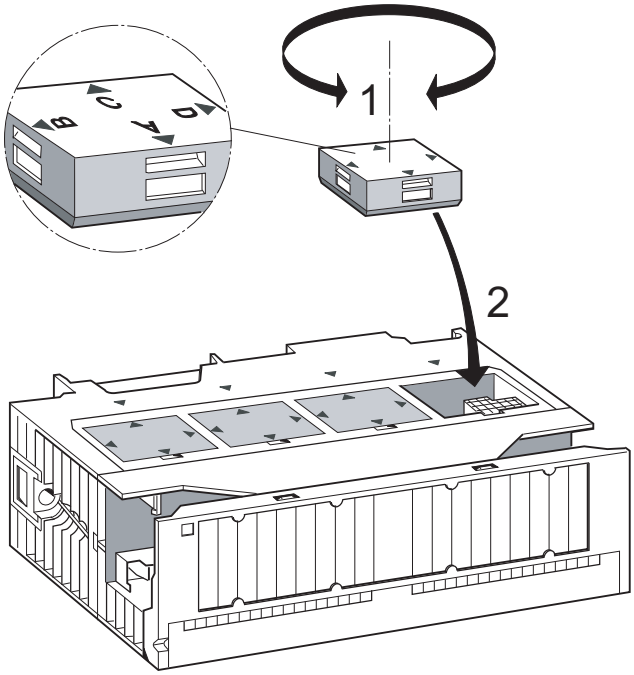

Figure 5-2 Inserting the measuring range module into the analog input module

Proceed likewise with any other measuring range modules.

You can now install the module.

CAUTION

Incorrect settings of the measuring range modules may lead to the destruction of the module.

Always make sure that the measuring range module is in the correct position before you connect a sensor to the module.

5.4 Response of the analog modules

This chapter

This chapter describes:

- the dependency of analog input and output values on CPU operating states and on the supply voltage of the analog module
- the reaction of analog modules, based on the actual analog value within the relevant range of values
- the influence of the operational limits of analog modules on analog IO values, as illustrated by an example

5.4.1 Influence of the power supply and operating state

Introduction

This chapter describes:

- the dependency of analog IO values on CPU operating states, and on the supply voltage of the analog module
- the reaction of analog modules, based on the actual analog value within the relevant range of values
- the influence of the operational limits of analog modules on analog IO values, as illustrated by an example

Influence of the supply voltage and operating state on the modules

The IO values of analog modules are determined by the CPU operating state and the module's supply voltage.

Table 5- 41 Dependencies of the analog IO values on the CPU's operating State and on the L+ supply voltage

CPU operating state		Supply voltage L+ at the analog module	Input value of the analog input module	Output value of the analog output module
POWER ON	RUN	L+ present	Measured value	CPU values
			$7FFF_H$, until the first conversion after POWER ON is completed, or when the module has been programmed.	Until the first conversion... • after POWER ON, the module outputs a 0 mA or 0 V signal. • after programming is successfully completed, it outputs the previous value.
		L+ missing	Overflow value	0 mA / 0 V
POWER ON	STOP	L+ present	Measured value	Substitution value / last value (default: 0 mA / 0 V)
			$7FFF_H$, until the first conversion after POWER ON is completed, or when the module has been programmed.	
		L+ missing	Overflow value	0 mA / 0 V
POWER OFF	-	L+ present	-	0 mA / 0 V
		L+ missing	-	0 mA / 0 V

Reaction to power failure

Power failure at analog modules is always indicated by their relevant SF LED. This information is also available on the module (in diagnostics buffer data.)

Diagnostics interrupt triggering is based on parameter settings.

See also

Programming analog modules (Page 307)

5.4.2 Influence of the range of analog values

influence of errors on analog modules with diagnostics functions

Errors may lead to an entry in the diagnostics buffer and trigger a diagnostics interrupt at analog modules with diagnostics function and corresponding parameter settings.

Influence of the range of values on the analog input module

The reaction of analog modules is determined by the actual input values within the range of values.

Table 5- 42 Reaction of analog input modules as a function of the actual analog value within the range of values

Measured value within	Input value	SF LED	Diagnostics	Interrupt
Rated range	Measured value	-	-	-
Overshoot/undershoot range	Measured value	-	-	-
Overflow	$7FFF_H$	lit[1]	Entry is made[1]	Diagnostics interrupt[1)]
Underflow	8000_H	lit[1]	Entry is made[1]	Diagnostics interrupt[1)]
beyond programmed limit	Measured value	-	-	Process interrupt[1)]
[1)], only supported by modules with diagnostics function, and depending on parameter settings				

Influence of the range of values on the analog output module

The reaction of analog modules is determined by the actual output values within the value range.

Table 5- 43 Reaction of analog output modules as a function of the actual analog value within the range of values

Output value within	Output value	SF LED	Diagnostics	Interrupt
Rated range	CPU value	-	-	-
Overshoot/undershoot range	CPU value	-	-	-
Overflow	0 signal	-	-	-
Underflow	0 signal	-	-	-

5.4.3 Influence of operational limits and basic error limits

Operational limit

The operational limit represents the total measuring/output error of an analog module within the permissible temperature range, based on the module's rating.

Basic error limit

The basic error limit represents the total measuring/output error at 25 °C, based on the module's rating.

Note

The percentile values of operational and basic error limits in the module's technical data always refer to the **highest possible** input and output value within the nominal range of the module.

Example of the determination of the output error of a module

An analog output module SM 332; AO 4 x 12 Bit is being used for voltage output. An output range of "0 to 10 V" is set. The module is operating at an ambient temperature of 30 °C, i.e. the operational limit applies. The technical data of the module state:

- Operational limit for voltage output: ±0,5 %

Hence, an output error of ±0.05 V (±0.5 % of 10 V) across the nominal range of the module must be expected.

At an actual voltage of 1 V, for example, the module will then output a value in the range from 0.95 V to 1.05 V. The relative error is ±5 % in this case.

For the example, the figure below shows how the relative error decreases as the output value approaches the end of the 10-V range.

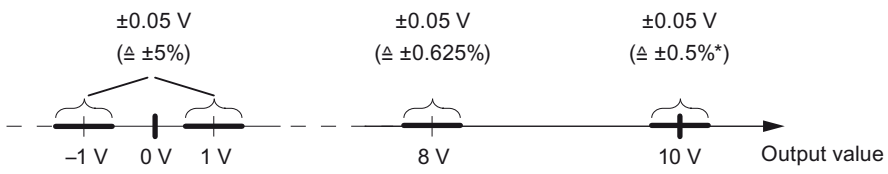

Figure 5-3 Example of the relative error of an analog output module

5.5 Conversion and cycle times of analog modules

Conversion time of analog input channels

The conversion time is the total of the basic conversion time plus additional processing times of the module for:

- Resistance measurement
- Wirebreak monitoring

The basic conversion time depends directly on the conversion method of the analog input channel (integrating method, actual value conversion.)

The integration time of integrating conversions has a direct influence on conversion times. The integration time depends on the interference frequency suppression you set in *STEP 7*.

For information on basic conversion times and additional processing times of the various analog modules, refer to the technical data of the relevant module.

Cycle time of analog input channels

Analog-to-digital conversion, and the transfer of digitized measured values to memory and/or to the backplane bus, are carried out sequentially, i.e. the analog input channels are converted in successive order. The cycle time, i.e. the time expiring until an analog input value is converted again, represents the accumulated conversion time of all activated analog input channels of the analog input module.

The figure below provides an overview of the cycle time elements for an n-channel analog module.

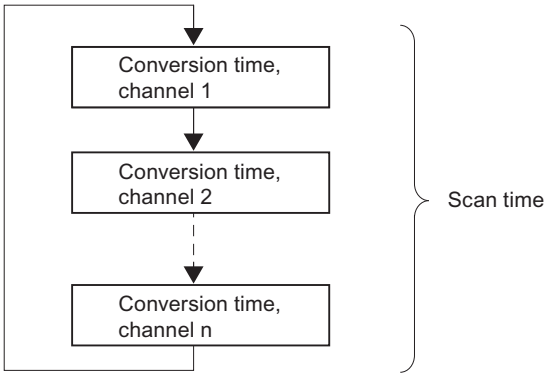

Figure 5-4 Cycle time of an analog input or output module

Conversion and cycle times for analog input channels in channel groups

Make allowances for the accumulated channel conversion time when the analog input channels are joined to form channel groups.

Example

Two analog input channels of the SM 331; AI 2 x 12 Bit analog input module form a channel group. You must therefore grade the cycle time in steps of 2.

Setting smoothing of analog values

Certain analog input modules allow you to set smoothing of analog values in *STEP 7*.

Using smoothing

Smoothed analog values provide a reliable analog signal for further processing.

It is useful to smooth the analog values with slow variations of measured values, for example, when measuring temperature.

Smoothing principle

The measured values are smoothed by digital filtering. Smoothing is accomplished by the module calculating mean values, derived from a defined number of converted (digitized) analog values.

The user configures up to four grades of smoothing (none, low, average, high). The grade determines the number of analog signals used for averaging.

A higher smoothing provides a more reliable analog value, and prolongs the time it takes to apply a smoothed analog signal following a step response (see the example below.)

Examples

The figures below show the number of cycles a module requires to apply a close to 100% smoothed analog value after a step response, based on the smoothing function settings. The figure applies to all signal changes at the analog input.

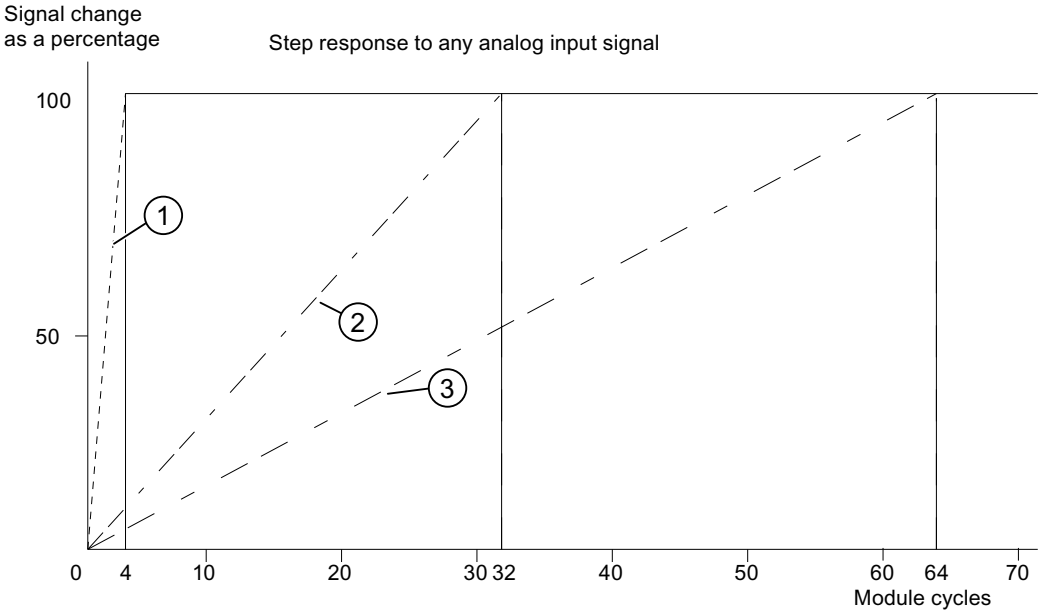

① Low smoothing grade
② Medium smoothing grade
③ High smoothing grade

Figure 5-5 Example of impact of smoothing on the jump response with the AI 8 x 14 bit

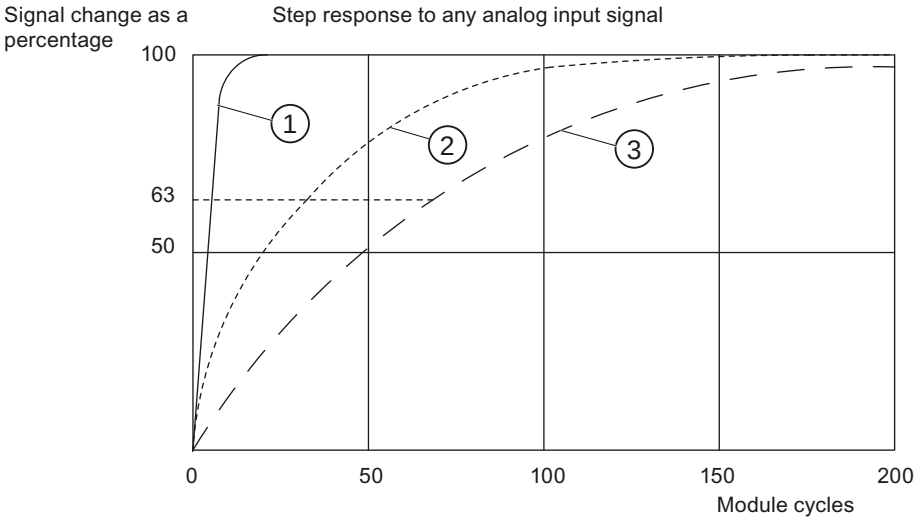

① Low smoothing grade
② Medium smoothing grade
③ High smoothing grade

Figure 5-6 Example of impact of smoothing on the step response with the AI 6 x TC

Further information on smoothing

For information showing whether a specific module supports smoothing functions, and special features to observe, refer to the chapter dealing with the analog input module.

Conversion time of the analog output channels

The conversion time of the analog output channels includes the transfer of digitized output values from internal memory, and their digital-to-analog conversion.

Cycle time of analog output channels

Analog output channels are converted sequentially, i.e. successively.

The cycle time, i.e. the time expiring until an analog output value is converted again, is equivalent to the accumulated conversion times of all activated analog output channels. Refer to the figure *Cycle time of an analog IO channel*.

Tip

You should disable all unused analog channels in **STEP 7** in order to reduce cycle times.

5.6 Settling and response times of analog output channels

Settling time

The settling time (t_2 to t_3), i.e. the time expiring until a converted value has gained a specified level at an analog output, is load-dependent. We therefore distinguish between resistive, capacitive and inductive load.

For information on settling times as a function of load at the various analog output modules, refer to the technical data of the relevant module.

Response time

The worst case response time (t_1 to t_3), i.e. the time expiring between the input of digital output values to internal memory, and the signal settling time at the analog output, may be equivalent to the total of cycle time plus settling time.

The worst case scenario is given, when the analog channel has been converted immediately before a new output value is transferred, and is not converted again until all other channels have been converted (cycle time.)

Overview of the settling time and response time of analog output modules

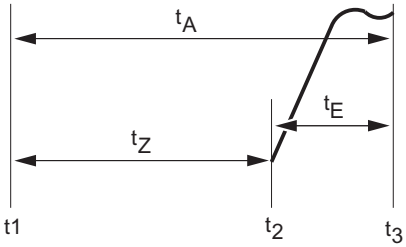

t_A	Response time
t_C	tC = Cycle time, equivalent to n x conversion time (n = active channels)
t_S	Settling time
t_1	new digital output value is set
t_2	Output value is applied and converted
t_3	specified output value is reached

5.7 Programming analog modules

Introduction

The properties of analog modules may differ. The module properties can be programmed.

Programming tools

You program analog modules in *STEP 7*. Always program the module while the CPU is in STOP mode.

After you defined all parameters, download these from your PG to the CPU. The CPU transfers the parameters to the relevant analog modules at the STOP → RUN transition.

Also, position the measuring range modules of the module as required.

Static and dynamic parameters

Parameters are organized by static and dynamic properties.

Set the static parameters while the CPU is in STOP, as described earlier.

You can also modify dynamic parameters in the active user program using SFCs. However, the parameters set in *STEP 7* will be applied again after a RUN → STOP, STOP → RUN transition of the CPU.

Parameters	configurable using	CPU operating state
static	PG (STEP 7 HW CONFIG)	STOP
dynamic	PG (STEP 7 HW CONFIG)	STOP
	SFC 55 in the user program	RUN

See also

Programmable parameters (Page 366)

5.7.1 Parameters of analog input modules

Parameters of analog input modules

For information on parameters supported by specific analog modules, refer to the chapter dealing with the relevant module.

The defaults apply if you have not set any parameters in STEP 7.

5.8 Diagnostics of analog modules

Programmable and non-programmable diagnostic messages

We distinguish between programmable and non-programmable diagnostic messages.

You only obtain programmable diagnostic messages if you have enabled diagnostics at the relevant parameters. Program these functions in the "Diagnostics" parameter block in *STEP 7*.

The the analog module always provides non-programmable diagnostic messages, irrespective of the enable state of diagnostic functions.

Reactions to a diagnostic message in *STEP 7*

Actions initiated by diagnostic messages:

- The diagnostic message is written to the diagnostics buffer of the analog module, and is then passed to the CPU.
- The error LED on the analog module is lit.
- When "Enable Diagnostics Interrupt" is set in STEP 7, the system triggers a diagnostic interrupt and calls OB82.

Reading diagnostic messages

You can read detailed diagnostic messages in the user program using SFCs.

Viewing the cause of error

You can view the cause of the error in the module diagnostics data in *STEP 7* (refer to the *STEP 7* Online Help.)

Diagnostic message included in the measured value of analog input modules

All analog input modules return the measured value $7FFF_H$ as a reaction to errors, irrespective of parameter settings. This measured value indicates either overflow, error, or a disabled channel.

Diagnostic message using the SF LED

Diagnostics-capable analog modules indicate errors by means of their SF LED (group error LED). The SF LED lights up when the analog module has generated a diagnostic message. It goes dark after all error states are cleared.

See also

Programming analog modules (Page 307)

5.8.1 Diagnostics messages of analog input modules

Overview of the diagnostics messages of analog input modules

The table below provides an overview of the diagnostics messages of analog input modules.

Table 5- 44 Diagnostics messages of analog input modules

Diagnostics message	LED	Scope of diagnostics	programmable
External load voltage missing	SF	Module	no
Configuration / programming error	SF	Channel	yes
Common-mode error	SF	Channel	yes
Wirebreak	SF	Channel	yes
Underflow	SF	Channel	yes
Overflow	SF	Channel	yes

5.8.2 Diagnostic messages of analog output modules

Overview of the diagnostic messages of analog output modules

The table below provides an overview of the diagnostic messages of analog output modules.

Table 5- 45 Diagnostic messages of analog output modules

Diagnostic message	LED	Scope of diagnostics	programmable
External load voltage missing	SF	Module	no
Configuration / programming error	SF	Channel	yes
Short-circuit to M*	SF	Channel	yes
Wire-break*	SF	Channel	yes

* Not with the SM 332, AO 4 x 16 bit, isochrone

Note

The detection of errors which are indicated in programmable diagnostic messages requires appropriate configuration of the analog module in *STEP 7*.

5.8.3 Causes of error and troubleshooting at analog input modules

Overview of the causes of error and troubleshooting at analog input modules

Table 5- 46 Diagnostics messages of analog input modules, causes of error and troubleshooting

Diagnostics message	Possible cause of error	To correct or avoid errors
External load voltage missing	Load voltage L+ of module missing	Connect supply L+
Configuration / programming error	Faulty parameters transferred to module	Check the measuring range module
		Program the module
Common-mode error	Potential difference C_{MV} between inputs M- and the reference potential of measuring circuit (M_{ANA} out of limits)	Connect M- with M_{ANA}
Wirebreak	Resistance of transducer circuit too high	Use a different type of sensor, or modify the wiring, for example, using a larger conductor cross-section.
	Open circuit between module and sensor	Connect the cable
	Channel not connected (open)	Disable the channel group ("measuring method" parameter)
		Wire the channel
Underflow	Input value below undershoot range; possible cause of error: wrong measuring range setting	program a different measuring range
	polarity reversal of the sensor wiring in the measuring ranges 4 to 20 mA and 1 to 5 V	Check the connections
Overflow	Input value exceeds overshoot range	program a different measuring range

5.8.4 Causes of error and troubleshooting at analog output modules

Overview of the causes of error and troubleshooting routines at analog output modules

Table 5- 47 Diagnostics messages of analog output modules, causes of error and troubleshooting

Diagnostics message	Possible cause of error	To correct or avoid errors
External load voltage missing	Load voltage L+ of module missing	Connect supply L+
Configuration / programming error	Faulty parameters transferred to module	Assign new module parameters
Short-circuit to M	Overload at output	Eliminate overload
	Short-circuit at output Q_V to M_{ANA}	Eliminate the short-circuit
Wirebreak	Actuator impedance too high	Use a different type of actuator, or modify the wiring using cables with a larger conductor cross-section
	Wire-break between the module and actuator	Connect the cable
	Channel not used (open)	Disable the channel group ("output type" parameter)

5.9 Interrupts of analog modules

Introduction

This section describes the interrupt response of analog modules. Always distinguish between the following interrupts:

- Diagnostic interrupt
- Hardware interrupt

Note that certain analog modules do not support interrupts, or are only partially capable of "handling" the interrupts described below. For information on modules which support interrupt functionality, refer to their technical data.

Description of the *STEP 7* blocks

For detailed information on the OBs and SFCs mentioned below, refer to the *STEP 7* Online Help.

Enabling interrupts

There are no default interrupt settings, that is, interrupts are disabled if not set accordingly. Program the interrupt enable parameter in *STEP 7*.

Diagnostic interrupt

Incoming error events (initial occurrence) and outgoing error events (error is cleared) are reported by means of diagnostic interrupt, if this interrupt is enabled.

The CPU interrupts user program execution in order to process diagnostic interrupt OB82.

You can call SFC51 or 59 in OB82 in the user program to view details of diagnostics data output by the module.

Diagnostics data remain consistent until the program exits OB82. The program acknowledges the diagnostic interrupt at the module when it exits OB82.

Hardware interrupt with "high or low limit exceeded" trigger

Define a working range by setting a high and low limit. If the process signal (for example, the temperature) overshoots this working range, the module triggers a hardware interrupt, provided the interrupt is enabled.

The CPU interrupts user program execution in order to execute hardware interrupt OB40.

In the user program of OB 40, you can define the reaction of the automation system to the violation of limits.

The program acknowledges the diagnostic interrupt at the module when it exits OB40.

Note

Note: the system does not generate a hardware interrupt if your limit setting exceeds the overshoot or undershoot range.

Structure of the start information variable OB40_POINT_ADDR of OB 40

The channel at which a specific limit is exceeded is logged to the OB40_POINT_ADDR variable in the start information of OB40. The diagram below shows the bit assignment of DWORD 8 in local data.

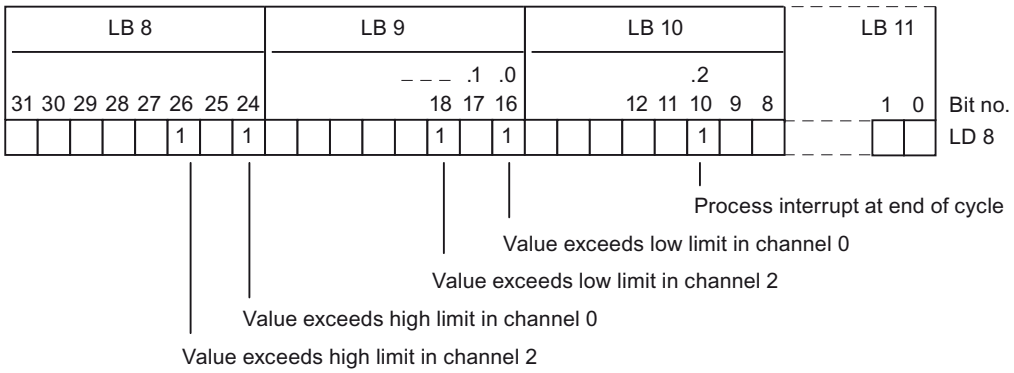

Figure 5-7 Start information of OB40: which limits event has triggered a hardware interrupt

Hardware interrupt triggered by "End of cycle reached"

You can synchronize a process with the cycle of the analog input module by programming a hardware interrupt trigger at the end of the cycle.

One cycle comprises the conversion of the measured values of all active channels of the analog input module. The module processes the channels in successive order. After all measured values were successfully converted, the module outputs an interrupt to the CPU in order to report new measured values at its channels.

You can always use this interrupt to download the actual converted analog values.

Analog modules

6

Introduction

This chapter describes:

1. Analog module selection and commissioning sequence
2. Overview of essential module properties
3. Modules which are available (properties, connection and block diagrams, technical data and additional information on the module):

   a) for analog input modules

   b) for analog output modules

   c) for analog IO modules

STEP 7 blocks for analog functions

You can use FC105 "SCALE" (scale values) and FC106 "UNSCALE" (unscale values) blocks to read and output analog values in *STEP 7*. Those FCs are available in the *STEP 7* standard library, in the "TI-S7-Converting Blocks" subfolder.

Description of *STEP 7* blocks for analog functions

For information on FCs 105 and 106, refer to the *STEP 7* Online Help.

Further information

You should be familiar with the structure of the parameter sets (data records 0, 1 and 128) in system data before you edit module parameters in the *STEP 7* user program.

You should be familiar with the structure of diagnostics data (data records 0, 1) in system data before you edit any diagnostics data of the module in the *STEP 7* user program.

See also

Principles of programming signal modules in the user program (Page 549)

Evaluating diagnostic data of signal modules in the user program (Page 609)

6.1 Analog module selection and commissioning sequence

Introduction

The table below contains the steps required to successfully complete commissioning of analog modules.

You do not strictly have to adhere to this suggested sequence, that is, you can complete other tasks such as installing or commissioning other modules, or program the module at an earlier or later time.

Analog module selection and commissioning sequence

1. Selecting the module
2. For certain analog input modules: Set the measuring type and range using the measuring range module
3. Installing the module in the SIMATIC S7 system
4. Assigning module parameters
5. Connect the measuring transducers or loads to the module
6. Commission the configuration
7. Analyze the configuration if commissioning failed

More information on installation and commissioning

See the "Installation" and "Commissioning" chapter in the Installation Manual for your automation system:

- S7-300 Automation System, Installation or
- S7-400 Automation System, Installation or
- Distributed I/O Device ET 200M

The documentation is available on the Internet (http://support.automation.siemens.com/WW/view/en).

6.2 Module overview

Introduction

The tables below summarize the essential properties of the analog modules. This overview supports you in selecting a module to suit your requirements.

6.2.1 Analog input modules

Overview of properties

The table below shows essential properties of the analog input modules

Table 6- 1 Analog input modules

Properties	Module				
	SM 331; AI 8 x 16 Bit	SM 331; AI 8 x 16 Bit	SM 331; AI 8 x 14 Bit High Speed	SM 331; AI 8 x 13 Bit	SM 331; AI 8 x 12 Bit
	(-7NF00-)	(-7NF10-)	(-7HF0x-)	(-1KF02-)	(-7KF02-)
Number of inputs	8 inputs in 4 channel groups	8 inputs in 4 channel groups	8 inputs in 4 channel groups	8 inputs in 8 channel groups	8 inputs in 4 channel groups
Resolution	programmable for each channel group: • 15 bits+sign	programmable for each channel group: • 15 bits+sign	programmable for each channel group: • 13 bits+sign	programmable for each channel group: • 12 bits+sign	programmable for each channel group: • 9 bits+sign • 12 bits+sign • 14 bits+sign
Measurement type	programmable for each channel group: • Voltage • Current	programmable for each channel group: • Voltage • Current	programmable for each channel group: • Voltage • Current	programmable per channel: • Voltage • Current • Resistance • Temperature	programmable for each channel group: • Voltage • Current • Resistance • Temperature
Measuring range selection	any, per channel group	any, per channel group	any, per channel group	any, per channel	any, per channel group
Supports isochronous mode	no	no	yes	no	yes
Programmable diagnostics	yes	yes	yes	no	no
Diagnostic interrupt	programmable	programmable	programmable	no	programmable

	Module				
Limit value monitoring	programmable for 2 channels	programmable for 8 channels	programmable for 2 channels	no	programmable for 2 channels
Hardware interrupt when limit exceeded	programmable	programmable	programmable	no	Programmable
Hardware interrupt at end of cycle	no	yes	no	No	no
Potential ratios	electrically isolated from: • The backplane bus interface	electrically isolated from: • The backplane bus interface	electrically isolated from: • The backplane bus interface • The load voltage (not for 2-DMU)	electrically isolated from: • The backplane bus interface	electrically isolated from: • the CPU • The load voltage (not for 2-DMU)
maximum potential difference between inputs (ICM)	50 VDC	60 VDC	11 VDC	2.0 VDC	≤ DC 2.3 V
Special features	-	-	-	Motor protection with PTC and silicone temperature sensors	-
Z sign 2-DMU = 2-wire transducer					

Table 6- 2 Analog input modules (continued)

Properties	Module				
	SM 331; AI 2 x 12 Bit	SM 331; AI 6 x TC	SM 331; AI 8 x TC	SM 331; AI 8 x RTD	SM 331; AI 8 x 0/4...20 mA HART
	(-7KB02-)	(-7PE10-)	(-7PF11-)	(-7PF01-)	(-7TF00-)*
Number of inputs	2 inputs in 1 channel group	6 inputs in 1 channel group	8 inputs in 4 channel groups	8 inputs in 4 channel groups	8 inputs in 1 channel group
Resolution	programmable for each channel group: • 9 bits+sign • 12 bits+sign • 14 bits+sign	Programmable for each channel group: • 15 bits+sign	Programmable for each channel group: • 15 bits+sign	Programmable for each channel group: • 15 bits+sign	programmable for each channel group: 15 bits+sign

	Module				
Measurement type	programmable for each channel group: • Voltage • Current • Resistance • Temperature	Programmable for each channel group: • Voltage • Temperature	programmable for each channel group: • Temperature	programmable for each channel group: • Resistance • Temperature	Programmable for each channel group: • Voltage • Current • Resistance • Temperature
Measuring range selection	any, per channel group	any, per channel group	any, per channel group	any, per channel group	any, per channel group
Supports isochronous mode	Yes	No	Yes	Yes	Yes
Programmable diagnostics	No	Yes	No	No	no
Diagnostic interrupt	programmable	Programmable	Programmable	Programmable	Programmable
Limit value monitoring	programmable for 1 channel	Programmable for 6 channels	programmable for 8 channels	programmable for 8 channels	programmable for 8 channels
Hardware interrupt when limit exceeded	Programmable	Programmable	Programmable	Programmable	programmable
Hardware interrupt at end of cycle	no	No	Programmable	Programmable	No
Potential ratios	electrically isolated from: • the CPU • The load voltage (not for 2-DMU)	electrically isolated from: • the CPU	electrically isolated from: • of the CPU	electrically isolated from: • the CPU	electrically isolated from: • the CPU • The load voltage (not for 2-DMU)
maximum potential difference between inputs (ICM)	≤ DC 2.3 V	250 VAC	60 VAC/75 VDC	60 VAC/75 VDC	60 VAC/75 VDC
Special features	-	Calibration	-	-	-
Z sign 2-DMU = 2-wire transducer					

* This module is described in the Distributed I/O Device ET 200M HART Analog Modules manual. You can find the manual on the Internet (http://support.automation.siemens.com/WW/view/en/22063748).

6.2.2 Analog output modules

Overview of properties

The table below shows the analog output modules based on their essential properties

Table 6- 3 Analog output modules: Overview of properties

Properties	Modules				
	SM 332; AO 8 x 12 Bit	SM 332; AO 4 x 16 Bit	SM 332; AO 4 x 12 Bit	SM 332; AO 2 x 12 Bit	SM 332; AO 8 x 0/4...20mA HART
	(-5HF00-)	(-7ND02-)	(-5HD01-)	(-5HB01-)	(-8TF00-) *
Number of outputs	8 output channels	4 outputs in 4 channel groups	4 output channels	2 output channels	8 output channels
Resolution	12 bits	16 bits	12 bits	12 bits	15 bits (0 mA to 20mA) 15 bits +sign (4 mA to 20mA)
Output type	per channel: • Voltage • Current	per channel: • Voltage • Current	per channel: • Voltage • Current	per channel: • Voltage • Current	per channel: • Voltage • Current
Supports isochronous mode	no	yes	no	no	no
Programmable diagnostics	yes	yes	yes	yes	yes
Diagnostic interrupt	programmable	programmable	programmable	programmable	programmable
Substitute value output	no	programmable	programmable	programmable	programmable
Potential ratios	electrical isolation between: • the backplane bus connection • load voltage	electrical isolation between: • backplane bus interface and channel • channels • output and L+, M • CPU and L+, M	electrically isolated from: • the backplane bus interface • load voltage	electrically isolated from: • the backplane bus interface • load voltage	electrically isolated from: • the backplane bus interface • load voltage
Special features	-	-	-	-	-
+sign = plus sign					

* This module is described in the Distributed I/O Device ET 200M HART Analog Modules manual. You can find the manual on the Internet (http://support.automation.siemens.com/WW/view/en/22063748).

6.2.3 Analog I/O modules

Overview of properties

The table below shows the analog IO modules based on their essential properties

Table 6- 4 Analog IO modules: Overview of properties

Properties	Modules	
	SM 334; AI 4/AO 2 x 8/8 Bit (-0CE01-)	SM 334; AI 4/AO 2 x 12 Bit (-0KE00-)
Number of inputs	4 inputs in 1 channel group	4 inputs in 2 channel groups
Number of outputs	2 outputs in 1 channel group	2 outputs in 1 channel group
Resolution	8 bits	12 bits + sign
Measurement type	programmable for each channel group: • Voltage • Current	programmable for each channel group: • Voltage • Resistance • Temperature
Output type	per channel: • Voltage • Current	per channel: • Voltage
Supports isochronous mode	no	no
Programmable diagnostics	no	no
Diagnostic interrupt	no	no
Limit value monitoring	no	no
Hardware interrupt when limit is exceeded	no	no
Hardware interrupt at end of cycle	no	no
Substitute value output	no	no
Potential ratios	• connected to potential of the backplane bus interface • electrically isolated to load voltage	electrically isolated to: • backplane bus interface • load voltage
Special features	Not programmable, measurement and output type defined by hardwiring	-

6.3 Analog input module SM 331; AI 8 x 16 bit; (6ES7331-7NF00-0AB0)

Order number

6ES7331-7NF00-0AB0

Properties

- 8 inputs in 4 channel groups
- Programmable measurement type at each channel group
  - Voltage
  - Current
- Programmable resolution per channel group (15 bits + sign)
- Any measuring range per channel group
- Programmable diagnostics and diagnostic interrupt
- Programmable limit value monitoring for 2 channels
- Programmable hardware interrupt when limit is exceeded
- High-speed update of measured values
- Electrically isolated to the CPU
- Supports parameter reassignment in RUN

Resolution

The resolution of measured values is independent of the selected integration time.

Diagnostics

For information on diagnostic messages at the "group diagnostics" parameter, refer to the table *Diagnostic messages of analog input modules*.

Hardware interrupts

Hardware interrupts for channel groups 0 and 1 can be programmed in *STEP 7*. However, set a hardware interrupt only for the first channel of a channel group, that is, either at channel 0, or at channel 2

High-speed update of measured values

A high-speed update of measured values at two channels of a channel group is three times compared to the activation of several channel groups.

Example: When channels 0 and 1 are active with 2.5 ms filtering, both channels return new measured values to the PLC at intervals of 10 ms. (with other settings, the refresh rate is equivalent to the filter setting.)

High-speed update of measured values is only possible if both channels of channel group 0 and 1 are active, that is, the "measuring type" parameter is set. However, only one of the two channel groups 0 or 1 may be active (not concurrently active.)

Terminal assignment

The diagrams below show various wiring options

Wiring: Voltage and current measurement

Wire the voltage inputs of the channel voltage in parallel using the corresponding shunt resistor when measuring current. Bridge the channel input terminals with the adjacent connector terminals.

Example: You configure channel 0 for current measurement by bridging terminals 22 and 2, and terminals 23 to 3.

At the channel configured for current measurements, connect the shunt resistor to the adjacent channel terminals in order to achieve the specified precision.

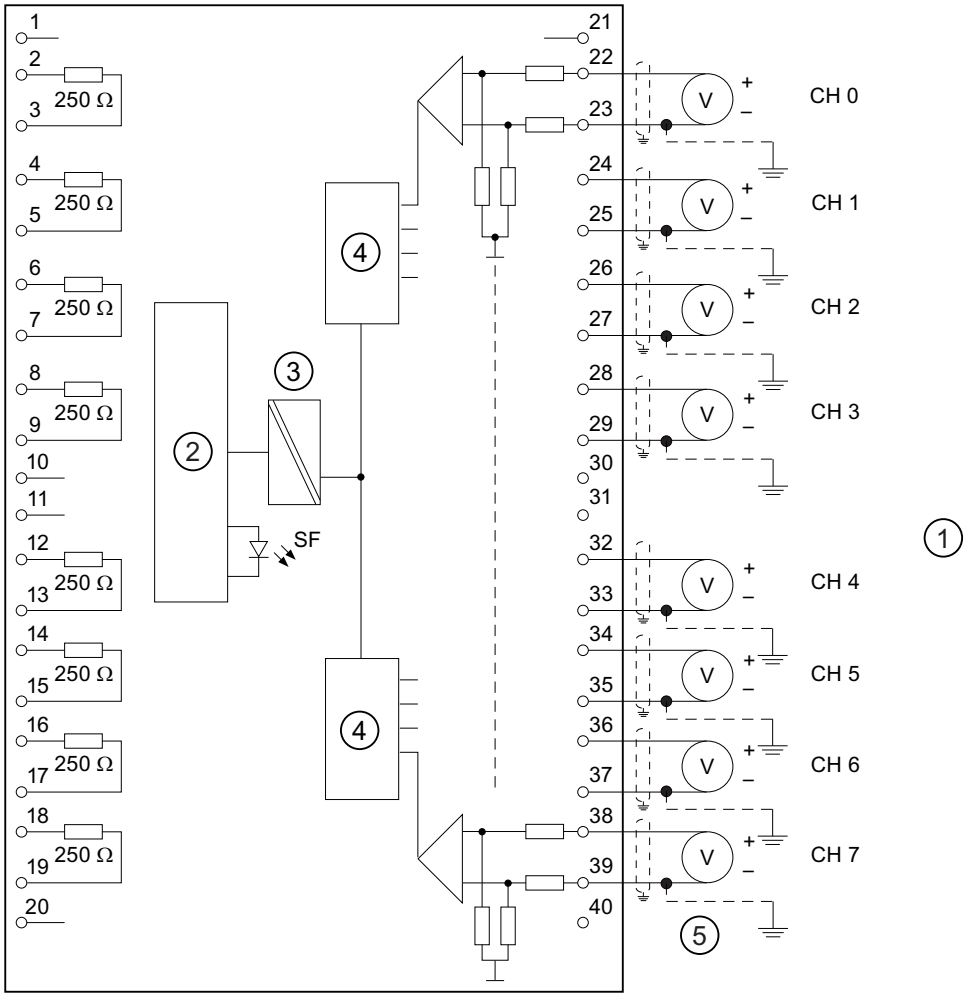

① Voltage measurement
② Backplane bus interface
③ Electrical isolation
④ Analog-to-Digital Converter (ADC)
⑤ Equipotential bonding

Figure 6-1 Wiring and block diagrams

Wiring: 2-wire and 4-wire transducers

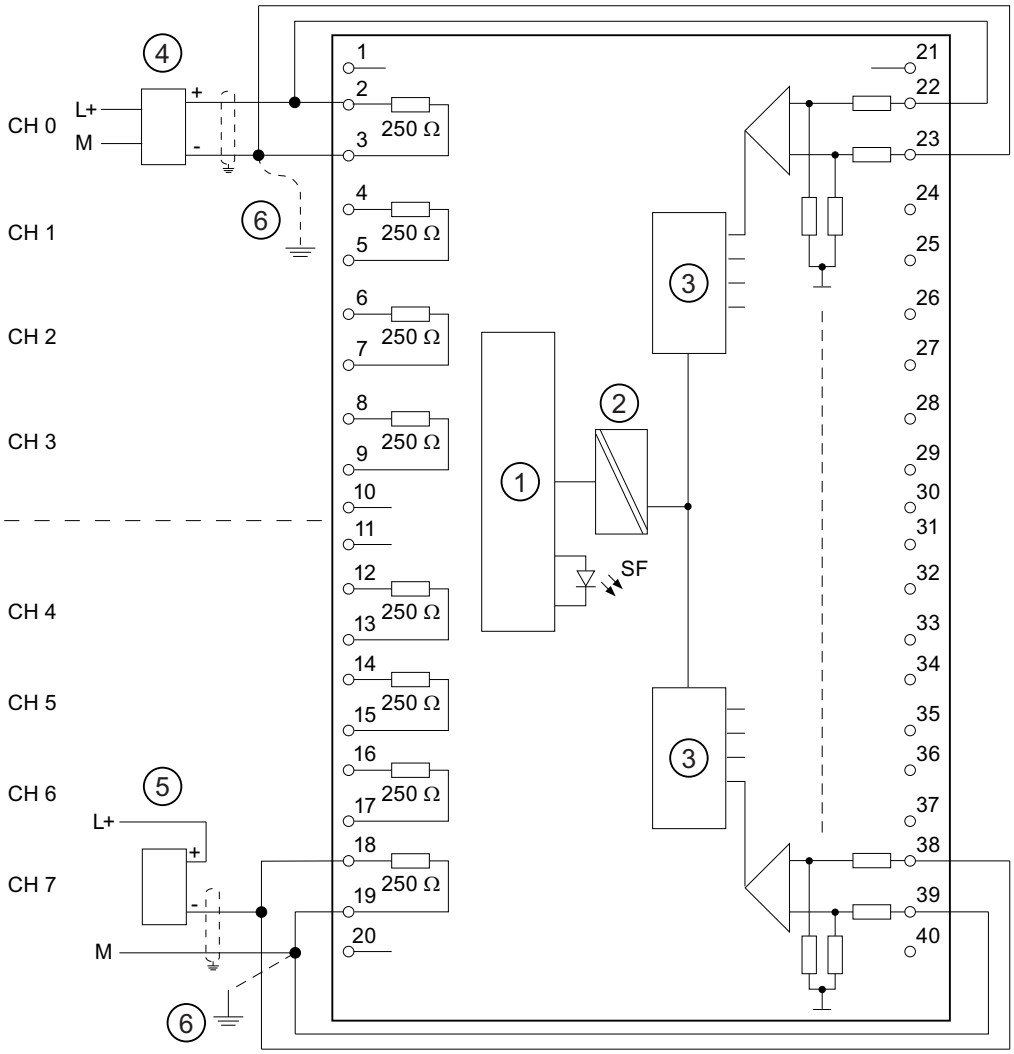

① Backplane bus interface
② Electrical isolation
③ Analog-to-Digital Converter (ADC)
④ Channel 0 for 4-wire transducer
⑤ Channel 7 for 2-wire transducer (with external supply)
⑥ Equipotential bonding

Figure 6-2 Wiring and block diagrams

Technical specifications

Technical specifications				
Dimensions and weight				
Dimensions W x H x D (mm)	40 x 125 x 117			
Weight	ca. 272 g			
Module-specific data				
Supports parameter reassignment in RUN	Yes			
Response of non-configured inputs	Return the process value which was valid before configuration			
Supports isochronous mode	no			
Number of inputs	8			
Cable length • shielded	max. 200 m			
Voltages, currents, electrical potentials				
Electrical isolation • between channels and the backplane bus	yes			
Maximum potential difference • between inputs (CMV) • Between the inputs and $M_{internal}$ (V_{iso})	35 VAC / 50 VDC, 60 VAC / 75 VDC			
Isolation test voltage	500 VDC			
Current consumption • from the backplane bus	max. 130 mA			
Power loss of the module	typ. 0.6 W			
Generation of analog values				
Measuring principle	Integrating			
Integration/conversion time/resolution (per channel)				
• programmable	yes			
• Integration time in ms	10	16,7	20	100
• Basic conversion time per channel group with more than one active channel	35	55	65	305
• Channel conversion time per channel group, only with active channel group 0 or 1	10	16,7	20	100
Channel integration time (1/f1) in ms	10	16,7	20	100
• Resolution (including overshoot range)	15 bits + sign			
• Interference frequency suppression at interference frequency f1 in Hz	100	60	50	10
Basic execution time of the module in ms (all channels enabled)	140	220	260	1220

Technical specifications		
Interference frequency suppression and error limits		
Interference frequency suppression at f = n (f1 1%), (f1 = interference frequency); n= 1, 2, ...		
• Common mode interference (CMV < 50 V) • Series mode interference (peak value of interference < rated input range)	> 100 dB > 90 dB	
Crosstalk between inputs	> 100 dB	
Operational limit (across entire temperature range, relative to measurement range end value in the selected input range)	C_{MV} = 0 / CMV = ±50 V	
• Voltage input • Current input	±0,1% / ± 0,7% ±0,3% / ± 0,9%	
Basic error limit (operational limit at 25 °C, relative to measurement range end value in the selected input range)		
• Voltage input • Current input	±0,05% ±0,05%	
Temperature error (relative to input range)	± 0.005%/K	
Linearity error (relative to input range)	±0,03%	
Repeat accuracy (in transient state at 25 °C, relative to input range)	±0,025%	
Status, interrupts, diagnostics		
Interrupts • Limit interrupt • Diagnostic interrupt	 programmable Channels 0 and 2 programmable	
Diagnostic functions • Group error display • Reading diagnostic information	programmable red LED (SF) supported	
Sensor selection data		
Input ranges (rated values) / input impedance		
• Voltage	± 5 V 1 V to 5 V ± 10 V	/ 2 MΩ / 2 MΩ / 2 MΩ
• Current	0 mA to 20 mA ± 20 mA 4 mA to 20 mA	/ 250 Ω / 250 Ω / 250 Ω
Maximum voltage at voltage input (destruction limit)	max. 50 V, continuous	
Maximum current at current input (destruction limit)	max. 32 mA	
Wiring of the signal transducers	using a 40pin front connector	
• for voltage measurement • for current measurement – as 2-wire transducer – as 4-wire transducer	supported possible, with separate transducer supply supported	

Parameter reassignment in RUN

If you reassign parameters in RUN, the following special characteristic applies.

SF LED is lit:

If a diagnostics was pending prior to reconfiguration, the SF LEDs (on CPU, IM or module) may be lit even though diagnostics are no longer pending and the module is operating correctly.

Solution:

- Only assign new parameters if no diagnostics is pending, or
- unplug module and plug it in again.

6.3.1 Measurement types and ranges

Introduction

The measurement type and range is configured at the "measuring range" parameter in *STEP 7*.

The default setting of the module is "voltage" measurement with "± 10V" range. You can use these default settings without having to program the SM 331; AI 8 x 16 Bit in *STEP 7*.

Measurement types and ranges

Table 6- 5 Measurement types and ranges

Selected type of measurement	Measuring range
Voltage V:	± 5 V 1 V to 5 V ± 10 V
Current	0 mA to 20 mA ± 20 mA 4 mA to 20 mA

6.3.2 Programmable parameters

Introduction

For information on programming analog modules, refer to the chapter Programming analog modules (Page 307).

Parameters

Table 6- 6 Overview of the parameters of SM 331; AI 8 x 16 Bit

Parameters	Range of values	Default	Parameter type	Scope
Enable • Diagnostic interrupt • Hardware interrupt when limit exceeded	 yes/no yes/no	 no no	dynamic	Module
Hardware interrupt trigger • High limit • Low limit	May be restricted by the measuring range. from 32511 to - 32512 from - 32512 to 32511	-	dynamic	Channel
Diagnostics • Group diagnostics • with line continuity check	 yes/no yes/no	 no no	static	Channel group
Measurement • Measurement type	 disabled Voltage V: 4DMU current (4-wire transducer)	 V	dynamic	Channel group
• Measuring range	See the table *Measurement types and ranges*	± 10 V		
• Noise suppression	100 Hz; 60 Hz; 50 Hz; 10 Hz	50 Hz		

Channel groups

The channels of SM 331; AI 8 x 16 Bit are arranged in four groups of two channels. You can assign parameters only to one channel group.

The table below shows the relevant configuration of channel groups. The channel group number is required to program SFC parameters in the user program.

Table 6- 7 Assignment of SM 331; AI 8 x 16 Bit channels to channel groups

Channels ...	... form one channel group each
Channel 0	Channel group 0
Channel 1	
Channel 2	Channel group 1
Channel 3	
Channel 4	Channel group 2
Channel 5	
Channel 6	Channel group 3
Channel 7	

See also

Diagnostics messages of analog input modules (Page 309)

6.3.3 Additional information on SM 331; AI 8 x 16 Bit

Unused channels

Set the "disabled" value at the "measuring type" parameter for unused channels. This setting reduces module cycle times.

As certain programmed inputs may remain unused due to the channel group configuration, make allowances for the special features of those inputs outlined below in order to be able to use the diagnostic functions at these used channels:

- **Measuring range 1 V to 5 V:** wire the used input and unused input of the same channel group in parallel.
- **Current measurement, 4 mA to 20 mA:** wire the used input and unused input of the same channel group in series. Connect a shunt resistor to each programmed and unused channel.
- **Other measuring ranges:**Short-circuit the plus and minus inputs of the channel.

Line continuity check

The line continuity check is available for the 1 V to 5 V and 4 mA to 20 mA ranges.

Rule for both measuring ranges:

When the line continuity check is **enabled**, the module logs the wire-break to diagnostics data when the current drops below 3.6 mA (0.9 V.)

The module also triggers a diagnostic interrupt if this function is enabled in the program.

A wire break can only be signaled by means of the lit SF LED and the diagnostic bytes must be evaluated in the user program if diagnostic interrupts are disabled.

When line continuity check is **disabled** and diagnostic interrupts are enabled, the module triggers a diagnostic interrupt when underflow is detected.

Special features in programming high and low limits

The programmable limits (hardware interrupt triggers) of SM 331; AI 8 x 16 Bit differ from the range of value shown in the *Overview of parameters of SM 331; AI 8 x 16 Bit.* table.

Reason: The calculation methods deployed in the module software to evaluate the process variables do not allow the reporting of values up to 32511 in certain situations. The process value triggering a hardware interrupt at underflow or overflow limits is based on the calibration factors of the relevant channel, and may vary between the low limits shown in the table below and the value 32511 ($7EFF_H$).

You may not define any limits which exceed the minimum limits specified in the table below.

Table 6- 8 Minimum high and low limits of SM 331; AI 8 x 16 Bit

Measuring range	Minimum high limit	Minimum low limit
± 10 V	11.368 V 31430 $7AC6_H$	-11.369 V -31433 8537_H
± 5 V	5.684 V 31430 $7AC6_H$	-5.684 V -31430 $853A_H$
1 V to 5 V	5.684 V 32376 $7E78_H$	0.296 V -4864 $ED00_H$
0 mA to 20 mA	22.737 mA 31432 $7AC8_H$	-3.519 mA -4864 $ED00_H$
4 mA to 20 mA	22.737 mA 32378 $7E7A_H$	1.185 mA -4864 $ED00_H$
± 20 mA	22.737 mA 31432 $7AC8_H$	-22.737 mA -31432 8538_H

Measuring errors as a result of CMV

SM 331; AI 8 x 16 Bit is capable of taking measurements, irrespective of the presence of any CMV in the AC or DC range.

With AC CMV values of a multiple of filter frequency settings, noise is suppressed as a result of ADC integration time and common mode suppression at the input amplifiers. With AC CMV < 35 V_{RMS}, the noise suppression of > 100 dB results in negligible measurement errors.

The influence of DC CMV can only be reduced to minimum using the noise suppression function of the input amplifier unit. A certain degradation of measuring accuracy in proportion to CMV must be expected. The worst case error is generated at 50 VDC between one channel and the remaining seven channels. The calculated worst case error is 0.7% at 0 °C to 60 °C, while the measured error usually lies at ≤ 0.1% at 25 °C.

6.4 Analog input module SM 331; AI 8 x 16 Bit; (6ES7331-7NF10-0AB0)

Order number

6ES7331-7NF10-0AB0

Properties

- 8 inputs in 4 channel groups
- Programmable measurement type at each channel group
  - Voltage
  - Current
- Programmable resolution per channel group (15 bits + sign)
- Any measuring range selection per channel group
- Programmable diagnostics and diagnostic interrupt
- Programmable limit value monitoring for 8 channels
- Programmable hardware interrupt when limit is exceeded
- Programmable hardware interrupt at end of cycle
- High-speed update of measured values at up to 4 channels
- Electrical isolation to the CPU
- Supports parameter reassignment in RUN

Diagnostics

For information on diagnostic messages at the "group diagnostics" parameter, refer to the table *Diagnostic messages of analog input modules*.

Terminal assignment

The diagrams below show various wiring options

Wiring: Voltage and current measurement

Connection possible at both sides at channels 0 to 7

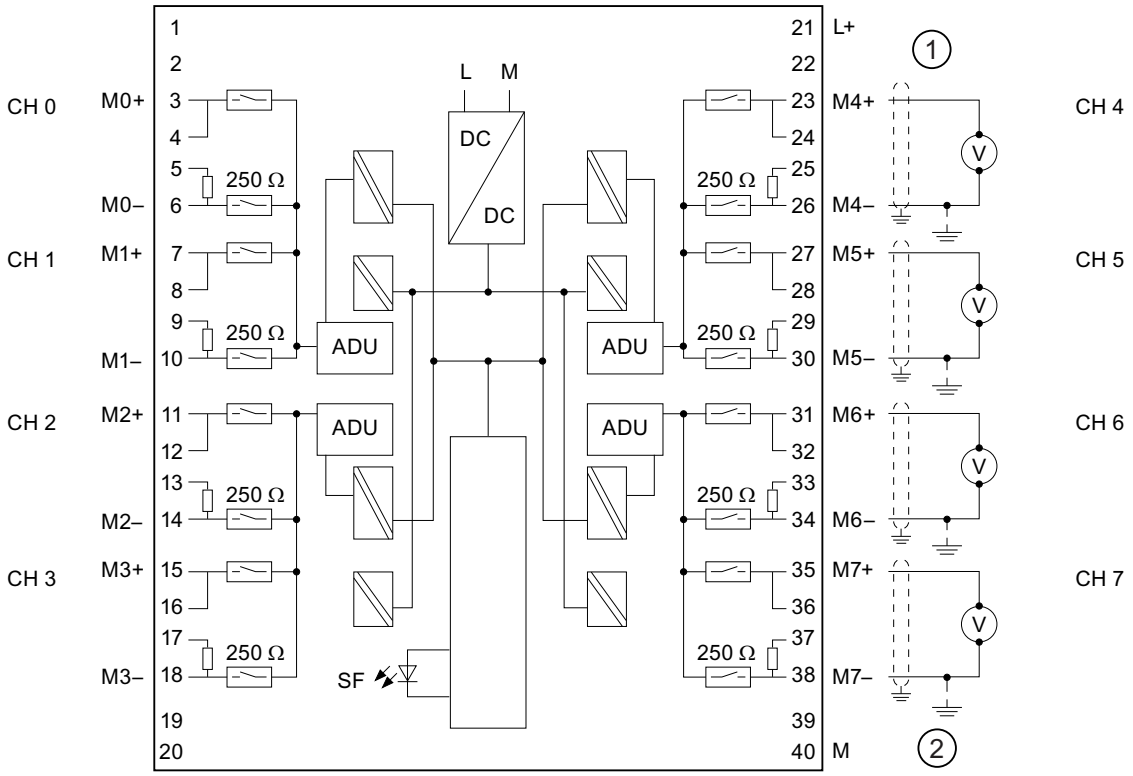

① Connection for voltage measurement

② Equipotential bonding

Figure 6-3 Wiring and block diagrams

Wiring: 2-wire and 4-wire transducer

Connection possible at both sides at channels 0 to 7

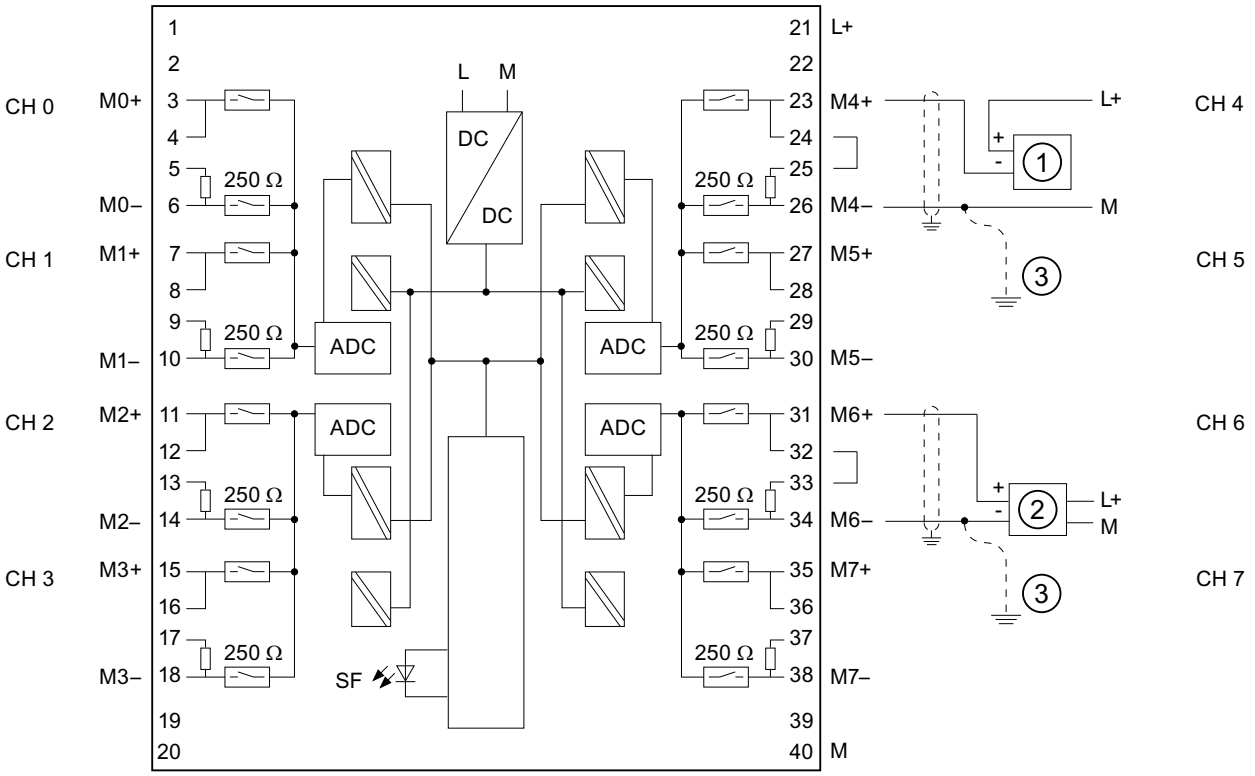

① 2-wire transducer

② 4-wire transducer

③ Equipotential bonding

Figure 6-4 Wiring and block diagrams

Technical specifications

Technical specifications	
Dimensions and weight	
Dimensions W x H x D (mm)	40 x 125 x 117
Weight	ca. 272 g
Module-specific data	
Supports parameter reassignment in RUN	Yes
Response of non-programmed inputs	Return the process value which was valid before configuration
Supports isochronous mode	no
Number of inputs	8
Cable length • shielded	 max. 200 m
Voltages, currents, electrical potentials	
Rated electronics supply voltage L +	24 VDC
• Reverse polarity protection	yes
Electrical isolation	
• between channels and the backplane bus • between channels and electronics power supply • between channels in groups of	yes yes yes 2
Maximum potential difference	
• between inputs (CMV)	60 VAC / 75 VDC
• Between the inputs and $M_{internal}$ (V_{iso})	60 VAC / 75 VDC
Isolation test voltage	500 VAC
Current consumption	
• from the backplane bus • from supply voltage L+	max. 100 mA max. 200 mA
Power loss of the module	typ. 3.0 W
Generation of analog values	
Measuring principle	Integrating
Integration/conversion time/resolution (per channel)	
• programmable • Basic conversion time in ms (8-channel mode) • Basic conversion time in ms (4-channel mode) • Resolution, including sign • Interference frequency suppression at frequency f1 in Hz	yes 95/83/72/23 10[1) 4)] 16 bits All[2)]/50/60/400
Measured value smoothing	None / low/ average/ high
Basic execution time of the module, in ms (8-channel-mode)	190/166/144//46
Basic execution time of the module, in ms (4-channel-mode)	10[1)]

Technical specifications	
Interference frequency suppression, error limits	
Interference frequency suppression at F = n x (f1 1%)(f1 = interference frequency, n = 1, 2, ...)	
• Common mode interference (VCM < AC 60 V) • Series mode interference (peak value of disturbance < rated input range)	> 100 dB > 90 dB [3)]
Crosstalk between inputs	> 100 dB
Operational limit (across entire temperature range, relative to themeasurement range end value in the selected input range)	
• Input voltage • Input current	±0,1% ±0,1%
Basic error limit (operational limit at 25 °C, relative to themeasurement range end value in the selected input range)	
• Voltage input • Current input	±0,05% ±0,05%
Temperature error (relative to input range)	± 0.005%/K
Linearity error (relative to input range)	±0,01%
Repeat accuracy (in settled state at 25 °C, relative to measurement range end value in the input range)	±0,01%
Status, interrupts, diagnostics	
Interrupts	
• Hardware interrupt when limit value is exceeded • Hardware interrupt at end of cycle • Diagnostic interrupt	Programmable channels 0 to 7 programmable programmable
Diagnostic functions	programmable
• Group error display • Reading diagnostic information	red LED (SF) supported
Transducer selection data	
Input range (rated values) / input impedance	
• Voltage	± 5 V / 2 MΩ 1 V to 5 V / 2 MΩ ± 10 V / 2 MΩ
• Current	0 mA to 20 mA / 250 Ω 4 mA to 20 mA / 250 Ω ± 20 mA / 250 Ω
Maximum voltage at voltage input (destruction limit)	35 V continuous; 75 V for max. duration of 1 s (duty factor 1:20)
Maximum current at current input (destruction limit)	40 mA
Wiring of the signal transducers	using a 40pin front connector
• for voltage measurement • for current measurement as 2-wire transducer as 4-wire transducer	supported possible, with separate transducer supply supported

Technical specifications
1) Interference frequency for 4-channel mode is "All"
2) Interference frequencies 50/60/400 Hz are designated as "All"
3)Series-mode rejection for 8-channel mode is reduced as follows: 50 Hz > 70 db 60 Hz > 70 db 400 Hz > 80 dB 50/60/400 Hz > 90 dB
4) In 4-channel mode, the converted value settles to 100% within 80 ms. The value determined in this process is returned at intervals of max. 10 ms.

Reassigning parameters in RUN

If you reassign parameters in RUN, the following special characteristic applies.

SF LED is lit:

If a diagnostics was pending prior to reconfiguration, the SF LEDs (on CPU, IM or module) may be lit even though diagnostics is no longer pending and the module is operating correctly.

Solution:

- Only assign new parameters if no diagnostics is pending, or
- unplug module and plug it in again.

6.4.1 Measurement types and measuring ranges

Introduction

The measurement type and range is configured at the "measuring type" parameter in *STEP 7*.

Table 6- 9 Measurement types and ranges

Selected type of measurement	Output range
Voltage V:	± 5 V, from 1 V to 5 V, ± 10 V
Current (4-wire transducer) 4DMU	0 mA to 20 mA 4 mA to 20 mA ± 20 mA

Channel groups

The channels of SM 331; AI 8 x 16 bits are arranged in four groups of two channels. You always assign parameters to a group. The interrupt limits form the exception.

The table below shows the relevant configuration of channel groups. The channel group number is required to program SFC parameters in the user program.

Table 6- 10 Assignment of SM 331; AI 8 x 16 Bit channels to channel groups

Channels ...	...form one channel group each
Channel 0	Channel group 0
Channel 1	
Channel 2	Channel group 1
Channel 3	
Channel 4	Channel group 2
Channel 5	
Channel 6	Channel group 3
Channel 7	

6.4.2 Programmable parameters

Introduction

For information on programming analog modules, refer to the chapter Programming analog modules (Page 307).

Parameter

Table 6- 11 Overview of parameters of SM 331; AI 8 x 16 Bit

Parameters	Range of values	Defaults	Parameter type	Scope
Enable • Process interrupt when limit value is exceeded • Process interrupt at end of cycle • Diagnostics interrupt	 yes/no yes/no yes/no	 no no no	 dynamic dynamic dynamic	Module
Process interrupt trigger • High limit • Low limit	 32511 to -32512 -32512 to 32511	 - -	 dynamic dynamic	 Channel Channel
Diagnostics • Group diagnostics • Line continuity check	 yes/no yes/no	 no no	 static	 Channel Channel
Measurement • Module operating mode • Noise suppression	 • 8 channels • 4 channels 50 Hz 60 Hz 400 Hz 50/60/400 Hz	 yes no 50/60/400 Hz	 dynamic	 Module Channel group
• Smoothing	• none • weak • medium • strong	none	dynamic	Channel group
• Measurement type	• Measuring range:		dynamic	Channel group
disabled				
Voltage	• ± 5 V • 1 V to 5 V • ± 10 V	± 10 V		
Current (4-wire transducer)	• 0 mA to 20 mA • 4 mA to 20 mA • ± 20 mA	4 mA to 20 mA		

See also

Diagnostics messages of analog input modules (Page 309)
Programming analog modules (Page 307)

6.4.3 Additional information for SM 331; AI 8 x 16 Bit

Modes of operation

Operating modes of SM 331; AI 8 x 16 Bit:

- 8-channel mode
- 4-channel mode

8-channel operating mode

In this mode, the module changes between the two channels of each group. The four ADCs of the module simultaneously convert channels 0, 2, 4 and 6. The ADCs first convert the channels with even numbers, and then the channels with the odd numbers 1, 3, 5 and 7 (see the figure below.)

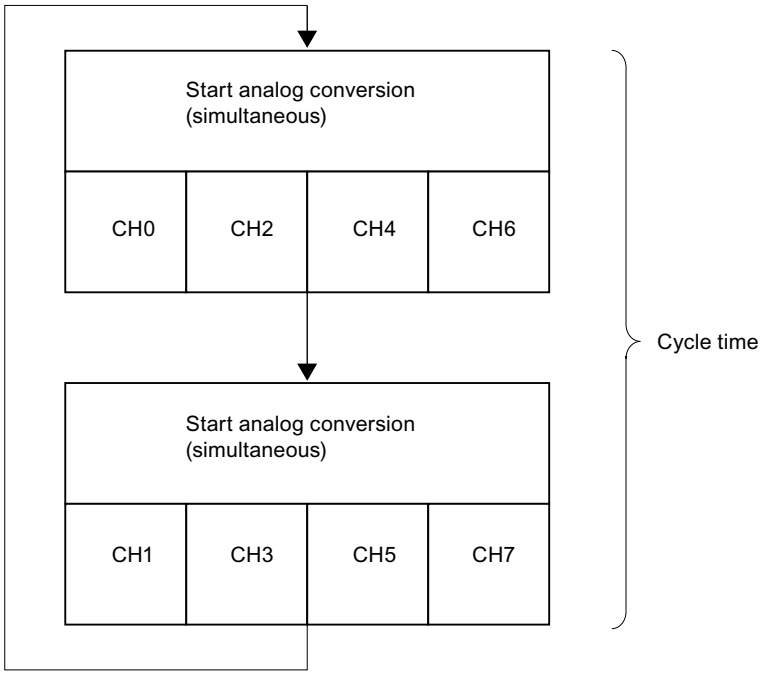

Figure 6-5 8-channel mode cycle time

Cycle time of module in 8-channel mode

The channel conversion time is based on the programmed noise suppression. The channel conversion time is 76 ms, including communication time, at a set interference frequency of 50 Hz. The channel conversion time is 65 ms when you set an interference frequency of 60 Hz. You can reduce channel conversion times to 16 ms by setting an interference frequency of 400 Hz. When you set 50, 60 and 400 Hz , the channel conversion time amounts to 88 ms. The module then has to switch to a different channel of the group by means of the Opto-MOS relay. Opto-MOS relays require 7 ms for switching and settling. The table below shows this correlation.

Table 6- 12 Cycle times in 8-channel mode

Interference frequency (Hz)	Channel cycle time (ms)	Module cycle time (all channels)
50	83	166
60	72	144
400	23	46
50/60/400	95	190

4-channel operating mode

In this mode, the module does not change between the channels of the groups. The four ADCs of the module simultaneously convert the channels 0, 2, 4 and 6.

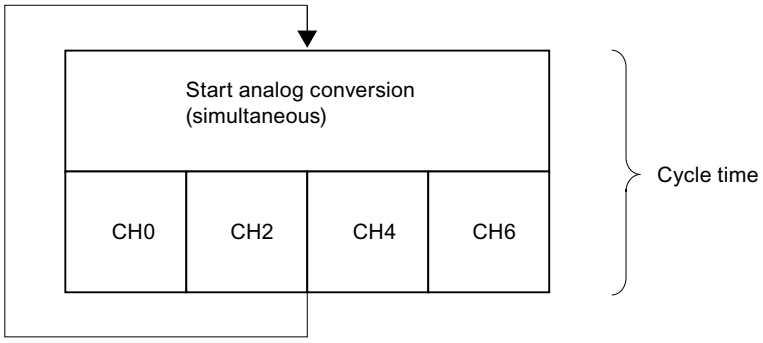

Figure 6-6 4-channel mode cycle time

Module cycle time

The converted value settles to 100% within 80 ms and is updated every 10 ms when 4-channel mode is set. The channel and module cycle times are always identical, because the module does not change between the channels of a group: 10 ms.

Channel conversion time = channel cycle time = module cycle time = 10 ms

Unused channels

Set the "disabled" value at the "measuring method" parameter for unused channels. This setting reduces module cycle times.

As certain programmed inputs may remain unused due to the channel group configuration in 8-channel mode, make allowances for the special features of these inputs outlined below to activate the diagnostics functions at the channels being used:

- **Measuring range 1 V to 5 V:** wire the used input and unused input of the same channel group in parallel.
- **Current measurement, 4 mA to 20 mA:** wire the used input and unused input of the same channel group in series. A shunt resistor must be connected for each programmed and unused channel.
- **Other measuring ranges:** Short-circuit the plus and minus inputs of the channel.

Line continuity check

The line continuity check is available for the voltage measuring ranges and for the 4 mA to 20 mA current measuring range.

If you configured a measuring range of ± 5V, 1 V to 5 V, ± 10 V, 4 mA to 20 mA, and **enabled** the line continuity check, the analog input module logs a wire-break event in diagnostics data when the underflow (32768) is reached.

The module also triggers a diagnostic interrupt if this function is enabled in the program.

A wire break can only be signaled by means of the lit SF LED and the diagnostic bytes must be evaluated in the user program if diagnostic interrupts are disabled.

Under the following circumstances, wire-break detection can take up to 2 s:

- If a wire break occurs during voltage measurement.
- If a wire break occurs on the front-connector jumpers from shunt (250 Ω) to the inputs during current measurement.

In this period, the measured value can run through the entire valid value range.

If you configured a measuring range of 4 mA to 20 mA, **disabled** the line continuity check, and enabled diagnostic interrupts, the module triggers a diagnostic interrupt when the underflow value is reached.

Overflow, underflow and hardware interrupt limits

The limits in diagnostics response to overflow and underflow in certain measuring ranges differ compared to the listed ranges starting at the chapter*Analog value representation for analog input channels* of the manual. In certain situations the numerical methods of the module software used to evaluate the process variables do not return values up to 32511.

Do not set any hardware interrupt limits higher than the lowest possible overflow or underflow response limits. End of cycle interrupt starting at the chapter *Analog value representation for analog input channels*.

End of cycle interrupt

You can synchronize a process with the conversion cycle of the module by enabling the end of cycle interrupt. The interrupt is set when enabled channels have been converted.

The table below shows the contents of the 4 bytes of additional OB40 information during process or end of cycle interrupts.

Content of the 4 bytes of additional information		2^7	2^6	2^5	2^4	2^3	2^2	2^1	2^0	Byte
Special analog flags	2 bits per channel to identify the range									
	High limit exceeded at channel	7	6	5	4	3	2	1	0	0
	Low limit exceeded at channel	7	6	5	4	3	2	1	0	1
	End of cycle event						X			2
	Free bit									3

Operation of the module on the ET 200M Distributed IO devices

Operation of SM 331; AI 8 x 16 Bit on ET 200M requires one of the following IM 153 x:

- IM 153-1; as of 6ES7153-1AA03-0XB0, E 01
- IM 153-2; as of 6ES7153-2AA02-0XB0; E 05
- IM 153-2; as of 6ES7153-2AB01-0XB0; E 04

Programming restrictions when operating SM 331; AI 8 x 16 Bit on PROFIBUS masters which only support DPV0

Certain parameters are not supported when operating an electrically isolated SM 331; AI 8 16 Bit analog input module on an ET200M PROFIBUS slave system in combination with a PROFIBUS master which is not an S7 master. Non-S7 masters do not support hardware interrupts. All parameters associated with these functions are disabled for this reason. This includes hardware interrupt enable, hardware restrictions and end the enabling of cycle interrupts. All other parameters are allowed.

6.5 Analog input module SM 331; AI 8 x 14 Bit High Speed; isochrone; (6ES7331-7HF0x-0AB0)

Order number

6ES7331-7HF00-0AB0 or 6ES7331-7HF01-0AB0

Properties

- 8 inputs in 4 channel groups
- Measurement type adjustable per channel group:
  - Voltage
  - Current
- Programmable resolution at each channel group (13 bits + sign)
- Any measuring range per channel group
- Programmable diagnostics and diagnostic interrupt
- Programmable limit value monitoring for 2 channels
- Programmable hardware interrupt when limit is exceeded
- High-speed update of measured values
- Supports isochronous mode
- Electrical isolation from the CPU
- Electrically isolated from load voltage (not for 2-wire transducers)

Diagnostics

For information on diagnostics messages at the "group diagnostics" parameter, refer to chapter Diagnostic messages of analog input modules (Page 309).

Hardware interrupts

Hardware interrupts for channel groups 0 and 1 can be programmed in STEP 7. However, set a hardware interrupt only for the first channel of a channel group, that is, either at channel 0, or at channel 2

Terminal assignment

The diagrams below show the various wiring options.

Wiring: Voltage measurement

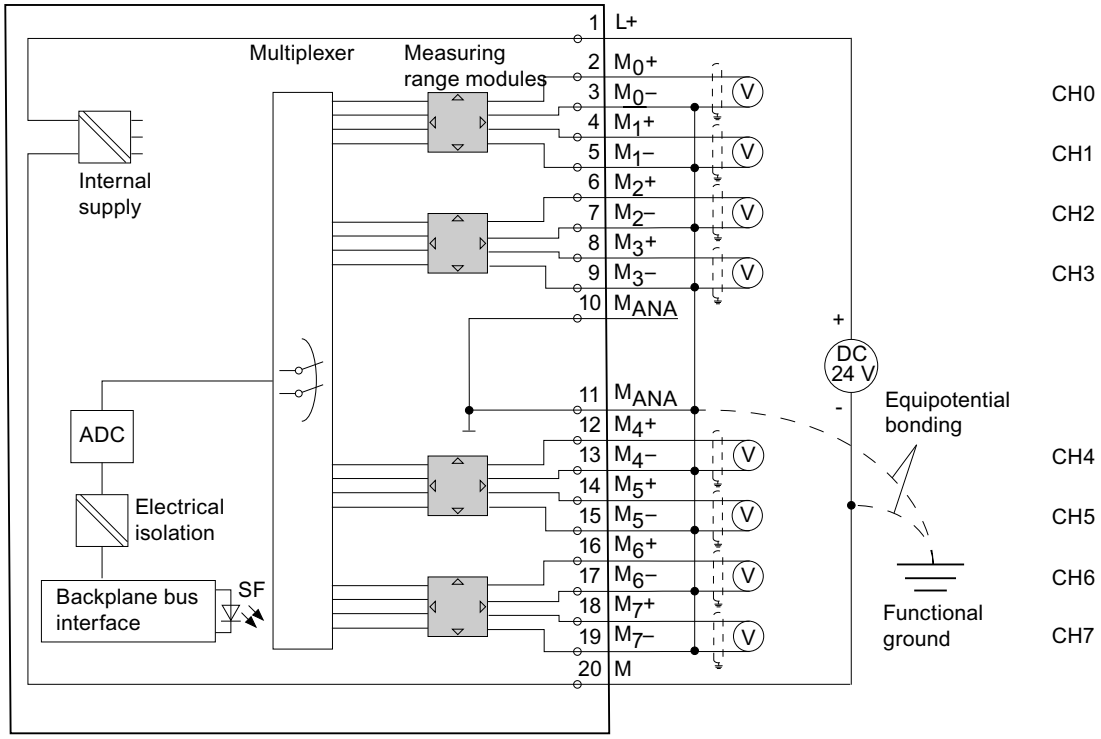

Figure 6-7 Block diagram and wiring diagram

Measuring range module settings

Measuring range	Measuring range module setting
± 1V	A
± 5V	B
± 10V	B (Default)
1 V to 5V	B

Wiring: 2-wire and 4-wire transducers for current measurement

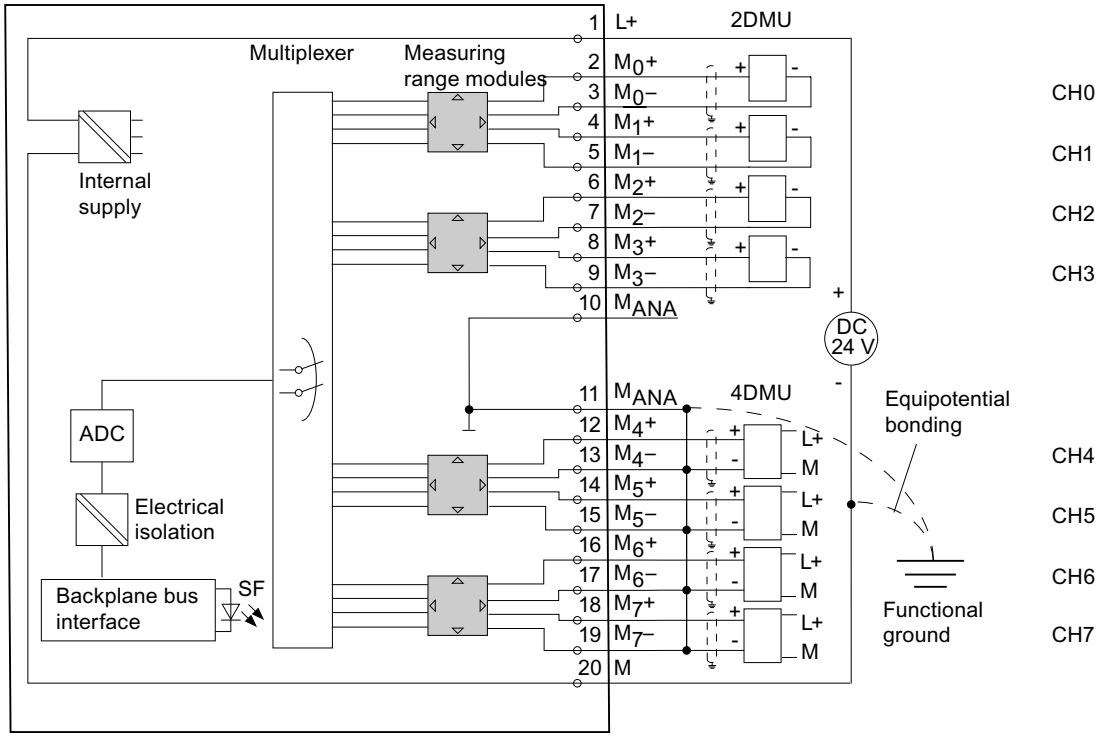

Figure 6-8 Block diagram and wiring diagram

Measuring range module settings

Measuring range		Measuring range module setting
2-wire transducer	4 mA to 20mA	D
4-wire transducer	± 20mA 0 mA to 20mA 4 mA to 20mA	C

Technical specifications

Technical specifications	
Dimensions and weight	
Dimensions W x H x D (mm)	40 x 125 x 117
Weight	ca. 230 g
Module-specific data	
Supports isochronous mode	yes
Number of inputs	8
Cable length • shielded	 max. 200 m
Voltages, currents, electrical potentials	
Rated electronics supply voltage L + • Reverse polarity protection	24 VDC yes
Transducer power supply	
• Supply current • short circuit-proof	max. 30 mA (per channel) yes
Electrical isolation	
• between channels and the backplane bus • between channels • between channels and electronics power supply	yes no yes
Maximum potential difference • between inputs and M_{ANA} (CMV) – at signal = 0 V – not for 2-wire transducers • between inputs (CMV) • between M_{ANA} and $M_{internal}$ (V_{iso})	 11 VDC / 8 VAC 11 VDC / 8 VAC 75 VDC / 60 VAC
Isolation test voltage • Channels to backplane bus and load voltage L +	 500 VDC
Current consumption • from the backplane bus • from load voltage L + (without 2-wire transducer)	 max. 100 mA max. 50 mA
Power loss of the module	typ. 1.5 W
Generation of analog values	
Measuring principle	Actual value conversion
Integration/conversion time/resolution (per channel)	
• programmable	yes
• Basic conversion time per channel	52 µs
• Resolution (including overshoot range)	14 bits

Technical specifications				
• Interference frequency suppression at interference frequency f1 in Hz	none	400	60	50
• Basic execution time of the module (independent of the number of enabled channels)	0.42 ms	2.5 ms	16.7 ms	20 ms
Interference frequency suppression, error limits				
Interference frequency suppression at f = n (f1 ± 1 %), (f1 = interference frequency) n=1.2...				
• Common mode interference (CMV < 11 Vpp) • Series-mode interference (peak value < rated input range)	> 80 dB > 40 dB			
Crosstalk between inputs	> 65 dB			
Operational limit (across entire temperature range, relative to measurement range end value in the selected input range)				
• Voltage input	± 1 V ± 5 V ± 10 V 1 V to 5 V		± 0,3 % ± 0,4 % ± 0,3 % ± 0,4 %	
• Current input	± 20 mA 0 mA to 20 mA 4 mA to 20 mA		± 0,3 % ± 0,3 % ± 0,3 %	
Basic error limit (operational limit at 25 °C, relative to the measurement range end value in the selected input range)				
• Voltage input	± 1 V ± 5 V ± 10 V 1 V to 5 V		± 0,2 % ± 0,25 % ± 0,2 % ± 0,25 %	
• Current input	± 20 mA 0 mA to 20 mA 4 mA to 20 mA		± 0,2 % ± 0,2 % ± 0,2 %	
Temperature error (relative to input range)	± 0.004 %/K			
Linearity error (relative to input range)	± 0,03 %			
Repeat accuracy (in settled state at 25 °C, relative to input range)	± 0,1 %			
Status, interrupts, diagnostics				
Interrupts • Hardware interrupt • Diagnostic interrupt	 programmable programmable			
Diagnostic functions • Group error display • Reading diagnostics information	 red LED (SF) supported			

Technical specifications		
Sensor selection data		
Input ranges (rated values) / input impedance		
• Voltage	± 1 V ± 5 V ± 10 V 1 V to 5 V	10 MΩ 100 kΩ 100 kΩ 100 kΩ
• Current	± 20 mA 0 mA to 20 mA 4 mA to 20 mA	50 Ω 50 Ω 50 Ω
Maximum voltage at voltage input (destruction limit)	max. 20 V continuous; 75 V for the duration of max. 1 s (duty factor 1:20)	
Maximum current at current input (destruction limit)	40 mA	
Wiring of the signal sensors • for voltage measurement • for current measurement as 2-wire transducer as 4-wire transducer • Load of the 2-wire transducer at L+ = DC 24 V	using a 20-pin front connector supported supported supported max. 820 Ω	
Characteristics linearization	none	

6.5.1 Measurement types and measuring ranges

Introduction

The analog input module has measuring range modules. The measurement type and range is configured at the "measuring range" parameter in *STEP 7*.

The default setting of the module *STEP 7* is "voltage" measurement with "± 10V" range. You can use those default settings without having to program the SM 331;
AI 8 x 14 Bit High Speed in *STEP 7*.

Measuring range modules

You may have to change the position of the measuring range module to suit the measurement type and range. See table *Setting measuring methods and ranges of analog input channels*. The settings are also printed on the module. Mark the position of the measuring range module on the front door (see figure).

Range:

A	B
C	D

Measurement types and measuring ranges

Table 6- 13 Measurement types and ranges

Selected type of measurement	Measuring range (type of sensor)	Measuring range module settings
V: Voltage	± 1 V	A
	± 5 V 1 V to 5 V ± 10 V	B
4DMU: Current (4-wire transducer)	0 mA to 20 mA 4 mA to 20 mA ± 20 mA	C
2DMU: Current (2-wire transducer)	4 mA to 20 mA	D

Channel groups

The channels of SM 331; AI 8 x 14 Bit High Speed are arranged in four groups of two channels. You can assign parameters only to one channel group.

SM 331; AI 8 x 14 bits High Speed is equipped with one measuring range module per channel group.

The table below shows the relevant configuration of channel groups. The channel group number is required to program SFC parameters in the user program.

Table 6- 14 Assignment of SM 331; AI 8 x 14 bits High Speed channels to channel groups

Channels ...	... form one channel group each
Channel 0	Channel group 0
Channel 1	
Channel 2	Channel group 1
Channel 3	
Channel 4	Channel group 2
Channel 5	
Channel 6	Channel group 3
Channel 7	

6.5.2 Programmable parameters

Introduction

For information on programming analog modules, refer to the chapter Programming analog modules (Page 307).

Parameter

Table 6- 15 Overview of parameters for SM 331; AI 8 x 14 Bit High Speed

Parameters	Range of values	Default	Parameter type	Scope
Enable • Diagnostics interrupt • Process interrupt when limit exceeded	 yes/no yes/no	 no no	dynamic	Module
Fast Mode (can only be set if the 331-7HF01 is included for isochronous operation in the DP slave properties)	yes/no	no	static	Module
Process interrupt trigger • High limit • Low limit	May be restricted by the measuring range. from 32511 to - 32512 from - 32512 to 32511	-	dynamic	Channel
Diagnostics • Group diagnostics	 yes/no	 no	static	Channel group
Measurement • Measurement type	 disabled Voltage V 4DMU current (4-wire transducer) 2DMU current (2-wire transducer)	 V	dynamic	Channel or channel group
• Measuring range	See the table *Measurement types and ranges*	± 10 V		
• Noise suppression	none; 400 Hz; 60 Hz; 50 Hz	50 Hz		

6.5.3 Isochronous mode

Properties

Reproducible reaction times (i.e. of the same length) are achieved in a SIMATIC system by means of a constant DP bus cycle, and synchronization of the single cyclic processes outlined below:

- Independent user program cycle. The length of the cycle time may vary due to non-cyclic program branching.
- Independent and variable DP cycle on the PROFIBUS subnet
- Cyclic operation of the backplane bus of the DP slave.
- Cyclic signal preparation and conversion at the electronic modules of the DP slave.

The constant DP cycle runs in synchronism and at the same length. The CPU run levels (OB61 to OB64) and isochronous IO are synchronized with this cycle. I/O data are therefore transferred at defined and constant intervals (isochronous mode.)

Requirements

- The DP master and slave must support isochronous mode. You require *STEP 7* V5.2 or higher.

Mode of operation: Isochronous mode

Table 6- 16 Conditions of isochronous mode:

Standard Mode	
Filtering and processing time T_{WE} between reading actual values and writing these to the transfer buffer(the value defined for TWE applies, irrespective of the enable status of diagnostics)	max. 625 µs
including an input delay time of	10 µs
T_{DPmin}	3.5 ms
Diagnostics interrupt	max. 4 x T_{DP}
Fast Mode (only possible with 6ES7331-7HF01-0AB0)	
Filter and processing time T_{WE} between reading actual value and writing the results to the transfer buffer (diagnosis not selectable)	max. 625 µs
including an input delay time of	10 µs
T_{DPmin}	1 ms

Note

You can accelerate the cycle of your DP system by setting "Fast Mode." However, this is at the expense of diagnostics: Diagnostics functions will be disabled in this operating mode.

The minimum T_i value of 875 µs which you can set in *HW Config* is derived from the defined T_{WE} value plus calculation and transfer times required by the IM 153.

The specified T_{DPmin} value is determined by the size of the DP slave/IM 153 configuration: Of the diverse installed modules, the slowest always determines the time T_{DPmin}.

Note

When operated in "isochronous" mode, the modules automatically sets "Integration time: none/interference frequency", irrespective of parameter settings in *STEP 7*. none / interference frequency". "Process interrupt" functionality is not available in "isochronous" mode.

Calculation of filter and processing times

The same time conditions always apply, regardless of the number of configured channels. The time relative to the clock signal for reading a specific channel is calculated according to the formula:

T_{WE}_CH = (channel number +1) x 52 µs + tv; tv = 119 to 209 µs

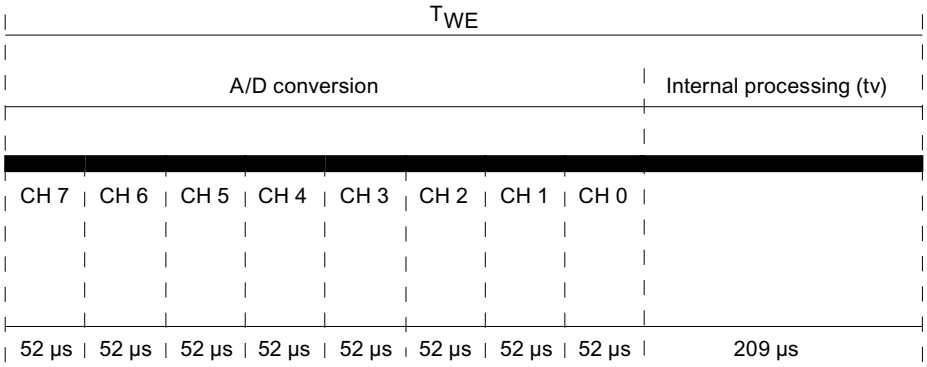

Figure 6-9 Calculation of filter and processing times

Definition of isochronous mode

The module starts with the analog-to-digital conversion of channel 7, and saves the result internally. Next, it converts channels 6...0 sequentially at intervals of 52 ms and in the same way. After an additional internal processing time, it outputs the result of all converted channels to the backplane bus interface where it can be fetched by the CPU.

Further information

For further information on isochronous mode, refer to the *STEP 7* Online Help, in the operating instructions ET 200M Distributed IO System (http://support.automation.siemens.com/WW/view/en/1142798) and in the Synchronicity (http://support.automation.siemens.com/WW/view/en/15218045) manuals.

6.5.4 Additional information on SM 331; AI 8 x 14 Bit High Speed, isochrone

Unused channels

You should wire unused channels as shown in the following table. This optimizes interference immunity of the analog input module.

Measuring range	M+/ M-	M_ana
Voltage	short-circuit	connect with M-
Current / 4-wire transducer	leave open	connect with M-
Current / 2-wire transducer	leave open	connect with M

As certain programmed inputs may remain unused due to the channel group configuration, make allowances for the special features of these inputs outlined below in order to be able to use the diagnostics functions at these used channels:

- **Measuring range 1 V to 5 V:** wire the used input and unused input of the same channel group in parallel.
- **Current measurement, 2-wire transducer:** There are two options of wiring the channel circuit.

  a) Open unused inputs; channel group diagnostics disabled. If you were to enable diagnostics, the analog module would trigger a single diagnostic interrupt, and light up its SF LED.

  b) Loading the unused input using a 1.5 kΩ to 3.3 kΩ resistor. This allows you to enable diagnostics for this channel group.
- **Current measurement 4 mA to 20 mA, 4-wire transducer:** wire the used input and unused input of the same channel group in series.

Line continuity check for the 4 mA to 20 mA measuring range

If you configured a measuring range of 4 mA to 20 mA, and **enabled the line continuity check**, the analog input module logs a wire-break event to diagnostics data when the current drops below 1.185 mA.

The module also triggers a diagnostics interrupt if this function is enabled in the program.

A wire break can only be signaled by means of the lit SF LED and the diagnostic bytes must be evaluated in the user program if diagnostics interrupts are disabled.

If you configured a measuring range of 4 mA to 20 mA, **disabled** the line continuity check, and enabled diagnostic interrupts, the module triggers a diagnostic interrupt when the underflow value is reached.

6.6 Analog input module SM 331; AI 8 x 13 Bit; (6ES7331-1KF02-0AB0)

Order number

6ES7331-1KF02-0AB0

Properties

- 8 inputs in 8 channel groups
- Programmable resolution at each channel group (12 bits + sign)
- Programmable measurement type per channel group:
  - Voltage
  - Current
  - Resistance
  - Temperature
- Any measuring range per channel
- Motor protection / temperature monitoring with PTC in accordance with IEC 60034-11-2 type A
- Temperatures recorded via KTY83/110, KTY84/130 silicon temperature sensors

Terminal assignment

The diagrams below show various wiring options. These examples apply to all channels (channel 0 to 7).

Note

When connecting voltage and current transducers, make sure that the maximum permitted common-mode voltage C_{MV} of 2 V is not exceeded between the inputs. Prevent measuring errors by interconnecting the corresponding M- terminals.

Wiring: Voltage measurement

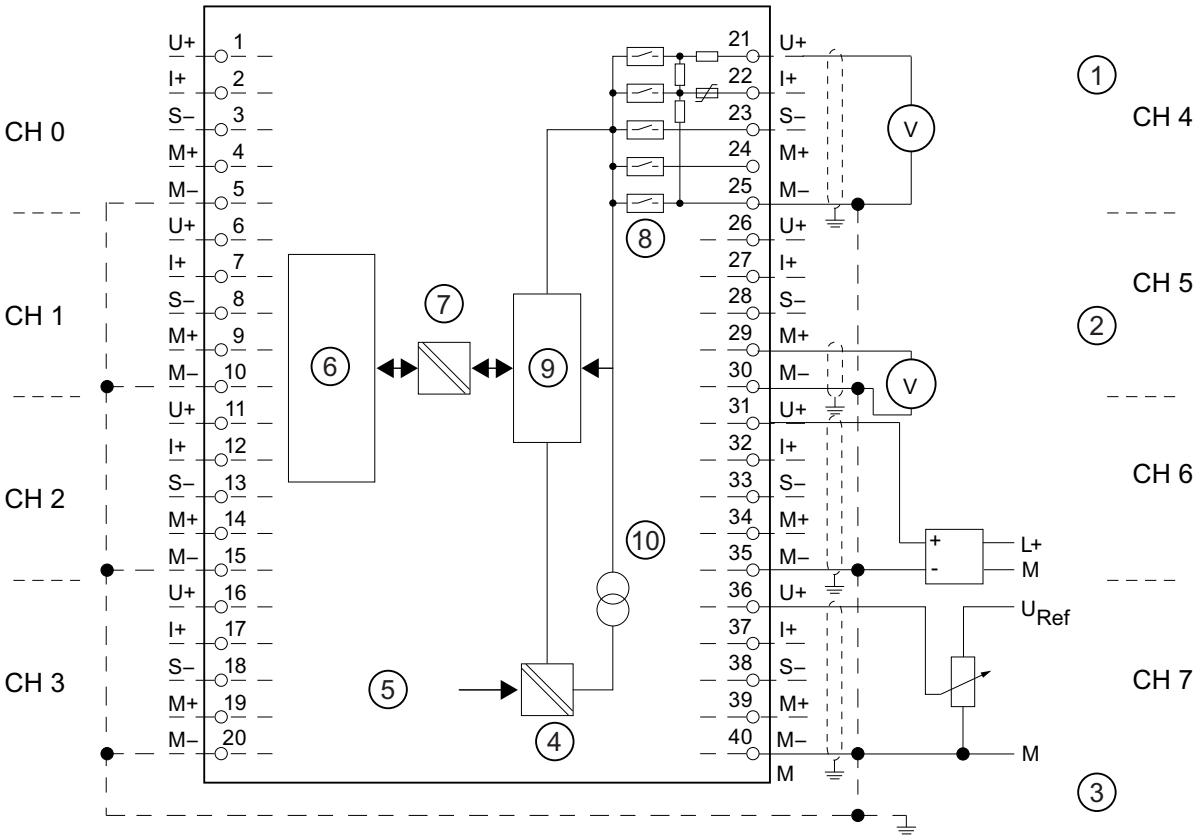

① Voltage measurement (± 5 V, ±10 V, 1 V to 5 V, 0 V to 10 V)
② Voltage measurement (± 50 mV, ± 500 mV, ± 1 V) (note the input resistance defined in the technical data)
③ Equipotential bonding
④ Internal supply
⑤ + 5 V from backplane bus
⑥ Logic and backplane bus interface
⑦ Electrical isolation
⑧ Multiplexer
⑨ Analog to Digital Converter (ADC)
⑩ Current source

Figure 6-10 Block diagram and terminal diagram

Wiring: 2-wire and 4-wire transducers for current measurement

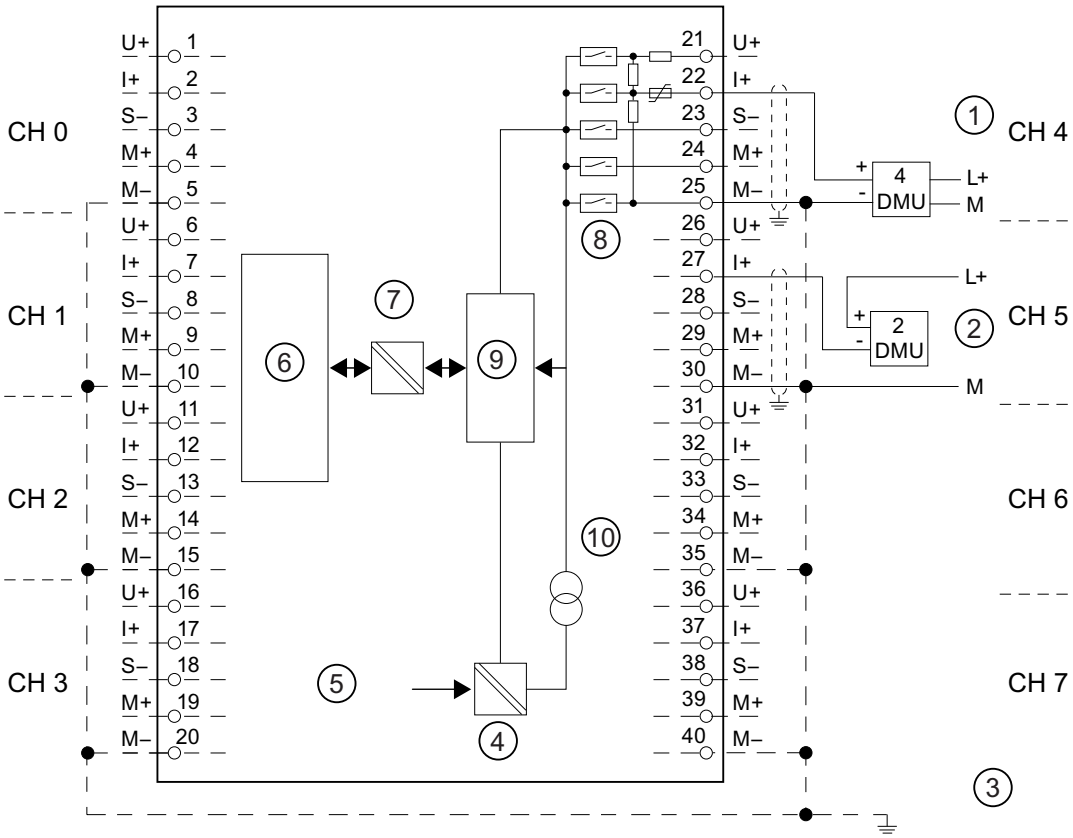

① 4-wire transducer (0/4 mA to 20 mA or ± 20 mA)
② 2-wire transducer (4 mA to 20 mA)
③ Equipotential bonding
④ Internal supply
⑤ + 5 V from backplane bus
⑥ Logic and backplane bus interface
⑦ Electrical isolation
⑧ Multiplexer
⑨ Analog to Digital Converter (ADC)
⑩ Current source

Figure 6-11 Block diagram and wiring diagram

Wiring: Resistance measurement with 2-, 3- and 4-wire connection

The following connection possibilities also apply to silicon temperature sensors and PTCs.

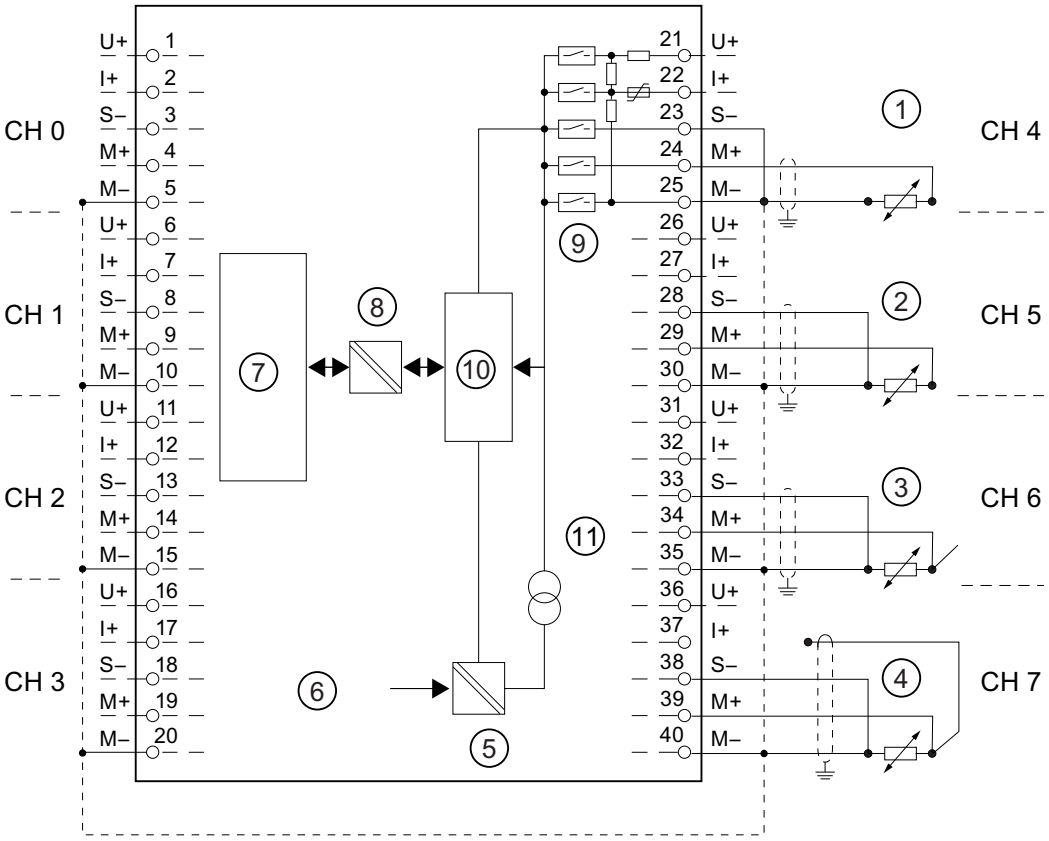

① 2-wire connection. Insert a bridge between M and S (no line resistance compensation).
② 3-wire connection
③ 4-wire connection. The fourth line may not be wired (remains unused)
④ 4-wire connection. The fourth line is routed to the terminal strip in the cabinet but is not wired.
⑤ Internal supply
⑥ + 5 V from backplane bus
⑦ Logic and backplane bus interface
⑧ Electrical isolation
⑨ Multiplexer
⑩ Analog to Digital Converter (ADC)
⑪ Current source

Figure 6-12 Block diagram and terminal diagram

Note

It is not necessary to interconnect the M- terminals when measuring using resistors, resistance thermometers, PTCs, or silicon temperature sensors. However, interconnection of the M- terminals may enhance interference immunity.

Technical specifications

Technical specifications		
Dimensions and weight		
Dimensions W x H x D (mm)	40 x 125 x 117	
Weight	ca. 250 g	
Module-specific data		
Supports isochronous mode	no	
Number of inputs • with resistive transducers	8 8	
Cable length • shielded	 max. 200 m max. 50 m at 50 mV	
Voltages, currents, electrical potentials		
Constant current for resistive transducers • Resistance thermometer and resistance measurements 0 Ω to 600 Ω • Resistance measurement 0 to 6 kΩ, PTC, silicon temperature sensors	 0.83 mA (pulsed) 0.25 mA (pulsed)	
Electrical isolation • between channels and the backplane bus • between channels	 yes no	
Maximum potential difference • between inputs (CMV) • Between the inputs and $M_{internal}$ (V_{iso})	 2.0 VDC 75 VDC / 60 VAC	
Isolation test voltage	500 VDC	
Current consumption • from the backplane bus	 max. 90 mA	
Power loss of the module	typ. 0.4 W	
Generation of analog values		
Measuring principle	Integrating	
Integration/conversion time/resolution (per channel)		
• programmable	yes	
• Interference frequency suppression at interference frequency f1 in Hz	50	60
• Integration time in ms	60	50
• Basic conversion time, including the integration time in ms	66	55
Additional conversion time for resistance measurements in ms	66	55
• Resolution in bits (including overshoot range)	13 bits	13 bits

Technical specifications		
Interference frequency suppression, error limits		
Interference frequency suppression at f = n (f1 ± 1 %), (f1 = interference frequency) n=1.2		
• Common mode interference (V_{CM} < 2 V) • Seriesmode interference (peak value < rated input range)	> 86 dB > 40 dB	
Crosstalk between inputs	> 50 dB	
Operational limit (across entire temperature range, relative to themeasurement range end value in the selected input range)		
• Voltage input	± 5 V	± 0,6 %
	± 10 V 1 V to 5 V 0 V to 10 V ± 50 mV ± 500 mV ±1 V	± 0,5 %
• Current input	± 20 mA 0 mA to 20 mA 4 mA to 20 mA	± 0,5 %
• Resistor/PTC	0 kΩ to 6 kΩ 0 Ω to 600 Ω PTC	± 0,5 % ± 0,5 % ± 0,5 %
• Resistance thermometer/silicon temperature sensors	Pt 100 Ni 100 Standard	± 1.2 K
	Pt 100 Ni 100 Klima	± 1 K
	Ni 1000, LG-Ni 1000 Standard	± 1 K
	Ni 1000 LG-Ni 1000 Klima	± 1 K
	KTY83/110 KTY84/130	± 3.5 K ± 4.5 K

Technical specifications		
Basic error limit (operational limit at 25 °C, relative to themeasurement range end value in the selected input range)		
• Voltage input	± 5 V	± 0,4 %
	± 10 V 1 V to 5 V 0 V to 10 V ± 50 mV ± 500 mV ± 1 V	± 0,3 %
• Current input	± 20 mA 0 to 20 mA 4 mA to 20 mA	± 0,3 %
• Resistor/PTC	0 kΩ to 6 kΩ 0 Ω to 600 Ω PTC	± 0,3 % ± 0,3 % ± 0,3 %
• Resistance thermometer/silicon temperature sensors	Pt 100 Ni 100 Standard	± 1 K
	Pt 100 Ni 100 Klima	± 0.8 K
	Ni 1000 LG-Ni 1000 Standard	± 0.8 K
	Ni 1000 LG-Ni 1000 Klima	± 0.8 K
	KTY83/110 KTY84/130	± 2 K ± 2.7 K
Temperature error (relative to input range)	± 0.006 %/K / 0.006 K/K	
Linearity error (relative to input range)	± 0.1 % / 0.1 K	
Repeat accuracy (in transient state at 25 °C, relative to input range)	± 0.1 % / ± 0.1 K	
Status, interrupts, diagnostics		
Interrupts	none	
Diagnostic functions	none	

Technical specifications		
Sensor selection data		
Input ranges (rated values) / input impedance		
• Voltage	± 50 mV ± 500 mV ± 1 V ± 5 V ± 10 V 1 V to 5 V 0 V to 10 V	100 kΩ
• Current	± 20 mA 0 mA to 20 mA 4 mA to 20 mA	100 Ω
• Resistor/PTC	0 kΩ to 6 kΩ 0 Ω to 600 Ω PTC	100 MΩ
• Resistance thermometer/silicon temperature sensors	Pt 100 Ni 100 Ni 1000 LG-Ni 1000 Standard / Klima KTY83/110 KTY84/130	100 MΩ
Maximum voltage at voltage input U+ (destruction limit)	max. 30 V, continuous	
Maximum voltage at voltage inputs M+, M-, S- (destruction limit)	max. 12 V continuous; 30 V for a duration of max. 1 s	
Maximum current at current input I+ (destruction limit)	40 mA	
Wiring of the signal sensors	using a 40pin front connector	
• for voltage measurement • for current measurement – as 2-wire transducer – as 4-wire transducer	supported supported, with external supply supported	
• for resistance measurement with 2-wire connection with 3-wire connection with 4-wire connection	 supported supported supported	
Characteristics linearization	programmable	
• for resistance thermometers	Pt 100 Standard / Klima Ni 100 Standard / Klima Ni 1000 Standard / Klima LG-Ni 1000 Standard / Klima	
• Technical unit of temperature measurement	Degrees Centigrade, degrees Fahrenheit, Kelvin	

6.6.1 Measurement types and measuring ranges

Introduction

The measurement type and range is configured at the "measuring type" parameter in *STEP 7*.

Selected type of measurement	Measuring range
Voltage V:	± 50 mV ± 500 mV ± 1 V ± 5 V 1 V to 5 V 0 V to 10 V ± 10 V
Current I	0 mA to 20 mA 4 mA to 20 mA ± 20 mA
resistance (4-wire connection) R-4L	6 kΩ 600 Ω PTC
Thermal resistance RTD-4L (linear, 4-wire connection) (temperature measurement) Silicon temperature sensors	Pt 100 Klima / Standard Ni 100 Klima / Standard Ni 1000 Klima / Standard LG-Ni 1000 Klima / Standard KTY83/110 KTY84/130

6.6.2 Programmable parameters

Introduction

You will find a description of the general procedure for assigning parameters to analog modules in section Programming analog modules (Page 307).

Parameter

Table 6- 17 Overview of the parameters of SM 331; AI 8 x 13 Bit

Parameters	Range of values	Default	Parameter type	Scope
Measurement • Measurement type	disabled Voltage V Current I Resistance R, PTC Thermal resistance RTD, silicon temperature sensors	V	dynamic	Channel
• Measuring range	Voltage ± 50 mV; ± 500 mV; ±1 V; 1 V to 5 V ± 5 V; 0 V to 10 V; ± 10 V	± 10 V		
	Current 0 mA to 20 mA; 4 mA to 20 mA; ± 20 mA	± 20 mA		
	Resistance 0 Ω to 600 Ω; 0 kΩ to 6 kΩ; PTC	600 Ω		
	Thermoelectric resistance (linear) Pt 100 Klima / Standard Ni 100 Klima / Standard Ni 1000 Klima / Standard LG-Ni 1000 Klima / Standard KTY83/110 KTY84/130	Pt 100 Standard		
• Temperature coefficient	Pt 100 0.003850 Ω/Ω/ °C (IST-90) Ni 100 / Ni 1000 0.006180 Ω/Ω/ °C LG-Ni 1000 0.005000 Ω/Ω/ °C	0,003850		
• Interference frequency suppression	50 Hz; 60 Hz	50 Hz		Module
• Temperature unit	Degrees Centigrade, degrees Fahrenheit, Kelvin*	degrees Centigrade		
* only Pt 100 Standard, Ni 100 Standard, Ni 1000 Standard, LG-Ni 1000 Standard				

6.6.3 Additional information on SM 331; AI 8 x 13 Bit

Using the module

The spare parts of the SM 331-1KF02 are compatible with the SM 331-1KF01 and are configured with HSP 2067. HSP 2067 can be installed for STEP7 V5.4, SP5 and higher and is included for STEP7 V5.4, SP6 and higher.

Unused channels

Set the "disabled" value at the "measurement type" parameter for unused channels. This setting reduces module cycle times.

Interconnect the M- terminals of unused channels.

Using PTC resistors

PTCs are suitable for monitoring the temperature of or providing thermal protection for complex drives and transformer windings. The module has no analog values when PTC resistances are used. Status information on fixed temperature ranges are displyed instead of analog values.

- When setting the parameters, select measurement type R "Resistance" and measuring range "PTC".
- Connect the PTC (see "Terminal diagram for resistance measurement").
- Use PTC resistors that comply with IEC 60034-11-2 (previously, PTC thermistors that complied with DIN/VDE 0660, Part 302).
- Sensor data for the PTC resistor:

Property	Technical specifications	Comment
Switching points	Response to rising temperature	
	< 550 Ω	Normal range: Bit 0 = "0", bit 2 = "0" (in the PII)
	550 Ω to 1650 Ω	Advance warning range: Bit 0 = "0", bit 2 = "1" (in the PII)
	> 1650 Ω	Actuating range: Bit 0 = "1", bit 2 = "0" (in the PII)
	Response to falling temperature	
	> 750 Ω	Actuating range: Bit 0 = "1", bit 2 = "0" (in the PII)
	750 Ω to 540 Ω	Advance warning range: Bit 0 = "0", bit 2 = "1" (in the PII)
	< 540 Ω	Normal range: Bit 0 = "0", bit 2 = "0" (in the PII)
(RRT-5) °C (RRT+5) °C (RRT+15) °C Measurement voltage Voltage at PTC	Max. 550 Ω Min. 1,330 Ω Min. 4,000 Ω Max. 7.5 V	RRT = Rated response temperature

- Assignment in the process image input (PII)

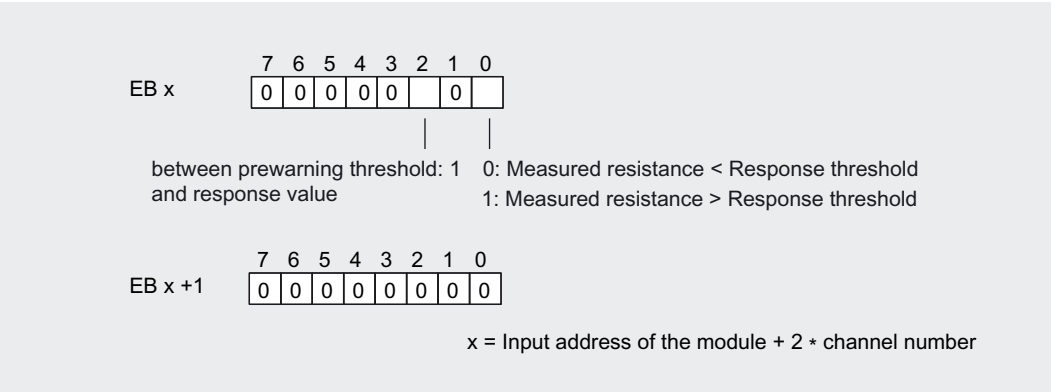

- Notes on programming

Note

Only bits 0 and 2 in the process image input are relevant for evaluation. You can use bits 0 and 2 to monitor the temperature of a motor, for example.

Bits 0 and 2 in the process image input cannot be saved. When assigning parameters, make sure that the motor, for example, starts up in a controlled manner (by means of an acknowledgment).

Bits 0 and 2 can never be set at the same time; they are set one after the other.

Using silicon temperature sensors

Silicon temperature sensors are commonly used to detect temperatures in motors.

- When assigning the parameters, select measurement type "thermoresistor" and measuring range "KTY83/110" or "KTY84/130".
- Connect the temperature sensor (see "Terminal diagram for resistance measurement").

Use temperature sensors which comply with the Product Specifications published by Philips Semiconductors.

- KTY83 series (KTY83/110)
- KTY84 series (KTY84/130)

Also take note of the accuracy of the temperature sensors.

The temperature is specified in 0.1 degrees C, 0.1 degrees K, and/or 0.1 degrees F, see section Representation of the values for analog input channels (Page 275).

6.7 Analog input module SM 331; AI 8 x 12 bit;(6ES7331-7KF02-0AB0)

6.7.1 Analog input module SM 331; AI 8 x 12 bit;(6ES7331-7KF02-0AB0)

Order number

6ES7331-7KF02-0AB0

Properties

- 8 inputs in 4 channel groups
- Programmable measurement type at each channel group
  - Voltage
  - Current
  - Resistance
  - Temperature
- Programmable resolution at each channel group (9/12/14 bits + sign)
- Any measuring range selection per channel group
- Programmable diagnostics and diagnostic interrupt
- Programmable limit value monitoring for 2 channels
- Programmable hardware interrupt when limit is exceeded
- Electrically isolated to CPU and load voltage (not for 2-wire transducers)

Resolution

The measured value resolution is directly proportional to the selected integration time, that is, the measured value resolution increases in proportion to length of the integration time at the analog input channel.

Diagnostics

For information on diagnostics messages at the "group diagnostics" parameter, refer to chapter Diagnostic messages of analog input modules.

Hardware interrupts

Hardware interrupts for channel groups 0 and 1 can be programmed in *STEP 7*. However, set a hardware interrupt only for the first channel of a channel group, that is, either at channel 0, or at channel 2

Terminal assignment

The diagrams below show various wiring options The input impedance depends on the setting of the measuring range module, see table *Measurement types and ranges*.

Wiring: Voltage measurement

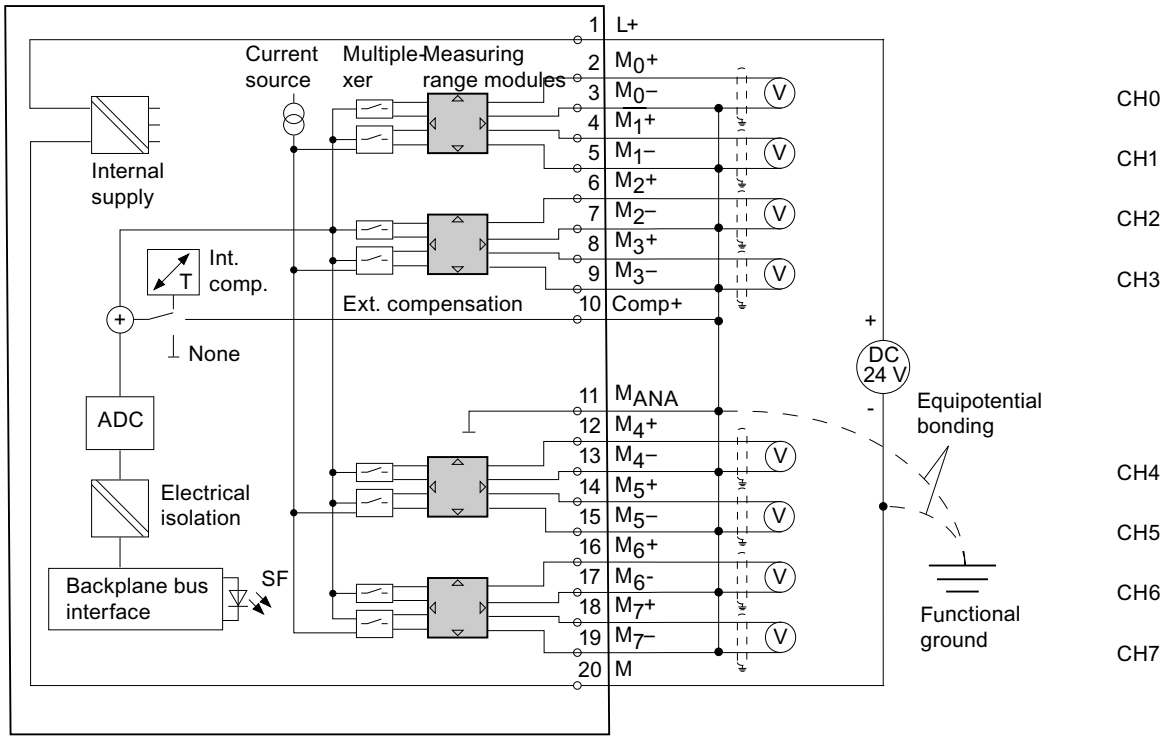

Figure 6-13 Block diagram and wiring diagram

Measuring range module settings

Measuring range	Measuring range module setting
± 80 mV ± 250 mV ± 500 mV ± 1,000 mV	A
± 2.5 V ± 5 V 1 V to 5 V ± 10 V	B

Wiring: 2-wire and 4-wire transducers for current measurement

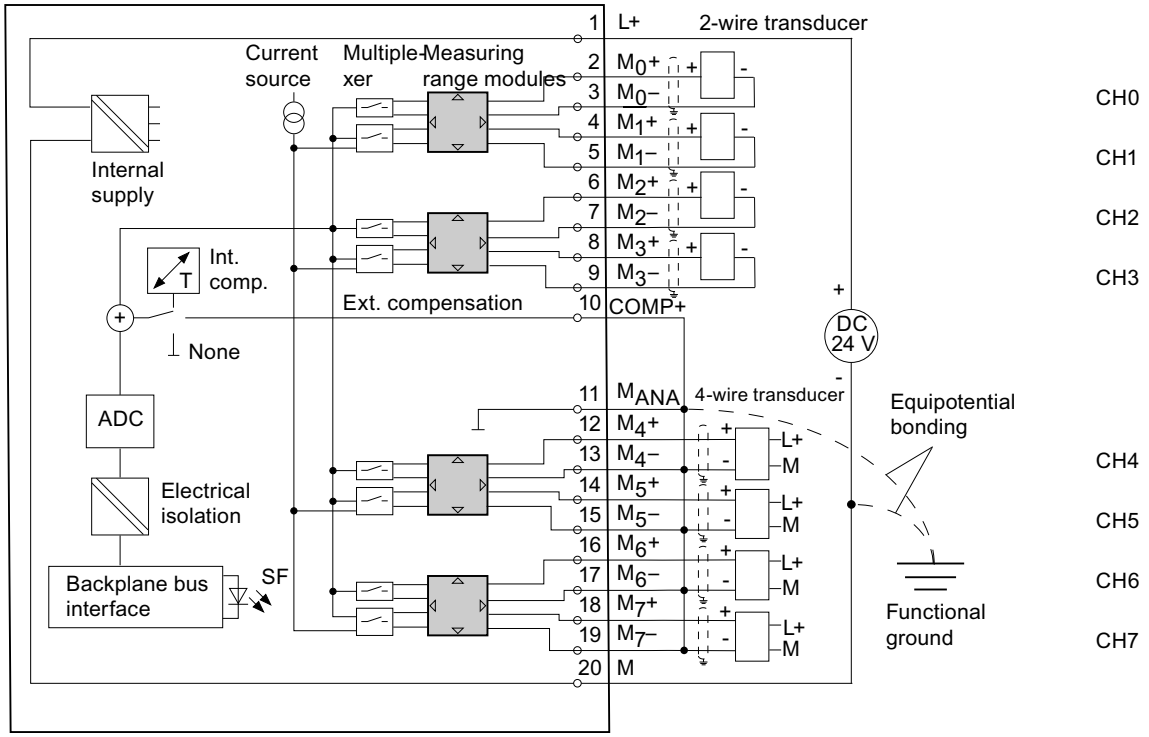

Figure 6-14 Block diagram and wiring diagram

Note

The interconnection between M_{ANA} and M- (terminals 11, 13, 15, 17, 19) is not required when using grounded 4-wire transducers with non-isolated supply.

Measuring range module settings

Measuring range		Measuring range module setting
2-wire transducer	4 mA to 20 mA	D
4-wire transducer	± 3.2 mA ± 10 mA 0 mA to 20 mA 4 mA to 20 mA ± 20 mA	C

CAUTION

Measuring range module in "Current" position

Any voltage measurement will destroy the measuring range module if "current" measuring mode is set.

Wiring: 2-, 3- and 4-wire connection of resistance transducers or thermoresistors

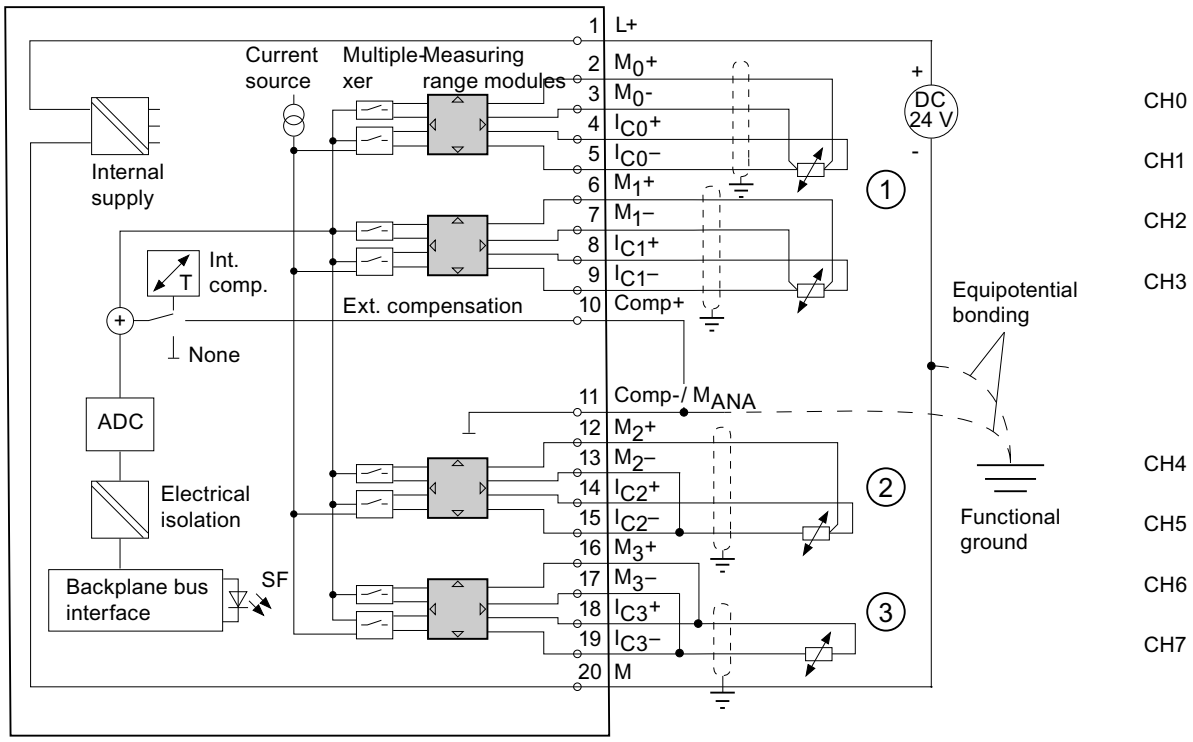

① 4-wire connection
② 3-wire connection, no compensation for line resistors
③ 2-wire connection, no compensation for line resistors

Figure 6-15 Block diagram and wiring diagram

Measuring range module settings

Measuring range		Measuring range module setting
150 Ω 300 Ω 600 Ω		A
Thermoresistor (linear, 4-wire connection) (temperature measurement) RTD-4L	Pt 100 Klima Ni 100 Klima Pt 100 Standard Ni 100 Standard	A

Note

- "Resistance measurement" is only available at one channel per group. The "2nd" channel of the group is used accordingly for current measuring mode (I_C). The "1st" channel of the group returns the measured value. The "2nd" channel of the group is assigned the default overflow value "$7FFF_H$."
- There is no compensation for power resistors for "2- and 3-wire connections".

Wiring: Thermocouples with external compensation

Insert a bridge between Comp+ and M_{ANA} when using the internal compensation.

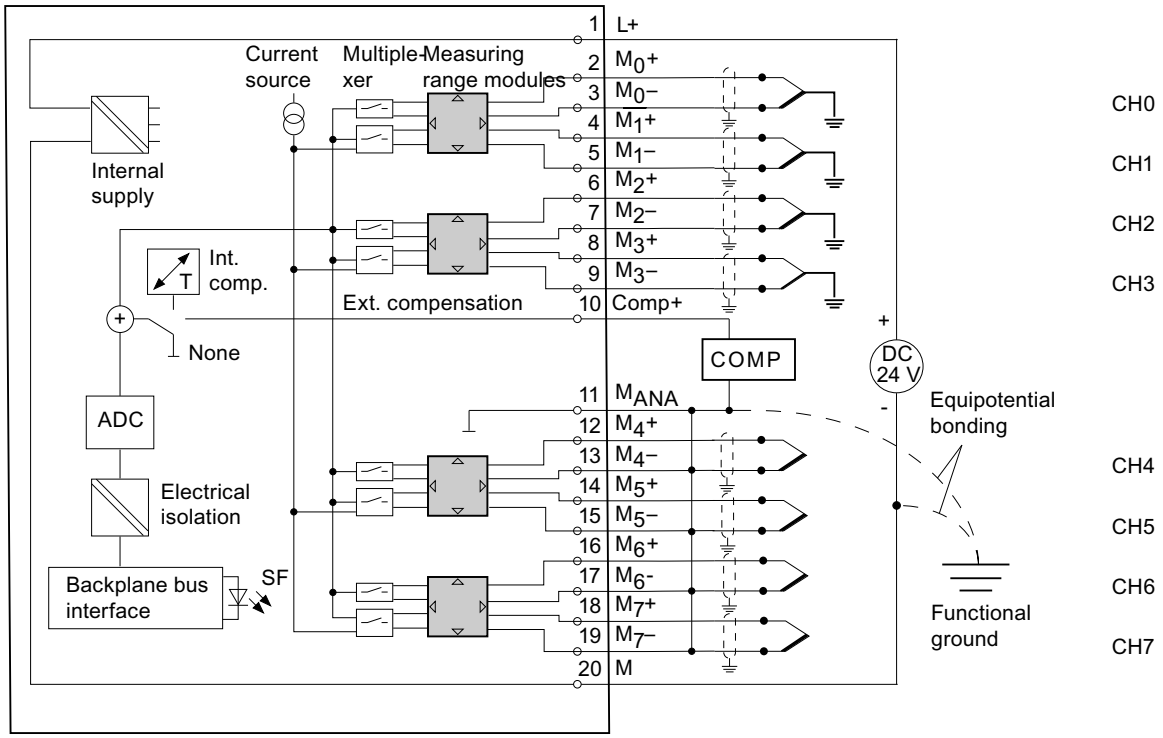

Figure 6-16 Block diagram and wiring diagram

Measuring range module settings

Measuring range		Measuring range module setting
Thermocouple TC-I (internal comparison) (thermal voltage measurement) Linearization is ignored	Type N [NiCrSi-NiSi] Type E [NiCr-CuNi] Type J [Fe-CuNi] Type K [NiCr-Ni] Type L [Fe-CuNi]	A
Thermocouple TC-E (external comparison) (thermovoltage measurement) Linearization is ignored		
Thermocouple (linear, internal comparison) (temperature measurement) TC-IL	Type N [NiCrSi-NiSi] Type E [NiCr-CuNi] Type J [Fe-CuNi] Type K [NiCr-Ni] Type L [Fe-CuNi]	A
Thermocouple (linear, external comparison) (temperature measurement) TC-EL		

Note

- An interconnection of M- and M_{ANA} is prohibited when using grounded thermocouples. In this case, you must ensure that low-resistance equipotential bonding is in place so that the permitted common-mode voltage is not exceeded.
- Interconnect M- and M_{ANA} when using non-grounded thermocouples

Technical specifications

Technical specifications	
Dimensions and weight	
Dimensions W x H x D (mm)	40 x 125 x 117
Weight	approx. 250 g
Module-specific data	
Supports isochronous mode	No
Number of inputs • with resistive transducers	8 4
Cable length • shielded	max. 200 m max. 50 m at 80 mV and with thermocouples
Voltages, currents, electrical potentials	
Rated electronics supply voltage L + • Reverse polarity protection	24 VDC Yes
Transducer power supply • Supply current • short circuit-proof	 max. 60 mA (per channel) Yes
Constant current for resistive transducers	typ. 1.67 mA (pulsed)
Electrical isolation • between channels and the backplane bus • between channels and electronics power supply – Not for 2-wire transducers	 Yes Yes
Maximum potential difference • between inputs and M_{ANA} (V_{CM}) – at signal = 0 V • between inputs (V_{CM}) • between M_{ANA} and $M_{internal}$ (V_{iso})	 typ. 2.5 VDC (> 2.3 VDC) typ. 2.5 VDC (> 2.3 VDC) 75 VDC / 60 VAC
Isolation test voltage	500 VDC
Current consumption • from the backplane bus • from load voltage L+	 max. 50 mA max. 30 mA (without 2-wire transducer)
Power loss of the module	typ. 1 W

Technical specifications				
Generation of analog values				
Measuring principle	Integrating			
Integration/conversion time/resolution (per channel)				
• programmable	Yes			
• Integration time in ms	2.5	$16^2/_3$	20	100
• Basic conversion time, including the integration time in ms	3	17	22	102
Additional conversion time for resistance measurement, in ms or	1	1	1	1
additional conversion time for wire-break monitoring in ms or	10	10	10	10
additional conversion time for resistance measurements **and** wire-break monitoring in ms	16	16	16	16
• Resolution in bits (including overrange)	9 bits	12 bits	12 bits	14 bits
• Interference frequency suppression at interference frequency f1 in Hz	400	60	50	10
• Basic execution time of the module in ms (all channels enabled)	24	136	176	816
Measured value smoothing	none			
Interference frequency suppression, error limits				
Interference frequency suppression at F = n (f1 ± 1 %), (f1 = interference frequency)				
• Common mode interference (V_{CM} < 2.5 V) • Seriesmode interference (peak interference value < rated input range)	> 70 dB > 40 dB			
Crosstalk between inputs	> 50 dB			
Operational limit (across entire temperature range, relative to the measurement range end value in the selected input range)				
• Voltage input	80 mV 250 mV to 1,000 mV 2.5 V to 10 V		± 1 % ± 0.6 % ± 0.8 %	
• Current input	3.2 mA to 20 mA		± 0.7 %	
• Resistance	150 Ω; 300Ω; 600 Ω		± 0.7 %	
• Thermocouple	Types E, N, J, K, L		± 1, 1 %	
• Resistance thermometer	Pt 100/Ni 100		± 0.7 %	
	Pt 100 Klima		± 0.8 %	
Basic error limit (operational limit at 25 °C, relative to the measurement range end value in the selected input range)				
• Voltage input	80 mV 250 mV to 1,000 mV 2.5 V to 10 V		± 0.7 % ± 0.4 % ± 0.6 %	
• Current input	3.2 mA to 20 mA		± 0.5 %	
• Resistance	150 Ω; 300 Ω; 600 Ω		± 0.5 %	

Technical specifications		
• Thermocouple	Types E, N, J, K, L	± 0.7 %
• Resistance thermometer	Pt 100/Ni 100	± 0.5 %
	Pt 100 Klima	± 0.6 %
Temperature error (relative to input range)	± 0.005%/K	
Linearity error (relative to input range)	± 0.05 %	
Repeat accuracy (in settled state at 25 °C, relative to input range)	± 0.05 %	
Temperature error of internal compensation	± 1 %	
Status, interrupts, diagnostics		
Interrupts • Limit interrupt • Diagnostic interrupt	programmable Channels 0 and 2 programmable	
Diagnostic functions • Group error display • Reading diagnostics information	programmable red LED (SF) supported	
Sensor selection data		
Input ranges (rated values) / input impedance		
• Voltage	± 80 mV ± 250 mV ± 500 mV ± 1,000 mV ± 2.5 V ± 5 V 1 V to 5 V ± 10 V	10 MΩ 10 MΩ 10 MΩ 10 MΩ 100 kΩ 100 kΩ 100 kΩ 100 kΩ
• Current	± 3.2 mA ± 10 mA ± 20 mA 0 mA to 20 mA 4 mA to 20 mA	25 Ω 25 Ω 25 Ω 25 Ω 25 Ω
• Resistance	150 Ω 300 Ω 600 Ω	10 MΩ 10 MΩ 10 MΩ
• Thermocouples	Types E, N, J, K, L	10 MΩ
• Resistance thermometer	Pt 100, Ni 100	10 MΩ
Maximum voltage at voltage input (destruction limit)	max. 20 V, continuous 75 V for the duration of max. 1 s (duty factor 1:20)	
Maximum current at current input (destruction limit)	40 mA	

Technical specifications	
Wiring of the signal sensors	using a 20-pin front connector
• for voltage measurement	supported
• for current measurement as 2-wire transducer as 4-wire transducer	 supported supported
• For thermoresistor/resistance measurement with 2-wire connection	 Supported, cable resistances are not compensated
with 3-wire connection	Supported, cable resistances are not compensated
with 4-wire connection	Supported, cable resistances are compensated
• Load of the 2-wire transducer	max. 820 Ω
Characteristics linearization • for thermocouples	programmable Types E, N, J, K, L
• for resistance thermometers	Pt 100 (Standard and Klima range) Ni 100 (Standard and Klima range)
Temperature compensation • Internal temperature compensation	programmable supported
• External temperature compensation with compensating box	supported
• Compensation for 0 °C reference junction temperature	supported
• Technical unit of temperature measurement	degrees Centigrade

6.7.2 Measurement types and ranges

Introduction

Module SM 331; AI 8 x 12 Bit has measuring range modules

The measurement type and range is configured at the "measuring range" parameter in *STEP 7*.

The default setting of the module is "voltage" measurement with "± 10V" range. You can use these default settings without having to program the SM 331; AI 8 x 12 Bit in *STEP 7*.

Measuring range modules

You may have to change the position of the measuring range modules to suit the measurement type and range (see the chapter *Setting the measuring types and ranges of analog input channels*). The necessary settings are also available on the module's imprint. Mark the position of the measuring range module on the front door (see figure).

Range:

A	B
C	D

Measurement types and ranges

Table 6- 18 Measurement types and ranges

Selected type of measurement	Measuring range (type of sensor)	Measuring range module settings
Voltage V	± 80 mV ± 250 mV ± 500 mV ± 1000 mV	A
	± 2.5 V ± 5 V 1 V to 5 V ± 10 V	B
Thermocouple TC-I (internal comparison) (thermal voltage measurement) Linearization is ignored	Type N [NiCrSi-NiSi] Type E [NiCr-CuNi] Type J [Fe-CuNi] Type K [NiCr-Ni] Type L [Fe-CuNi]	A
Thermocouple TC-E (external comparison) (thermovoltage measurement) Linearization is ignored		
Thermocouple (linear, internal comparison) (temperature measurement) TC-IL	Type N [NiCrSi-NiSi] Type E [NiCr-CuNi] Type J [Fe-CuNi] Type K [NiCr-Ni] Type L [Fe-CuNi]	A
Thermocouple (linear, external comparison) (temperature measurement) TC-EL		
Current (2-wire transducer) 2DMU	4 mA to 20 mA	D
Current (4-wire transducer) 4DMU	± 3.2 mA ± 10 mA 0 mA to 20 mA 4 mA to 20 mA ± 20 mA	C
Resistance (4-wire connection) R-4L	150 Ω 300 Ω 600 Ω	A
Thermoresistor (linear, 4-wire connection) (temperature measurement) RTD-4L	Pt 100 Klima Ni 100 Klima Pt 100 Standard Ni 100 Standard	A

Channel groups

The channels of SM 331; AI 8 x 12 Bit are arranged in four groups of two channels. You can assign parameters only to one channel group.

SM 331; AI 8 x 12 Bit is equipped with one measuring range module per channel group.

The table below shows the relevant configuration of channel groups. The channel group number is required to program SFC parameters in the user program.

Table 6- 19 Assignment of SM 331; AI 8x12 bit channels to channel groups

Channels ...	...form one channel group each
Channel 0	Channel group 0
Channel 1	
Channel 2	Channel group 1
Channel 3	
Channel 4	Channel group 2
Channel 5	
Channel 6	Channel group 3
Channel 7	

See also

Programming analog modules (Page 307)

Diagnostics messages of analog input modules (Page 309)

6.7.3 Programmable parameters

Introduction

For information on programming analog modules, refer to the chapter Programming analog modules (Page 307).

Parameters

Table 6- 20 Overview of the parameters for SM 331; AI 8 x 12 Bit

Parameters	Range of values	Default	Parameter type	Scope
Enable • Diagnostics interrupt • Process interrupt when limit exceeded	 yes/no yes/no	 no no	dynamic	Module
Process interrupt trigger • High limit • Low limit	May be restricted by the measuring range from 32511 to - 32512 from - 32512 to 32511	-	dynamic	Channel
Diagnostics • Group diagnostics • with line continuity check	 yes/no yes/no	 no no	static	Channel group
Measurement • Measurement type	 disabled Voltage V 4DMU current (4-wire transducer) 2DMU current (2-wire transducer) R-4L resistance (4-wire connection) RTD-4L thermoresistor (linear, 4-wire connection) TC-I thermocouple (internal comparison) TC-E thermocouple (external comparison) TC-IL thermocouple (internal comparison) TC-EL thermocouple (linear, external comparison)	 V	dynamic	Channel or channel group
• Measuring range	See the table *Measurement types and ranges*	± 10 V		
• Noise suppression	400 Hz; 60 Hz; 50 Hz; 10 Hz	50 Hz		

6.7.4 Additional information on SM 331; AI 8 x 12 Bit

Unused channels

As certain programmed inputs may remain unused due to the channel group configuration, make allowances for the special features of these inputs outlined below in order to be able to use the diagnostics functions at these used channels:

- **Voltage measurement (except 1 V to 5V)** and for thermocouples: Short-circuit unused channels and connect these with M_{ANA}. This optimizes interference immunity of the analog input module. Set the "disabled" value at the "measurement type" parameter for unused channels. This setting reduces module cycle times. Also short-circuit the COMP input if this is not used.
- **Measuring range 1 V to 5 V:** wire the used and unused inputs of the same channel group in parallel.
- **Current measurement, 2-wire transducer:** There are two options of wiring the channel circuit.

  a) Open unused input; channel group diagnostics disabled. If you were to enable diagnostics, the analog module would trigger a single diagnostic interrupt, and light up its SF LED.

  b) Loading the unused input using a 1.5 kΩ to 3.3 kΩ resistor. This allows you to enable diagnostics for this channel group.
- **Current measurement 4 mA to 20 mA, 4-wire transducer:** wire the unused inputs of the same channel group in series.

All channels deactivated

If you disable **all** input channels of the module and enable diagnostics at the parameters of SM 331; AI 8 x 12 Bit, the module does **not** report "external auxiliary voltage missing."

Line continuity check for the 4 mA to 20 mA measuring range

If you configured a measuring range of 4 mA to 20 mA, and **enabled the line continuity check**, the analog input module logs a wire-break event to diagnostics data when the current drops below 3.6 mA.

The module also triggers a diagnostics interrupt if this function is enabled in the program.

A wire break can only be signaled by means of the lit SF LED and the diagnostic bytes must be evaluated in the user program if diagnostics interrupts are disabled.

If you configured a measuring range of 4 mA to 20 mA, **disabled** the line continuity check, and enabled diagnostic interrupts, the module triggers a diagnostic interrupt when the underflow value is reached.

Line continuity check

The line continuity check is designed only for temperature measurements (thermocouples and thermoresistors.)

See also

Representation of the values for analog input channels (Page 275)

6.8 Analog input module SM 331; AI 2 x 12 Bit; (6ES7331-7KB02-0AB0)

6.8.1 Analog input module SM 331; AI 2 x 12 Bit; (6ES7331-7KB02-0AB0)

Order number: "Standard module"

6ES7331-7KB02-0AB0

Order number: "SIPLUS S7-300 module"

6AG1331-7KB02-2AB0

Properties

- Two inputs in one channel group
- Programmable measurement type for each channel group
  - Voltage
  - Current
  - Resistance
  - Temperature
- Programmable resolution at each channel group (9/12/14 bits + sign)
- Any measuring range selection per channel group
- Programmable diagnostics and diagnostic interrupt
- Programmable limit value monitoring for one channel
- Programmable hardware interrupt when limit is exceeded
- Electrically isolated from the CPU and load voltage (not for 2DMU)

Resolution

The measured value resolution is directly proportional to the selected integration time, that is, the measured value resolution increases in proportion to length of the integration time at the analog input channel.

Diagnostics

For information on diagnostics messages at the "group diagnostics" parameter, refer to chapter Diagnostic messages of analog input modules.

Hardware interrupts

Hardware interrupts for channel groups can be programmed in *STEP 7*. However, set a hardware interrupt only for the first channel of a channel group, that is channel 0.

Terminal assignment

The diagrams below show various wiring options The input impedance depends on programmed measuring range.

Wiring: Voltage measurement

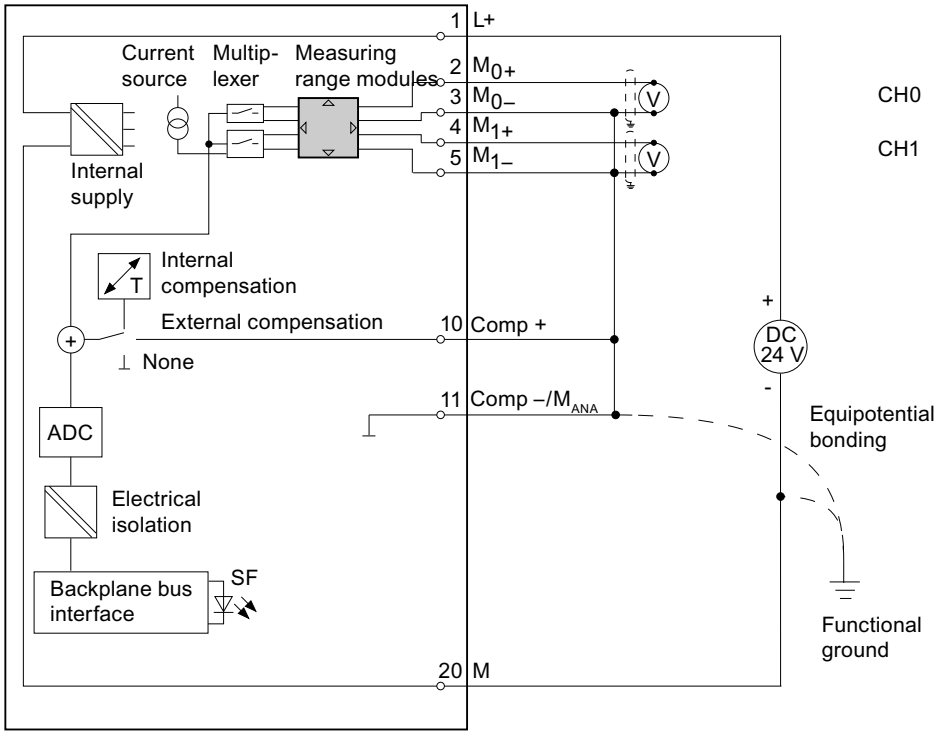

Figure 6-17 Wiring and block diagrams

Measuring range module settings

Measuring range	Measuring range module setting
± 80 mV ± 250 mV ± 500 mV ± 1,000 mV	A
± 2.5 V ± 5 V 1 V to 5 V ± 10 V	B

Wiring: Thermocouple with external compensation

Insert a bridge between Comp+ and M_{ANA} when using the internal compensation.

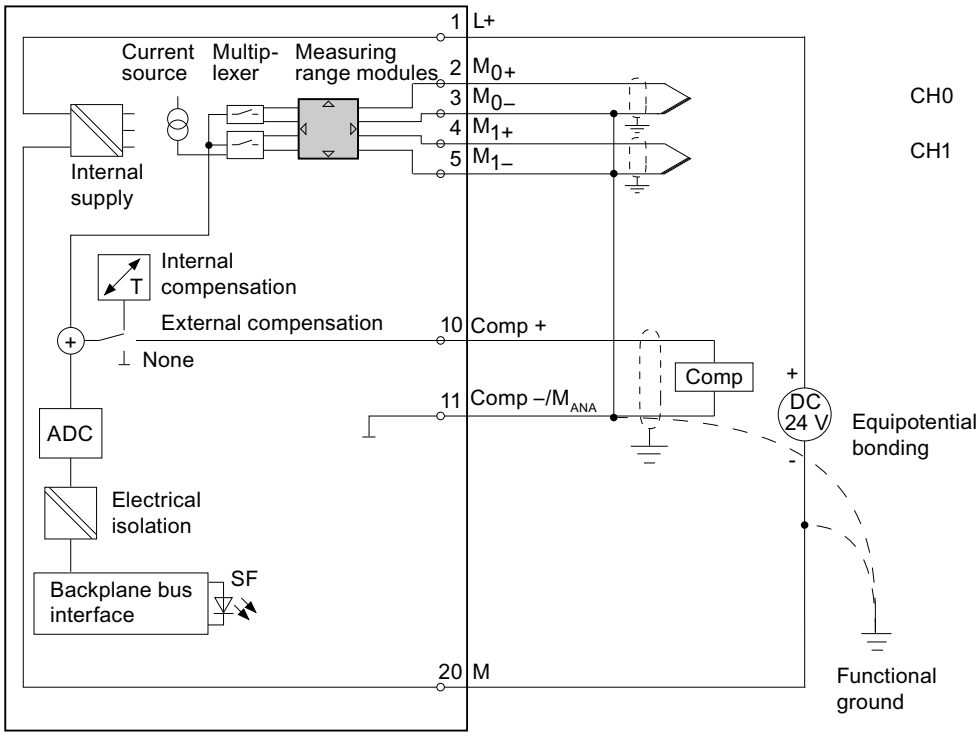

Figure 6-18 Wiring and block diagrams

Measuring range module settings

Measuring range		Measuring range module setting
TC-I: Thermocouple (internal comparison) (thermal voltage measurement)	Type N [NiCrSi-NiSi] Type E [NiCr-CuNi] Type J [Fe-CuNi] Type K [NiCr-Ni] Type L [Fe-CuNi]	A
TC-E: Thermocouples (external comparison) (thermovoltage measurement)		
TC-IL: Thermocouples (linear, internal comparison) (temperature measurement)	Type N [NiCrSi-NiSi] Type E [NiCr-CuNi] Type J [Fe-CuNi] Type K [NiCr-Ni] Type L [Fe-CuNi]	A
TC-EL: Thermocouples (linear, external comparison) (temperature measurement)	Type N [NiCrSi-NiSi] Type E [NiCr-CuNi] Type J [Fe-CuNi] Type K [NiCr-Ni] Type L [Fe-CuNi]	A

Wiring: 2-, 3- and 4-wire connection of resistance transducers or thermoresistors

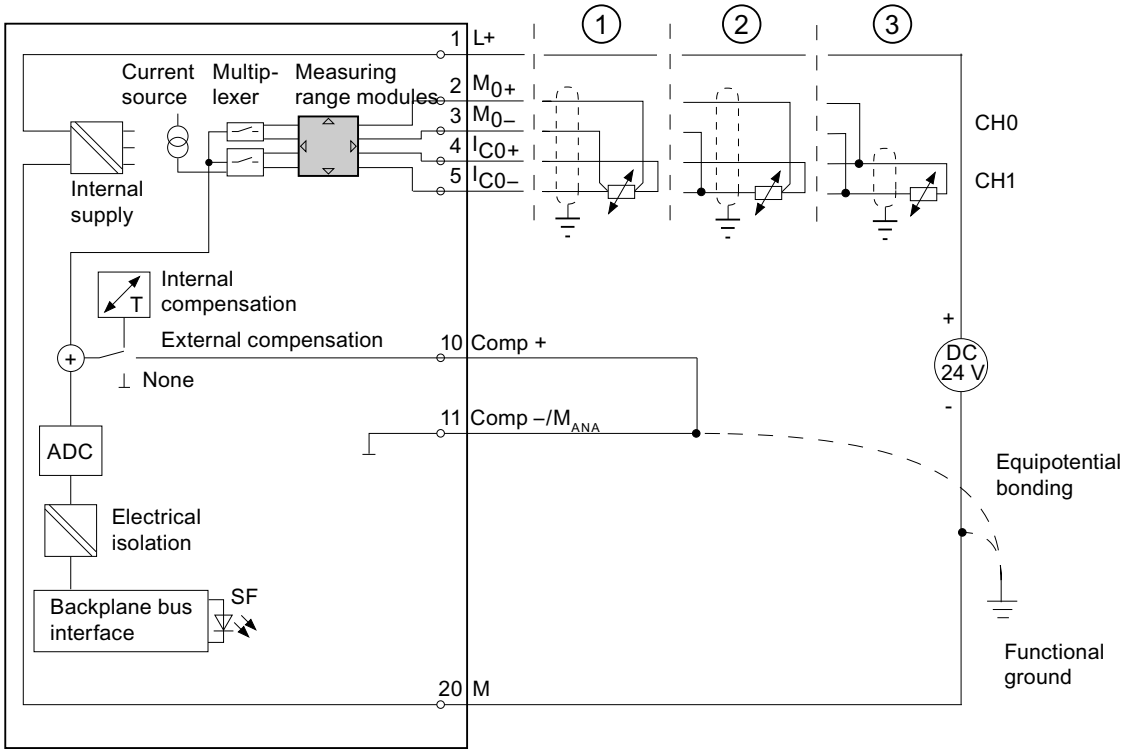

① 4-wire connection
② 3-wire connection, no compensation for line resistors
③ 2-wire connection, no compensation for line resistors

Figure 6-19 Wiring and block diagrams

Measuring range module settings

Measuring range		Measuring range module setting
150 Ω 300 Ω 600 Ω		A
RTD-4L: Thermal resistance (linear, 4-wire connection) (temperature measurement)	Pt 100 Klima Ni 100 Klima Pt 100 Standard Ni 100 Standard	A

Note

"Resistance measurement" is only available at one channel per group. The "2nd" channel of the group is used accordingly for current measuring mode (I_C).

The "1st" returns the measured value. The "2nd" channel of the group is assigned the default overflow value "$7FFF_H$."

Wiring: 2-wire and 4-wire transducers for current measurement

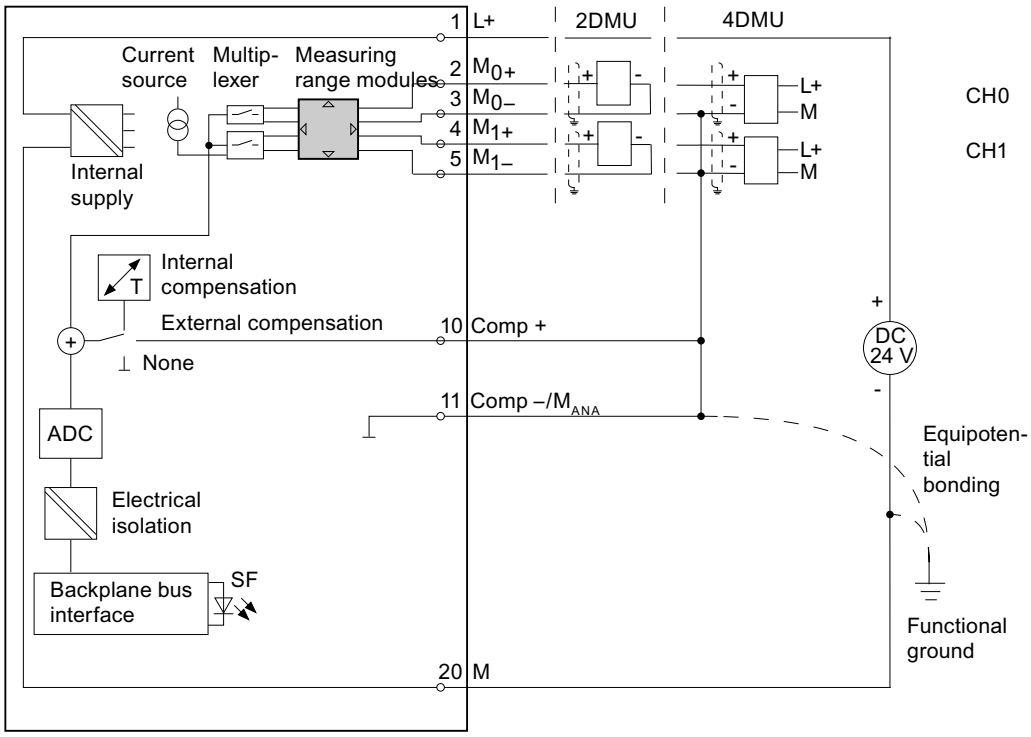

Figure 6-20 Wiring and block diagrams

Measuring range module settings

Measuring range		Measuring range module setting
2-wire transducer	4 mA to 20 mA	D
4-wire transducer	± 3.2 mA ± 10 mA 0 mA to 20 mA 4 mA to 20 mA ± 20 mA	C

CAUTION

Measuring range module in "Current" position

If "current" measuring mode is set, any voltage measurement will destroy the measuring range module.

Technical specifications

Technical specifications	
Dimensions and weight	
Dimensions W x H x D (mm)	40 x 125 x 117
Weight	approx. 250 g
Module-specific data	
Supports isochronous mode	No
Number of inputs • with resistive transducers	2 1
Cable length • shielded	max. 200 m max. 50 m at 80 mV and with thermocouples
Voltages, currents, electrical potentials	
Rated electronics supply voltage L + • Reverse polarity protection	24 VDC Yes
Transducer power supply • Supply current • short circuit-proof	 max. 60 mA (per channel) Yes
Constant current for resistive transducers	typ. 1.67 mA (pulsed)
Electrical isolation • between channels and the backplane bus • between channels and electronics power supply – Not for 2-wire transducers	 Yes Yes
Maximum potential difference • between inputs and M_{ANA} (V_{CM}) – at signal = 0 V • between inputs (V_{CM}) • between M_{ANA} and $M_{internal}$ (V_{iso})	 typ. 2.5 VDC (> 2.3 VDC) typ. 2.5 VDC (> 2.3 VDC) 75 VDC / 60 VAC
Isolation test voltage	500 VDC
Current consumption • from the backplane bus • from load voltage L+	 max. 50 mA max. 30 mA (without 2-wire transducer)
Power loss of the module	typ. 1 W

Technical specifications				
Generation of analog values				
Measuring principle	Integrating			
Integration/conversion time/resolution (per channel)				
• programmable	Yes			
• Integration time in ms	2.5	$16^2/_3$	20	100
• Basic conversion time, including the integration time in ms	3	17	22	102
Additional conversion time for resistance measurement, in ms or	1	1	1	1
additional conversion time for wire-break monitoring in ms or	10	10	10	10
additional conversion time for resistance measurements **and** wire-break monitoring in ms	16	16	16	16
• Resolution in bits (including overshoot range)	9 bits	12 bits	12 bits	14 bits
• Interference frequency suppression at interference frequency f1 in Hz	400	60	50	10
• Basic execution time of the module in ms (all channels enabled)	6	34	44	204
Measured value smoothing	none			
Interference frequency suppression, error limits				
Interference frequency suppression at f = n (f1 ± 1%), (f1 = interference frequency) n=1.2...				
• Common mode interference (V_{CM} < 2.5 V) • Seriesmode interference (peak interference value < rated input range)	> 70 dB > 40 dB			
Crosstalk between inputs	> 50 dB			
Operational limit (across entire temperature range, relative to the measurement range end value of the selected input range)				
• Voltage input	80 mV 250 mV to 1,000 mV 2.5 V to 10 V		± 1 % ± 0.6 % ± 0.8 %	
• Current input	3.2 mA to 20 mA		± 0.7 %	
• Resistance	150 Ω; 300 Ω; 600 Ω		± 0.7 %	
• Thermocouple	Types E, N, J, K, L		± 1, 1 %	
• Resistance thermometer	Pt 100/Ni 100		± 0.7 %	
	Pt 100 Klima		± 0. 8 %	
Basic error limit (operational limit at 25 °C, relative to the measurement range end value in the selected input range)				
• Voltage input	80 mV 250 mV to 1,000 mV 2.5 V to 10 V		± 0.6 % ± 0.4 % ± 0.6 %	
• Current input	3.2 mA to 20 mA		± 0.5 %	
• Resistance	150 Ω; 300 Ω; 600 Ω		± 0.5 %	

Technical specifications		
• Thermocouple	Types E, N, J, K, L	± 0.7 %
• Resistance thermometer	Pt 100/Ni 100	± 0.5 %
	Pt 100 Klima	± 0.6 %
Temperature error (relative to input range)	± 0.005%/K	
Linearity error (relative to input range)	± 0.05 %	
Repeat accuracy (in settled state at 25°C, relative to input range)	± 0.05 %	
Temperature error of internal compensation	± 1 %	
Status, interrupts, diagnostics		
Interrupts • Limit interrupt • Diagnostic interrupt	programmable Channels 0 programmable	
Diagnostic functions • Group error display • Reading diagnostics information	programmable red LED (SF) supported	
Sensor selection data		
Input ranges (rated values) / input impedance		
• Voltage	± 80 mV ± 250 mV ± 500 mV ± 1,000 mV ± 2.5 V ± 5 V 1 V to 5 V ± 10 V	10 MΩ 10 MΩ 10 MΩ 10 MΩ 100 kΩ 100 kΩ 100 kΩ 100 kΩ
• Current	± 3.2 mA ± 10 mA ± 20 mA 0 mA to 20 mA 4 mA to 20 mA	25 Ω 25 Ω 25 Ω 25 Ω 25 Ω
• Resistance	150 Ω 300 Ω 600 Ω	10 MΩ 10 MΩ 10 MΩ
• Thermocouples	Types E, N, J, K, L	10 MΩ
• Resistance thermometer	Pt 100, Ni 100	10 MΩ
Maximum voltage at voltage input (destruction limit)	max. 20 V continuous; 75 V for the duration of max. 1 s (duty factor 1:20)	
Maximum current at current input (destruction limit)	40 mA	
Wiring of the signal sensors	using a 20-pin front connector	
• for voltage measurement	supported	

Technical specifications	
• for current measurement as 2-ire transducer as 4-wire transducer	 supported supported
• For thermoresistor/resistance measurement With 2-wire connection With 3-wire connection With 4-wire connection	 Supported, cable resistances are not compensated Supported, cable resistances are not compensated Supported, cable resistances are compensated
• Load of the 2-wire transducer	max. 820 Ω
Characteristics linearization • for thermocouples • for resistance thermometers	programmable Types E, N, J, K, L Pt 100 (Standard and Klima range) Ni 100 (Standard and Klima range)
Temperature compensation • Internal temperature compensation • External temperature compensation with compensating box • Compensation for 0 °C reference junction temperature • Technical unit of temperature measurement	programmable supported supported supported degrees Centigrade

6.8.2 Measurement types and measuring ranges

Introduction

SM 331; AI 2 x 12 Bit is equipped with a measuring range module. The measurement type and range is configured at the "measuring range" parameter in *STEP 7*. You can use the default "voltage" measurement type and "± 10 V range without having to program the SM 331; AI 2 x 12 Bit in *STEP 7*.

Measuring range module

Change the position of the measuring range module to set the measurement type and range (see the chapter *Setting the measurement types and ranges of analog input channels*). The necessary settings are also available on the module's imprint. Mark the position of the measuring range module on the front door (see figure).

Range:

A	B
C	D

Table 6- 21 Measurement types and ranges

Selected type of measurement	Measuring range (type of sensor)	Measuring range module settings
V: Voltage	± 80 mV ± 250 mV ± 500 mV ± 1000 mV	A
	± 2.5 V ± 5 V 1 V to 5 V ± 10 V	B
TC-I: Thermocouple (internal comparison) (thermal voltage measurement)	Type N [NiCrSi-NiSi] Type E [NiCr-CuNi] Type J [Fe-CuNi] Type K [NiCr-Ni] Type L [Fe-CuNi]	A
TC-E: Thermocouples (external comparison) (thermal voltage measurement)		
2DMU: Current (2-wire transducer)	4 mA to 20 mA	D
4DMU: Current (4-wire transducer)	± 3.2 mA ± 10 mA 0 mA to 20 mA 4 mA to 20 mA ± 20 mA	C
R-4L: Resistance (4-wire connection)	150 Ω 300 Ω 600 Ω	A

Selected type of measurement	Measuring range (type of sensor)	Measuring range module settings
TC-IL: Thermocouples (linear, internal comparison) (temperature measurement)	Type N [NiCrSi-NiSi] Type E [NiCr-CuNi] Type J [Fe-CuNi] Type K [NiCr-Ni] Type L [Fe-CuNi]	A
TC-EL: Thermocouples (linear, external comparison) (temperature measurement)	Type N [NiCrSi-NiSi] Type E [NiCr-CuNi] Type J [Fe-CuNi] Type K [NiCr-Ni] Type L [Fe-CuNi]	A
RTD-4L: Thermal resistance (linear, 4-wire connection) (temperature measurement)	Pt 100 Klima Ni 100 Klima Pt 100 Standard Ni 100 Standard	A

Channel groups

The two channels of SM 331; AI 2 x 12 Bit form a channel group. You can assign parameters only to one channel group.

SM 331; AI 2 x 12 Bit is equipped with a measuring range module for channel group 0.

Line continuity check

The line continuity check is designed only for temperature measurements (thermocouples and thermoresistors.)

Special features of the line continuity check for the 4 mA to 20 mA measuring range

If you configured a measuring range of 4 mA to 20 mA, and **enabled the line continuity check**, the analog input module logs a wire-break event to diagnostics data when the current drops below 3.6 mA.

The module also triggers a diagnostics interrupt if this function is enabled in the program.

A wire break can only be signaled by means of the lit SF LED and the diagnostic bytes must be evaluated in the user program if diagnostics interrupts are disabled.

If you configured a measuring range of 4 mA to 20 mA, **disabled** the line continuity check, and enabled diagnostic interrupts, the module triggers a diagnostic interrupt when the underflow value is reached.

6.8.3 Programmable parameters

Introduction

For general information on programming analog modules, refer to the chapter Programming analog modules (Page 307).

Parameters

Table 6- 22 Overview of the parameters of SM 331; AI 2 x 12 Bit

Parameters	Range of values	Default	Parameter type	Scope
Enable • Diagnostics interrupt • Process interrupt when limit exceeded	yes/no yes/no	no no	dynamic	Module
Process interrupt trigger • High limit • Low limit	32511 to -32512 from - 32512 to 32511	-	dynamic	Channel
Diagnostics • Group diagnostics • with line continuity check	yes/no yes/no	no no	static	Channel group
Measurement • Measurement type	disabled Voltage V 4DMU current (4-wire transducer) 2DMU current (2-wire transducer) R-4L resistance (4-wire connection) RTD-4L thermoresistor (linear, 4-wire connection) TC-I thermocouple (internal comparison) TC-E thermocouple (external comparison) TC-IL thermocouple (internal comparison) TC-EL thermocouple (linear, external comparison)	V	dynamic	Channel or channel group
• Measuring range	Refer to the chapter Measuring methods and ranges (Page 396) for the adjustable measuring ranges of the input channels	± 10 V		
• Noise suppression	400 Hz; 60 Hz; 50 Hz; 10 Hz	50 Hz		

See also

Diagnostics messages of analog input modules (Page 309)

6.8.4 Additional information on SM 331; AI 2 x 12 Bit

Unused channels

Short-circuit unused channels and connect these with M_{ANA}. This optimizes interference immunity of the analog input module. Set the "disabled" value at the "measurement type" parameter for unused channels. This setting reduces module cycle times.

Also short-circuit the COMP input if this is not used.

As certain programmed inputs may remain unused due to the channel group configuration, make allowances for the special features of these inputs outlined below in order to be able to use the diagnostics functions at these used channels:

- **Measuring range 1 V to 5 V:** wire the used input and unused input of the same channel group in parallel.
- **Current measurement, 2-wire transducer:** There are two options of setting up the channel circuit:

  a) Open unused input; channel group diagnostics disabled. The analog module would trigger a single diagnostics interrupt and set its SF LED if diagnostics is enabled.

  b) Terminating the unused input using a 1.5 kΩ to 3.3 kΩ resistor. This allows you to enable diagnostics for this channel group.
- **Current measurement 4 mA to 20 mA, 4-wire transducer:** wire the used input and unused input of the same channel group in series.

Line continuity check

The line continuity check is designed only for temperature measurements (thermocouples and thermoresistors.)

Special features of the line continuity check for the 4 mA to 20 mA measuring range

If you configured a measuring range of 4 mA to 20 mA, and **enabled the line continuity check**, the analog input module logs a wire-break event to diagnostics data when the current drops below 3.6 mA.

The module also triggers a diagnostics interrupt if this function is enabled in the program.

A wire break can only be signaled by means of the lit SF LED and the diagnostic bytes must be evaluated in the user program if diagnostics interrupts are disabled.

If you configured a measuring range of 4 mA to 20 mA, **disabled the line continuity check** and enabled diagnostic interrupts, the module triggers a diagnostic interrupt when the underflow value is reached.

6.9 Analog input module SM 331; AI 8 x RTD; (6ES7331-7PF01-0AB0)

Order number

6ES7331-7PF01-0AB0

Properties

- 8 inputs in 4 channel groups
- Programmable measurement type at each channel group
  - Resistance
  - Temperature
- Programmable resolution at each channel group (15 bits + sign)
- Any measuring range per channel group
- Programmable diagnostics and diagnostic interrupt
- Programmable limit value monitoring for 8 channels
- Programmable hardware interrupt when limit is exceeded
- High-speed update of measured values at up to 4 channels
- Programmable hardware interrupt at end of cycle
- Electrical isolation to the CPU
- Supports parameter reassignment in RUN

Resolution

The resolution of measured values is independent of the selected integration time.

Diagnostics

For information on diagnostics messages at the "group diagnostics" parameter, refer to chapter Diagnostic messages of analog input modules (Page 309).

Hardware interrupts

Hardware interrupts for channel groups 0 and 1 can be programmed in STEP 7. However, set a hardware interrupt only for the first channel of a channel group, that is, either at channel 0, or at channel 2

Terminal assignment

The diagrams below show the various wiring options. These examples apply to all channels (channel 0 to 7).

⚠ CAUTION
Any faulty wiring of the 3-wire connections may cause unexpected module states and hazardous plant states.

Wiring: 2, 3 and 4-wire connection for resistance and thermoresistor measurement

Connection possible at both sides at channels 0 to 7

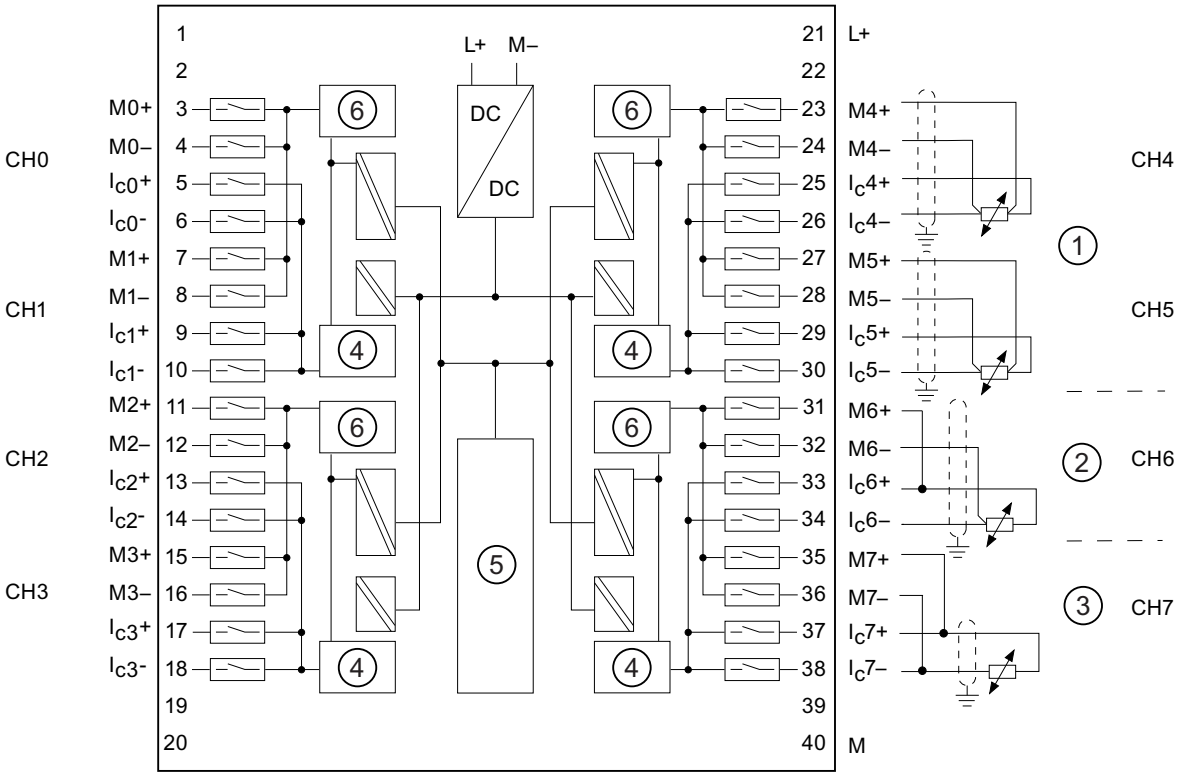

① 4-wire connection
② 3-wire connection
③ 2-wire connection
④ Digital-to-Analog Converter
⑤ Backplane bus interface
⑥ Analog-to-Digital Converter (ADC)

Figure 6-21 Wiring and block diagrams

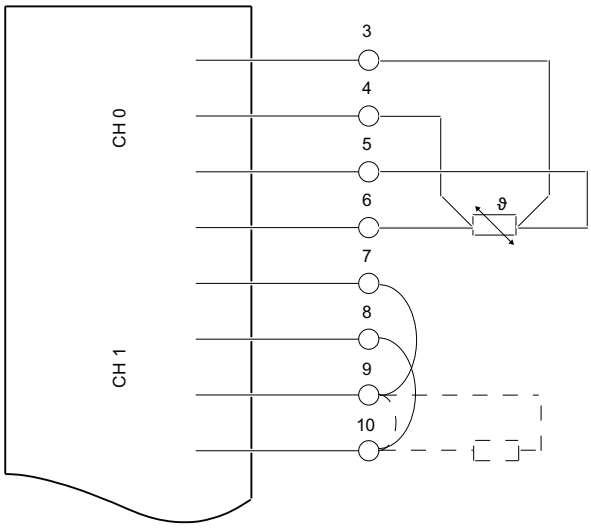

Figure 6-22 Unused channel

Note

- Always use channel n (in this case, channel 0) for measuring.

- Short-circuit unused channels (in this case, channel 1) **or** connect them to a resistor in the rated range (e.g. 100 ohms for Pt 100) to prevent diagnostics functions.

CAUTION

Any faulty wiring of the 3-wire connections may cause unexpected module states and hazardous plant states.

Wiring: 3-wire connection

For 3-wire connections to SM 331; AI 8 x RTD, **bridge M_+ and I_{C+}**.

Always wire the I_{C-} **and M_-** cables directly to the resistance thermometer.

Wiring: 2-wire connection

For 2-wire connections to SM 331; AI 8 x RTD, **bridge M_+ and I_{C+}** as well as M_- and I_{C-}.

On the 2-conductor connection, there is no compensation for line impedance. The line impedance is included in the measurement!

Technical specifications

Technical specifications	
Dimensions and weight	
Dimensions W x H x D (mm)	40 x 125 x 117
Weight	ca. 272 g
Module-specific data	
Supports parameter reassignment in RUN	Yes
Response of non-programmed inputs	Return the process value which was valid before configuration
Supports isochronous mode	no
Number of inputs	8
Cable length • shielded	 max. 200 m
Voltages, currents, electrical potentials	
Rated electronics supply voltage L + • Reverse polarity protection	24 VDC yes
Constant measuring current for resistive transducers	typ. 5 mA (pulsed)
Electrical isolation • between channels and the backplane bus • between channels and electronics power supply • between channels in groups of	 yes yes yes 2
Maximum potential difference • between channels (U_{CM}) • Between the channels and $M_{internal}$ (V_{iso})	 60 VAC / 75 VDC 60 VAC / 75 VDC
Isolation test voltage	500 VDC
Current consumption • from the backplane bus • from supply voltage L+	 max. 100 mA max. 240 mA
Power loss of the module	typ. 4.6 W
Generation of analog values	
Measuring principle	Integrating
Operating mode	**8-channel mode (hardware filter)**
Integration/conversion time/resolution (per channel) • programmable • Basic conversion time in ms • Additional conversion time for resistance measurement in ms • Additional conversion time for wire-break monitoring in ms • Resolution (including overshoot range) • Interference frequency suppression at interference frequency f1 in Hz	 yes 80 100* 0 16 bits (including sign) 400 / 60 / 50

Technical specifications	
Measured value smoothing	None / low/ average/ high
Conversion time (per channel)	100 ms
Basic execution time of the module (all channels enabled)	200 ms
Operating mode	**8-channel mode (software filter)**
Integration/conversion time/resolution (per channel) • programmable • Basic conversion time in ms • Additional conversion time for resistance measurement in ms • Additional conversion time for wire-break monitoring in ms • Resolution (including overshoot range) • Interference frequency suppression at interference frequency f1 in Hz	 yes 8 / 25 / 30 25/ 43/ 48* 0 16 bits (including sign) 400 / 60 / 50
Measured value smoothing	None/low/average/high
Conversion time (per channel)	25 ms/ 43 ms/ 48 ms
Basic execution time of the module (all channels enabled)	50 ms/ 86 ms/ 96 ms
Operating mode	**4-channel mode (hardware filter)**
Integration/conversion time/resolution (per channel) • programmable • Basic conversion time in ms • Additional conversion time for resistance measurement in ms • Additional conversion time for wire-break monitoring in ms • Resolution (including overshoot range) • Interference frequency suppression at interference frequency f1 in Hz	 yes 3,3**** 100* 100** 16 bits (including sign) 400 / 60 / 50
Measured value smoothing	None/low/average/high
Basic execution time of the module (all channels enabled)	10 ms
Interference frequency suppression, error limits	
Interference frequency suppression at f = n (f1 ± 1%), (f1 = interference frequency) n=1.2, ...	
• Common mode interference (V_{CM} < 60 VAC) • Seriesmode interference (peak value < rated input range)	> 100 dB > 90 dB
Crosstalk between inputs	> 100 dB
Operational limit (across entire temperature range, relative to measurement range end value in the selected input range)	
• Resistance thermometers – Pt 50, Pt 100, Pt 200, Pt 500, Pt 1000, Ni 100, Ni 120, Ni 200, Ni 500, Ni 1000, LG-Ni 1000, Cu 50, Cu 100, – Pt 10, Cu 10 • Resistance	 ± 1.0 °C ± 2.0 °C ± 0,1 %

Technical specifications	
Basic error limit (operational limit at 25 °C, relative to the measurement range end value in the selected input range)	
• Resistance thermometers – Pt 50, Pt 100, Pt 200, Pt 500, Pt 1000, Ni 100, Ni 120, Ni 200, Ni 500, Ni 1000, LG-Ni 1000, Cu 50, Cu 100, – Pt 10, Cu 10 • Resistance	± 0.5 °C ± 1.0 °C ± 0,05 %
Temperature error (relative to input range) • Resistance thermometers • Resistance	± 0.015 °C/K ± 0.005 %/K
Linearity error (relative to input range) • Resistance thermometers • Resistance	± 0.2 °C ± 0,02 %
Repeat accuracy (in transient state at 25 °C, relative to input range) • Resistance thermometer • Resistance	± 0.2 °C ± 0,01 %
Status, interrupts, diagnostics	
Interrupts • Hardware interrupt • Diagnostic interrupt	Programmable (channels 0-7) programmable
Diagnostic function • Group error display • Reading diagnostics information	programmable red LED (SF) supported
Sensor selection data	
Input range (rated values) input resistance • Resistance thermometer • Resistance	Pt 10, Pt 50, Pt 100, Pt 200, Pt 500, Pt 1000, Ni 100, Ni 120, Ni 200, Ni 500, Ni 1000, LG-Ni 1000, Cu 10, Cu 50, Cu 100 (Standard and Klima range) 150 Ω, 300 Ω, 600 Ω
Maximum voltage at voltage input (destruction limit)	35 V DC continuous; 75 V DC for max. duration of 1 s (duty factor 1: 20)
Wiring of the signal sensors • for resistance measurement with 2-wire connection with 3-wire connection with 4-wire connection	using a 40-pin front connector supported supported*** supported

Technical specifications	
Characteristics linearization	
• Resistance thermometer	Pt 10, Pt 50, Pt 100, Pt 200, Pt 500, Pt 1000, Ni 100, Ni 120, Ni 200, Ni 500, Ni 1000, LG-Ni 1000, Cu 10, Cu 50, Cu 100 (standard and Klima range)
• Technical unit of temperature measurement	Degrees Centigrade; degrees Fahrenheit
* With 3-wire connections, resistance measurements to compensate for line impedance at intervals of five minutes. ** Wire-break monitoring in 4-channel mode (hardware filter) at intervals of three seconds. *** The maximum line impedance for 3-wire transducer measurements for the RTD elements PT 10 and Cu 10 is 10 Ω. Maximum line impedance for all other RTD elements during 3-wire transducer measurements: 20 Ω. **** In 4-channel mode, the converted value settles to 100 % within 80 ms. The value determined in this process is set at intervals of 3.3 ms (max. 10 ms).	

Parameter reassignment in RUN

If you reassign parameters in RUN, the following special characteristic applies.

SF LED is lit:

If a diagnostics was pending prior to reconfiguration, the SF LEDs (on CPU, IM or module) may be lit even though diagnostics is no longer pending and the module is operating correctly.

Solution:

- Only assign new parameters if no diagnostics is pending, or
- unplug module and plug it in again.

6.9.1 Measurement types and measuring ranges

Introduction

The measurement type and range is configured at the "measurement type" parameter in *STEP 7*.

Table 6- 23 Measurement types and ranges

Selected type of measurement	Measuring range
Resistance: (3-/4-wire connection)	150 Ω 300 Ω 600 Ω

Selected type of measurement	Measuring range
RTD resistance and linearization: (3-/4-wire connection)	Pt 100 Klima Pt 200 Klima Pt 500 Klima Pt 1000 Klima Ni 100 Klima Ni 120 Klima Ni 200 Klima Ni 500 Klima Ni 1000 Klima* LG-Ni 1000 Klima Cu 10 Klima Pt 100 Standard Pt 200 Standard Pt 500 Standard Pt 1000 Standard Ni 100 Standard Ni 120 Standard Ni 200 Standard Ni 500 Standard Ni 1000 Standard* LG-Ni 1000 Standard Cu 10 Standard Pt 10 GOST Klima Pt 10 GOST Standard Pt 50 GOST Klima Pt 50 GOST Standard Pt 100 GOST Klima Pt 100 GOST Standard Pt 500 GOST Klima Pt 500 GOST Standard Cu 10 GOST Klima Cu 10 GOST Standard Cu 50 GOST Klima Cu 50 GOST Standard Cu 100 GOST Klima Cu 100 GOST Standard Ni 100 GOST Klima Ni 100 GOST Standard

* ≙ LG-Ni 1000 with temperature coefficient 0.00618 or 0.00672

Channel groups

The channels of SM 331; AI 8 x RTD are arranged in four groups of two channels. You can assign parameters only to one channel group.

The table below shows the relevant configuration of channel groups. The channel group number is required to program SFC parameters in the user program.

Table 6- 24 Assignment of SM 331; AI 8 x RTD channels to channel groups

Channels ...	... form one channel group each
Channel 0	Channel group 0
Channel 1	
Channel 2	Channel group 1
Channel 3	
Channel 4	Channel group 2
Channel 5	
Channel 6	Channel group 3
Channel 7	

6.9.2 Programmable parameters

Introduction

For general information on programming analog modules, refer to the chapter Programming analog modules (Page 307).

The table below provides an overview of programmable parameters and of their defaults:

Parameters

Table 6- 25 Overview of SM 331; AI 8 x RTD parameters

Parameters	Range of values	Default	Parameter type	Scope
Enable • Diagnostics interrupt • Process interrupt when limit exceeded • Process interrupt at end of cycle	 yes/no yes/no yes/no	 no no no	dynamic	Module
Process interrupt trigger • High limit • Low limit	32511 to -32512 from - 32512 to 32511	32767 -32768	dynamic	Channel
Diagnostics • Group diagnostics • with line continuity check	 yes/no yes/no	 no no	static	Channel group
Measurement • Measurement type	 disabled R-4L resistance (4-wire connection) R-3L resistance (3-wire connection) RTD-4L thermoresistor (linear, 4-wire connection) RTD-3L thermoresistor (linear, 3-wire connection)	 RTD-4L	dynamic	Channel group
• Measuring range	See chapter Measurement types and measuring ranges (Page 407)	Pt 100 Klima 0.003850 (IPTS-68)		
• Temperature unit	Degrees Centigrade; degrees Fahrenheit	degrees Centigrade	dynamic	Module
• Mode of operation	8-channel mode (hardware filter) 8-channel mode (software filter) 4-channel mode (hardware filter)	8-channel mode, hardware filter	dynamic	Module

Parameters	Range of values	Default	Parameter type	Scope
• Temperature coefficient for temperature measurement with thermoresistor (RTD)	Platinum (Pt) 0.003850 Ω/Ω/ °C (IPTS-68) 0.003916 Ω/Ω/ °C 0.003902 Ω/Ω/ °C 0.003920 Ω/Ω/ °C 0.003850 Ω/Ω/ °C (ITS-90) 0.003910 Ω/Ω/ °C Nickel (Ni) 0.006170 Ω/Ω/ °C 0.006180 Ω/Ω/ °C 0.006720 Ω/Ω/ °C 0.005000 Ω/Ω/ °C (LG Ni 1000) Copper (Cu) 0.004260 Ω/Ω/ °C 0.004270 Ω/Ω/ °C 0.004280 Ω/Ω/ °C	0,003850	dynamic	Channel group
• Noise suppression*	50/60/400 Hz; 400 Hz; 60 Hz; 50 Hz	50/60/400 Hz	dynamic	Channel group
• Smoothing	none weak medium strong	none	dynamic	Channel group
* 50/60/400 Hz only programmable for 8-channel mode (hardware filter) and 4-channel mode (hardware filter); 50 Hz, 60 Hz or 400 Hz only programmable for 8-channel mode (software filter)				

See also

Diagnostics messages of analog input modules (Page 309)

6.9.3 Additional information on SM 331; AI 8 x RTD

Modes of operation

Operating modes of SM 331; AI 8 x RTD:

- 8-channel mode (hardware filter)
- 8-channel mode (software filter)
- 4-channel mode (hardware filter)

The operating mode influences the module cycle time.

8-channel mode (hardware filter)

In this mode, the module changes between the two channels of each group. The four ADCs of the module simultaneously convert channels 0, 2, 4 and 6. The ADCs first convert the channels with even numbers, and then the channels with the odd numbers 1, 3, 5 and 7 (see the figure below.)

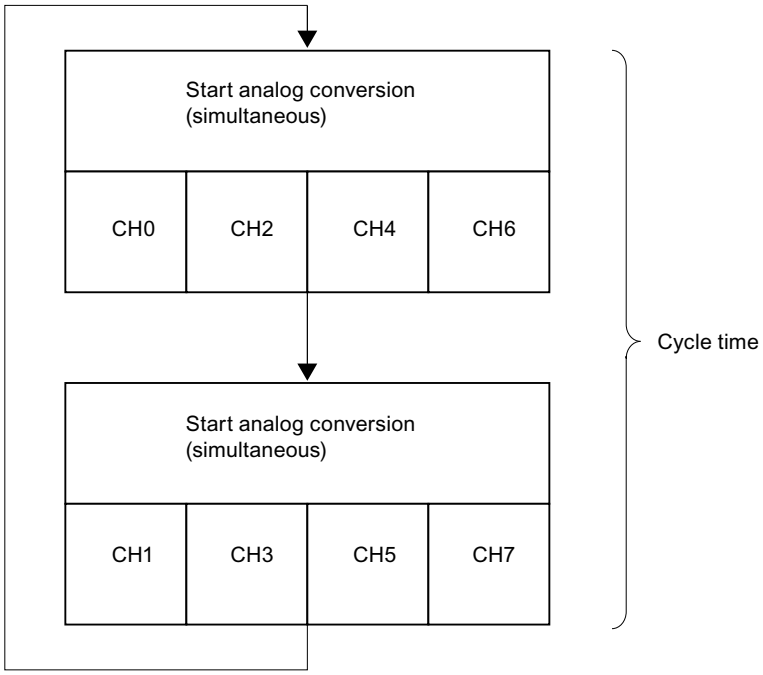

Figure 6-23 8-channel mode cycle time (hardware filter)

Cycle time of module in 8-channel mode

The channel conversion time, including module communication time, is 84 ms. The module must change to the second channel of the group using OptoMOS relays when conversion is completed. Opto-MOS relays require 12 ms for switching and settling. Each channel requires a time of 97 ms, i.e. the total cycle time equals 194 ms.

Cycle time = (t_K + t_U) x 2

Cycle time = (84 ms + 16 ms) x 2

Cycle time = 200 ms

t_C: Conversion time for one channel
t_C: Channel changeover time within the channel group

8-channel mode (software filter)

Analog-to-digital conversion in this mode is identical to the conversion in 8-channel mode (hardware filter). The four ADCs of the module simultaneously convert channels 0, 2, 4 and 6. The ADCs first convert the channels with even numbers, and then the channels with the odd numbers 1, 3, 5 and 7 (see the figure below.)

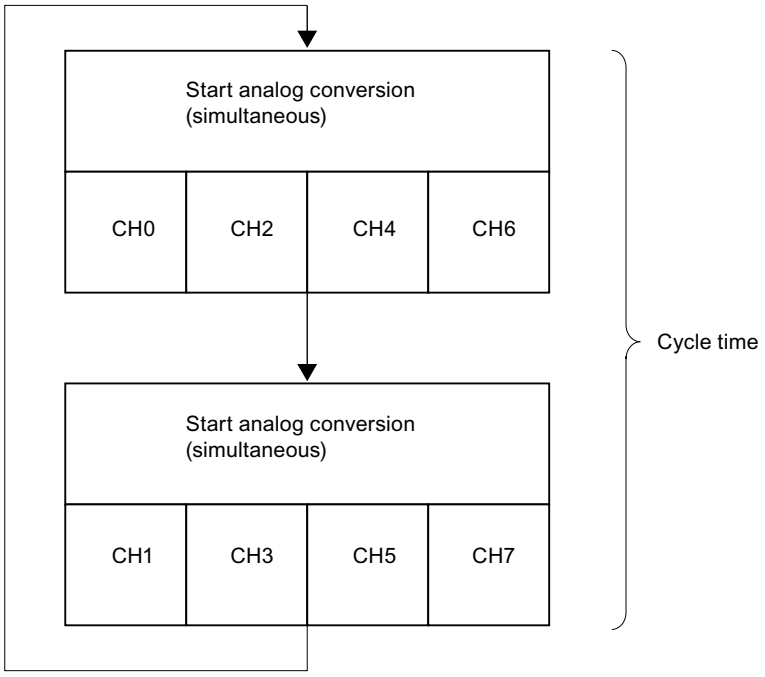

Figure 6-24 8-channel mode cycle time (software filter)

Cycle time of module in 8-channel mode (software filter)

The channel conversion time is based on the programmed interference frequency. The channel conversion time is 32 ms, including communication time, when you set an interference frequency of 50 Hz. The channel conversion time is 27 ms when you set an interference frequency of 60 Hz. You can reduce channel conversion times to 9 ms by setting an interference frequency of 400 Hz. As in "hardware filter, 8channel" mode, the module has to toggle to the second channel of the group within a changeover time of 16 ms using the Opto-MOS relays. The table below shows this correlation.

Table 6- 26 Cycle times in "8-channel mode (software filter)"

Interference frequency	Channel cycle time*	Module cycle time (all channels)
50 Hz	48 ms	**96 ms**
60 Hz	43 ms	**86 ms**
400 Hz	25 ms	**50 ms**
* Channel cycle time = channel conversion time + 12 ms channel changeover time within the group		

4-channel mode (hardware filter)

In this mode, the module does not change between the channels of the groups. The four ADCs of the module simultaneously convert the channels 0, 2, 4 and 6.

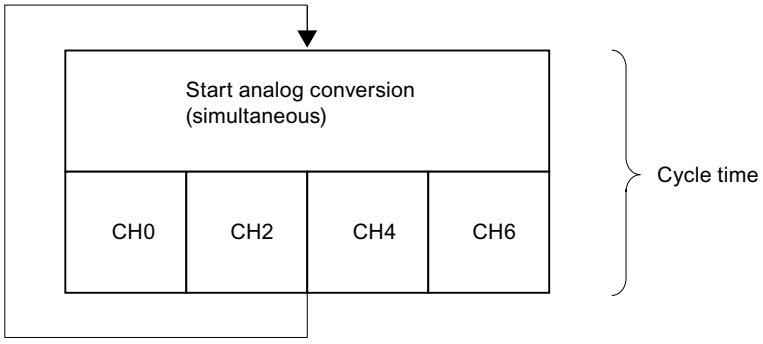

Figure 6-25 4-channel mode cycle time (hardware filter)

Cycle time of the module in 4-channel mode (hardware filter)

The converted value settles to 100% within 80 ms and is updated at intervals of 10 ms when 4-channel mode is set. The channel and module cycle times are always identical, as the module does not change between the channels of a group: 10 ms.

Channel conversion time = channel cycle time = module cycle time = **10 ms**

Cycle time extension due to wire-break monitoring

The wire-break monitoring software function of the module is available in all operating modes.

The cycle time of the module is doubled **in 8-channel mode (hardware or software filter)**, irrespective of the number of channels at which wire-break monitoring is enabled.

In 4-channel mode (hardware filter), the module interrupts processing of input data for the duration of 100 ms and performs a line continuity check. That is, each line continuity check extends the module cycle time by 100 ms.

Unused channels

In order to avoid incorrect measurements, an unused channel from an active group of channels must be configured. Connect a resistor of the nominal range to the unused channel in order to suppress diagnostics errors.

Set the "disabled" value at the "measurement type" parameter for unused channels. This setting reduces module cycle times.

Short-circuit to M or L

The module does not suffer any damage if you short-circuit an input channel to M or L.. The channel continues to output valid data and does not report a diagnostics event.

End of cycle interrupt

You can synchronize a process with the conversion cycle of the module by enabling the end of cycle interrupt. The interrupt is set when all active channels have been converted.

The table below shows the contents of the 4 bytes of additional OB40 information during process or end of cycle interrupts.

Content of the 4 bytes with additional information		2^7	2^6	2^5	2^4	2^3	2^2	2^1	2^0	Byte
Special analog flags	2 bits per channel to identify the range									
	High limit exceeded at channel	7	6	5	4	3	2	1	0	0
	Low limit exceeded at channel	7	6	5	4	3	2	1	0	1
	End of cycle event						X			2
	Free bit									3

Programming restrictions when operating SM 331; AI 8 x RTD with PROFIBUS masters which only support DPV0.

Certain parameters are not allowed when operating the SM 331; AI 8 x RTD analog input module on an ET 200M PROFIBUS slave system and the PROFIBUS master is not an S7 master.. Non-S7 masters do not support process interrupts. All parameters associated with these functions are disabled for this reason. This includes process interrupt enable, hardware restrictions and end the enabling of cycle interrupts. All other parameters are allowed.

Operating the module on the ET 200M Distributed IO device

Operation of SM 331; AI 8 x RTD on ET 200M requires one of the following IM 153 x:

- IM 153-1; as of 6ES7153-1AA03-0XB0, V 01
- IM 153-2; as of 6ES7153-2AA02-0XB0, V 05
- IM 153-2; as of 6ES7153-2BA00-0XA0; V 01
- IM 153-2; as of 6ES7153-2AA01-0XB0, V 04

6.10 Analog input module SM 331; AI 8 x TC; (6ES7331-7PF11-0AB0)

Order number

6ES7331-7PF11-0AB0

Properties

- 8 inputs in 4 channel groups
- Programmable measurement type at each channel group
  - Temperature
- Programmable resolution at each channel group (15 bits + sign)
- Any measuring range selection per channel group
- Programmable diagnostics and diagnostic interrupt
- Programmable limit value monitoring for 8 channels
- Programmable hardware interrupt when limit is exceeded
- High-speed update of measured values at up to 4 channels
- Programmable hardware interrupt at end of cycle
- Electrically isolated from the CPU
- Supports parameter reassignment in RUN

Resolution

The resolution of measured values is independent of the selected integration time.

Diagnostics

For information on diagnostics messages at the "group diagnostics" parameter, refer to chapter Diagnostic messages of analog input modules (Page 309).

Hardware interrupts

Hardware interrupts for channel groups 0 and 1 can be programmed in *STEP 7*. However, set a hardware interrupt only for the first channel of a channel group, that is, either at channel 0, or at channel 2

Terminal assignment

The diagrams below show various wiring options. These examples apply to all channels (channel 0 to 7).

Wiring: Thermocouple via reference junction

All 8 inputs are available as measurement channels if thermocouples are wired via reference junctions which are regulated to 0 °C or 50 °C.

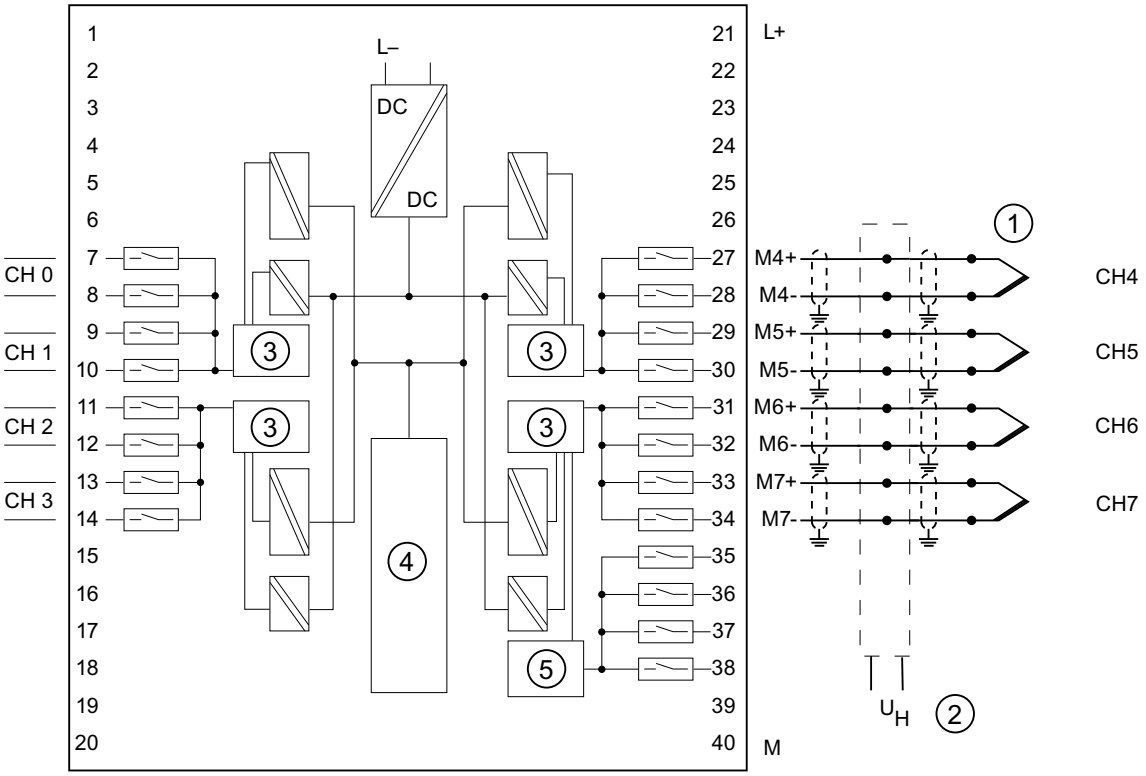

① Thermocouple via reference junction
② Reference junction regulated to 0 °C or 50 °C
for example, compensation box (per channel) or thermostat
③ Analog-to-Digital Converter (ADC)
④ Backplane bus interface
⑤ External cold spot comparison

Figure 6-26 Wiring and block diagrams

Wiring: Thermocouple with external compensation

With this type of compensation, the temperature of the terminals at the reference junction is established using a resistance thermometer Pt100 with a temperature range of -25 °C to 85 °C (see terminals 35 to 38).

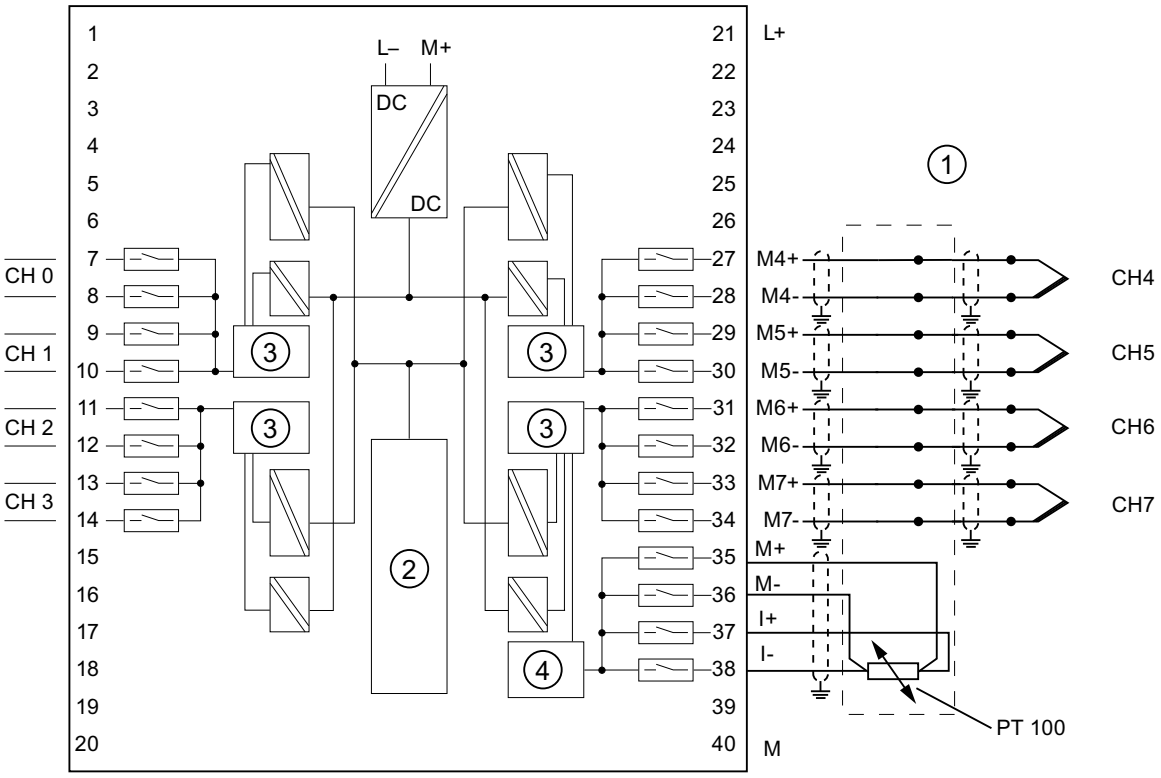

① Thermocouple with external temperature compensation
② Backplane bus interface
③ Analog-to-Digital Converter (ADC)
④ External cold spot comparison

Figure 6-27 Wiring and block diagrams

Wiring: Thermocouple with internal compensation

With this kind of compensation, the module registers the temperature at the reference junction in the connector.

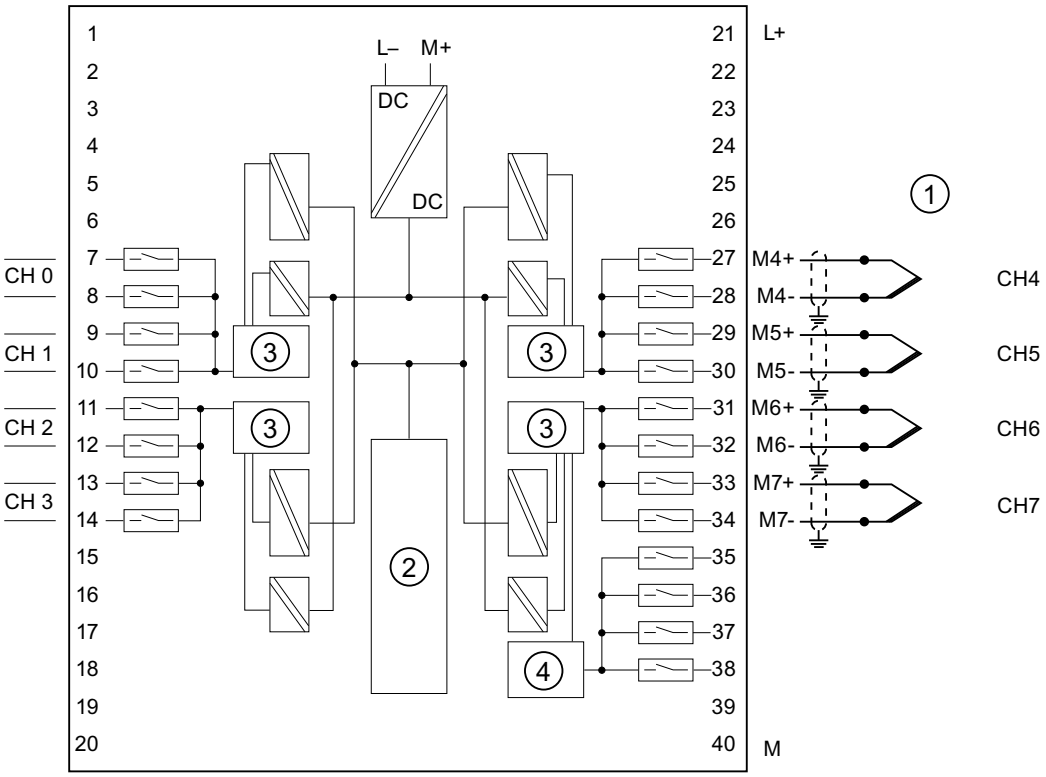

① Thermocouple with equalizing conductor up to front connector
② Backplane bus interface
③ Analog-to-Digital Converter (ADC)
④ External cold spot comparison

Figure 6-28 Wiring and block diagrams

Technical specifications

Technical specifications	
Dimensions and weight	
Dimensions W x H x D (mm)	40 x 125 x117
Weight	approx. 272 g
Module-specific data	
Supports parameter reassignment in RUN	Yes
Response of non-programmed inputs	Return the process value which was valid before configuration
Supports isochronous mode	No
Cable length • shielded	 max. 100 m
Voltages, currents, electrical potentials	
Rated electronics supply voltage L + • Reverse polarity protection	24 VDC Yes
Constant measuring current for resistance-type transmitters	typ. 0.7 mA
Electrical isolation • between channels and the backplane bus • between channels and electronics power supply • between channels in groups of	 Yes Yes Yes 2
Maximum potential difference • between channels (U_{CM}) • Between the channels and $M_{internal}$ (V_{iso})	 60 VAC / 75 VDC 60 VAC / 75 VDC
Isolation test voltage	500 VDC
Current consumption • from the backplane bus • from supply voltage L+	 max. 100 mA max. 240 mA
Power loss of the module	typ. 3.0 W
Generation of analog values	
Measuring principle	Integrating
Operating mode	**8-channel mode (hardware filter)**
Integration/conversion time/resolution (per channel) • programmable • Basic conversion time in ms • additional conversion time for wire-break monitoring in ms • Resolution (including overshoot range) • Interference frequency suppression at interference frequency f1 in Hz	 Yes 95 4 16 bits (including sign) 400/60/50
Measured value smoothing	none/weak/medium/strong

Technical specifications			
Basic execution time of the module (all channels enabled)		196 ms ******	
Operating mode		**8-channel mode (software filter)**	
Integration/conversion time/resolution (per channel) • programmable • Basic conversion time in ms • additional conversion time for wire-break monitoring in ms • Resolution (including overshoot range) • Interference frequency suppression at interference frequency f1 in Hz		 Yes 23/72/83 4 16 bits (including sign) 400/60/50	
Measured value smoothing		none/weak/medium/strong	
Basic execution time of the module (all channels enabled)		46/144/166 ms ******	
Measuring principle		Integrating	
Operating mode		**4-channel mode (hardware filter)**	
Integration/conversion time/resolution (per channel)			
• programmable • Basic conversion time in ms		Yes 3.3 ms *****	
• additional conversion time for wire-break monitoring in ms		93 *	
• Resolution (including overshoot range) • Interference frequency suppression at interference frequency f1 in Hz		16 bits (including sign) 400/60/50	
Measured value smoothing		none/weak/medium/strong	
Basic execution time of the module (all channels enabled)		10 ms ******	
Interference frequency suppression, error limits			
Interference frequency suppression at f = n (f1 1%), (f1 = interference frequency) n = 1.2, etc.			
• Common mode interference (V_{CM} < 60 V AC) • Series-mode interference (peak interference value < rated input range)		> 100 dB > 90 dB **	
Crosstalk between inputs		> 100 dB	
Operational limit (across temperature range, relative to the measurement range end value of the input range) (0 to 60 °C) Note: This limit does not cover the temperature-error comparison points.			
• Thermocouple			
Type T	-200 °C to	+400 °C	± 0.7 °C
	-230 °C to	-200 °C	± 1.5 °C
Type U	-150 °C to	+600 °C	± 0.9 °C
	-200 °C to	-150 °C	± 1.2 °C
Type E	-200 °C to	+1000 °C	± 1.2 °C
	-230 °C to	-200 °C	± 1.5 °C
Type J	-150 °C to	+1200 °C	± 1.4 °C
	-210 °C to	-150 °C	± 1.7 °C
Type L	-150 °C to	+900 °C	± 1.5 °C
	-200 °C to	-150 °C	± 1.8 °C

Technical specifications			
Type K	-150 °C to	+1372 °C	± 2.1 °C
	-220 °C to	-150 °C	± 2.9 °C
Type N	-150 °C to	+1300 °C	± 2.2 °C
	-220 °C to	-150 °C	± 3.0 °C
Type R	+100 °C to	+1769 °C	± 1.5 °C
	-50 °C to	+100 °C	± 1.8 °C
Type S	+100 °C to	+1769 °C	± 1.7 °C
	-50 °C to	+100 °C	± 2.0 °C
Type B ****	+800 °C to	+1820 °C	± 2.3 °C
	+200 °C	+800 °C	± 2.5 °C
Type C	+100 °C to	+2315 °C	± 2.3 °C
	0 °C	+100 °C	± 2.5 °C
Txk/xk(L)	-200 ° C	-150 ° C	± 1.5 °C
Basic error limit (operational limit at 25 °C, relative to the measurement range end value in the selected input range)			
• Thermocouple			
Type T	-200 °C to	+400 °C	± 0.5 °C
	-230 °C to	-200 °C	± 1.0 °C
Type U	-150 °C to	+600 °C	± 0.5 °C
	-200 °C to	-150 °C	± 1.0 °C
Type E	-200 °C to	+1000 °C	± 0.5 °C
	-230 °C to	-200 °C	± 1.0 °C
Type J	-150 °C to	+1200 °C	± 0.5 °C
	-210 °C to	-150 °C	± 1.0 °C
Type L	-150 °C to	+900 °C	± 0.5 °C
	-200 °C to	-150 °C	± 1.0 °C
Type K	-150 °C to	+1372 °C	± 0.5 °C
	-220 °C to	-150 °C	± 1.0 °C
Type N	-150 °C to	+1300 °C	± 0.5 °C
	-200 °C to	-150 °C	± 1.0 °C
Type R	+100 °C to	+1769 °C	± 0.5 °C
	-50 °C to	+100 °C	± 0.5 °C
Type S	+100 °C to	+1769 °C	± 0.5 °C
	-50 °C to	+100 °C	± 1.0 °C
Type B ****	+800 °C to	+1820 °C	± 1.0 °C
	+200 °C to	+800 °C	± 2.0 °C
Type C	+100 °C to	+2315 °C	± 0.5 °C
	0 °C	+100 °C	± 1.0 °C
Txk/xk(L)	-200 ° C	-150 ° C	± 1.0 °C
Temperature error (relative to input range)		± 0.005%/K	
Linearity error (relative to input range)		±0.02%	
Repeat accuracy (in settled state at 25 °C, relative to input range)***		±0.01%	

Technical specifications	
Status, interrupts, diagnostics	
Interrupts • Hardware interrupt • Diagnostic interrupt	 programmable (channels 0 to 7) programmable
Diagnostic functions • Group error display • Reading diagnostics information	programmable red LED (SF) supported
Sensor selection data	
Input ranges (rated values) / input impedance • Thermocouples	 Types B, C, N, E, R, S, J, L, T, K, U, TxK/xK (L)/ > 10 megaohms
Maximum voltage at voltage input (destruction limit)	20 VDC continuous; 75 VDC for the duration of max. 1 s (duty factor 1:20)
Characteristics linearization	programmable
Temperature compensation • Internal temperature compensation • External temperature compensation with Pt 100 (0.003850) • Compensation for 0 °C reference junction temperature • Compensation for 50 °C reference junction temperature • Technical unit of temperature measurement	programmable supported supported supported supported Degrees Centigrade / degrees Fahrenheit
Wiring of the signal sensors	using a 40-pin front connector

** Wire-break monitoring in 4-channel mode (hardware filter) at intervals of three seconds.

** In 8-channel software mode (software filter), series-mode rejection is reduced as follows:

- 50 Hz > 70 dB
- 60 Hz > 70 dB
- 400 Hz > 80 dB

*** The operational limit comprises only the basic error of the analog input at Ta = 25 °C and the total temperature error. The total error must include the compensation error of the cold reference junction. Internal compensation of the reference junction = max. 1.5 °C
External compensation of the reference junction = precision of external RTD employed ± 0.1 °C.
External compensation of the reference junction which maintains the reference junction at 0 °C or 50 °C = precision of temperature control for the reference junction.

**** With thermocouple type B, a missing compensation of the reference junction temperature has no significant effect owing to its slight increase from approx. 0 °C to 40 °C. With missing compensation and set measuring type "Compensation to 0 °C", the deviation with thermocouple type B at measuring temperatures between:

- 700 °C and 1820 °C is < 0.5 °C
- 500 °C and 700 °C is < 0.7 °C.

If the reference junction temperature is approximately that of the module temperature, "internal compensation" should be set. As a result, the error for the temperature range from 500 °C to 1820 °C is reduced to < 0.5 °C.

***** In 4-channel mode, the converted value settles to 100 % within 80 ms. The value determined in this process is set at intervals of 3.3 ms (max. 10 ms).

****** If internal or external reference junction compensation is configured, the measured values of all channels are not updated for about 1 s in each minute. ###

Parameter reassignment in RUN

If you reassign parameters in RUN, the following special characteristic applies.

SF LED is lit:

If a diagnostics was pending prior to reconfiguration, the SF LEDs (on CPU, IM or module) may be lit even though diagnostics is no longer pending and the module is operating correctly.

Solution:

- Only assign new parameters if no diagnostics is pending, or
- unplug module and plug it in again.

6.10.1 Measurement types and measuring ranges

Introduction

The measurement type and range are configured at the "measuring range" parameter in *STEP 7*.

Table 6- 27 Measurement types and ranges

Selected type of measurement	Measuring range
TC-L00C: (thermocouple, linear, 0 °C reference temperature) TC-L50C: (thermocouple, linear, 50 °C reference temperature) TC-IL: (thermocouple, linear, internal comparator) TC-EL: (thermocouple, linear, external comparison)	Type B Type C Type E Type J Type K Type L Type N Type R Type S Type T Type U Type Txk / xk (L)

Channel groups

The channels of SM 331; AI 8 x TC are arranged in four groups of two channels. You can assign parameters only to one channel group.

The table below shows the relevant configuration of channel groups. The channel group number is required to program SFC parameters in the user program.

Table 6- 28 Assignment of SM 331; AI 8 x TC channels to channel groups

Channels ...	... form one channel group each
Channel 0	Channel group 0
Channel 1	
Channel 2	Channel group 1
Channel 3	
Channel 4	Channel group 2
Channel 5	
Channel 6	Channel group 3
Channel 7	

6.10.2 Adjustable parameters

Introduction

For general information on programming analog modules, refer to the chapter Programming analog modules (Page 307).

Parameters

Table 6- 29 Parameters of SM 331; AI 8 x TC

Parameters	Range of values	Default	Parameter type	Scope
Enable • Diagnostics interrupt • Process interrupt when limit exceeded • Process interrupt at end of cycle	 yes/no yes/no yes/no	 no no no	dynamic	Module
Process interrupt trigger • High limit • Low limit	32511 to -32512 from - 32512 to 32511	32767 -32768	dynamic	Channel
Diagnostics • Group diagnostics • with line continuity check	 yes/no yes/no	 no no	static	Channel group
Measurement • Measurement type	disabled TC-IL thermocouple (linear, internal comparison) TC-EL thermocouple (linear, external comparison) TC-L00C thermocouple (linear, ref. temp. 0 °C) TC-L50C thermocouple (linear, ref. temp. 50 °C)	TC-IL	dynamic	Channel group
• Measuring range	See table Measurement types and measuring ranges (Page 425)	Type K		
• Reaction to open thermocouple	Overflow; underflow	Overflow		
• Temperature unit	Degrees Centigrade; degrees Fahrenheit	degrees Centigrade	dynamic	Module
• Mode of operation	8-channel mode (hardware filter) 8-channel mode (software filter) 4-channel mode (hardware filter)	8 channels, hardware filter	dynamic	Module
• Noise suppression*	50/60/400 Hz; 400 Hz; 60 Hz; 50 Hz;	50/60/400 Hz	dynamic	Channel group

Parameters	Range of values	Default	Parameter type	Scope
• Smoothing	none weak medium strong	none	dynamic	Channel group
* 50/60/400 Hz only programmable for 8-channel mode (hardware filter) and 4-channel mode (hardware filter); 50 Hz, 60 Hz or 400 Hz only programmable for 8-channel mode (software filter)				

See also

Diagnostics messages of analog input modules (Page 309)

6.10.3 Additional information on SM 331; AI 8 x TC

Modes of operation

Operating modes of SM 331; AI 8 x TC:

- 8-channel mode (hardware filter)
- 8-channel mode (software filter)
- 4-channel mode (hardware filter)

The operating mode influences the module cycle time.

8-channel mode (hardware filter)

In this mode, the module changes between the two channels of each group. The four ADCs of the module simultaneously convert channels 0, 2, 4 and 6. The ADCs first convert the channels with even numbers, and then the channels with the odd numbers 1, 3, 5 and 7 (see the figure below.)

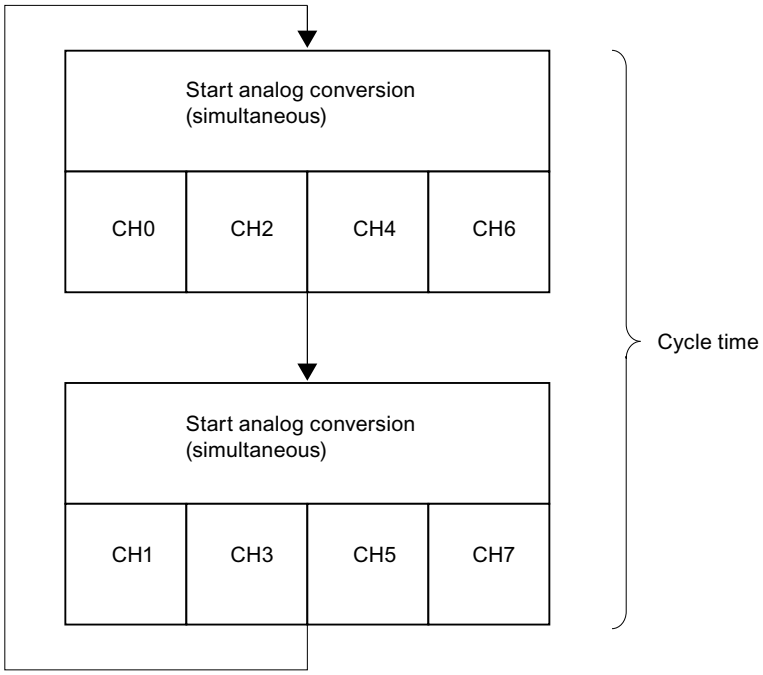

Figure 6-29 8-channel mode cycle time (hardware filter)

Cycle time of the module in 8-channel mode (hardware filter)

The channel conversion time, including module communication time, is 91 ms. The module must change to the second channel of the group using OptoMOS relays when conversion is completed. Opto-MOS relays require 7 ms for switching and settling. Each channel requires a time of 98 ms, i.e. the total cycle time equals 196 ms.

Cycle time = (t_K + t_U) x 2

Cycle time = (91 ms + 7 ms) x 2

Cycle time = **196 ms**

t_C: Conversion time for one channel
t_C: Time for changing over to the other channel in a channel group

8-channel mode (software filter)

Analog-to-digital conversion in this mode is similar to conversion in 8-channel mode (hardware filter). The four ADCs of the module simultaneously convert channels 0, 2, 4 and 6. The ADCs first convert the channels with even numbers, and then the channels with the odd numbers 1, 3, 5 and 7 (see the figure below.)

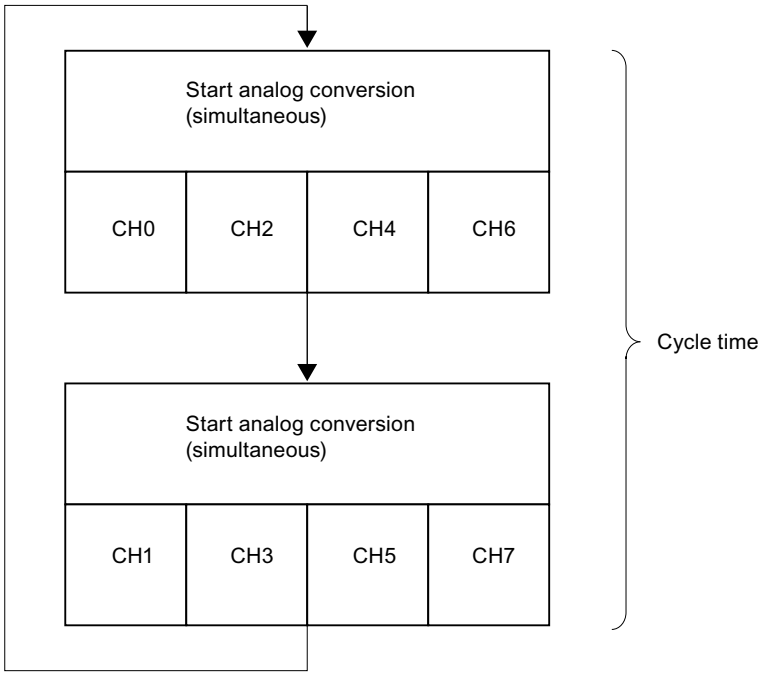

Figure 6-30 8-channel mode cycle time (software filter)

Cycle time of module in 8-channel mode (software filter)

However, the channel conversion time is oriented on the programmed noise suppression. The channel conversion time is 76 ms, including communication time, when you set an interference frequency of 50 Hz. The channel conversion time is 65 ms when you set an interference frequency of 60 Hz. You can reduce channel conversion times to 16 ms by setting an interference frequency of 400 Hz. As in "hardware filter, 8channel" mode, the module has to change to the second channel of the group within a changeover time of 7 ms using the Opto-MOS relays. The table below shows this correlation.

Table 6- 30 Cycle times in 8-channel mode (software filter)

Programmed noise suppression	Channel cycle time*	Module cycle time (all channels)
50 Hz	83 ms	**166 ms**
60 Hz	72 ms	**144 ms**
400 Hz	23 ms	**46 ms**
* Channel cycle time = channel conversion time +7 ms channel changeover time within the group		

4-channel mode (hardware filter)

In this mode, the module does not change between the channels of the groups. The four ADCs of the module simultaneously convert the channels 0, 2, 4 and 6.

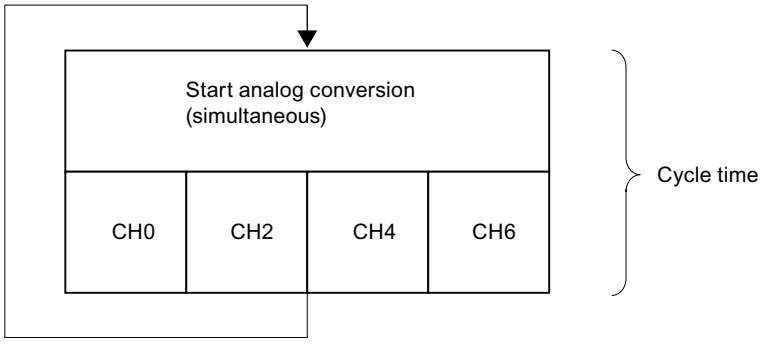

Figure 6-31 4-channel mode cycle time (hardware filter)

Cycle time of the module in 4-channel mode (hardware filter)

The converted value settles to 100 % within 80 ms and is updated every 10 ms when 4-channel mode is set. The channel and module cycle times are always identical, as the module does not change between the channels of a group: 10 ms.

Channel conversion time = channel cycle time = module cycle time = **10 ms**

Cycle time extension due to wire-break monitoring

The wire-break monitoring software function of the module is available in all operating modes.

The 8-channel mode (hardware or software filter modes) extends module cycle times by 4 ms, irrespective of the number of channels at which wire-break monitoring is enabled.

In 4-channel mode (hardware filter), the module interrupts processing of input data for the duration of 170 ms and performs a line continuity check. That is, each line continuity check extends the module cycle time by 93 ms.

Unused channels

Set the "disabled" value at the "measurement type" parameter for unused channels. This setting reduces module cycle times.

You must short-circuit all unused channels of an active group, that is, you short-circuit the positive and negative inputs of these channels.

Effect of this measure:

- Measurement errors at the channels used of a group are avoided
- Diagnostic messages from the unused channel in a group are suppressed

Short-circuit to M or L

The module does not suffer any damage if you short-circuit an input channel to M or L.. The channel continues to output valid data and does not report a diagnostics event.

Special features of channel groups with respect to hardware interrupts upon limit violation

You can set the high and low limits triggering hardware interrupts separately for each channel in *STEP 7*.

End of cycle interrupt

You can synchronize a process with the conversion cycle of the module by enabling the end of cycle interrupt. The interrupt is set when all active channels have been converted.

Table 6- 31 The table below shows the contents of the 4 bytes of additional OB40 information during process or end of cycle interrupts.

Content of the 4 bytes with additional information		2^7	2^6	2^5	2^4	2^3	2^2	2^1	2^0	Byte
Special analog flags	2 bits per channel to identify the range									
	High limit exceeded at channel	7	6	5	4	3	2	1	0	0
	Low limit exceeded at channel	7	6	5	4	3	2	1	0	1
	End of cycle event						X			2
	Free byte									3

Programming restrictions when operating SM 331; AI 8 x TC with PROFIBUS masters which only support DPV0.

When operating the SM 331; AI 8 xTC analog input module on an ET 200M PROFIBUS slave system and the PROFIBUS master is not an S7 master, certain parameters are not permitted. Non-S7 masters do not support hardware interrupts. All parameters associated with these functions are disabled for this reason. This includes hardware interrupt enable, hardware restrictions and end of cycle interrupt enable. All other parameters are allowed.

Operating the module on the ET 200M Distributed IO device

Operation of SM 331; AI 8 x TC on ET 200M requires one of the following IM 153 x:

- IM 153-1; as of 6ES7153-1AA03-0XB0, E 01
- IM 153-2; as of 6ES7153-2AA02-0XB0, E 05
- IM 153-2; as of 6ES7153-2AB01-0XB0, E 04

6.11 Analog input module SM 331, AI 6 x TC isolated (6ES7331-7PE10-0AB0)

Order number

6ES7331-7PE10-0AB0

Properties

The SM 331; AI 6 x TC isolated analog input module has the following properties:

- 6 inputs in one group
- Electrical isolation 250 VAC between channels
- Support for user calibration via SIMATIC PDM
- Compensation via internal or external cold spot comparison, or via remote access by means of a separate thermoresistor module.
- Measurement type can be set for each channel
  - Voltage
  - Temperature
- Resolution of 15 bits + sign
- Any measuring range for each channel
- Programmable diagnostics and diagnostic interrupt
- Limit value monitoring can be set for 6 channels
- Programmable hardware interrupt when limit is exceeded
- Electrically isolated from the CPU

Resolution

The maximum resolution of the measured value (15 bits + sign or 0.1 K) is independent of the programmed integration time.

Diagnostics

For information on diagnostics messages at the "group diagnostics" parameter, refer to chapter Diagnostic messages of analog input modules (Page 309).

Hardware interrupts

Hardware interrupts can be set in *STEP 7* for all channels.

Terminal assignment

The figures below show various connection possibilities. These examples apply to all channels (channels 0 to 5).

Wiring: Thermocouple with internal compensation

With this kind of compensation, the module detects the temperature at the reference junction of the connector.

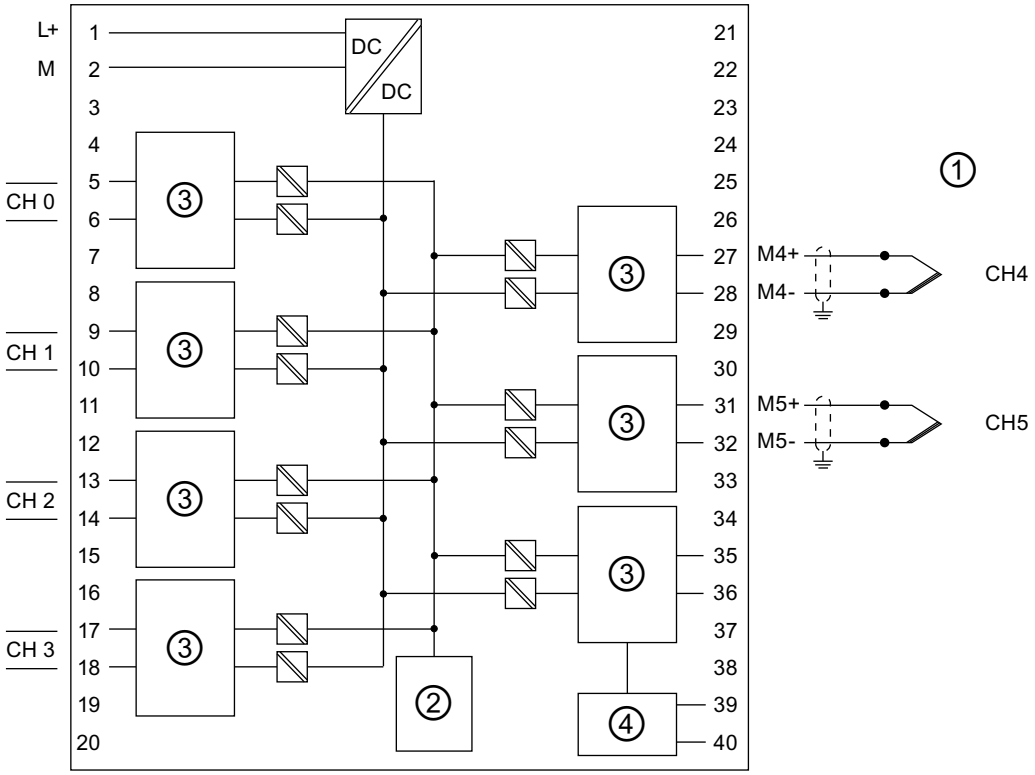

① Thermocouple with compensating line (extension) to front connector
② Backplane bus interface
③ Analog digital converter (ADC)
④ External cold spot comparison (ADC and current source)

Figure 6-32 Internal compensation

Wiring: Thermocouple with external compensation

With this type of compensation, the temperature of the terminals at the reference junction is established using a Pt 100 Klima resistance thermometer with a temperature range of -145 °C to +155 °C (see terminals 35, 36, 39, and 40).

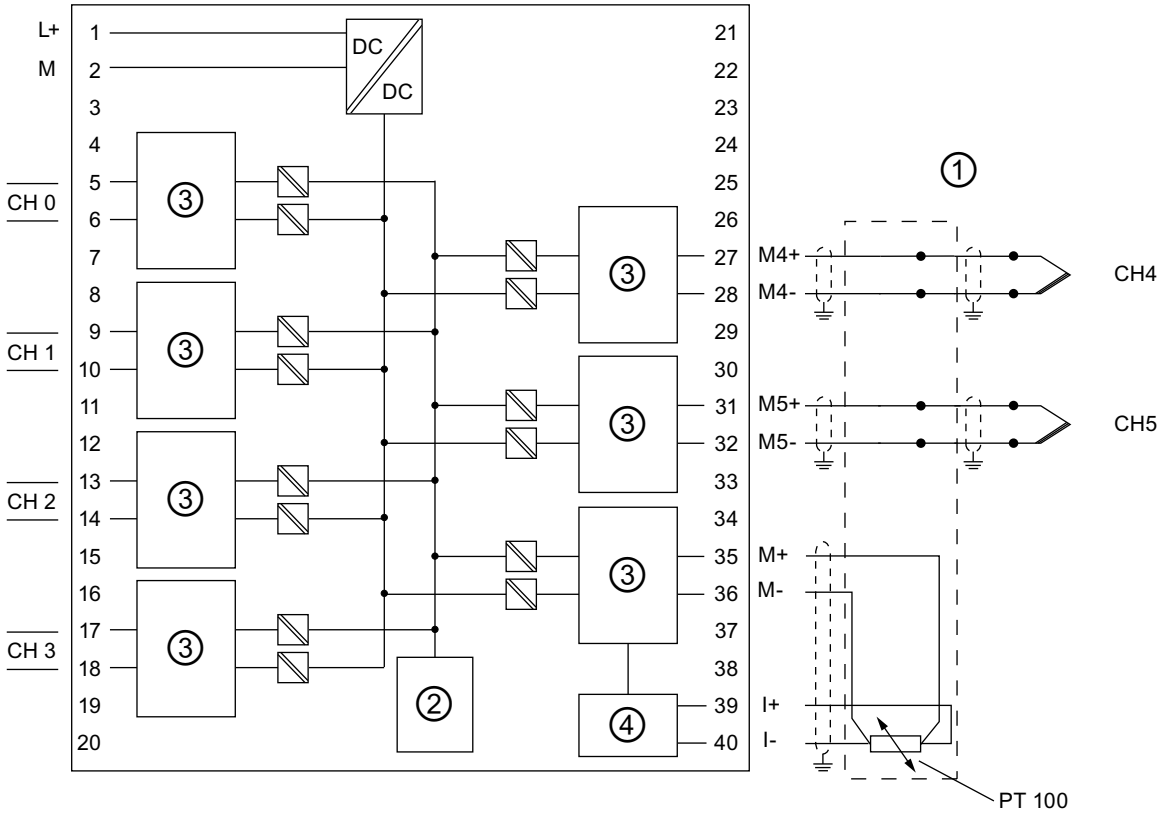

① Thermocouple with terminal for external temperature compensation via copper wire at front connector
② Backplane bus interface
③ Analog digital converter (ADC)
④ External cold spot comparison (ADC and current source)

Figure 6-33 External compensation

If no Pt 100 resistance thermometer is available, the reference junction can be read using a thermoresistor module. The measured temperature values are then transferred to module AI 6 x TC via data record 2 (for details on the structure of data record 2, see the figure "Structure of data record 2 for TC").

Wiring: Thermocouple via reference junction

With this kind of compensation, the temperature of the terminals at the reference junction is regulated at 0 °C or 50 °C.

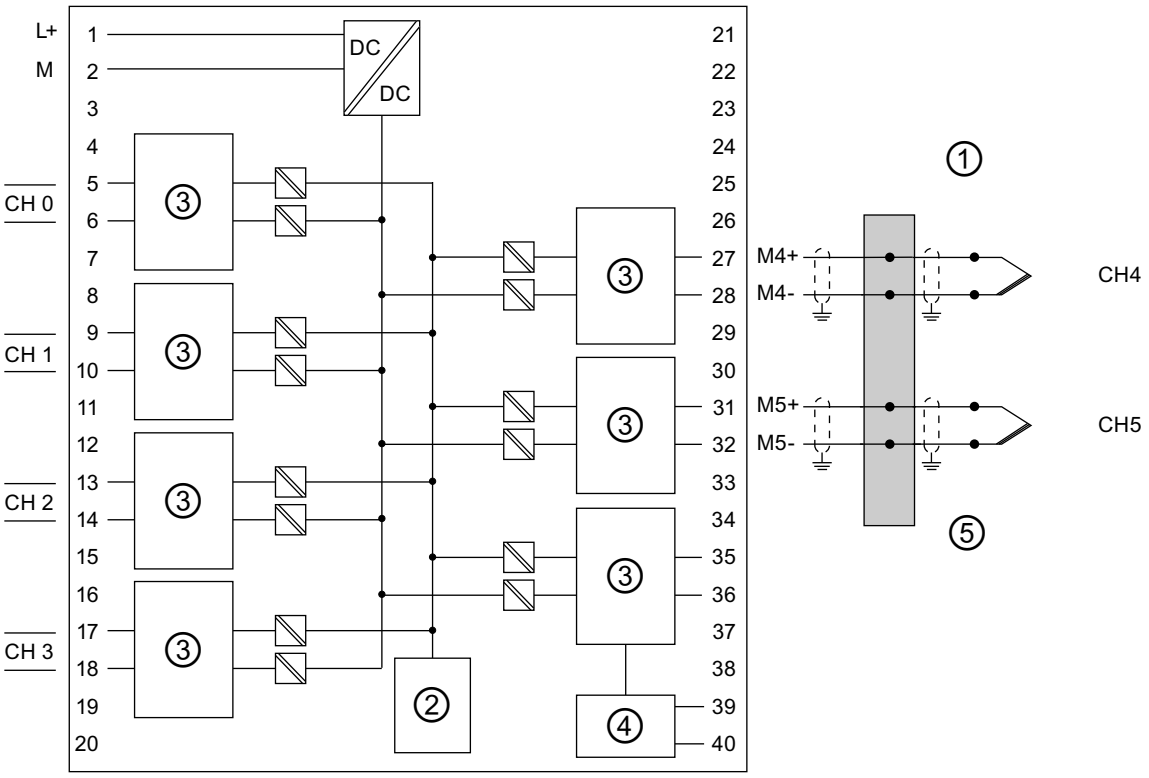

① Thermocouple via reference-junction terminal with copper wire at front connector
② Backplane bus interface
③ Analog digital converter (ADC)
④ External cold spot comparison (ADC and current source)
⑤ Reference junction regulated at 0 °C or 50 °C, for example, via compensation box (for each channel) or a thermostat

Figure 6-34 Reference junction

Wiring: Voltage input

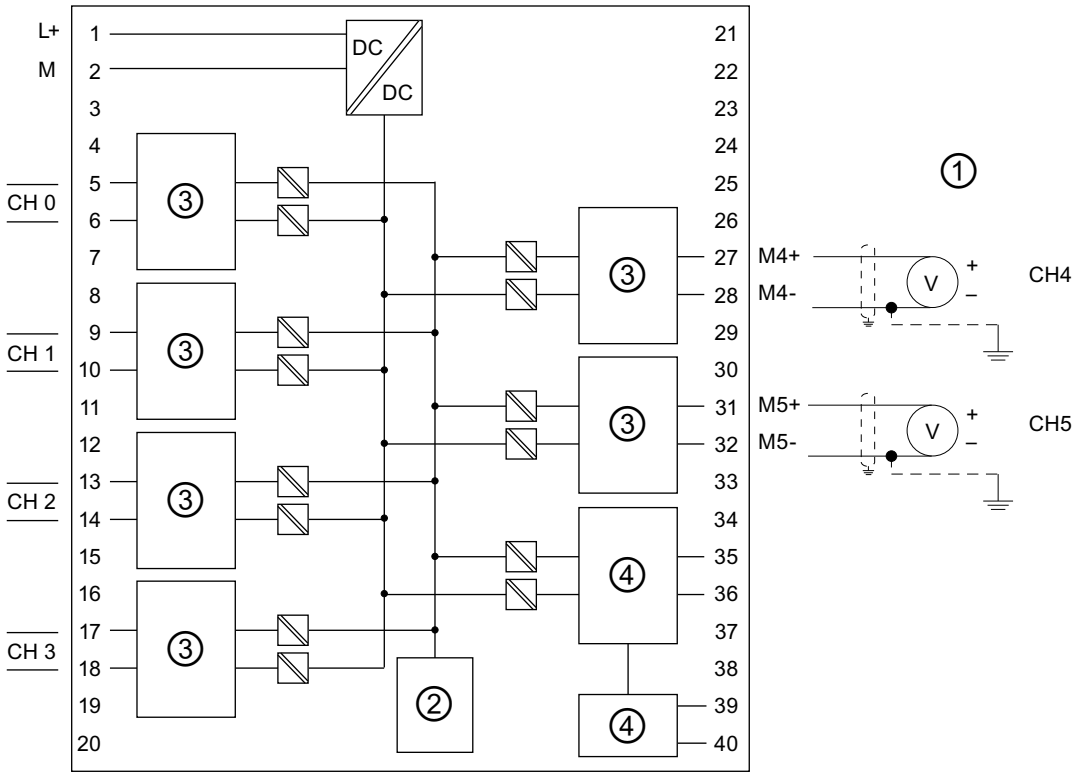

① Applied input voltage
② Backplane bus interface
③ Analog digital converter (ADC)
④ External cold spot comparison (ADC and current source)

Figure 6-35 Voltage input

Technical specifications

Technical specifications	
Dimensions and weight	
Dimensions (W x H x D) (mm)	40 x 125 x 120
Weight	approx. 272 g
Module-specific data	
Supports isochronous mode	No
Cable length • shielded	 Max. 200 m Max. 80 m in voltage ranges ≤ 80 mV and where thermocouples are used.
Voltages, currents, electrical potentials	
Rated electronics supply voltage L + • Reverse polarity protection	24 VDC Yes
Constant measuring current for resistance-type transmitters	Typ. 0.9 mA
Electrical isolation • between channels and the backplane bus • between channels and electronics power supply • between channels In groups of	 Yes Yes Yes 1
Maximum potential difference • between channels (U_{CM}) • Between the channels and $M_{internal}$ (V_{iso})	 250 VAC 250 VAC
Isolation test voltage	2,500 VDC
Current consumption • from the backplane bus • from supply voltage L+	 max. 100 mA max. 150 mA
Power loss of the module	Typ. 2.2 W
Generation of analog values	
Measuring principle	Integrating
• Integration/conversion time/resolution (per channel) programmable	Yes
• Integration time in ms(1)	10/16.67/20/100
• Basic conversion time in ms(2)	30/50/60/300
• Additional conversion time for wire-break monitoring	65 ms
• Resolution (including overshoot range)	15 bits + sign
• Interference frequency suppression at interference frequency f1 in Hz	400/60/50/10
Measured value smoothing	none/weak/medium/strong

Technical specifications			
Interference frequency suppression, error limits			
Interference frequency suppression at f = n x (f1 ± 1%), (f1 = interference frequency) n = 1.2, etc.			
• Common mode interference (CMV < 250 VAC) • Series-mode interference (peak interference value < rated input range)	> 130 dB(3) > 90 dB		
Crosstalk between inputs	> 130 dB(3)		
Operational limit (across entire temperature range, relative to measurement range end value in the selected input range, 0-60 °C). Note: This limit does not cover the temperature-error comparison points.			
Voltage input • ± 25 mV • ± 50 mV • ± 80 mV • ± 250 mV • ± 500 mV • ± 1 V	 ± 0.12% ± 0.08% ± 0.06% ± 0.05% ± 0.05% ± 0.05%		
Thermocouple(4) (5)			
Type T	-200 °C to	+400 °C	± 0.6 °C
	-230 °C to	-200 °C	± 1.6 °C
Type U	-150 °C to	+600 °C	± 0.9 °C
	-200 °C to	-150 °C	± 1.2 °C
Type E	-200 °C to	+1000 °C	± 0.5 °C
	-230 °C to	-200 °C	± 1.3 °C
Type J	-150 °C to	+1200 °C	± 0.5 °C
	-210 °C to	-150 °C	± 1.2 °C
Type L	-150 °C to	+900 °C	± 0.9 °C
	-200 °C to	-150 °C	± 1.7 °C
Type K	-150 °C to	+1372 °C	± 0.8 °C
	-220 °C to	-150 °C	± 1.6 °C
Type N	-150 °C to	+1300 °C	± 1.1 °C
	-220 °C to	-150 °C	± 1.9 °C
Type R	+100 °C to	+1769 °C	± 1.2 °C
	-50 °C to	+100 °C	± 2.2 °C
Type S	+100 °C to	+1769 °C	± 1.2 °C
	-50 °C to	+100 °C	± 1.9 °C
Type B(5)	+700 °C to	+1820 °C	± 1.7 °C
	+500 °C to	+700 °C	± 1.9 °C
	+200 °C to	+500 °C	± 4.4 °C
Type C	+100 °C to	+2315 °C	± 2.3 °C
	0 °C	+100 °C	± 2.5 °C
Type TxK/XK(L)	-150 °C	+800 °C	± 1.0 °C
	-200 °C	-150 °C	± 1.5 °C

Technical specifications			
Basic error limit (operational limit at 25 °C, relative to the measurement range end value in the selected input range)			
Voltage input • ± 25 mV • ± 50 mV • ± 80 mV • ± 250 mV • ± 500 mV • ± 1 V	± 0.04% ± 0.03% ± 0.03% ± 0.02% ± 0.02% ± 0.02%		
Thermocouple(5)			
Type T	-150 °C to	+400 °C	± 0.4 °C
	-230 °C to	-150 °C	± 1.0 °C
Type U	-150 °C to	+600 °C	± 0.4 °C
	-200 °C to	-150 °C	± 1.0 °C
Type E	-100 °C to	+1000 °C	± 0.2 °C
	-230 °C to	-100 °C	± 1.0 °C
Type J	-150 °C to	+1200 °C	± 0.2 °C
	-210 °C to	-150 °C	± 0.5 °C
Type L	-50 °C to	+900 °C	± 0.4 °C
	-200 °C to	-50 °C	± 1.0 °C
Type K	-100 °C to	+1372 °C	± 0.3 °C
	-220 °C to	-100 °C	± 1.0 °C
Type N	-150 °C to	+1300 °C	± 0.5 °C
	-220 °C to	-150 °C	± 1.2 °C
Type R	+200 °C to	+1769 °C	± 0.8 °C
	-50 °C to	+200 °C	± 1.5 °C
Type S	+100 °C to	+1769 °C	± 0.8 °C
	-50 °C to	+100 °C	± 1.5 °C
Type B(5)	+700 °C to	+1820 °C	± 1.0 °C
	+500 °C to	+700 °C	± 1.3 °C
	+200 °C to	+500 °C	± 3.0 °C
Type C	+100 °C to	+2315 °C	± 0.5 °C
	0 °C to	+100 °C	± 1.0 °C
Type TxK/XK(L)	-150 °C to	+800 °C	± 0.5 °C
	-200 °C to	-150 °C	± 1.0 °C
The accuracy of the temperature measurement with *internal compensation (terminal temperature)* is derived from: (4) (6)		• Error for the analog input of the type of thermocouple used • Measuring accuracy for the temperature of the internal reference junction ± 1.5 K	

Technical specifications	
The accuracy of the temperature measurement *with external compensation by means of thermoresistors connected locally or via remote access by means of an external thermoresistor module* is derived from: (4)	• Error for the analog input of the type of thermocouple used • Measuring accuracy for the type of thermoresistor used for compensation purposes • Error for the compensation input (local connection) ± 0.5 K • Error for the thermoresistor module (remote connection)
The accuracy of the temperature measurement with *compensation of the external reference junction, which is maintained at 0 °C/50 °C,* is derived from: (4)	• Error for the analog input of the type of thermocouple used • Measuring accuracy for the temperature of the reference junction
Temperature error (relative to input range)	
Voltage input • ± 25 mV • ± 50 mV • ± 80 mV • ± 250 mV • ± 500 mV • ± 1 V	 ± 0.0023%/K ± 0.0015%/K ± 0.0010%/K ± 0.0010 %/K ± 0.0010 %/K ± 0.0010%/K
Thermocouple (at integration time of 100 ms) Type T Type U Type E Type J Type L Type K Type N Type R Type S Type B Type C Type TxK/XK(L)	 ± 0.0060 K/K ± 0.0175 K/K ± 0.0086 K/K ± 0.0086 K/K ± 0.0175 K/K ± 0.0143 K/K ± 0.0175 K/K ± 0.0115 K/K ± 0.0115 K/K ± 0.0200 K/K ± 0.0515 K/K ± 0.0143 K/K
Linearity error (relative to input range)	± 0.05%
Repeat accuracy (in settled state at 25 °C, relative to input range)	± 0.05%

Technical specifications		
Status, interrupts, diagnostics		
Interrupts • Hardware interrupt • Diagnostic interrupt	 Programmable (channels 0 to 5) programmable	
Diagnostic functions • Group error display • Reading diagnostics information	programmable red LED (SF) Supported	
Sensor selection data		
Input ranges (rated values) / input impedance • Thermocouple • Voltage	 Type B, C, N, E, R, S, J, L, T, K, U, TxK/XK (L) ± 25 mV ± 50 mV ± 80 mV ± 250 mV ± 500 mV ± 1 V	 10 MΩ 10 MΩ 10 MΩ 10 MΩ 10 MΩ 10 MΩ
Maximum input voltage for voltage input (destruction limit)	35 VDC continuous; 75 VDC for the duration of max. 1 s (duty factor 1:20)	
Characteristics linearization	programmable	
Temperature compensation • Internal temperature compensation • External temperature compensation with Pt 100 • Compensation for 0 °C reference junction temperature • Compensation for 50 °C reference junction temperature • Technical unit of temperature measurement	programmable Supported Supported Supported Supported Degrees Centigrade/Degrees Fahrenheit/Kelvin	

Technical specifications	
Wiring of the signal sensors	using a 40-pin front connector

1. The integration time of the module at 400 Hz suppression is displayed in HW Config as 2.5 ms. To achieve the required resolution of 15 bits (plus sign), an integration time of 10 ms is needed.
2. If wire-break monitoring is active, the module cycle is performed within the basic conversion time + 65 ms. and the reaction time to a change in the step input is no longer than twice the module-cycle time. If wire-break monitoring is inactive, in the best-case scenario the module-cycle time is exactly the same as the integration time. However, this time interval cannot be guaranteed due to the time needed to process the input channels. If wire-break monitoring is inactive, the reaction time to a change in the step input is no longer than four times the integration time.
3. Common mode interference suppression and crosstalk between inputs are executed at > 130 dB, if 10 Hz, 50 Hz, or 60 Hz has been selected as the interference frequency. If 400 Hz has been selected as the interference frequency, common mode interference suppression and crosstalk between inputs are implemented at > 110 dB
4. The operational limit comprises only the basic error of the analog input at Ta = 25 °C and the total temperature error. The total error must include the compensation error of the cold reference junction. Internal compensation of the reference junction = max. 1.5 °C External compensation of the reference junction = accuracy of the external thermoresistor used ± 0.1 °C. External compensation of the reference junction, which maintains the reference junction at 0 °C or 50 °C = accuracy of temperature control for the reference junction.
5. An integration time of 100 ms is recommended for thermocouple measurements. Integration times set lower than this will result in a higher repeat-accuracy error for the temperature measurements.
6. With thermocouple type B, a missing compensation of the reference junction temperature has no significant effect owing to its slight increase from approx. 0 °C to 40 °C. With missing compensation and set measuring type "Compensation to 0 °C", the deviation with thermocouple type B at measuring temperatures between:
   - 700 °C and 1820 °C is < 0.5 °C
   - 500 °C and 700 °C is < 0.7 °C.

   If the reference junction temperature is approximately that of the module temperature, "internal compensation" should be set. As a result, the error for the temperature range from 500 °C to 1820 °C is reduced to < 0.5 °C.

6.11.1 Measurement types and measuring ranges

Measurement types and measuring ranges

The measurement type and measuring range is configured at the "measuring range" parameter in *STEP 7*.

Selected measurement type	Measuring range
Voltage	± 25 mV ± 50 mV ± 80 mV ± 250 mV ± 500 mV ± 1 V
TC-L00C: (thermocouple, linear, 0 °C reference temperature) TC-L50C: (thermocouple, linear, 50 °C reference temperature) TC-IL: (thermocouple, linear, internal comparison) TC-EL: (thermocouple, linear, external comparison)	Type B Type C Type E Type J Type K Type L Type N Type R Type S Type T Type U Type TxK/XK(L)

6.11.2 Programmable parameters

Adjustable parameters

For general information on programming analog modules, refer to the section titled Programming analog modules (Page 307).

Parameters	Range of values	Default	Type of parameter	Scope
Diagnostics • Group diagnostics • With wirebreak monitoring	 Yes/no Yes/no	 No No	Static	Channel
Enable • Diagnostic interrupt • Hardware interrupt when limit exceeded • Auto-calibration	 Yes/no Yes/no Yes/no	 No No Yes	Dynamic	Module
• Temperature unit	Degrees Celsius; degrees Fahrenheit; Kelvin	degrees Celsius	Dynamic	Module
• Interference frequency suppression	400 Hz; 60 Hz; 50 Hz; 10 Hz	50 Hz	Dynamic	Module
Measurement • Measurement type	disabled TC-IL thermocouple (linear, internal comparison) TC-EL thermocouple (linear, external comparison) TC-L00C thermocouple (linear, 0 °C reference temperature) TC-L50C thermocouple (linear, 50 °C reference temperature)	TC-IL:	Dynamic	Channel
• Measuring range	See chapter Measurement types and measuring ranges (Page 444)	Type K		
• Response to open thermocouple	Overflow; underflow	Overflow	Dynamic	Channel
• Smoothing	None Low Average High	None	Dynamic	Channel
• External reference junction	Local thermoresistor	Local thermoresistor	Dynamic	Channel

Parameters	Range of values	Default	Type of parameter	Scope
• Temperature coefficient	0.003850 (IPTS-68) 0.003850 (ITS-90) 0.003916 0.003902 0.003920 0.003910 (GOST)	0.003850 (IPTS-68)	Dynamic	Module
Hardware-interrupt trigger • High limit • Low limit	 32511 to -32512 From - 32512 to 32511	 32767 -32768	Dynamic	Channel

6.11.3 Additional information relating to SM 331; AI 6 x TC

Using the module

The following hardware and software requirements must be met to use the SM 331; AI 6 x TC isolated S7-300 analog input module:

- If the module is to be used centrally in S7-300, all CPUs must have firmware version 2.6 or higher (with the exception of 6ES7318-2AJ00-0AB0).
- If the module is to be used on a distributed basis in ET 200M, the following IM 153 modules are suitable:
  6ES7153-1AA03-0XB0, product version 12 or higher
  6ES7153-2BA02-0XB0
  6ES7153-2BA82-0XB0
  6ES7153-4BA00-0XB0
  6ES7153-4AA01-0XB0
- A GSD file must be used if the module is part of a distributed installation and controlled by a master produced by a third-party manufacturer with DPV1 support (operation with DPV0 is not supported). The GSD file for the selected IM 153 is available for download from the Internet (http://www.siemens.com/automation/service&support).
- STEP 7 V5.4 SP4 (HSP0158) or higher
- For user calibration:
  SIMATIC PDM V6.0 + SP3 + HF2 (HSP0158) or PDM V6.0 + SP4 or higher
  and EDD for ET 200M "DP_IOSystem_Siemens_ET200M_Module.Device" V1.1.10 or higher.

Unused channels

Set the "disabled" value at the "measurement type" parameter for unused channels. Unused channels should also be short-circuited at the connection plug.

Effect of this measure:

- You prevent measurement errors at the unused channels.
- You suppress diagnostic messages from the unused channels.

Short-circuit to M or L

The module does not suffer any damage if you short-circuit an input channel to M or L. The channel continues to output valid data and does not report a diagnostics event.

Special features of channel groups with respect to hardware interrupts when limit is exceeded

You can set the high and low limits triggering hardware interrupts separately for each channel in STEP 7.

Hardware interrupt

The table below shows the contents of the 4 bytes of additional OB40 information during a hardware interrupt.

Content of the 4 bytes with additional information		2^7	2^6	2^5	2^4	2^3	2^2	2^1	2^0	Byte
Special analog flags	2 bits per channel to identify the range									
	High limit exceeded at channel			5	4	3	2	1	0	0
	Low limit undershot at channel			5	4	3	2	1	0	1
	Free byte									2
	Free byte									3

Startup characteristics and compensation time monitoring (watchdog) for external cold spot compensation via remote thermoresistor

When the module starts up, all inputs report an overflow (32767). Once a compensation value has been received via data record 2, the module starts to read the TC inputs and to output correct data. If the module does not receive any data from data record 2 within 5 minutes of startup, a reference channel fault is reported in the standard channel diagnostics data. If enabled, a diagnostic interrupt is sent.

The module features time monitoring (watchdog) set to 5 minutes, which is reset when a new compensation value is received via data record 2. If the module does not receive any data from data record 2 within the 5 minute interval set for the time-monitoring function in normal operation, a reference channel fault is reported in the standard channel diagnostics data. If enabled, a diagnostic interrupt is sent.

Internal calibration while the process is running

The module can compensate most of the internal temperature-drift errors. Internal calibration while the process is running is always executed after startup, when parameters are reassigned, and when the power is switched on/off. Once the relevant parameters have been activated, internal calibration while the process is running is also performed if the ambient temperature at the module changes by 5 degrees Celsius. Enabling calibration while the process is running interrupts the module I/O cycle until calibration is complete. The duration of the interruption depends on the programmed interference frequency; see the table below for information about this relationship.

Duration of interruption caused by calibration while the process is running

Interference frequency	Duration of interruption
10 Hz	600 ms
50 Hz	120 ms
60 Hz	100 ms
400 Hz (100 Hz)	60 ms

Calibration while the process is running should be activated to ensure measuring accuracy over a long period of time. Some applications do not permit an interruption of the I/O cycle. In such cases, you can disable the parameter for calibration while the process is running, although this will result in less accurate measurements over time. The parameter for calibration is activated as standard while the process is running.

Compensation of the reference junction

If the measuring point is exposed to a different temperature than the free ends of the thermocouple (connection point), a voltage known as the thermoelectric voltage arises between the free ends.
The level of the thermoelectric voltage depends on the difference between the temperature at the measuring point and that at the free ends, as well as on the type of materials combined in the thermocouple. Because a thermocouple always detects any temperature difference, the free ends at the reference junction must be maintained at a certain temperature to determine the temperature at the measuring point.

External compensation of the reference junction via remote thermoresistor

The reference-junction temperature can also be measured via an external module and transferred to the AI 6 x TC isolated module by means of SFC 58 in data record 2 (DR2).

The permitted reference temperature corresponds to the Pt100 climatic temperature range for platinum thermoresistors.

$$-145.0\ °C \leq t_{ref} \leq +155.0\ °C$$
$$-229.0\ °F < t_{ref} < +311.0\ °F$$
$$+128.2\ K < t_{ref} < +327.6\ K$$

The Kelvin measurement is only limited to 327.6 if the reference temperature is output in technical units. If the reference temperature is reported in standard units, the Kelvin measurement limit is 428.2 K.

If a reference value above the permitted temperature limit is received in DR2, it will cause a reference channel fault, which is displayed in the standard channel diagnostic data. If enabled, a diagnostic interrupt is sent.

Note

If an analog input module such as AI 8 x thermoresistor is used to measure the reference-junction temperature, the thermoresistor module parameters for the output structure and the measuring accuracy must be represented by bytes 0 and 1 in data record 2. This is shown in the figure "Structure of data record 2 for SM 331; AI 6 x TC". If the external thermoresistor module does not provide correct information about data structure and scaling, it will lead to inaccurate measurements being output by the isolated SM 331; AI 6 x TC module.

Structure of data record 2 for SM 331; AI 6 x TC

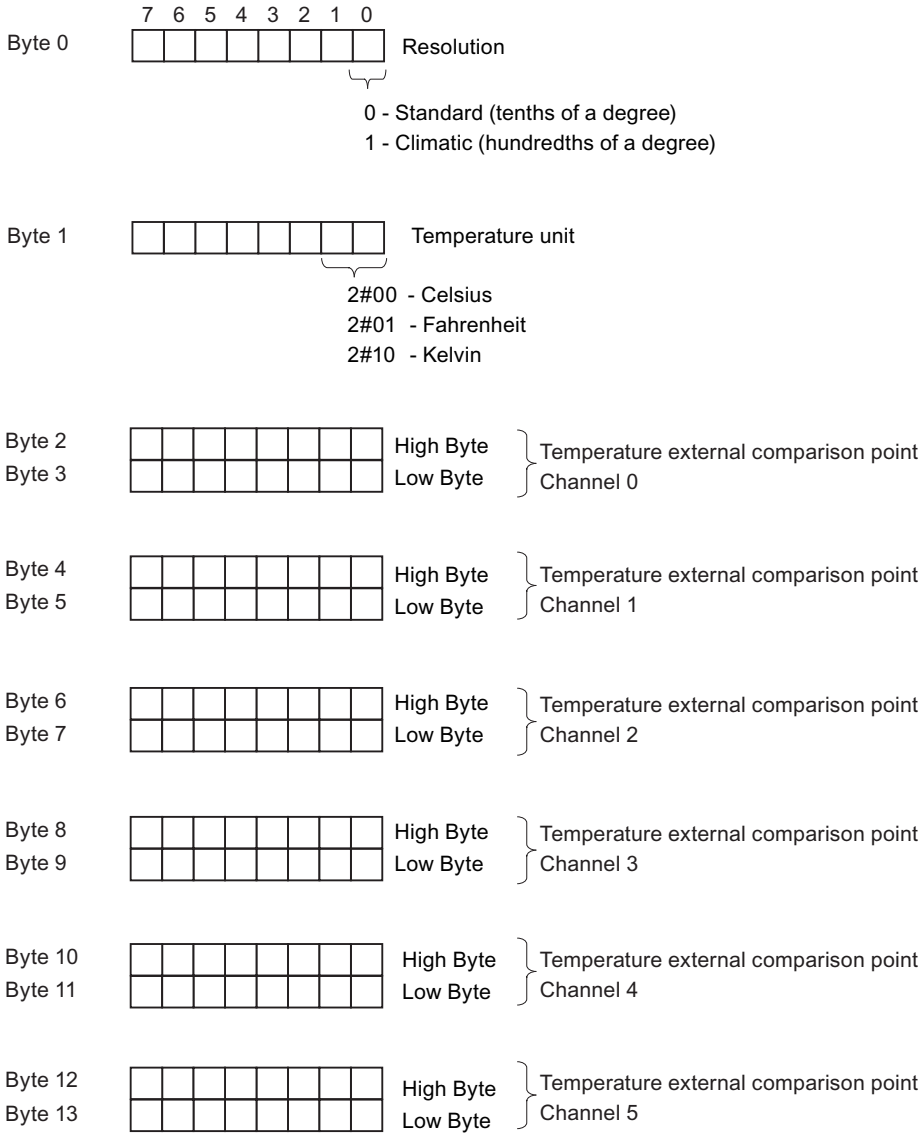

Figure 6-36 Structure of data record 2 for SM 331; AI 6 x TC

Compensation of the thermocouple via an external Pt100 element with external thermoresistor module

Because of the flexible structure of data record 2, you can use a separate external Pt100 element for each channel. In addition, the channels can also be grouped together by means of the user application in such a way that they all use the same external Pt100. This simply requires the same temperature value to be specified in DR2 for all the channels which use the same reference temperature.

Note

Reference-junction compensation also results in an error in the temperature measured by the isolated AI 6 x TC module. For this reason, great care must be taken when detecting the reference junction. To keep this error to an absolute minimum, the reference-junction temperature must remain as constant as possible.

Example: Transfer of a temperature value as a cold-spot temperature for channels 0 to 5, from a thermoresistor module to AI 6 x TC:

Input address of AI 6 x TC: 238 (module address)
Input address of the thermoresistor: 128 (channel address)

Occupied memory:
M 20.0: Request bit for SFC "WR_REC"
M 20.1: Busy bit for SFC "WR_REC"
MW 22: Return value for SFC "WR_REC"
MW 0 to MW 12: Memory for data transfer (see table below).

```
UN      M    20.0        // Check the request: new cold spot temperature
UN      M    20.1        // Check whether WR_REC is busy
SPB     END              // Skip, if no transfer is required
                                ist

U       M    20.1        //Check whether WR_REC is busy
 SPB     WRT

         //Create the memory for data transfer
         L      B#16#01          // Transfer the temperature in hundredthsl
                                 // of a degree (Pt100 climatic))
         T      MB    0
         L      B#16#02          // Transer the temperature in Kelvin
         T      MB    1
         L      PEW    128       // Read out the input address of the used channel
                                    of
                                 // the thermoresistor module
         T      MW    2          // for channel 0 of AI 6 x TC
         T      MW    4          // for channel 1 of AI 6 x TC
         T      MW    6          // for channel 2 of AI 6 x TC
         T      MW    8          // for channel 3 of AI 6 x TC
         T      MW    10         // for channel 4 of AI 6 x TC
         T      MW    12         // for channel 5 ofAI 6 x TC

         // Transfer the cold-spot temperature to AI 6 x TC
WRT:     CALL "WR_REC"
                REQ        :=M20.0             // Request bit for data transfer
IOID        :=B#16#54
LADDR       :=W#16#EE           // Input address of AI 6 x TC
RECNUM      :=B#16#2            // Data record number must be set to 2

RECORD      :=P#M 0.0 Byte 14   // Indicator for the memory for data
                                                // transfer, 14 bytes long
RET_VAL     :=MW22              // Return value for SFC "WR_REC"
BUSY        :=M20.1             // Busy bit of SFC "WR_REC"

U       M    20.1                       // check whether WR_REC is busy
 SPB     END
         CLR
         =      M    20.0                // Reset request for cold-spot
                                         // temperature

END:      NOP 0
```

This is just an example. The logic and memory allocation must be adapted to the structure of the particular PLC program used.

The return value of SFC "WR_REC" (MW 22) can be evaluated in accordance with the structure of the PLC program used. Additional information is available in the manual titled System Software for S7-300/400 System and Standard Functions (http://support.automation.siemens.com/WW/view/en/1214574).

6.11.4 Firmware update via HW Config for analog input module SM 331; AI 6 x TC

Introduction

Depending on the available comaptible function updates, the module AL 6 x TC can be updated to the newest firmware version.

The most recent firmware versions are available from your Siemens representative or from the Internet (http://www.siemens.com/automation/service&support).

Requirements

- STEP 7 V 5.4 SP4 (HSP0158) or higher
- For central use of the module AI 6 x TC in a S7-300, the firmware update must occur in the CPU-operating mode STOP. If the CPU is in the RUN operating mode, it may result in unexpected behavior and the module will first be available again after a network off/network on.
- If the module AI 6 x TC is set in a distributed IO device ET 200M, a firmware update is also possible in the CPU-operating mode RUN.

Firmware update

This is how you update the firmware of a central or distributed module with the IM 153:

1. Select the module AI 6 x TC in HW Config.
2. Select the "SPS" > "Update Firmware" menu command.
3. Use the "Browse" button to select the path to the firmware files (*.upd).
4. Click the "Execute" button.
   – The module performs the firmware update.

For additional information, refer to the STEP 7 online help.

Note

- During the firmware update, the OB 83 (alarm due to removing and inserting modules), the OB 85 (program execution error) and the OB 86 (error due to module rack failure) are opened. If the diagnostics alarm of the module is approved, the OB 82 will also be opened during the firmware update. Make sure that the OB is set correspondingly.
- If the red LED (SF) on the module blinks, an error occurred during the firmware update and the update must be repeated. In this case, the bootloader version Ex.x.x is displayed in the online diagnostics.
- A firmware update through HW-config is not permitted if the AI 6 x TC module is in redundant mode.

Identification of the firmware

After the firmware update, you must label the firmware version on the module.

6.11.5 I&M data for identifying the analog input module SM 331; AI 6 x TC

Properties

I data: Information about the module, which is normally found on the module casing. I-data is write-protected. They include:

- Hardware release status
- Firmware release status
- Serial number

M data: System-dependent information (e.g. plant designation).

M data is created during configuration.

All identification data (I&M-data) is retentively saved in a module and supports you with the following tasks:

- Error search and repair in the system
- Testing the system configuration
- Finding changes to the system hardware

Reading and writing the identification data with STEP 7

System-dependent information is configured in the properties dialog field of the module.

You obtain information on the module (I data) from the module status dialog. The system-dependent information on the module is displayed here too.

Note

I&M data can only be written if the CPU is in the STOP operating mode.

The AI 6 x TC supports only I&M0 and I&M1 data.

6.11.6 Calibration of analog input module SM 331; AI 6 x TC

Introduction

The SM 331 is calibrated at the factory and complies with the specified accuracy values. As a rule, there is no need to recalibrate the module.

With certain systems, it may be advisable or even a requirement laid down in standards (as required by particular institutions in the food and beverage or pharmaceutical industries) to recalibrate the module once it has been integrated into the system, for example, at specific time intervals.

Particularly in systems where sensors detect and/or process relatively low voltages and/or currents, it may be advisable to perform recalibration when the module is in the system including all connected cables. This approach compensates any influence by cables and/or temperature.

If you carry out a calibration procedure, new calibration values are detected and saved retentively on the module. This means that the calibration values determined for the module at the factory prior to delivery are not lost when users perform their own calibration work. You can revert to these original calibration values at any time.

Note

The calibration values from each channel are saved retentively on the module for a specific measuring range, which means they only apply to the measuring range in which the user calibration work was performed.

If the parameters of a channel which has active user-calibration values are reassigned to change the measuring range, the calibration values saved at the factory for this channel and this measuring range are used from this point on.

However, the user-calibration values still remain in the memory; they are not overwritten until the user calibrates the channel again. But if the original measuring range is reset for this channel without the user performing the calibration procedure again, the user-calibration values which have already been established become effective once more.

Requirements

The calibration function can only be used in a distributed installation and in conjunction with the SIMATIC PDM ("Process Device Manager").

The following requirements must be met to use the module calibration functions: SIMATIC PDM V6.0 + SP3 or higher + HF2 in conjunction with HSP158, or SIMATIC PDM V6.0 + SP4 or higher, and the EDD for the ET 200M, "DP_IOSystem_Siemens_ET200M_Module.Device", Version V1.1.10 or higher

User calibration is not permitted if the AI 6 x TC module is running in redundant mode.

Launching the calibration function

The following diagrams show the sequence of a user calibration in SIMATIC PDM V6.0 + SP5. More recent versions of SIMATIC PDM can deviate from the content of these diagrams.

The module calibration function is launched in the SIMATIC PDM via <Device ⇒ Calibration> for the selected module.

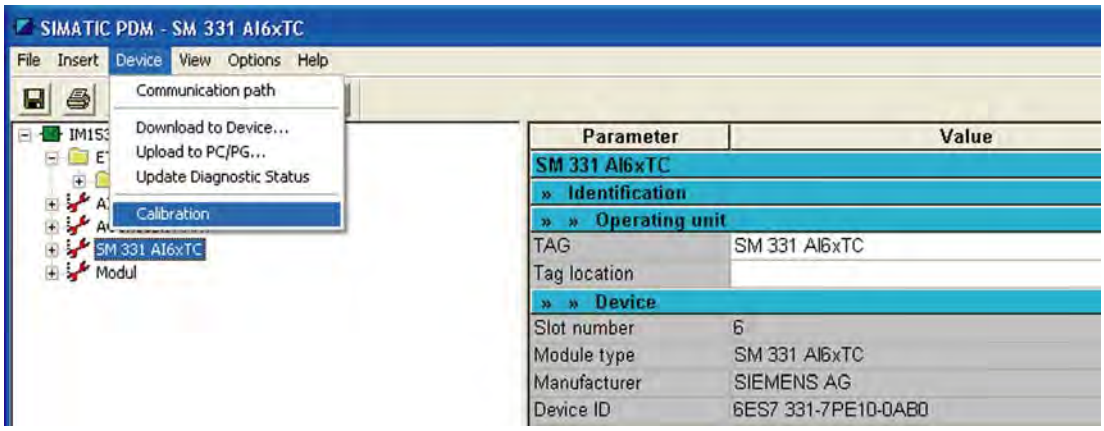

Figure 6-37 Calibration function

Once the calibration function has been launched, the calibration start screen appears. Each time a new channel is selected, the module reads the following general data and calibration values:

General data:

- Measuring range: Currently programmed measuring range for the selected channel
- Date: Date and time when the displayed calibration values were determined
- Calibration: Indicates whether the currently active calibration values are factory-set or user values

Calibration values:

- Offset: Currently active offset for the analog digital converter
- Gain: Currently active gain for the analog digital converter
- CJ Offset: Currently active temperature offset for the internal reference-temperature sensor (only relevant for TC-IL thermocouples)
- TC Gain: Currently active gain for recording the temperature (only relevant for TC-IL, TC-EL, TC-L00C, and TC-L50C thermocouples)

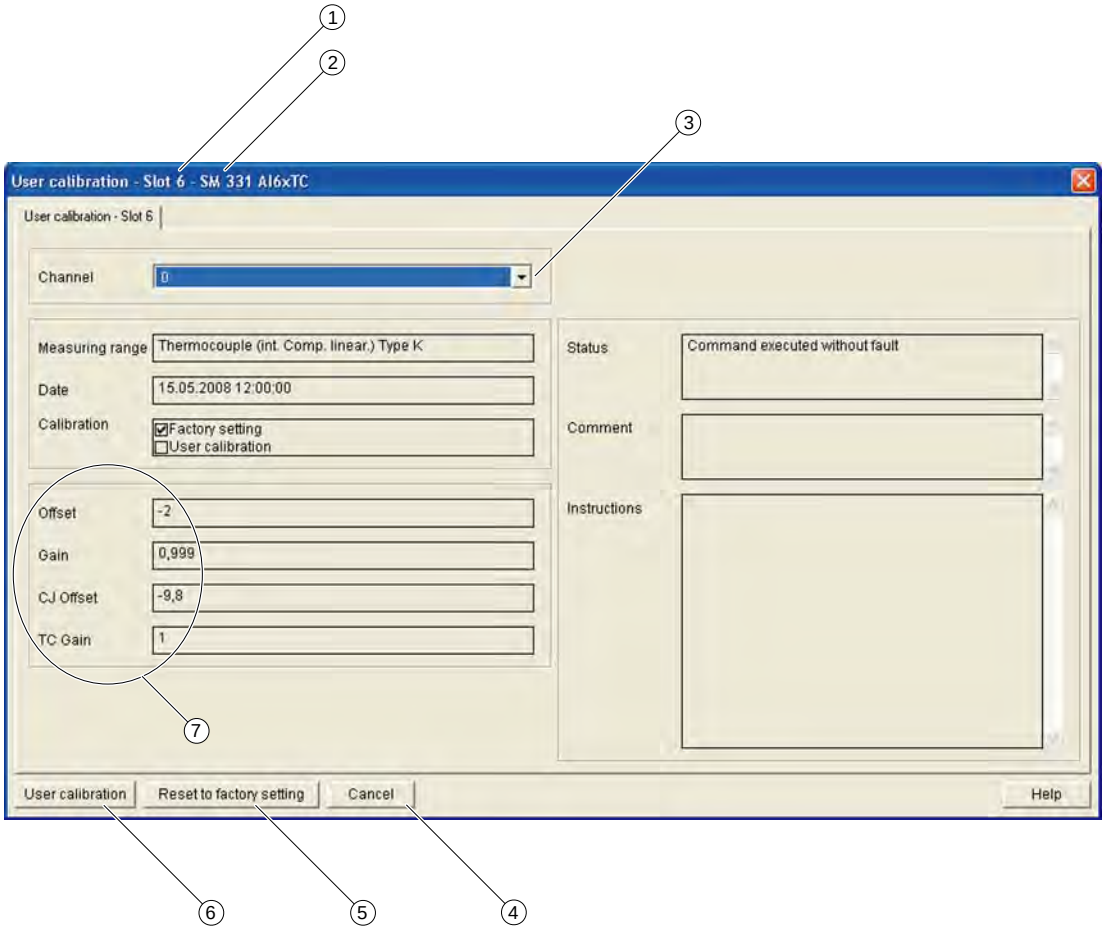

① Slot address of the module
② Current system ID (HID)
③ Selection of the channel to be calibrated
④ Cancels the calibration function
⑤ Resets the calibration values of the selected channel to the factory settings
⑥ Starts user calibration for the selected channel
⑦ Current calibration values

Figure 6-38 User-calibration values

Options

Now you can:

- Start user calibration for the selected channel
  -> "User calibration" button
- Reset the calibration values set at the factory for the selected channel
  -> "Reset to factory setting" button
- Cancel the calibration function
  -> "Cancel" button

Note

If you reset the currently active channel to its factory settings, the original calibration values saved on the module when it was delivered become valid again. Any user-calibration values which may exist for this channel are then lost. You cannot restore these user-calibration values.

User calibration

User calibration is started for the selected channel by pressing the "User calibration" button.

A 24 V load voltage must be applied at the module for calibration.
The user calibration function re-establishes the calibration values required by the selected channel in accordance with the measuring range which has been programmed for that channel.

Calibration can be executed in the CPU's RUN or STOP operating modes. Please note that in the CPU's RUN operating mode, the module does not return any correct analog values to the process for the duration of the calibration.

Note

While user calibration is ongoing, none of the module channels can handle new process values.

- All analog input values of the module are set to 0x7FFF ("invalid analog value") until calibration is complete.
- All channels indicate this status by means of a corresponding channel-diagnostic function using the second type of diagnosis (see Section 1.7, "Diagnostics of the analog input module SM 331; AI 6 x TC isolated").

The previously selected channel is calibrated using the calibration display which is output.

Calibration consists of several different steps, during which the individual calibration values are determined.

- If a fault occurs during calibration or if new parameters are assigned to the module, the calibration of the relevant channel is canceled and the most recently active calibration values for the channel become effective once more. All of the calibration values recorded up to this point are lost. The module can now handle the current process values once again.
- Calibration can be canceled at any time once it has been started. Following cancelation, the previously active calibration values take effect again and the calibration values recorded up to this point are lost. The module can now handle the current process values once again.

You must provide a voltage and/or temperature during user calibration. You do this by using the appropriate external wiring and an external voltage/temperature transmitter. As shown in the figure "User-calibration status", the "Instructions" field indicates the numbers of the pins where the calibration stimulus can be applied. The first pin number corresponds to the positive terminal, the second to the negative terminal. The accuracy of the calibration depends on the accuracy of the voltage/temperature supplied. To ensure that the module maintains the specified measuring accuracy following user calibration, the voltage/temperature provided must demonstrate an accuracy at least twice that defined for the module. Inaccurate voltages or temperatures will result in an incorrect calibration.

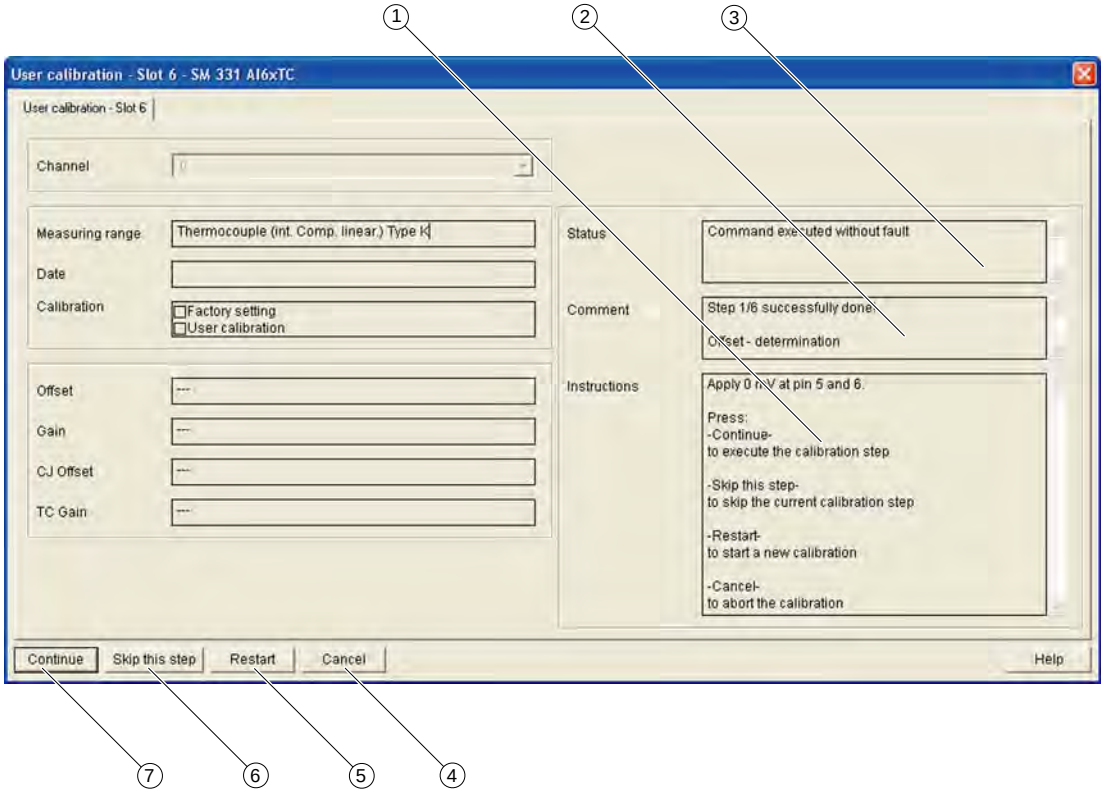

① Here you will find instructions on how to carry out the currently active calibration step
② Here you will find information relating to the currently active calibration step
③ Here you will find information relating to the current status of the calibration procedure
④ Cancels the calibration function completely
⑤ Cancels the currently active calibration and returns to the calibration start screen
⑥ Skips the currently active calibration step
⑦ Confirms the currently active calibration step and proceeds to the next step

Figure 6-39 User-calibration status

Status

Several different calibration steps are required to calibrate a channel, depending on the measurement type which has been set. The "Status" field indicates whether the last calibration step was completed with or without a fault. If a fault occurs while a calibration step is being executed, the fault is indicated here and the calibration for that channel is canceled. All calibration values recorded up to that point are deleted. The calibration values which were active before the user-calibration function was launched take effect once more.

Comment

The following entries are displayed in the "Comment" field:

- The number of calibration steps completed thus far
- The number of calibration steps which still need to be carried out for the channel to be fully calibrated
- The calibration value currently being determined by the module

Instructions

The "Instructions" field indicates which actions the user has to personally carry out for the currently active calibration step. Perform the actions indicated here and confirm by pressing the "Continue" button. The module now executes the actions required for the currently active calibration step. If this step is processed without a fault, the function proceeds to the next calibration step.

If you want to avoid recording existing calibration values again during user calibration, confirm the currently active calibration step by pressing the "Skip this step" button (rather than "Continue"). In this case, the factory-set calibration value is used for the calibration step which has been skipped (see "Comment" field).

In the last calibration step, the values determined during the course of calibration are displayed.

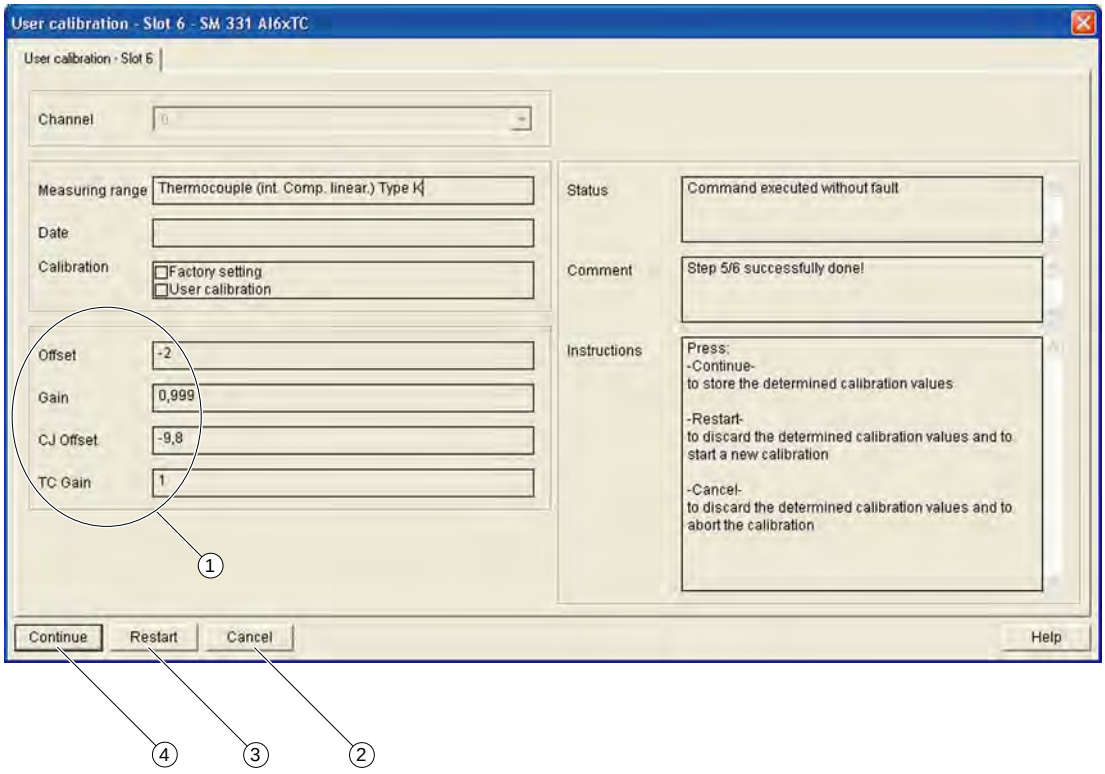

① New calibration values

② Cancels the calibration function completely

③ Cancels the currently active calibration and returns to the calibration start screen

④ Confirms the determined calibration values, saves the values, and returns to the calibration start screen

Figure 6-40 User-calibration values

You can now adopt these calibration values as the new values for this channel by pressing the "Continue" button. The calibration values are saved retentively and the channel calibration is complete.

If you do not want to use the displayed calibration values, you can either return to the start screen and start a new calibration procedure by pressing the "Restart" button, or exit calibration altogether by pressing the "Cancel" button.

6.12 Analog output module SM 332; AO 8 x 12 bit; (6ES7332-5HF00-0AB0)

Order number

6ES7332-5HF00-0AB0

Properties

- 8 outputs in one group
- The output can be selected by individual channel
  - Voltage output
  - Current output
- Resolution 12 bits
- Programmable diagnostics and diagnostic interrupt
- Programmable diagnostic interrupt
- Electrically isolated from the backplane bus interface and load voltage
- Supports parameter reassignment in RUN

Diagnostics

For information on diagnostics messages at the "group diagnostics" parameter, refer to chapter Diagnostic messages of analog output modules (Page 310).

Terminal assignment

The diagrams below show various wiring options. These examples apply to all channels (channel 0 to 7).

Note

When you switch the rated load voltage (L+) off and on, the outputs can return incorrect voltage/current values for the duration of about 500 ms.

Wiring: 2 and 4-wire connection for voltage output

The following image depicts:

- 2-wire connection, no compensation for line impedance and
- 4-wire connection with compensation for line impedance

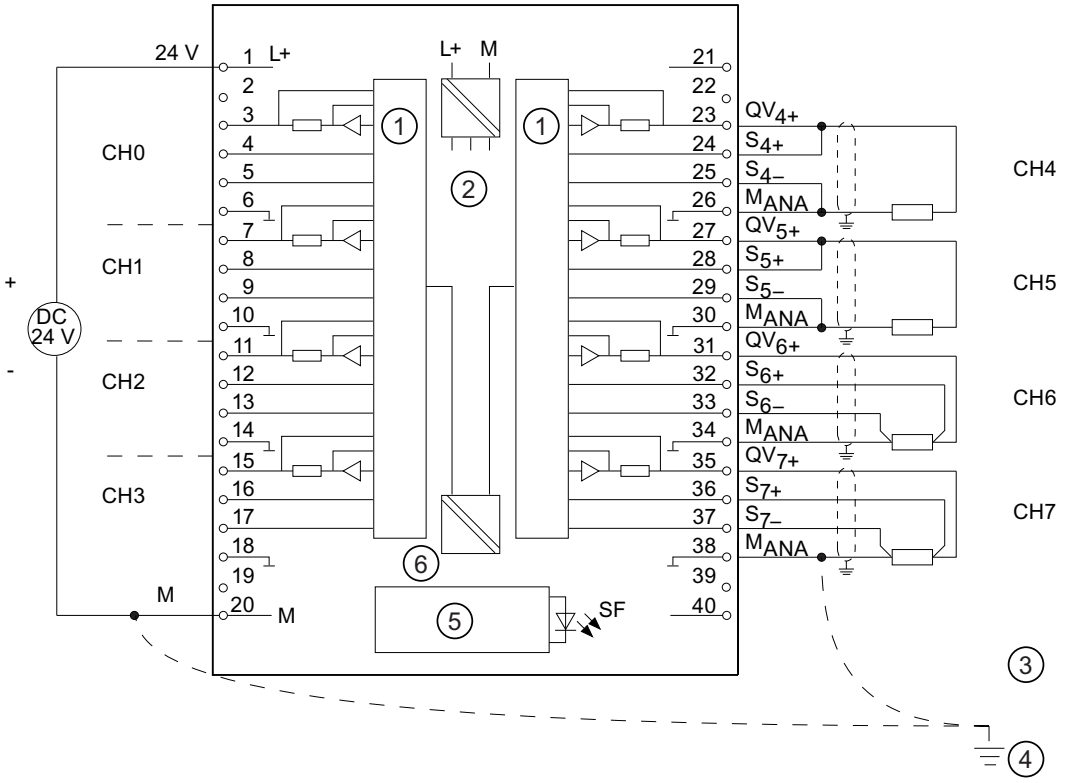

① DAC
② Internal supply
③ Equipotential bonding
④ Functional ground
⑤ Backplane bus interface
⑥ Electrical isolation

Figure 6-41 Wiring and block diagrams

Wiring: Current output

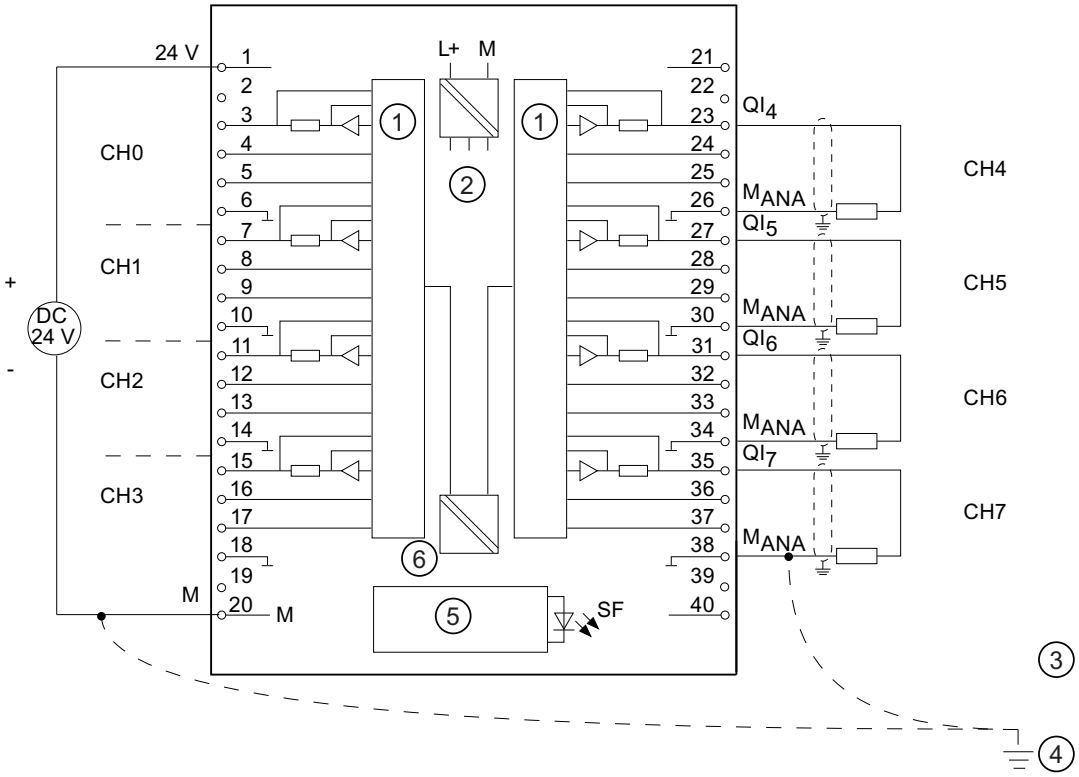

① DAC
② Internal supply
③ Equipotential bonding
④ Functional ground
⑤ Backplane bus interface
⑥ Electrical isolation

Figure 6-42 Wiring and block diagrams

Technical specifications

Technical specifications	
Dimensions and weight	
Dimensions W x H x D (mm)	40 x 125 x 117
Weight	ca. 272 g
Module-specific data	
Supports parameter reassignment in RUN	Yes
Reaction of non-programmed outputs	Return the output value which was valid before the parameterization
Supports isochronous mode	no
Number of inputs	8
Cable length • shielded	 max. 200 m
Voltages, currents, electrical potentials	
Rated load voltage L+ • Reverse polarity protection	24 VDC yes
• Electrical isolation • between channels and the backplane bus • between channels and electronics power supply • between channels • between channels and load voltage L+	 yes yes no yes
Maximum potential difference • between S- and M_{ANA} (CMV) • between M_{ANA} and $M_{internal}$ (V_{ISO})	 3 VDC 75 VDC / 60 VAC
Isolation test voltage	500 VDC
Current consumption • from the backplane bus • From supply voltage L+	 max. 100 mA max. 340 mA
Power loss of the module	typ. 6.0 W
Generation of analog values	
Resolution, including sign • ± 10 V; ± 20 mA; 4 mA to 20 mA; 1 V to 5 V • 0 V to 10 V; 0 mA to 20 mA; • Conversion time (per channel)	 11 bits + sign 12 Bit max. 0.8 ms
Transient recovery time • with resistive load • with capacitive load • with inductive load	 0.2 ms 3.3 ms 0.5 ms (1 mH) 3.3 ms (10 mH)

Technical specifications	
Interference frequency suppression, error limits	
• Crosstalk between outputs	> 40 dB
Operational limit (across entire temperature range, relative to measurement range end value in the selected output range)	
• Voltage output • Current output	± 0,5 % ± 0,6 %
Basic error limit (operational limit at 25 °C, relative to the measurement range end value in the selected output range)	
• Output voltage • Output current • Temperature error (relative to output range) • Linearity error (relative to output range) • Repeat accuracy (in transient state at 25 °C, relative to output range) • Output ripple; bandwidth 0 kHz to 50 kHz (relative to output range)	± 0,4 % ± 0,5 % ± 0.002 %/K + 0,05 % ± 0,05 % ± 0,05 %
Status, interrupts, diagnostics	
Interrupts • Diagnostic interrupt	 programmable
Diagnostic functions • Group error display • Reading diagnostics information	programmable red LED (SF) supported
Actuator selection data	
Output ranges (rated values)	
• Voltage	± 10 V 0 V to 10 V 1 V to 5 V
• Current	± 20 mA 0 mA to 20 mA 4 mA to 20 mA
Load impedance (in the rated output range)	
• For voltage outputs – Capacitive load	Min. 1 kΩ Max. 1 µF
• For current outputs – at CMV < 1 V – with inductive load	max. 500 Ω max. 600 Ω max. 10 mH
Voltage output • Short-circuit protection • Short-circuit current	 yes max. 25 mA
Current output • noload voltage	 max. 18 V

Technical specifications	
• Destruction limit against external voltages/currents • Voltage at outputs to M_{ANA} • Current	max. 18 V continuous; 75 V for a duration of max. 1 s (duty factor 1:20) max. 50 mA d.c.
Wiring of the actuators • for voltage output 4–wire connection • for current output 2–wire connection	using a 40-pin front connector supported supported

6.12.1 SM 332; AO 8 x 12 Bit - Output ranges

Introduction

You can configure the outputs for operation as voltage or current outputs, or disable them. You program the outputs at the "output type" parameter in *STEP 7*.

Output type "Voltage" and output range "± 10 V" are set by default at the module. You can always use this combination of output type and range without having to program the SM 332; AO 8 x 12 Bit in *STEP 7*.

Table 6- 32 Output ranges

Selected type of output	Output range
Voltage	1 V to 5 V 0 V to 10 V ± 10 V
Current	0 mA to 20 mA 4 mA to 20 mA ± 20 mA

See also

Representation of analog values for analog output channels (Page 292)

6.12.2 Programmable parameters

Introduction

For general information on programming analog modules, refer to the chapter Programming analog modules (Page 307).

The table below provides an overview of configurable parameters, including defaults:

Table 6- 33 Overview of the parameters of SM 332; AO 8 x 12 Bit

Parameter	Range of values		Default	Parameter type	Scope
Enable • Diagnostic interrupt	yes/no		no	dynamic	Module
Diagnostics • Group diagnostics	Yes/no		No	static	Channel
Output • Output type • Output range	disabled Voltage Current See chapter output ranges (Page 468)		V ± 10 V	dynamic	Channel
Reaction to CPU STOP	ASS HLV	Outputs zero current/voltage Hold last value	ASS	dynamic	Channel

Assigning parameters to channels

The parameters can be set separately at each output channel of SM 332; AO 8 x 12 Bit. You can assign separate parameters to each output channel.

Assign the parameters you set at the SFCs in the user program to the channel groups. Each output channel of SM 332; AO 8 x 12 Bit is thus assigned to a channel group, i.e. output channel 0 > channel group 0, for example.

Note

The output may carry invalid interim values if you modify output ranges while SM 332; AO 8 x 12 bit is in RUN.

See also

Diagnostic messages of analog output modules (Page 310)

6.12.3 Additional information on SM 332; AO 8 x 12 Bit

Unused channels

To take unused output channels of SM 332; AO 8 x 12 Bit off power, set the "disabled" argument at the "output type" parameter. Disabled channels do not have to be wired.

Line continuity check

SM 332; AO 8 x 12 Bit only performs a line continuity check at the current outputs.

In output ranges 0 mA to 20 mA and ± 20 mA, a "reliable" wire-break check is not possible for output values of ± 200 µA.

Short-circuit test

SM 332; AO 8 x 12 Bit only performs a short-circuit test at the voltage outputs.

6.13 Analog output module SM 332; AO 4 x 16 bit; isochrone; (6ES7332-7ND02-0AB0)

Order number

6ES7332-7ND02-0AB0

Properties

- 4 outputs in 4 channel groups
- The output channels can be programmed as
  - Voltage output
  - Current output
- Resolution 16 bits
- Supports isochronous mode
- Supports parameter reassignment in RUN
- Programmable diagnostics and diagnostic interrupt
- Electrical isolation between:
  - backplane bus interface and analog output channel
  - analog output channels
  - analog output and L+, M
  - Backplane bus circuit and L+, M
- Supports parameter reassignment in RUN

Diagnostics

For information on diagnostic messages at the "group diagnostics" parameter, refer to chapter Diagnostic messages of analog output modules (Page 310).

Terminal assignment

The diagrams below show various wiring options.

Note

When you switch the rated load voltage (L+) off and on, the output may carry invalid interim values for the duration of ca. 10 ms.

Wiring: 4-wire connection

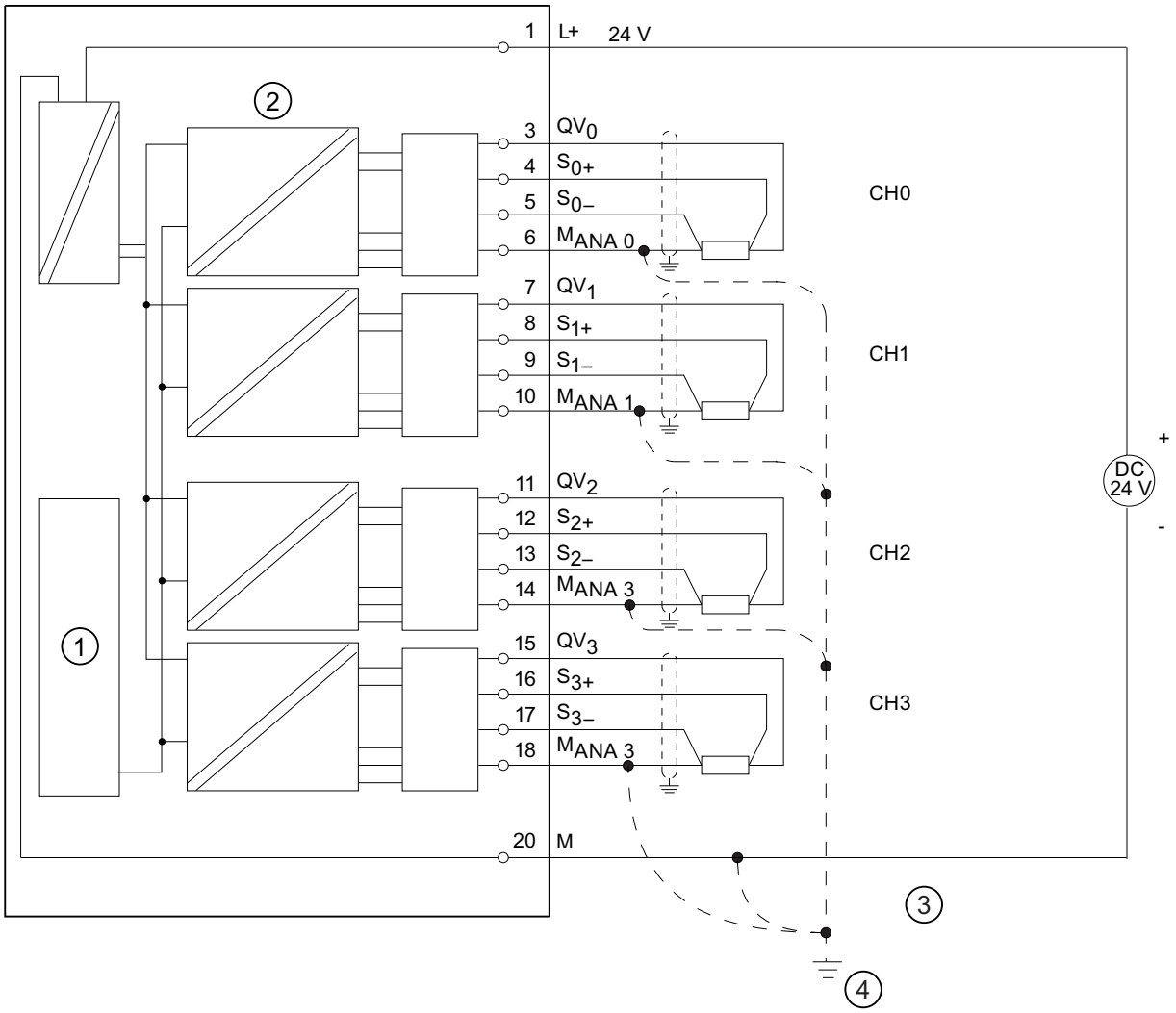

① Backplane bus interface
② Electrical isolation
③ Equipotential bonding
④ Functional ground

Figure 6-43 Wiring and block diagrams

Wiring: Current output

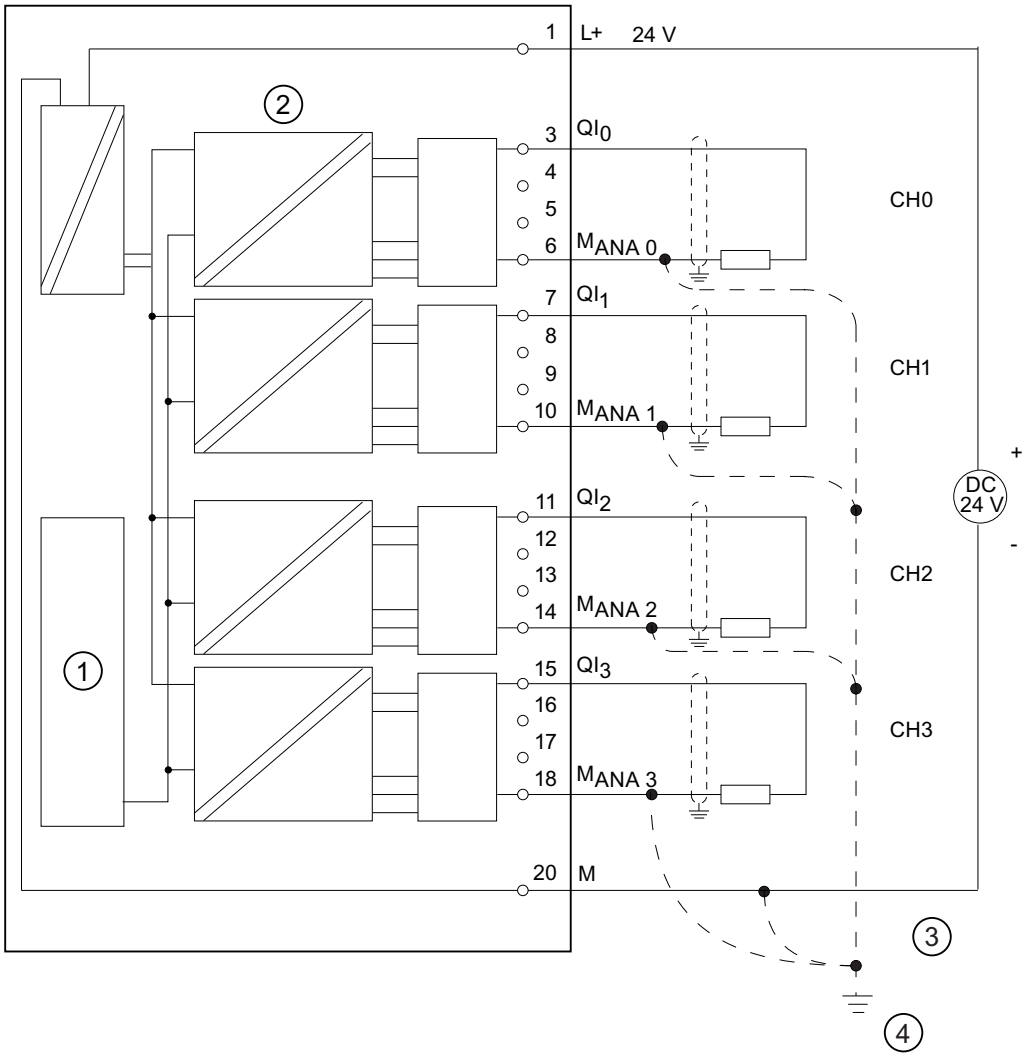

① Backplane bus interface
② Electrical isolation
③ Equipotential bonding
④ Functional earthing

Figure 6-44 Wiring and block diagrams

Technical specifications

Technical specifications	
Dimensions and weight	
Dimensions W x H x D (mm)	40 x 125 x 117
Weight	ca. 220 g
Module-specific data	
Supports parameter reassignment in RUN • Reaction of non-programmed outputs	yes return the output value which was valid before the parameterization
Supports isochronous mode	yes
Number of outputs	4
Cable length • shielded	max. 200 m
Voltages, currents and potentials	
Rated load voltage L+ • Reverse polarity protection	24 VDC yes
Electrical isolation • between channels and the backplane bus • between channels and electronics power supply • between channels	 yes yes yes
Maximum potential difference • between outputs (ECM) • between M_{ANA} and $M_{internal}$ (V_{ISO})	 200 VDC / 120 VAC 200 VDC / 120 VAC
Isolation test voltage	1500 VDC
Current consumption • from the backplane bus • from load voltage L+ (no-load)	 max. 120 mA max. 290 mA
Power loss of the module	typ. 3 W
Generation of analog values	
Resolution (including sign) • ± 10 V • 0 V to 10 V • 1 V to 5 V • ± 20 mA • 0 mA to 20 mA • 4 mA to 20 mA	 16 bits 15 bits 14 bits 16 bits 15 bits 15 bits
Conversion time (per channel) • in standard mode • in isochronous mode	 <200 µs 640 µs

Technical specifications	
Basic execution time of the module (independent of the number of enabled channels) • in standard mode • in isochronous mode	 <800 µs 750 µs
Transient recovery time • with resistive load • with capacitive load • with inductive load	 0.2 ms 3.3 ms 0.5 ms (1 mH) / 3.3 ms (10 mH)
Noise suppression and error limits	
Crosstalk between outputs	> 100 dB
Operational limit (across entire temperature range, relative to measurement range end value in the selected output range)	
• Voltage output • Current output	±0,12% ±0,18%
Basic error limit (operational limit at 25 °C, relative to the measurement range end value in the selected output range)	
• Voltage output ± 10 V 0 V to 10 V 1 V to 5 V	 ±0,02% ±0,02% ±0,04%
• Current output ± 20 mA 0 mA to 20 mA 4 mA to 20 mA	 ±0,02% ±0,02% ±0,04%
Temperature error (relative to output range) • Voltage output • Current output	 ± 0.0025%/K ± 0.004%/K
Linearity error (relative to output range)	±0,004%
Repeat accuracy (in transient state at 25°, relative to output range)	±0,002 %
Output ripple; range 0 Hz to 50 kHz (relative to output range)	±0,05 %
Status, interrupts, diagnostics	
Interrupts • Diagnostic interrupt	 programmable
Diagnostic functions • Group error display • Reading diagnostic information	programmable red LED (SF) supported
Set substitute values	yes, programmable

Technical specifications	
Actuator selection data	
Output ranges (rated values)	
• Voltage	± 10 V 0 V to 10 V 1 V to 5 V
• Current	± 20 mA 0 mA to 20 mA 4 mA to 20 mA
Load impedance (in the rated range of the output)	
• For voltage outputs – Capacitive load	Min. 1 kΩ Max. 1 µF
• For current outputs – inductive load	max. 500 Ω max. 1 mH
Voltage output • Short-circuit protection • Short-circuit current	 yes max. 40 mA
Current output • noload voltage	 max. 18 V
Destruction limit against external voltages/currents • Voltage at outputs to M_{ANA} • Current	 max. 15 V, continuous 75 V for the duration of max. 1 s (duty factor 1:20) 20) max. 50 mA d.c.
Wiring of the actuators • for voltage output – 4-wire connection (measuring lead) • for current output – 2-wire connection	using a 20-pin front connector supported supported

6.13.1 SM 332; AO 4 x 16 Bit - Output ranges

Introduction

You can configure the outputs for operation as voltage or current outputs, or disable these. You program the outputs at the "output type" parameter in *STEP 7*.

The output type "Voltage" and output range "± 10 V" are set by default at the module. You can always use this combination of output type and range without having to program the SM 332; AO 4 x 16 Bit in *STEP 7*.

Output ranges

You program the output ranges for voltage and current outputs in *STEP 7*.

Table 6- 34 Output ranges SM 332; AO 4 x 16 Bit

Selected type of output	Output range
Voltage	1 V to 5 V 0 V to 10 V ± 10 V
Current	0 mA to 20 mA 4 mA to 20 mA ± 20 mA

6.13.2 Programmable parameters

Introduction

For general information on programming analog modules, refer to the chapter Programming analog modules (Page 307).

The table below provides overview of programmable parameters and of their defaults.

Table 6- 35 Overview of the parameters of SM 332; AO 4 x 16 Bit

Parameters	Range of values		Default	Parameter type	Scope
Enable • Diagnostic interrupt	yes/no		no	dynamic	Module
Diagnostics • Group diagnostics	yes/no		no	static	Channel
Output • Output type • Output range	disabled Voltage Current See chapter Output ranges for SM 332; AO 4 x 16 Bit (Page 477)		V ± 10 V	dynamic	Channel
Reaction to CPU STOP	ASS HLV	Outputs zero current/voltage Hold last value	ASS	dynamic	Channel

Assigning parameters to channels

The parameters can be set separately at each output channel of SM 332; AO 4 x 16 Bit. You can assign separate parameters to each output channel.

Assign the parameters you set at the SFCs in the user program to the channel groups. Each output channel of SM 332; AO 4 x 16 Bit is thus assigned to a channel group, i.e. output channel 0 > channel group 0, for example.

Note

The output may carry invalid interim values if you modify output ranges while SM 332; AO 4 x 16 bit is in RUN.

See also

Diagnostic messages of analog output modules (Page 310)

6.13.3 Isochronous mode

Properties

Reproducible reaction times (i.e. of the same length) are achieved in a SIMATIC system by means of a constant DP bus cycle, and synchronization of the single cyclic processes outlined below:

- Independent user program cycle. The length of the cycle time may vary due to non-cyclic program branching.
- Independent and variable DP cycle on the PROFIBUS subnet
- Cyclic operation of the backplane bus of the DP slave.
- Cyclic signal preparation and conversion at the electronic modules of the DP slave.

The constant DP cycle runs in synchronism and at the same length. The CPU run levels (OB61 to OB64) and isochronous IO are synchronized with this cycle. I/O data are therefore transferred at defined and constant intervals (isochronous mode.) Maximum flutter: ±50 µs.

Requirements

- The DP master and slave must support isochronous mode. You require *STEP 7* V5.2 or higher.

Mode of operation: Isochronous mode

Conditions of isochronous mode:

Processing and activation time T_{WA} between reading the output value to the transfer buffer and loading it into the D/A converter for output	750 µs
T_{DPmin}	1100 µs
Diagnostic interrupt	max. 4 x T_{DP}

Calculation of filter and processing times

The same time conditions always apply, regardless of the number of configured channels.

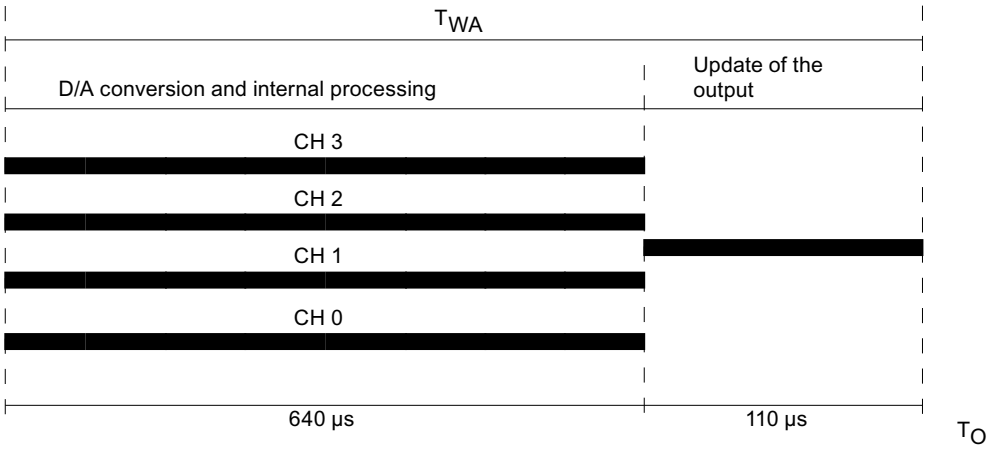

Figure 6-45 Calculation of the processing time and refresh time of the output

Definition of isochronous mode

Within the time T_O - T_{WA}, the module reads the output data and saves these internally. After the internal processing time of each channel, the results are written to the various DACs.

Further information

For further information on isochronous mode, refer to the *STEP 7* Online Help, in the operating instructions ET 200M Distributed IO System (http://support.automation.siemens.com/WW/view/en/1142798)and in the Synchronicity (http://support.automation.siemens.com/WW/view/en/15218045) manuals.

6.13.4 Additional information on SM 332; AO 4 x 16 Bit

Unused channels

To take unused output channels of SM 332; AO 4 x 16 Bit off power, set the "disabled" argument at the "output type" parameter, and leave the terminal open.

Substitute values

You can configure the SM 332; AO 4 x 16 Bit for CPU STOP mode as follows: Outputs off power, hold last value or set substitute values. The set substitute values must lie within the output range.

6.14 Analog output module SM 332; AO 4 x 12 Bit; (6ES7332-5HD01-0AB0)

Order number

6ES7332-5HD01-0AB0

Properties

- 4 outputs in one group
- The output can be selected by individual channel
  - Voltage output
  - Current output
- Resolution 12 bits
- Programmable diagnostics and diagnostic interrupt
- Electrically isolated to backplane bus interface and load voltage
- Supports parameter reassignment in RUN

Diagnostics

For information on diagnostic messages at the "group diagnostics" parameter, refer to chapter Diagnostic messages of analog output modules (Page 310).

Terminal assignment

The diagrams below show various wiring options.

Note

When you switch the rated load voltage (L+) off and on, the outputs can return incorrect voltage/current values for the duration of about 500 ms.

Wiring: 2 and 4-wire connection for voltage output

The following Fig. represents the 2-wire connection with no compensation for line resistors and the 4-wire connection with compensation for line resistors.

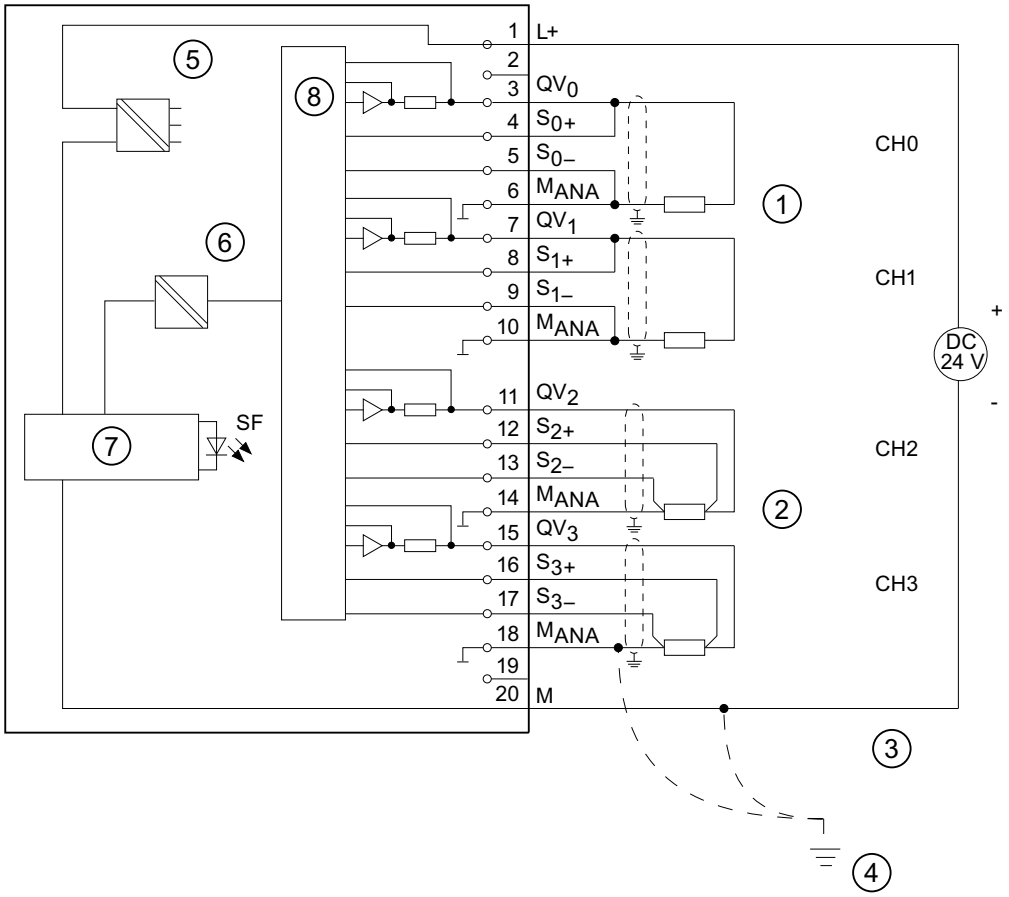

① 2-wire connection, no compensation for line resistors
② 4-wire connection, with compensation for line resistors
③ Equipotential bonding
④ Functional earthing
⑤ Internal supply
⑥ Electrical isolation
⑦ Backplane bus interface
⑧ Analog-to-Digital Converter (ADC)

Figure 6-46 Wiring and block diagrams

Wiring: Current output

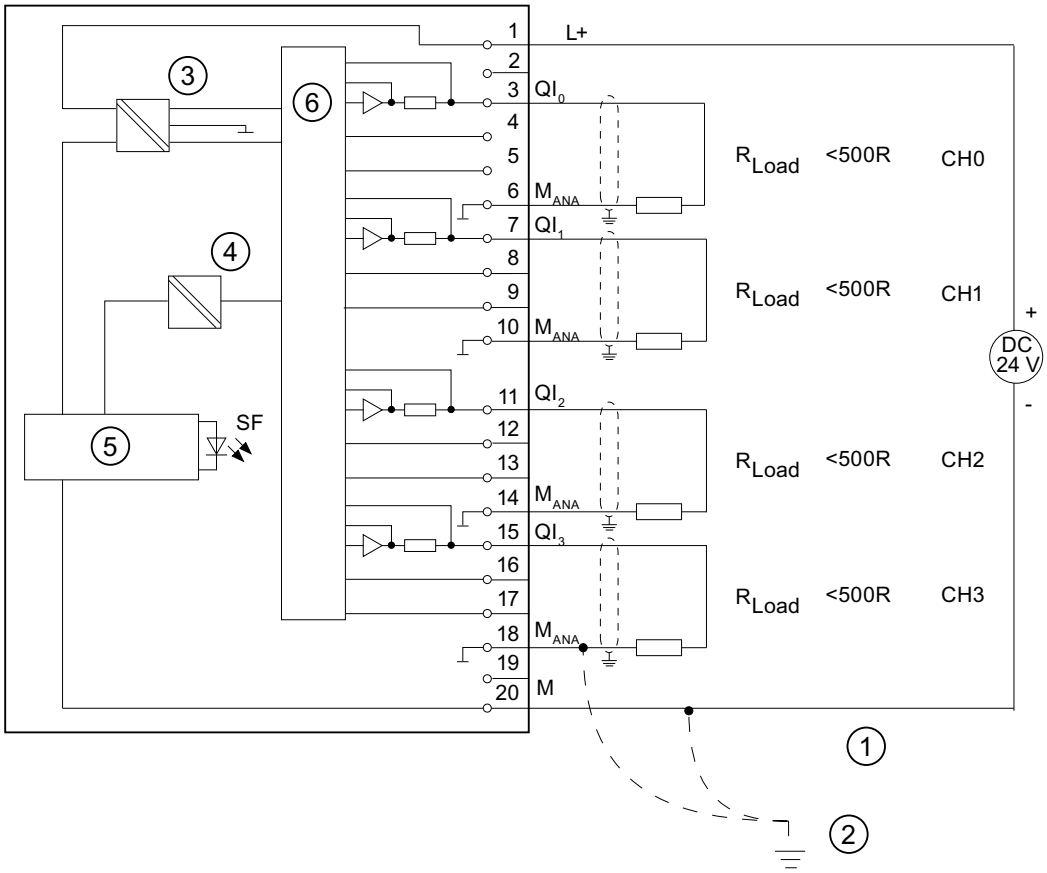

① Equipotential bonding
② Functional earthing
③ Internal supply
④ Electrical isolation
⑤ Backplane bus interface
⑥ Analog-to-Digital Converter (ADC)

Figure 6-47 Wiring and block diagrams

Technical specifications

Technical specifications	
Dimensions and weight	
Dimensions W x H x D (mm)	40 x 125 x 117
Weight	ca. 220 g
Module-specific data	
Supports parameter reassignment in RUN	yes
Reaction of non-programmed outputs	Return the output value which was valid before the parameterization
Supports isochronous mode	no
Number of outputs	4
Cable length • shielded	 max. 200 m
Voltages, currents, electrical potentials	
Rated load voltage L+ • Reverse polarity protection	24 VDC Yes
Electrical isolation • between channels and the backplane bus • between channels and electronics power supply • between channels • between channels and load voltage L+	 Yes Yes no Yes
Maximum potential difference • between S- and M_{ANA} (CMV) • between M_{ANA} and $M_{internal}$ (V_{iso})	 3 VDC 75 VDC / 60 VAC
Isolation test voltage	500 VDC
Current consumption • from the backplane bus • from load voltage L+ (no-load)	 max. 60 mA max. 240 mA
Power loss of the module	typ. 3 W
Generation of analog values	
Resolution (including overshoot range) • ± 10 V; ± 20 mA; • 4 mA to 20 mA; 1 V to 5 V • 0 V to 10 V; 0 mA to 20 mA	 11 bits + sign 12 bits
Conversion time (per channel)	max. 0.8 ms
Transient recovery time • with resistive load • with capacitive load • with inductive load	 0.2 ms 3.3 ms 0.5 ms (1 mH) 3.3 ms (10 mH)

Technical specifications	
Interference frequency suppression, error limits	
Crosstalk between outputs	> 40 dB
Operational limit (across entire temperature range, relative to measurement range end value in the selected output range)	
• Voltage output • Current output	± 0,5 % ± 0,6 %
Basic error limit (operational limit at 25 °C, relative to the measurement range end value in the selected output range)	
• Voltage output • Current output	± 0,4 % ± 0,5 %
Temperature error (relative to output range)	± 0.002 %/K
Linearity error (relative to output range)	± 0,05 %
Repeat accuracy (in settled state at 25 °C, relative to output range)	± 0,05 %
Output ripple; range 0 Hz to 50 kHz (relative to output range)	± 0,05 %
Status, interrupts, diagnostics	
Interrupts • Diagnostic interrupt	 Programmable
Diagnostic functions • Group fault display • Reading diagnostic information	programmable Red LED (SF) Supported
Setting substitute values	Yes, programmable
Actuator selection data	
Output ranges (rated values)	
• Voltage	± 10 V 0 V to 10 V 1 V to 5 V
• Current	± 20 mA 0 mA to 20 mA 4 mA to 20 mA
Load impedance (in the rated range of the output)	
• For voltage outputs – Capacitive load	Min. 1 kΩ Max. 1 µF
• For current outputs – at CMV < 1 V – inductive load	max. 500 Ω max. 600 Ω max. 10 mH
Voltage output • Short-circuit protection • Short-circuit current	 Yes max. 25 mA
Current output • noload voltage	 max. 18 V

Technical specifications	
Destruction limit against external voltages/currents	
• Voltage at outputs to M_{ANA}	max. 18 V continuous; 75 V for the duration of max. 1 s (duty factor 1:20)
• Current	max. 50 mA d.c.
Wiring of the actuators	using a 20-pin front connector
• for voltage output	
– 4-wire connection (measuring lead)	supported
• for current output	
– 2-wire connection	supported

Parameter reassignment in RUN

If you reassign parameters in RUN, the following special characteristic applies.

SF LED is lit:

If a diagnostics was pending prior to reconfiguration, the SF LEDs (on CPU, IM or module) may be lit even though diagnostics is no longer pending and the module is operating correctly.

Solution:

- Only assign new parameters if no diagnostics is pending, or
- unplug module and plug it in again.

6.14.1 Output ranges of SM 332; AO 4 x 12 Bit

Introduction

You can configure the outputs for operation as voltage or current outputs, or disable them. You program the outputs at the "output type" parameter in *STEP 7*.

The output type "Voltage" and output range "± 10 V" are set by default at the module. You can always use this combination of output type and range without having to program the SM 332; AO 4 x 12 Bit in *STEP 7*.

Output ranges

Program the voltage and current output ranges in *STEP 7*.

Table 6- 36 Output ranges of SM 332; AO 4 x 12 Bit

Selected type of output	Output range
Voltage	1 V to 5 V 0 V to 10 V ± 10 V
Current	0 mA to 20 mA 4 mA to 20 mA ± 20 mA

6.14.2 Programmable parameters

Introduction

For general information on programming analog modules, refer to the chapter Programming analog modules (Page 307).

The table below provides overview of programmable parameters and of their defaults.

Table 6- 37 Overview of the parameters of SM 332; AO 4 x 12 Bit

Parameters	Range of values		Default	Parameter type	Scope
Enable • Diagnostic interrupt	yes/no		no	dynamic	Module
Diagnostics • Group diagnostics	yes/no		no	static	Channel
Output • Output type • Output range	disabled Voltage Current See table of *Output ranges for SM 332; AO 4 x 12 Bit*		V ± 10 V	dynamic	Channel
Reaction to CPU STOP	ASS HLV SSV	Outputs zero current/voltage Hold last value Set substitute value	ASS	dynamic	Channel

Assigning parameters to channels

The parameters can be set separately at each output channel of SM 332; AO 4 x 12 Bit. You can assign separate parameters to each output channel.

Assign the parameters you set at the SFCs in the user program to the channel groups. Each output channel of SM 332; AO 4 x 12 Bit is thus assigned to a channel group, i.e. output channel 0 > channel group 0, for example.

Note

The output may carry incorrect interim values if you modify output ranges while SM 332; AO 4 x 12 Bit is in RUN.

See also

Diagnostic messages of analog output modules (Page 310)

6.14.3 Additional information on SM 332; AO 4 x 12 Bit

Unused channels

To take unused output channels of SM 332; AO 4 x 12 Bit off power, set the "disabled" argument at the "output type" parameter. Disabled channels do not have to be wired.

Line continuity check

SM 332; AO 4 x 12 Bit only performs a line continuity check at the current outputs.

In output ranges 0 mA to 20mA and ±20 mA, a "reliable" wire-break check is not possible for output values of-20s to ±200 µA.

Short-circuit test

SM 332; AO 4 x 12 Bit only performs a short-circuit test at the voltage outputs.

Substitute values

You can configure the SM 332; AO 4 x 12 Bit for CPU STOP mode as follows: Outputs off power, hold last value or set substitute values. The set substitute values must lie within the output range.

6.15 Analog output module SM 332; AO 2 x 12 Bit; (6ES7332-5HB01-0AB0)

Order number: "Standard module"

6ES7332-5HB01-0AB0

Order number: "SIPLUS S7-300 module"

6AG1332-5HB01-2AB0

Properties

- 2 outputs in one group
- The outputs can be set separately as
  - voltage output
  - current output
- Resolution 12 bits
- Programmable diagnostics and diagnostic interrupt
- Electrically isolated to backplane bus interface and load voltage
- Supports parameter reassignment in RUN

Diagnostics

For information on diagnostic messages at the "group diagnostics" parameter, refer to chapter Diagnostic messages of analog output modules (Page 310).

Terminal assignment

The diagrams below show various wiring options.

Note

When you switch the rated load voltage (L+) off and on, the outputs can return incorrect voltage/current values for the duration of about 500 ms.

Wiring: 2 and 4-wire connection for voltage output

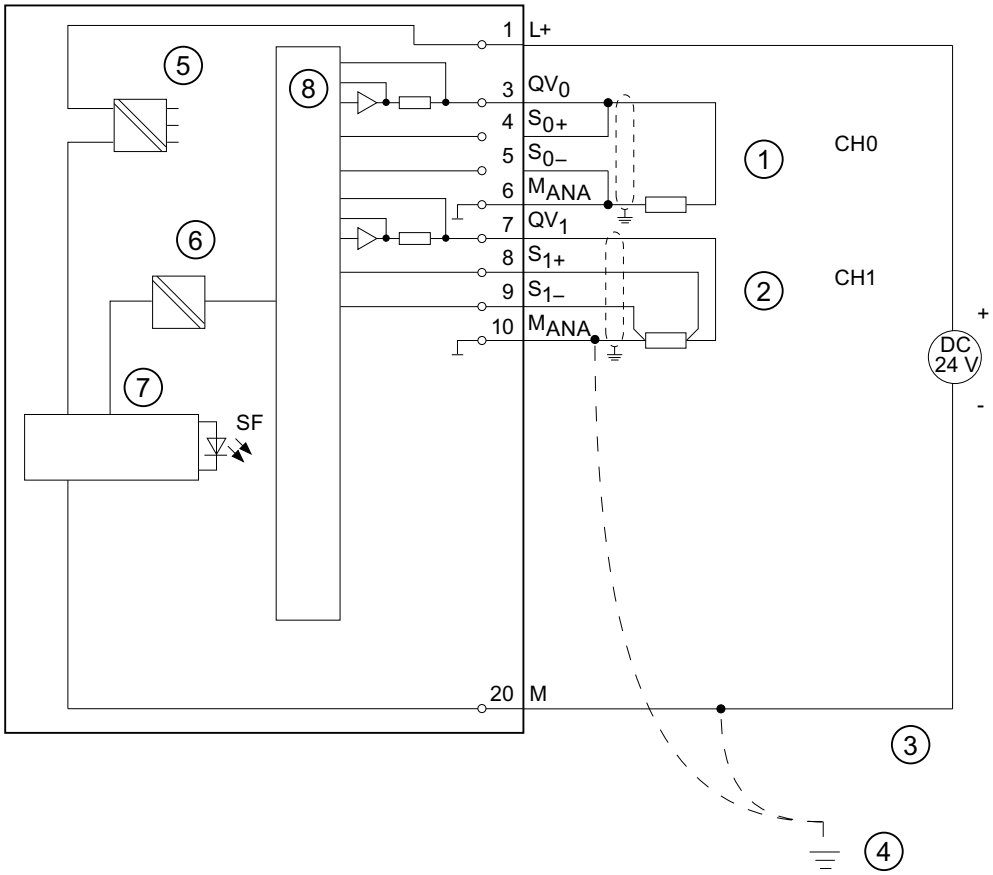

① 2-wire connection: no compensation for line impedance
② 4-wire connection: with compensation for line impedance
③ Equipotential bonding
④ Functional earthing
⑤ Internal supply
⑥ Electrical isolation
⑦ Backplane bus interface
⑧ Analog-to-Digital Converter (ADC)

Figure 6-48 Wiring and block diagrams

Wiring for current output

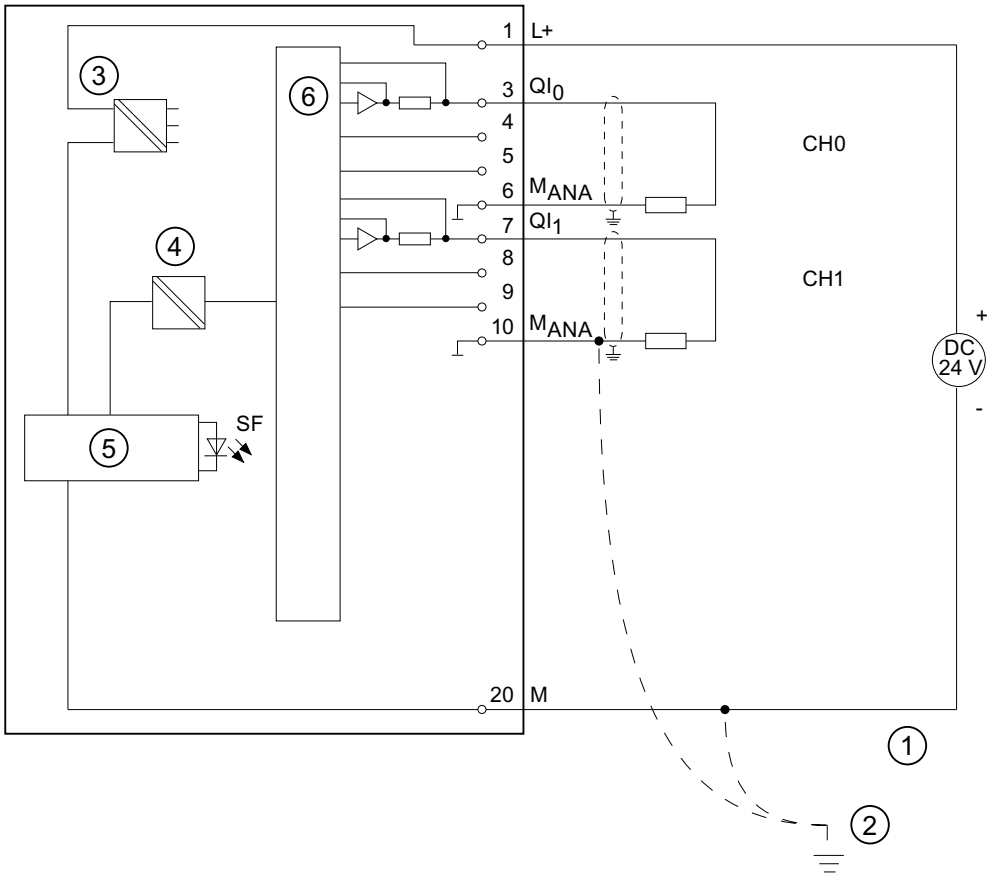

① Equipotential bonding
② Functional earthing
③ Internal supply
④ Electrical isolation
⑤ Backplane bus interface
⑥ Digital analog converter (DAC)

Figure 6-49 Wiring and block diagrams

Technical specifications

Technical specifications	
Dimensions and weight	
Dimensions W x H x D (mm)	40 x 125 x 117
Weight	Approximately 220 g
Module-specific data	
Supports parameter reassignment in RUN	Yes
Reaction of non-programmed outputs	Return the output value which was valid before the parameterization
Supports isochronous mode	no
Number of outputs	2
Cable length • shielded	 max. 200 m
Voltages, currents, electrical potentials	
Rated load voltage L+ • Reverse polarity protection	24 VDC Yes
Electrical isolation • between channels and the backplane bus • between channels and electronics power supply • between channels • between channels and load voltage L+	 Yes Yes no Yes
Maximum potential difference • between S- and M_{ANA} (CMV) • between M_{ANA} and $M_{internal}$ (V_{ISO})	 3 VDC 75 VDC / 60 VAC
Isolation test voltage	500 VDC
Current consumption • from the backplane bus • from load voltage L+ (no-load)	 max. 60 mA max. 135 mA
Power loss of the module	typ. 3 W
Generation of analog values	
Resolution (including overshoot range) • ± 10 V; ± 20 mA; • 4 mA to 20 mA; 1 V to 5 V • 0 V to 10 V; 0 mA to 20 mA	 11 bits + sign 12 bits
Conversion time (per channel)	max. 0.8 ms
Transient recovery time • with resistive load • with capacitive load • with inductive load	 0.2 ms 3.3 ms 0.5 ms (1 mH) 3.3 ms (10 mH)

Technical specifications	
Interference frequency suppression, error limits	
Crosstalk between outputs	> 40 dB
Operational limit (across entire temperature range, relative to measurement range end value in the selected output range)	
• Voltage output • Current output	± 0,5 % ± 0,6 %
Basic error limit (operational limit at 25 °C, relative to the measurement range end value in the selected output range)	
• Voltage output • Current output	± 0,4 % ± 0,5 %
Temperature error (relative to output range)	± 0.002 %/K
Linearity error (relative to output range)	± 0,05 %
Repeat accuracy (in settled state at 25 °C, relative to output range)	± 0,05 %
Output ripple; range 0 Hz to 50 kHz (relative to output range)	± 0,05 %
Status, interrupts, diagnostics	
Interrupts • Diagnostic interrupt	 programmable
Diagnostic functions • Group error display • Reading diagnostic information	programmable red LED (SF) supported
Setting substitute values	Yes, programmable
Actuator selection data	
Output ranges (rated values)	
• Voltage	± 10 V 0 V to 10 V 1 V to 5 V
• Current	± 20 mA 0 mA to 20 mA 4 mA to 20 mA
Load impedance (in the rated range of the output)	
• For voltage outputs – capacitive load	min. 1 kΩ max. 1 µF
• For current outputs – at CMV < 1 V – inductive load	max. 500 Ω max. 600 Ω max. 10 mH
Voltage output • Short-circuit protection • Short-circuit current	 Yes max. 25 mA
Current output • noload voltage	 max. 18 V

Technical specifications	
Destruction limit against external voltages/currents	
• Voltage at outputs to M_{ANA}	max. 18 V continuous; 75 V for the duration of max. 1 s (duty factor 1:20)
• Current	max. 50 mA DC
• Wiring of the actuators	using a 20-pin front connector
• for voltage output	
– 2-wire connection	supported
– 4-wire connection (measuring line)	supported
• for current output	
– 2-wire connection	supported

Reassigning parameters in RUN

If you reassign parameters in RUN, the following special characteristic applies.

SF LED is lit:

If a diagnostics was pending prior to reconfiguration, the SF LEDs (on CPU, IM or module) may be lit even though diagnostics is no longer pending and the module is operating correctly.

Solution:

- Only assign new parameters if no diagnostics is pending, or
- unplug module and plug it in again.

6.15.1 Output ranges of SM 332; AO 2 x 12 Bit

Introduction

You can configure the outputs for operation as voltage or current outputs, or disable them. You program the outputs at the "output type" parameter in *STEP 7*.

Output type "Voltage" and output range "± 10 V" are set by default at the module. You can always use this combination of output type and range without having to program the SM 332; AO 2 x 12 Bit in *STEP 7*.

Output ranges

Program the voltage and current output ranges in *STEP 7*.

Table 6- 38 Output ranges of SM 332; AO 2 x 12 Bit

Selected type of output	Output range
Voltage	1 V to 5 V 0 V to 10 V ± 10 V
Current	0 mA to 20 mA 4 mA to 20 mA ± 20 mA

6.15.2 Programmable parameters

Introduction

For general information on programming analog modules, refer to the chapter Programming analog modules (Page 307).

The table below provides an overview of configurable parameters, including defaults:

Table 6- 39 Overview of the parameters of SM 332; AO 2 x 12 Bit

Parameter	Range of values		Default	Parameter type	Scope
Enable • Diagnostic interrupt	Yes/no		No	Dynamic	Module
Diagnostics • Group diagnostics	Yes/no		No	Static	Channel
Edition • Output type • Output range	disabled Voltage Current See chapter Output ranges for SM 332; AO 2 x 12 Bit (Page 496)		V ± 10 V	dynamic	Channel
Reaction to CPU STOP	ASS HLV SSV	Outputs zero current/voltage Hold last value Set substitute value	ASS	dynamic	Channel

Assigning parameters to channels

The parameters can be set separately at each output channel of SM 332; AO 2 x 12 Bit. You can assign separate parameters to each output channel.

Assign the parameters you set at the SFCs in the user program to the channel groups. Each output channel of SM 332; AO 2 x 12 Bit is thus assigned to a channel group, i.e. output channel 0 > channel group 0, for example.

Note

The output may carry invalid interim values if you modify output ranges while SM 332; AO 2 x 12 bit is in RUN.

See also

Diagnostic messages of analog output modules (Page 310)

6.15.3 Additional information on SM 332; AO 2 x 12 Bit

Unused channels

To take unused output channels of SM 332; AO 2 x 12 Bit off power, set the "disabled" argument at the "output type" parameter. Disabled channels do not have to be wired.

Line continuity check

SM 332; AO 2 x 12 Bit only performs a line continuity check at the current outputs.

In output ranges 0 mA to 20mA and ±20 mA, a "reliable" wire-break check is not possible for output values of-20s to ±200 µA.

Short-circuit test

SM 332; AO 2 x 12 Bit only performs a short-circuit test at the voltage outputs.

Substitute values

You can configure the SM 332; AO 2 x 12 Bit for CPU STOP mode as follows: Outputs off power, hold last value or set substitute values. The set substitute values must lie within the output range.

6.16 Analog IO module SM 334; AI 4/AO 2 x 8/8 Bit; (6ES7334-0CE01-0AA0)

Order number

6ES7334-0CE01-0AA0

Properties

- 4 inputs in one group and 2 outputs in one group
- Resolution 8 bits
- Programmable measurement type at each channel group
  - Voltage
  - Current
- Not programmable, measurement and output type defined by hardwiring
- Connected to potential of the backplane bus interface
- Electrically isolated to load voltage

Terminal assignment

The diagrams below show various wiring options.

Note

Note when wiring the SM 334:

- analog ground **M_{ANA}(terminal 15 or 18) is interconnected with chassis ground M of the CPU or interface module IM.** Use a cable with a conductor cross-section of at least 1 mm^2.

  The module will shut down if the ground connection between M_{ANA} and M is missing. Inputs are read with $7FFF_H$, and outputs return a value of 0. The module may be destroyed if operated without ground over a longer period of time.
- the **supply voltage for the CPU and/or the interface module (IM) may not be connected with reversed polarity**. Reverse polarity will inevitably lead to the destruction of the module, because M_{ANA} develops an impermissible high potential (+24 V.)

Wiring: Voltage measurement and current output

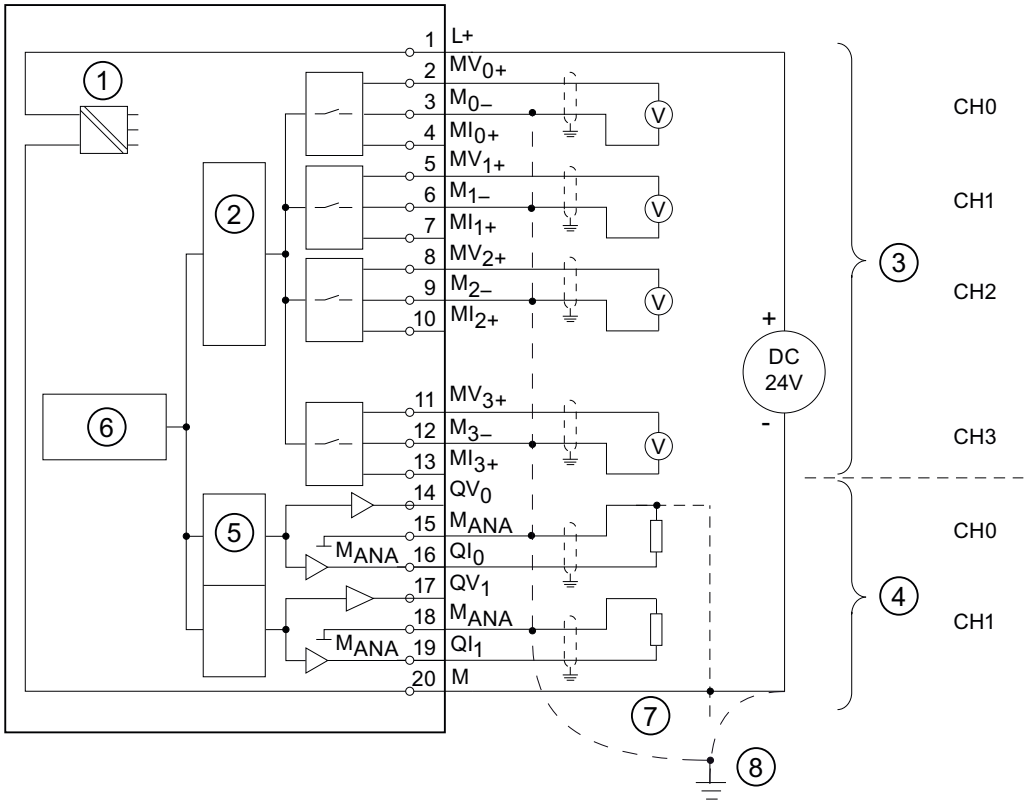

① Internal supply
② Analog-to-Digital Converter (ADC)
③ Inputs: Voltage measurement
④ Outputs: Voltage output
⑤ Digital-to-Analog Converter (DAC)
⑥ Backplane bus interface
⑦ Equipotential bonding
⑧ Functional earthing

Figure 6-50 Wiring and block diagrams

Wiring: 4-wire transducers for current measurement and voltage output

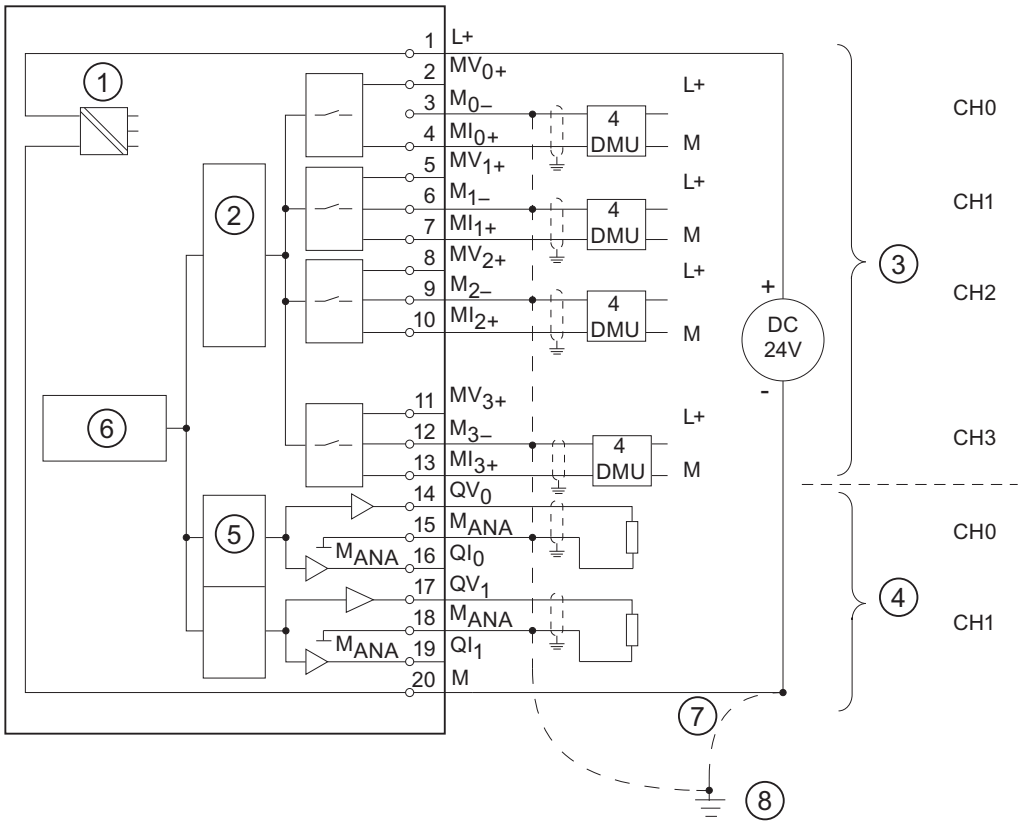

① Internal supply
② Analog-to-Digital Converter (ADC)
③ Inputs: Current measurement with 4-wire transducer
④ Outputs: Voltage output
⑤ Digital-to-Analog Converter (DAC)
⑥ Backplane bus interface
⑦ Equipotential bonding
⑧ Functional earthing

Figure 6-51 Wiring and block diagrams

Technical specifications

Technical specifications	
Dimensions and weight	
Dimensions W x H x D (mm)	40 x 125 x 117
Weight	ca. 285 g
Module-specific data	
Supports isochronous mode	no
Number of inputs	4
Number of outputs	2
Cable length • shielded	 max. 200 m
Voltages, currents, electrical potentials	
Rated supply voltage of the rated electronics and load voltage L+	24 VDC
Electrical isolation • between channels and the backplane bus • between channels and electronics power supply	 no yes
between channels	no
Maximum potential difference • between inputs and M_{ANA} (CMV) • between inputs (CMV)	 1 VDC 1 VDC
Isolation test voltage	500 VDC
Current consumption • from the backplane bus • from supply and load voltage L+ (no load)	 max. 55 mA max. 110 mA
Power loss of the module	typ. 3 W
Generation of analog input values	
Measuring principle • Resolution (including overshoot range)	Actual value conversion 8 bits
Integration/conversion time (per channel) • programmable • Integration time in µs	 no <500
Basic execution time of inputs	max. 5 ms
Time constant of the input filter	0.8 ms
Generation of analog output values	
• Resolution (including overshoot range)	8 bits
Conversion time (per channel) • programmable • Conversion time in µs	 no <500

Technical specifications	
Basic execution time of outputs	max. 5 ms
Transient recovery time • with resistive load • with capacitive load • with inductive load	 0.3 ms 3.0 ms 0.3 ms
Interference frequency suppression, error limits for inputs	
Interference frequency suppression at F = n (f1 ± 1 %) (f1 = interference frequency)	
• Common mode interference (V_{pp} < 1 V)	> 60 dB
Crosstalk between outputs	> 50 dB
Operational limit (across entire temperature range, relative to measurement range end value in the selected input range)	
• Voltage input • Current input	± 0,9 % ± 0,8 %
Basic error limit (operational limit at 25 °C, relative to measurement range end value of the selected input range)	
• Voltage input • Current input	± 0,7 % ± 0,6 %
Temperature error (relative to input range)	± 0.005 %/K
Linearity error (relative to input range)	± 0,05 %
Repeat accuracy (in transient state at 25 °C, relative to input range)	± 0,05 %
Output ripple; range 0 Hz to 50 kHz (relative to output range)	± 0,05 %
Interference frequency suppression, error limits of outputs	
Crosstalk between outputs	> 40 dB
Operational limit (across entire temperature range, relative to measurement range end value in the selected output range)	
• Voltage output • Current output	± 0,6 % ± 1,0 %
Basic error limit (operational limit at 25 °C, relative to the measurement range end value in the selected output range)	
• Voltage output • Current output	± 0,5 % ± 0,5 %
Temperature error (relative to output range)	± 0.02 %/K
Linearity error (relative to output range)	± 0,05 %
Repeat accuracy (in transient state at 25 °C, relative to output range)	± 0,05 %
Output ripple (bandwidth relative to output range)	± 0,05 %
Status, interrupts, diagnostics	
Interrupts	none
Diagnostic functions	none
Sensor selection data	
Input ranges (rated values) / input impedance • Voltage • Current	 0 V to 10 V/100 k Ω 0 mA to 20 mA/50 Ω
Maximum voltage at voltage input (destruction limit)	max. 20 V continuous; 75 V for max. duration of 1 s (duty factor 1:20)

Technical specifications	
Maximum current at current input (destruction limit)	40 mA
Wiring of the signal sensors • for voltage measurement • for current measurement as 2-wire transducer as 4-wire transducer	using a 20-pin front connector supported supported with external supply
Actuator selection data	
Output ranges (rated values) • Voltage • Current	 0 V to 10 V 0 mA to 20 mA
Load impedance (in the rated output range)	
• For voltage outputs – capacitive load • For current outputs – inductive load	min. 5 kΩ max. 1 µF max. 300 Ω max. 1 mH
Voltage output • Short-circuit protection • Short-circuit current	 yes max. 11 mA
Current output • noload voltage	 max. 15 V
Destruction limit against external voltages/currents • Voltage at outputs to MANA • Current	 max. 15 V, continuous max. 50 mA d.c.
Wiring of the actuators • for voltage output 2-wire connection 4-wire connection (measuring line)	using a 20-pin front connector supported not supported

6.16.1 SM 334; AI 4/AO 2 x 8/8 Bit - Function principle

Introduction

SM 334; AI 4/AO 2 x 8/8 bit is a non-isolated analog IO module. SM 334; AI 4/AO 2 x 8/8 Bit is not programmable.

Addressing

The I/O of the module are addressed beginning at the module start address.

The address of a channel is derived from the module start address and an address offset.

Input addresses

Valid input addresses:

Channel	Address
0	Module start address
1	Module start address + 2 bytes address offset
2	Module start address + 4 bytes address offset
3	Module start address + 6 bytes address offset

Output addresses

Valid output addresses:

Channel	Address
0	Module start address
1	Module start address + 2 bytes address offset

6.16.2 Measurement and output type of SM 334; AI 4/AO 2 x 8/8 bit

Introduction

SM 334; AI 4/AO 2 x 8/8 Bit is not programmable.

Defining the measurement and output type

Set the measurement type (voltage, current) by hardwiring the input channel.

Set the output type (voltage, current) by hardwiring the output channel.

See also

Representation of the values for analog input channels (Page 275)

Representation of analog values for analog output channels (Page 292)

6.16.3 Measurement and output ranges of SM 334; AI 4/ AO 2 x 8/8 bit

Measuring ranges

SM 334; AI 4/AO 2 x 8/8 Bit provides the 0 V to 10 V and 0 mA to 20 mA measuring ranges.

By contrast to the other analog modules, the SM 334 has a lower resolution and no negative measuring ranges. Make allowances for this feature when reading the measured value tables *Analog value representation in the ± 1 V to ± 10 V measuring ranges* and *Analog value representation in the 0 mA to 20 mA and 4 mA to 20 mA measuring ranges*.

Output ranges

SM 334; AI 4/AO 2 x 8/8 Bit provides the 0 V to 10 V and 0 mA to 20 mA output ranges.

Compared to the other analog modules, the SM 334 has a lower resolution, and its analog outputs do not have any overshoot ranges. Make allowances for this feature when reading the tables *Analog value representation in the 0 V to 10 V and 1 V to 5 V output ranges* and *Analog value representation in the 0 mA to 20 mA and 4 mA to 20 mA output ranges*.

6.16.4 Additional information on SM 334; AI 4/AO2 x 8/8 Bit

Unused channels

Always short-circuit unused input channels, and connect these to M_{ANA}. This optimizes interference immunity of the analog input module.

Leave unused output channels open.

6.17 Analog IO module SM 334; AI 4/AO 2 x 12 bit; (6ES7334-0KE00-0AB0)

Order number: "Standard module"

6ES7334-0KE00-0AB0

Order number: "SIPLUS S7-300 module"

6AG1334-0KE00-2AB0

Properties

- 4 inputs in 2 groups and 2 outputs in one group
- Resolution of 12 bits + sign
- Programmable measurement type at each channel group:
  - Voltage (not adjustable for channel 0 and channel 1)
  - Resistance
  - Temperature
- Electrically isolated to the backplane bus interface
- Electrically isolated to load voltage

Terminal assignment

The diagrams below show various wiring options.

Note

When you switch the rated load voltage supply on/off, the output may assume invalid interim values below the rated load voltage.

Wiring: Resistance measurement, voltage measurement and voltage output

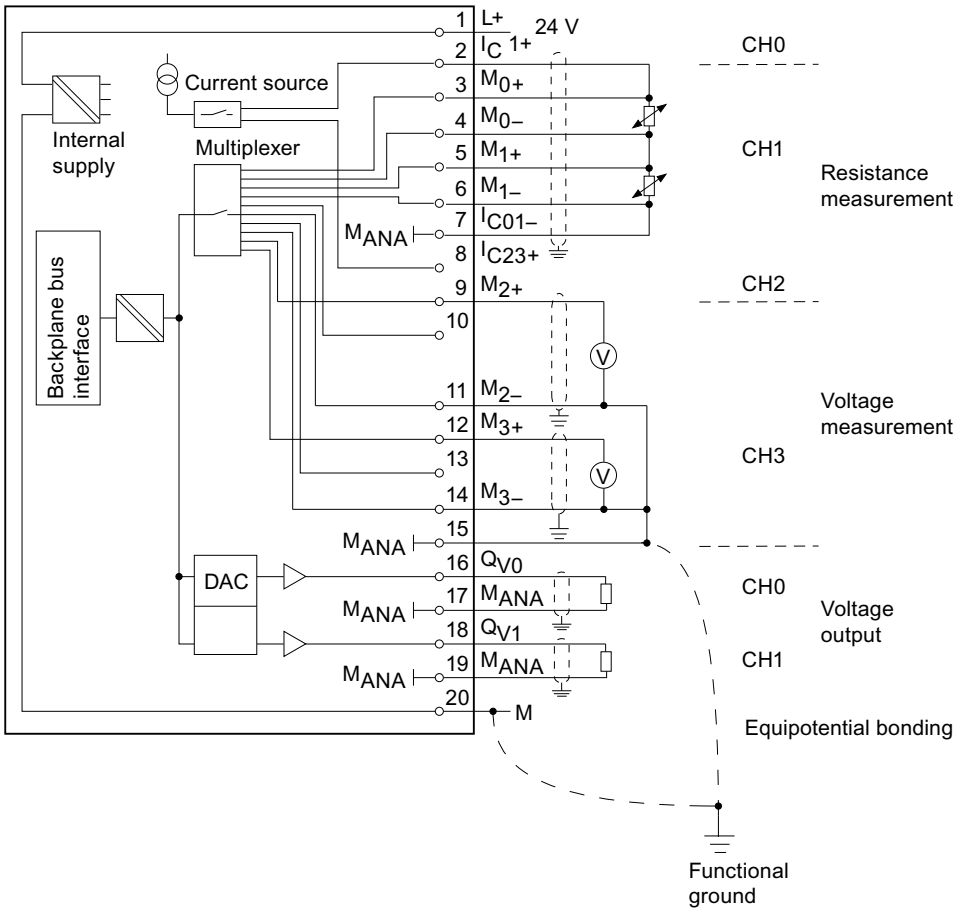

Figure 6-52 Wiring and block diagrams

Wiring: Resistance measurement and voltage output

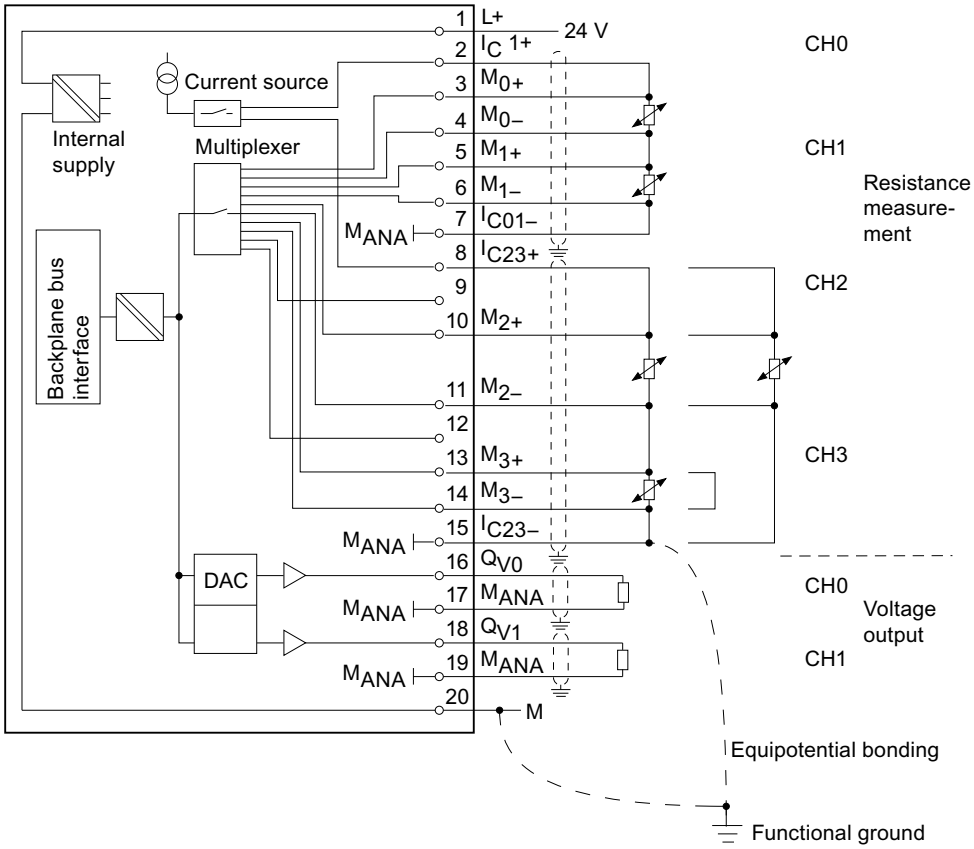

Figure 6-53 Wiring and block diagrams

Technical specifications

Technical specifications		
Dimensions and weight		
Dimensions W x H x D (mm)	40 x 125 x 117	
Weight	approx. 200 g	
Module-specific data		
Supports isochronous mode	No	
Number of inputs • with resistive transducers	4 4	
Number of outputs	2	
Shielded cable length	max. 100 m	
Voltages, currents, electrical potentials		
Supply voltage of the rated electronics and load voltage L+ • Reverse polarity protection	24 VDC Yes	
Constant measuring current for resistive transducers (pulsed) • For PT 100 • at 10 kΩ	 typ. 490 µA; from product version 06: 1.5 mA typ. 105 µA	
Electrical isolation • between channels and the backplane bus • between channels and electronics power supply	 Yes Yes	
between channels	No	
Maximum potential difference • between inputs and M_{ANA} (V_{CM}) • between inputs (V_{CM}) • between M_{ANA} and $M_{internal}$ (V_{iso})	 1 V 1 V 75 VDC / 60 VAC	
Isolation test voltage	500 VDC	
Current consumption • from the backplane bus • from supply and load voltage L+ (no load)	 max. 60 mA max. 80 mA	
Power loss of the module	typ. 2 W	
Generation of analog input values		
Measuring principle	Integrating	
Integration/conversion time (per channel)		
• programmable	Yes	
• Integration time in ms	$16^2/_3$	20
• Basic conversion time, including the integration time in ms	72	85
• Additional conversion time for resistance measurements in ms	72	85
• Resolution in bits (including overshoot range)	12 bits	12 bits

Technical specifications		
• Interference frequency suppression at interference frequency f1 in Hz	60	50
Measured value smoothing	programmable, in 2 stages	
Time constant of the input filter	0.9 ms	
Basic execution time of the module (all channels enabled)	350 ms	
Generation of analog output values		
Resolution (including overshoot range)	12 bits	
Conversion time (per channel)	500 µs	
Transient recovery time • with resistive load • with capacitive load	 0.8 ms 0.8 ms	
Interference frequency suppression, error limits for inputs		
Interference frequency suppression at F = n (f1 ± 1 %) (f1 = interference frequency)		
• Common mode interference (V_{pp} < 1 V) • Seriesmode interference (peak interference value < rated input range)	> 38 dB > 36 dB	
Crosstalk between inputs	> 88 dB	
Operational limit (across entire temperature range, relative to the measurement range end value in the selected input range)		
• Voltage input	0 V to 10 V	± 0.7 %
• Resistance input	10 kΩ	± 3.5 %
• Temperature input	Pt 100	± 1 %
Basic error limit (operational limit at 25 °C, relative to the measurement range end value in the selected input range)		
• Voltage input	0 V to 10 V	± 0.5 %
• Resistance input	10 kΩ	± 2.8 %
• Temperature input	Pt 100	± 0.8 %
Temperature error (relative to input range)	± 0.01 %/K	
Linearity error (relative to input range)	± 0.05 %	
Repeat accuracy (in settled state at 25 °C, relative to input range)	± 0.05 %	
Interference frequency suppression, error limits of outputs		
Crosstalk between outputs	> 88 dB	
Operational limit (across entire temperature range, relative to measurement range end value in the selected output range)		
• Voltage output	± 1.0 %	
Basic error limit (operational limit at 25 °C, relative to the measurement range end value in the selected output range)		
• Voltage output	± 0.85 %	
Temperature error (relative to output range)	± 0.01 %/K	
Linearity error (relative to output range)	± 0.01 %	
Repeat accuracy (in transient state at 25 °C, relative to output range)	± 0.01 %	
Output ripple; range 0 Hz to 50 kHz (relative to output range)	± 0.1 %	

Technical specifications		
Status, interrupts, diagnostics		
Interrupts	none	
Diagnostic function	none	
Sensor selection data		
Input ranges (rated values) / input impedance		
• Voltage	0 V to 10 V	100 kΩ
• Resistance	10 kΩ	10 MΩ
• Temperature	Pt 100	10 MΩ
Maximum voltage at voltage input (destruction limit)	max. 20 V continuous; 75 V for max. duration of 1 s (duty factor 1:20)	
Wiring of the signal sensors • for voltage measurement • for resistance measurement with 2-wire connection with 3-wire connection with 4-wire connection	 supported supported supported supported	
Characteristics linearization • for resistance thermometers	programmable Pt 100 (Climatic range)	
Technical unit of data formats	degrees Centigrade	
Actuator selection data		
Output range (rated value) • Voltage	 0 V to 10 V	
Load impedance (in the rated output range)		
• For voltage outputs – capacitive load	min. 2.5 kΩ * max. 1.0 µF	
Voltage output • Short-circuit protection • Short-circuit current	 Yes max. 30 mA	
Destruction limit against external voltages/currents • Voltage at outputs to MANA	 max. 15 V, continuous	
Wiring of the actuators • for voltage output 2-wire connection 4-wire connection (measuring line)	using a 20-pin front connector supported not supported	

* the error limits specified for the outputs are only valid when there is a high-ohm connection. In the entire load resistance range, an additional error of <0.9 % can result.

6.17.1 Programmable parameters

Introduction

For general information on programming analog modules, refer to the chapter Programming analog modules (Page 307).

The table below provides an overview of configurable parameters, including defaults:

Table 6- 40 Summary of parameters SM 334; AI 4/AO 2 x 12 Bit

Parameters	Range of values		Default	Parameter type	Scope
Input Measurement • Measurement type	disabled		RTD-4L		
	V R-4L RTD-4L	Voltage Resistance (4-wire connection) Thermal resistance (linear, 4-wire connection)		dynamic	Channel
• Measuring range	0 V to 10 V 10000 Ω Pt 100 Klima		Pt 100 Klima		
Output • Output type • Output range	disabled Voltage 0 V to 10 V		V 0 V to 10 V	dynamic	Channel

6.17.2 Measurement types and ranges

Introduction

You can configure the outputs for operation as voltage or current outputs, or disable these.

You can wire the outputs as voltage outputs, or disable these.

Program the outputs at the "measurement type" AND output type" parameters in *STEP 7*.

Input defaults

The "thermoelectric resistance (linear, 4-wire connection)" measurement type and "Pt 100 Klima" measuring range are set by default at the module. You can use these default settings without having to program the SM 334; AI 4/AO 2 x12 Bit in *STEP 7*.

Options of wiring the input channels

You can wire the input channels of SM 334; AI 4/AO 2 x 12 Bit in the following combinations:

Channel	Wiring versions
Channels 0 and 1	• 2 x temperature or • 2 x resistance
Channels 2 and 3	• 2 x voltage, • 2 x resistance, • 2 x temperature, • 1 x temperature and 1 x voltage, or • 1 x resistance and 1 x voltage

Note

Wiring both a temperature sensor and a resistor to channels 0 and 1 or 2 and 3 is not allowed.

Reason: Common current source for both channels.

Measuring ranges

Program the measuring ranges in *STEP 7*.

Table 6- 41 Measurement types and ranges

Selected type of measurement	Measuring range
V: Voltage	0 V to 10 V
R-4L: resistance (4-wire connection)	10 kΩ
RTD-4L: Thermoresistor (linear, 4-wire connection) (temperature measurement)	Pt 100 Klima

Output ranges of SM 334; AI 4/ AO 2 x 12 bit

The "voltage" output type and "0 V to 10 V" output range are set by default at the module. You can always use this combination of the output type and range without having to program the SM 334; AO 4 x 2 Bit in *STEP 7*.

Table 6- 42 Output ranges

Selected type of output	Output range
Voltage	0 V to 10 V

See also

Representation of analog values for analog output channels (Page 292)

6.17.3 Additional information on SM 334; AI 4/ AO 2 x 12 bit

Unused channels

Set the "disabled" value at the "measurement type" parameter for unused input channels. This setting reduces module cycle times.

Always short-circuit unused input channels, and connect these to M_{ANA}. This optimizes interference immunity of the analog input module.

To take the unused output channels of SM 334; AI 4/AO 2 x 12 Bit off power, always set "disabled" argument at the "output type" parameter, and leave the connection open.

Other signal modules 7

Signal modules

This chapter describes the technical data and properties of the S7-300 signal modules.

7.1 Module overview

Introduction

The table below summarizes the essential features of the signal modules described in this chapter. This overview supports you in selecting a module to suit your requirements.

Table 7- 1 Special signal modules: Overview of properties

Properties	Simulator module SM 374; IN/OUT 16	Dummy module DM 370	Position decoder module SM 338; POS-INPUT
Number of inputs/outputs	• max. 16 inputs or outputs	1 slot reserved for non-programmable module	• 3 inputs for absolute encoders (SSI) • 2 digital inputs for freezing encoder values
Suitable for...	Simulation of: • 16 inputs or • 16 outputs or • 8 inputs and 8 outputs	Dummy for: • Interface modules • non-programmable signal modules • modules which occupy 2 slots	Position detection using up to three absolute encoders (SSI) Encoder types: Absolute encoder (SSI), message frame length 13 bits, 21 bits or 25 bits Data formats: Gray code or binary code
Isochronous mode supported	no	no	yes
Programmable diagnostics	no	no	no
Diagnostics interrupt	no	no	programmable
Special features	Function adjustable with screwdriver	the mechanical structure and addressing of the overall configuration remains unchanged when DM 370 is replaced with a different module.	SM 338 does not support absolute encoders with a monoflop time > 64 µs

7.2 Simulator module SM 374; IN/OUT 16; (6ES7374-2XH01-0AA0)

Order number

6ES7374-2XH01-0AA0

Properties

Properties of simulator module SM 374; IN/OUT 16:

- Simulation of:
  - 16 inputs or
  - 16 outputs or
  - 8 inputs and 8 outputs (each with the same start addresses!)
- Status displays for the simulation of inputs and outputs
- Function adjustable with screwdriver

Note

Do not operate the function selection switch in RUN!

Configuration in *STEP 7*

The simulator module SM 374; IN/OUT 16 is not included in the *STEP 7* module catalog. *STEP 7* therefore does not recognize the SM 374 order number. "Simulate" the simulator module function required for your configuration as follows:

- To use the SM 374 **with 16 inputs**, define the order number of a digital input module with 16 inputs in *STEP 7*,

  for example: 6ES7321-1BH02-0AA0
- To use the SM 374 **with 16 outputs**, define the order number of a digital output module with 16 outputs in *STEP 7*,

  for example: 6ES7322-1BH01-0AA0
- To use the SM 374 **with 8 inputs and 8 outputs**, define the order number of a digital input/output module with 8 inputs and 8 outputs in *STEP 7*,

  for example: 6ES7323-1BH00-0AA0

Module view (without front panel door)

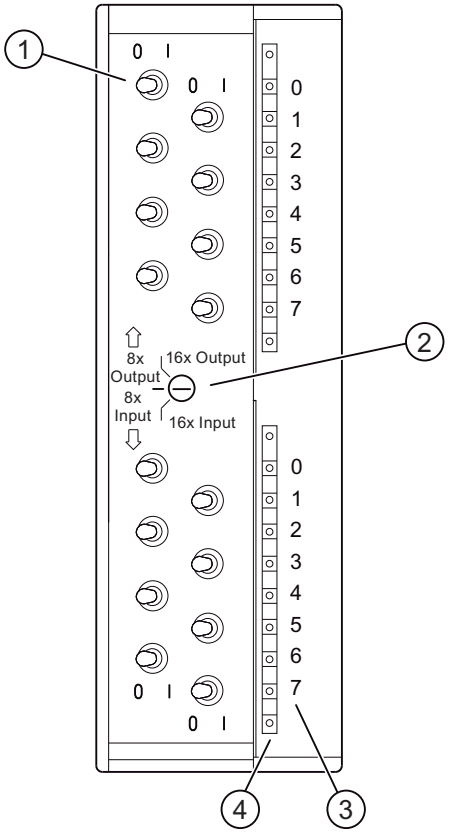

① Input status selector switch
② Function selector switch
③ Channel number
④ Status displays - green

Technical data of SM 374; IN/OUT 16

Technical data	
Dimensions and weight	
Dimensions W x H x D (mm)	40 x 125 x 110
Weight	approx. 190 g
Module-specific data	
Optional simulation of	16 inputs 16 outputs 8 inputs and 8 outputs
Voltages, currents, electrical potentials	
Current consumption from the backplane bus	max. 80 mA
Power loss of the module	typ. 0.35 W
Status, interrupts, diagnostics	
Status display	yes, green LED for each channel
Interrupts	no
Diagnostics functions	no

7.3 Dummy module DM 370; (6ES7370-0AA01-0AA0)

Order number

6ES7 370-0AA01-0AA0

Properties

The dummy module DM 370 reserves a slot for a non-configured module. It can be used as dummy module for:

- Interface modules (without reservation of address space)
- Non-configured signal modules (with reservation of address space)
- Modules which occupy 2 slots (with reservation of address space)

When replacing the dummy module with another S7-300 module, the mechanical assembly and address assignment/addressing of the entire configuration remain unchanged.

Configuration in *STEP 7*

Configure the DM 370 dummy module in *STEP 7* only if you module for a programmed signal module. If the module reserves the slot for an interface module, you can discard module configuration in *STEP 7*.

Modules which occupy 2 slots

Install two dummy modules for modules which occupy 2 slots. You only reserve the address space using the dummy module in slot "x", rather than the dummy module in slot "x + 1". For details of the procedure, see the table below.

The rack can receive up to 8 modules (SM/FM/CP.) When using two dummy modules to reserve a slot for a module of 80 mm width, you may still install 7 further modules (SM/FM/CP) because the dummy module only uses the address space for one module.

Module view

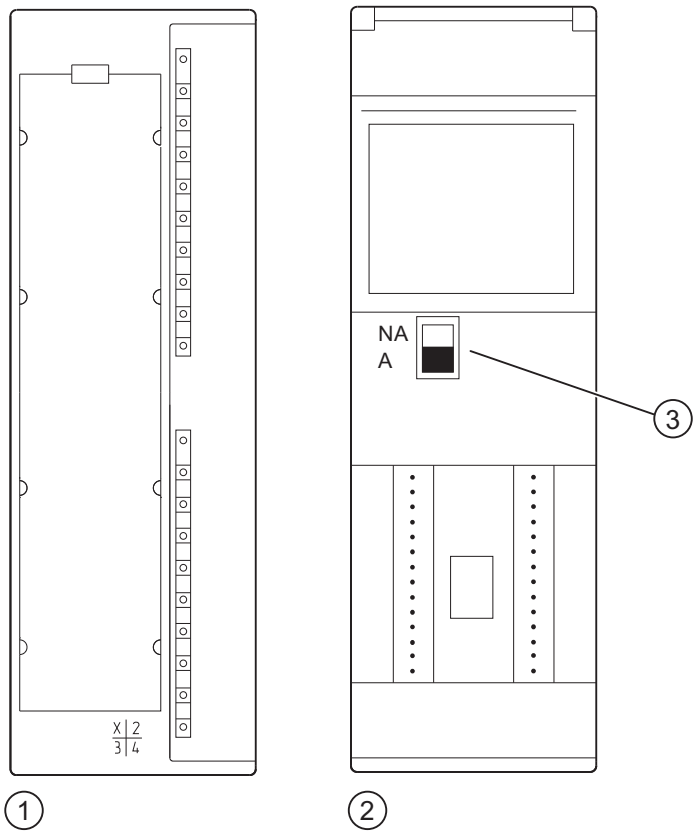

① Front view
② Rear view
③ Address selector switch

Switch settings for addressing

The table below shows how to set the switch on the rear panel of the module, according to the module type.

Table 7- 2 Meaning of the switch settings of dummy module DM 370

Switch setting	Meaning	Use
NA A	The dummy module reserves one slot. The module will not be configured, and does not use any address space.	• Without active backplane bus: For configurations where a single slot is physically reserved, with electrical connection to the S7-300 bus. • With active backplane bus: no
NA A	The dummy module reserves one slot. The module must be configured and occupies 1 byte in the input address space (system default: not in the process image.)	For configurations where an addressed slot is reserved.

Technical data of DM 370

Technical data	
Dimensions and weight	
Dimensions W x H x D (mm)	40 x 125 x 120
Weight	approx. 180 g
Voltages, currents, electrical potentials	
Current consumption from the backplane bus	approx. 5 mA
Power loss	typ. 0.03 W

7.4 Position decoder module SM 338; POS-INPUT; (6ES7338-4BC01-0AB0)

Order number

6ES7 338-4BC01-0AB0

Properties

Properties of position decoder module SM 338; POS-INPUT:

- 3 inputs for the connection of up to three absolute value encoders (SSI), and 2 digital inputs to freeze encoder values
- Allows direct reaction to encoder values in motion systems
- Processing of encoder values recorded by SM 338 in the user program
- Supports isochronous mode
- Selectable encoder value acquisition mode:
  - cyclic
  - isochronous
- Rated input voltage 24 VDC
- Nonisolated to the CPU
- Fast Mode selectable; with faster transducer action and compressed feedback interface. The Fast Mode is available from firmware version V2.0.0 in SM 338; POS-INPUT and can be selected from STEP 7 V5.3+SP2.

Supported encoder types

Encoder types supported by SM 338; POS-INPUT:

- Absolute value encoder (SSI), frame length 13 bit
- Absolute value encoder (SSI), frame length 21 bit
- Absolute value encoder (SSI), frame length 25 bit

Supported data formats

SM 338; POS-INPUT supports gray code and binary code.

Firmware update

To extend functions and for troubleshooting, it is possible with the help of STEP 7 HW-Config to load firmware updates in the operating system memory of the SM 338; POS-INPUT.

Note

When you boot the firmware update, the old firmware is deleted. If the firmware update is interrupted or terminated for some reason, thereafter the SM 338; POS-INPUT ceases to function properly. Reboot the firmware update and wait until this has completed successfully.

Note

The firmware update is only possible in remote operation if the header assembly (slave circuit) employed supports the system services required for this.

7.4.1 Isochronous mode

Note

For basic information on isochronous mode, refer to the *SIMATIC; isochronous mode* function manual.

Hardware requirements

To operate SM 338 in isochronous mode, you need:

- a CPU which supports isochronous mode
- a DP master which supports the constant bus cycle
- a slave interface (IM 153-x) which supports isochronous mode

Properties

SM 338 operates in non-isochronous or isochronous mode, depending on system parameters.

In isochronous mode, data are exchanged between the DP master and SM 338 in synchronism to the PROFIBUS DP cycle.

In isochronous mode, all 16 bytes of the feedback interface are consistent.

If synchronism is lost due to disturbance or failure/delay of Global Control (GC), the SM 338 resumes isochronous mode at the next cycle without error reaction.

If synchronism is lost, the feedback interface is not updated.

7.4.2 Wiring and block diagrams

Wiring and block diagrams

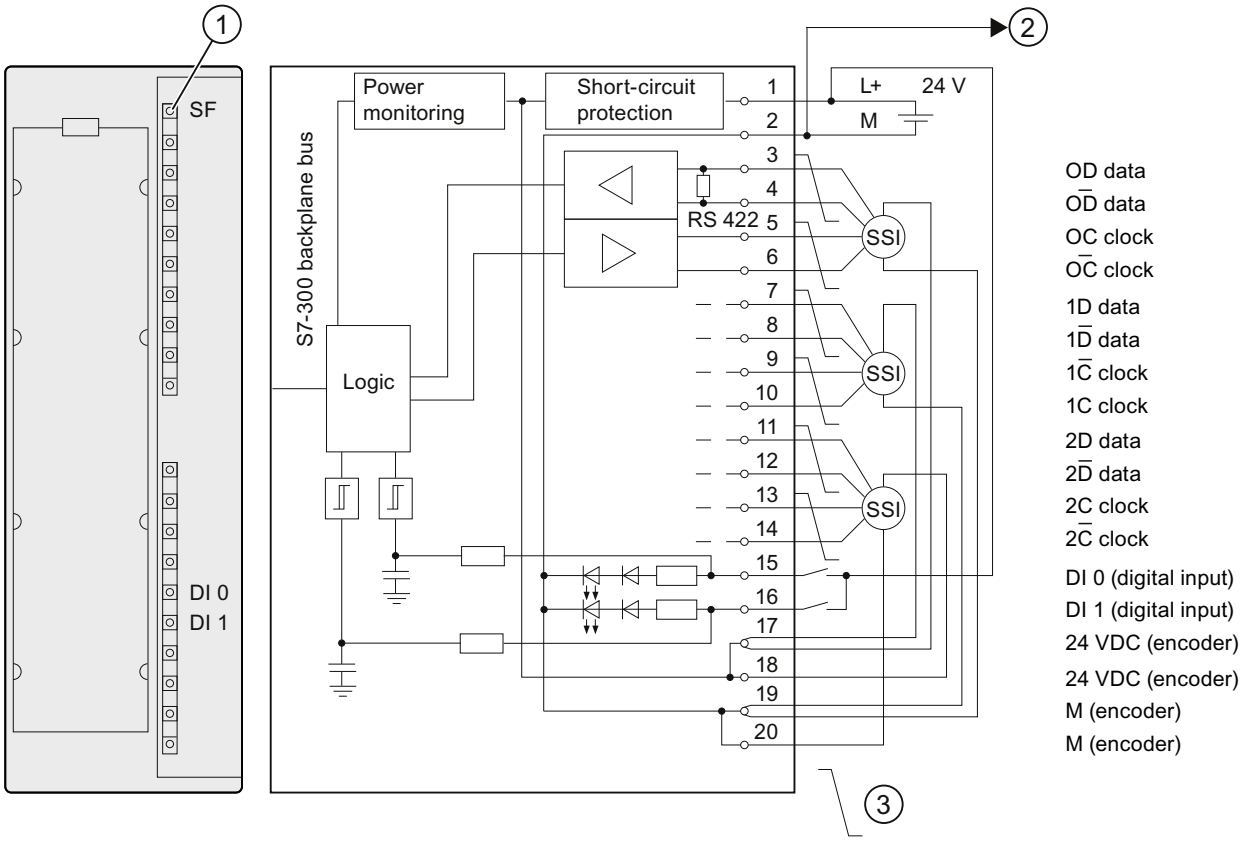

① Error LED - red
② Connection to CPU ground
③ Twisted-pair cables

Wiring rules

Important rules to observe wiring the module:

- Ground of the encoder supply is connected to CPU ground potential. Thus, establish a low impedance connection between pin 2 of SM 338 (M) and CPU ground.
- Always use shielded twisted-pair cable to wire encoder signals (pins 3 to 14.) Connect both ends of the shielding.

  Use the shield connection element to terminate the shielding on SM 338 (order number 6ES7390-5AA00-0AA0).
- Connect an external power supply if the maximum output current (900 mA) of the encoder supply is exceeded.

7.4.3 Functions of SM 338; POS-INPUT; encoder value acquisition

7.4.3.1 Encoder value acquisition

The absolute value encoder transfers its values in frames to the SM 338. The SM 338 initiates the frame transfer.

- In non-isochronous mode, the encoder values are acquired cyclically.
- In isochronous mode, the encoder values are acquired in synchronism with the PROFIBUS DP cycle at each T_i.

Cyclic encoder value acquisition

The SM 338 always initiates a frame transfer at the end of the programmed monoflop time.

Asynchronously to these cyclic frames, the SM 338 processes the acquired encoder values cyclically, based on its refresh rate (refer to the chapter "Technical data of SM 338; POS-INPUT (Page 537)").

Thus, cyclic acquisition returns encoder values of different ages. The difference between the min./max. age represents the jitter (refer to the chapter "Technical data of SM 338; POS-INPUT (Page 537)".)

Isochronous encoder value acquisition

Isochronous encoder values acquisition is automatically set when the DP master system operates with active constant bus cycle, and the DP slave is in synchronism with the DP cycle.

SM 338 initiates a frame transfer in each
PROFIBUS DP cycle, at the time T_i.

The SM 338 processes the transferred encoder values in synchronism with the PROFIBUS DP cycle.

7.4.3.2 Gray code/binary code converter

When Gray code is set, the Gray code value returned by the absolute value encoder is converted into binary code. When binary code is set, the values returned by the encoder remain unchanged.

Note

When you set Gray code, the SM 338 always converts the entire encoder value (13, 21, 25 bits). As a result, any leading special bits will influence the encoder value, and the appended bits may be corrupted.

7.4.3.3 Transferred encoder value and scaling

The transferred encoder value contains the encoder position of the absolute value encoder. In addition to the encoder position, the encoder transfers additional bits located before and after the encoder position, depending on the encoder used.

The SM 338 determines the encoder position based on the following settings:

- Scaling, places (0..12), or
- scaling, steps / revolution

Scaling, places

Scaling determines the position of the encoder value at the feedback interface.

- "Places" = 1, 2....12 indicates that appended irrelevant bits in the encoder value are shifted out, and the encoder value is right-aligned in the address area (see the example below.)
- "Places" = 0 determines that appended bits are retained and available for evaluation. This may be useful when the absolute value encoder used transfers information in the appended bits (see manufacturer specifications) which you want to evaluate. Refer also to chapter "Gray code/binary code converter (Page 527)".

Steps per revolution parameter

Up to 13 bits are available for the steps per revolution parameter. The resultant number of steps per revolution is displayed automatically according to the "Places" setting.

Example of encoder value scaling

You are using a single-turn encoder with
2^9 steps = 512 steps per revolution (resolution/360°.)

Your configuration in *STEP 7*:

- Absolute encoder: 13 bits
- Scaling: 4 places
- Steps per revolution: 512

Prior to normalizing: cyclically measured encoder value 100

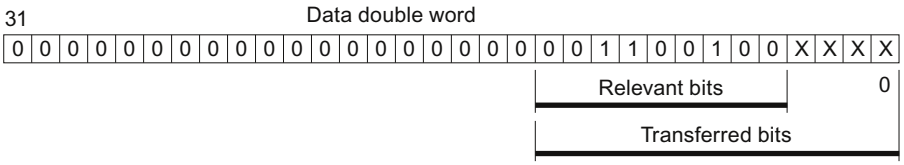

After normalizing: Encoder value 100

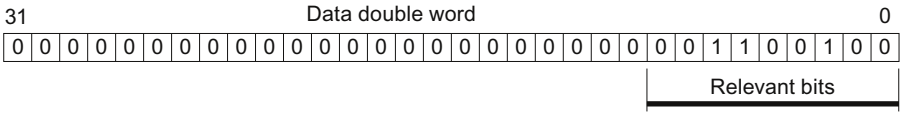

Result: bits 0 to 3 (4 digits, marked with "x") were omitted.

7.4.3.4 Freeze function

The freeze function "freezes" the actual encoder values of SM 338. The freeze function is coupled to the digital inputs DI 0 and DI 1 of SM 338.

The freeze function is triggered by a signal transition (positive edge) a DI 0 or DI 1. Bit 31 = 1 (output address) identifies a frozen encoder value. You can freeze one, two or three encoder values using one digital input.

Enable the freeze function by setting the corresponding parameters in *STEP 7* .

To allows their event-triggered evaluation, the encoder values are retained until the freeze function is terminated.

Terminating the freeze function

The freeze function must be terminated separately at each encoder input. You acknowledge the function in the user program by using STEP 7 operation T PAB to set bit 0, 1 or 2 to "xyz" according to the channel (Program example: refer to chapter "Auto-Hotspot").

The acknowledgement resets bit 31 of the corresponding encoder value, and initiates a refresh of the encoder values. You can freeze the encoder values again after you cleared the ACK bit at the output address of the module.

In isochronous mode, the acknowledgement is processed at the time T_o. From this point on, you can freeze the encoder values again by setting the digital inputs.

Note

The Freeze function is acknowledged automatically when you assign new parameters with different arguments to the relevant channel (refer to chapter "Auto-Hotspot").
If the parameter are identical the Freeze function remains unaffected.

7.4.4 Parametrization SM 338 POS-INPUT

You parameterize the SM 338; POS-INPUT in *STEP 7.* Always parameterize the module while the CPU is in STOP mode.

After you completed the parameter assignment, download the parameters from the PG to the CPU. At its next STOP → RUN transition, the CPU transfers the parameters to the SM 338.

New parameters can not be assigned by the user program.

Parameters of SM 338; POS-INPUT

The table below provides an overview of configurable parameters and defaults for the SM 338.

The defaults apply if you have not set any parameters in *STEP 7* (default setting bold).

Table 7- 3 Parameters of SM 338; POS-INPUT

Parameters	Range of values	Note
Enable • Fast-Mode	yes / **no**	Enable parameter. Applies to all 3 channels.
Enable • Diagnostic interrupt	yes / **no**	Enable parameter. Applies to all 3 channels.
Absolute value encoder (SSI) [1]	none; **13 bits**; 21 bits; 25 bits	none: The encoder input is switched off.
Code type [1]	**Gray**; Binary	Code returned by the encoder.
Baud rate [1,3]	**125 kHz**; 250 kHz; 500 kHz; 1 MHz	Data transfer rate of the SSI position detection. Observe the relationship between cable lengths and the transmission rate (refer to chapter "Technical data of SM 338; POS-INPUT (Page 537)")
Monoflop time [1,2,3]	16 µs; 32 µs; 48 µs; **64 µs**	The monoflop time represents the minimum interval between two SSI frames. The configured monoflop time must be greater than the monoflop time of the absolute value encoder.
Scaling • Places • Steps per revolution [4]	 **0** to 12 2 to **8192**	Scaling right-aligns the encoder value in the address space; irrelevant places are discarded.
Enabling the Freeze function	**off**; 0; 1	Definition of the digital input that initiates freezing of the encoder value at the positive edge.

[1] Refer to the technical specifications of the absolute value encoder

[2] The monoflop time represents the interval between two SSI frames. The configured monoflop time must be greater than the monoflop time of the absolute value encoder (see the technical data of the manufacturer). The time 2 x (1 / transmission rate) is added to the value set in HW Config. A transmission rate of 125 kHz and configured monoflop time of 16 µs sets an effective monoflop time of 32 µs.

[3] Restriction of the monoflop time of the absolute value encoder:
(1 / transmission rate) < monoflop time of the absolute value encoder < 64 µs + 2 x (1 / transmission rate)

[4] to powers of two

Note

Please note that in asynchronous mode, the transmission rate and monoflop time affect the accuracy and update quality of the encoder values. In isochronous mode, the transmission rate and monoflop time have an influence on the accuracy of the freeze function.

7.4.5 Addressing SM 338 POS-INPUT

Data areas for encoder values

The SM 338 inputs and outputs are addressed beginning at the module start address. The input and output address is determined in your configuration of SM 338 in *STEP 7*.

Input addresses

Table 7- 4 SM 338; POS-INPUT: Input addresses

Encoder input	Input address (derived from configuration) + address offset
0	"Module start address"
1	"Module start address" + 4 byte address offset
2	"Module start address" +8 byte address offset

Structure of double data word in Standard Mode

Double data word structure of the encoder inputs:

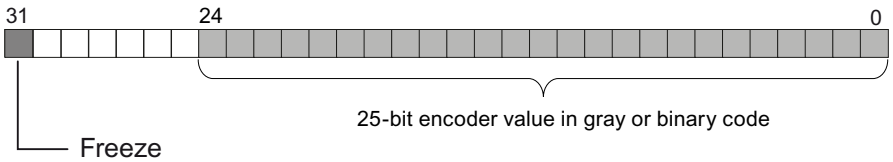

0 = Encoder value is not frozen. The value is continuously updated.
1 = Encoder value is frozen. The value remains constant until acknowledgement.

Structure of double data word in Fast Mode

Double data word structure of the encoder inputs:

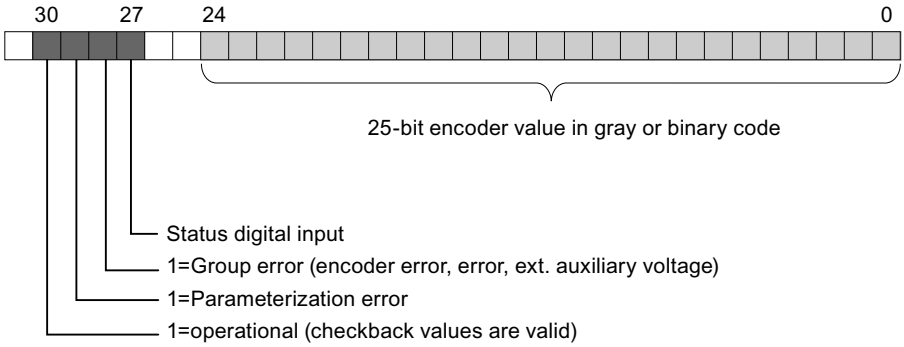

In the double data word from channel 0, the status of digital input I0 is reported to bit 27 (digital input status) and the double data word from channel 1 is reported to digital input I1.

In the double data word from channel 2, the bit is always = 0.

Output address in Standard Mode

no output data are supported in Fast Mode.

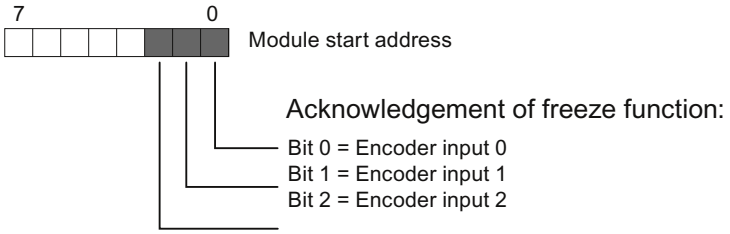

Reading data areas

You can read the data areas in your user program using the *STEP 7* operation L PED "xyz."

Example of access to encoder values and use of the freeze function

You want to read and evaluate the values at the encoder inputs. The module start address is 256.

STL			Explanation
L	PED	256	// Read encoder value in the address area for encoder input 0
T	MD	100	// Save encoder value to memory double word
A	M	100.7	// Freeze state for subsequent acknowledgement
=	M	99.0	// Determine and save
L	PED	230	// Read encoder value in the address area for encoder input 1
T	MD	104	// Save encoder value to memory double word
A	M	104.7	// Freeze state for subsequent acknowledgement
=	M	99.1	// Determine and save
L	PED	264	// Read encoder value in the address area for encoder input 2
T	MD	108	// Save encoder value to memory double word
A	M	108.7	// Freeze state for subsequent acknowledgement
=	M	99.2	// determine and save
L	MB	99	// Load freeze state and
T	POB	256	// acknowledge (SM 338: output address 256)

You can then process the encoder values from the bit memory address areas MD 100, MD 104 and MD 108. The encoder value is set in bits 0 to 30 of the memory double word.

7.4.6 Diagnostics of SM 338; POS-INPUT

Introduction

The SM 338 provides diagnostics messages, i.e. it always provides all diagnostics messages without user intervention.

Reactions to a diagnostic message in *STEP 7*

Actions initiated by diagnostic messages:

- The diagnostic message is entered in the diagnosis of the module and forwarded to the CPU.
- The SF LED on the module is lit.
- If you have set "Enable Diagnostic Interrupt" in *STEP 7*, the system triggers a diagnostic interrupt and calls OB 82.

Reading diagnostic messages

You can read detailed diagnostic messages using SFCs in the user program (refer to section Diagnostics data of SM 338; POS-INPUT (Page 622)).

You can view the cause of the error in the module diagnostics data in *STEP 7* (refer to the *STEP 7* Online Help.)

Diagnostic message using the SF LED

The SM 338 indicates errors at its SF LED (group error LED.) The
SF LED lights up when the SM 338 generates a diagnostic message. It goes dark after all error states are cleared.

The SF LED also lights up to indicate external errors (short-circuit at the encoder supply), regardless of the CPU operating state (at POWER ON.)

The SF LED lights up temporarily at startup, during the self test of SM 338.

Diagnostic messages of SM338; POS-INPUT

The table below provides an overview of the diagnostic messages of SM 338; POS-INPUT.

Table 7- 5 Diagnostic messages of SM 338; POS INPUT

Diagnostic message	LED	Scope of diagnostics
Module error	SF	Module
Internal error	SF	Module
External error	SF	Module
Channel error	SF	Module
External auxiliary voltage missing	SF	Module
Module not programmed	SF	Module
Incorrect parameters	SF	Module
Channel information available	SF	Module
Watchdog time-out	SF	Module
Channel error	SF	Channel (encoder input)
Configuration / programming error	SF	Channel (encoder input)
External channel error (encoder error)	SF	Channel (encoder input)

Causes of error and troubleshooting

Table 7- 6 Diagnostic messages of SM 338, causes of error and troubleshooting

Diagnostic message	Possible cause of error	To correct or avoid error
Module error	Any, the module has detected an error.	
Internal error	Module has detected an error within the automation system.	
External error	Module has detected an error outside of the automation system.	
Channel error	Indicates that only specific channels are faulty.	
External auxiliary voltage missing	Supply voltage L+ of the module is missing	Feed supply L+
Module not programmed	Module requires information whether it should operate with default system parameters or user parameters.	Message present after power on, until the CPU has completed the transfer of parameters; configure the module as required.
Incorrect parameters	One parameter, or the combination of parameters, is not plausible	Program the module
Channel information available	Channel error; module can provide additional channel information.	
Watchdog time-out	Infrequent high electromagnetic interference	Eliminate interference
Channel error	Any, the module has detected an error at the encoder input.	
Configuration / programming error	Illegal parameter transferred to module	Program the module
External channel error (encoder error)	Wire-break at encoder cable, encoder cable not connected, or encoder defective.	Check connected encoder

7.4.7 SM 338; POS INPUT - Interrupts

Introduction

This chapter describes the interrupt reaction of SM 338; POS-INPUT. The SM 338 can trigger diagnostic interrupts.

For detailed information on the OBs and SFCs mentioned below, refer to the *STEP 7* Online Help.

Enabling interrupts

There is no default interrupt setting, i.e. interrupts are disabled if not set accordingly. You configure the interrupt enable parameter in *STEP 7* (refer to chapter "Parametrization SM 338 POS-INPUT (Page 530)").

Diagnostic interrupt

If you have enabled diagnostic interrupts, the incoming error events (initial occurrence of the error) and outgoing error events (message after troubleshooting) are reported by means of interrupts.

The CPU interrupts user program execution, and executes diagnostic interrupt OB82.

You can call SFC 51 or 59 in OB82 in the user program to view detailed diagnostic data output by the module.

Diagnostics data remain consistent until the program exits OB 82. The module acknowledges the diagnostic interrupt when the program exits OB82.

7.4.8 Technical data of SM 338; POS-INPUT

Technical data of SM 338; POS-INPUT

Technical data			
Dimensions and weight			
Dimensions W x H x D (mm)	40 x 125 x 120		
Weight	Approx. 235 g		
Voltages, currents, electrical potentials			
Rated load voltage L+ • Range • Reverse polarity protection	24 VDC 20.4 ... 28.8 V No		
Electrical isolation	No, only to shield		
Maximum potential difference • Between the input (M terminal) and CPU grounding busbar	1 VDC		
Encoder supply • Output voltage • Output current	L+ -0.8 V Max. 900 mA, short circuit-proof		
Current consumption • from the backplane bus • from load voltage L+ (no load)	Max. 160 mA max. 10 mA		
Power loss of the module	Typ. 3 W		
Encoder inputs POS-INPUT 0 to 2			
Position detection	Absolute		
Difference signals for SSI data and SSI clock	To RS422 standard		
Data transfer rate and cable (twisted-pair and shielded) length of absolute value encoders	• 125 kHz max. 320 m • 250 kHz max. 160 m • 500 kHz max. 60 m • 1 MHz max. 20 m		
SSI frame transfer rate • 125 kHz • 250 kHz • 500 kHz • 1 MHz	13 bits 112 µs 56 µs 28 µs 14 µs	21 bits 176 µs 88 µs 44 µs 22 µs	25 bits 208 µs 104 µs 52 µs 26 µs
Monoflop time[2]	16 µs, 32 µs, 48 µs, 64 µs		

Technical data	
Digital inputs DI 0, DI 1	
Electrical isolation	No, only to shield
Input voltage	0 signal -3 V ... 5 V 1 signal 11 V ... 30.2 V
Input current	0 signal ≤ 2 mA (standby current) 1 signal 9 mA (typ.)
Input delay	0 > 1: max. 300 µs 1 > 0: Max. 300 µs
Maximum repetition rate	1 kHz
Connection of a two-wire BEROS, type 2	Supported
Shielded cable length	600 m
Unshielded cable length	32 m
Status, interrupts, diagnostics	
Interrupts • Diagnostics interrupt	 programmable
Status display for digital inputs Group error	LED (green) LED (red)
Inaccuracy of the encoder value	
Free-running transducer capture (Standard Mode)	
• maximum age [1] • minimum age [1] • Jitter	(2 × frame transfer rate) + monoflop time + 580 µs Frame transfer rate + 130 µs Frame transfer rate + monoflop time + 450 µs
Refresh rate	Frame evaluation at intervals of 450 µs
Free-running transducer capture (Fast Mode)	
• maximum age [1] • minimum age [1] • Jitter	(2 × frame transfer rate) + monoflop time + 400 µs Frame transfer rate + 100 µs Frame transfer rate + monoflop time + 360 µs
Refresh rate	Frame evaluation at intervals of 360 µs
Isochronous encoder value acquisition	
• Age	Encoder value at time T_i of the current PROFIBUS DP cycle
Inaccuracy of the frozen encoder value (Freeze)	
Cyclic encoder value acquisition (Standard Mode)	
• maximum age [1] • minimum age [1] • Jitter	(2 × frame transfer rate) + monoflop time + 580 µs Frame transfer rate + 130 µs Frame transfer rate + monoflop time + 450 µs
Isochronous encoder value acquisition	
• Jitter	Max. (frame transfer rate $_n$ + programmed Monoflop time $_n$) =0, 1, 2, (channel)

Technical data		
Isochronous times for the module		
In Standard Mode	TCI TCO ToiMin TDPMin	850 µs 620 µs 90 µs 1620 µs
In Fast Mode	TCI TCO ToiMin TDPMin	700 µs 0 µs 0 µs 900 µs

[1] Age of the encoder values determined by the transfer process and the processing

[2] Restriction of the monoflop time of the absolute value encoder:
(1 / transmission rate) < monoflop of the absolute value encoder < 64 µs + 2 x (1 / transmission rate)

Interface modules 8

Interface modules

This chapter described the technical data and properties of the S7-300 interface modules.

8.1 Module overview

Introduction

The table below summarizes the essential features of the interface modules described in this chapter. This overview supports you in selecting a module to suit your requirements.

Table 8- 1 Interface modules: Overview of properties

Properties	Interface module IM 360	Interface module IM 361	Interface module IM 365
Suitable for installation in S7-300 racks	• 0	• 1 to 3	• 0 and 1
Data transfer	• from IM 360 to IM 361 via connecting cable 386	• from IM 360 to IM 361, or from IM 361 to IM 361, via connecting cable 386	• from IM 365 to IM 365 via connecting cable 386
Distance between...	• max. 10 m	• max. 10 m	• 1 m, permanently connected
Special features	---	---	• Preassembled module pair • Rack 1 supports only signal modules • IM 365 does not route the communication bus to rack 1

8.2 Interface module IM 360; (6ES7360-3AA01-0AA0)

Order number

6ES7360-3AA01-0AA0

Properties

Special features of interface module IM 360:

- Interface for rack 0 of the S7-300
- Data transfer from IM 360 to IM 361 via connecting cable 368
- Maximum distance between IM 360 and IM 361 is 10 m

Status and error LEDs

Interface module IM 360 is equipped with the following status and error LEDs.

Display element	Meaning	Explanations
SF	Group error	The LED lights up if • the connecting cable is missing. • IM 361 is switched off.

Front view

The figure below shows the front view of interface module IM 360

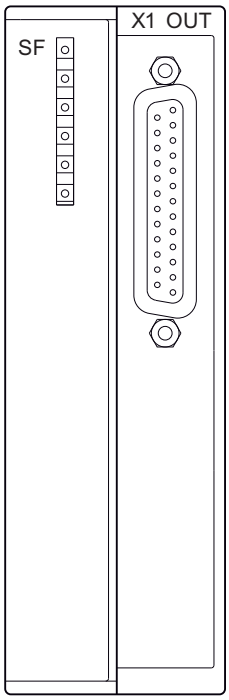

Technical data

The overview below shows the technical data of interface module IM 360.

Technical data	
Dimensions and weight	
Dimensions W x H x D (mm)	40 x 125 x 120
Weight	approx. 250 g
Module-specific data	
Cable length • Maximum length to next IM	10 m
Current consumption • from the backplane bus	350 mA
Power loss	typ. 2 W
Status and error LEDs	yes

8.3 Interface module IM 361; (6ES7361-3CA01-0AA0)

Order number

6ES7361-3CA01-0AA0

Properties

Special features of interface module IM 361:

- 24 VDC power supply
- Interface for racks 1 to 3 of the S7-300
- Current output via the S7-300 backplane bus: max. 0.8 A
- Data transfer from IM 360 to IM 361, or from IM 361 to IM 361 via connecting cable 368
- Maximum distance between IM 360 and IM 361 is 10 m
- Maximum distance between IM 361 and IM 361 is 10 m

Status and error LEDs

Interface module IM 361 is equipped with the following status and error LEDs.

Display element	Meaning	Explanations
SF	Group error	The LED lights up if • the connecting cable is missing • the IM 361 connected in series is switched off • the CPU is in POWER OFF state
5 VDC	5 VDC supply for the S7-300 backplane bus	-

Front view

The figure below shows the front view of interface module IM 361

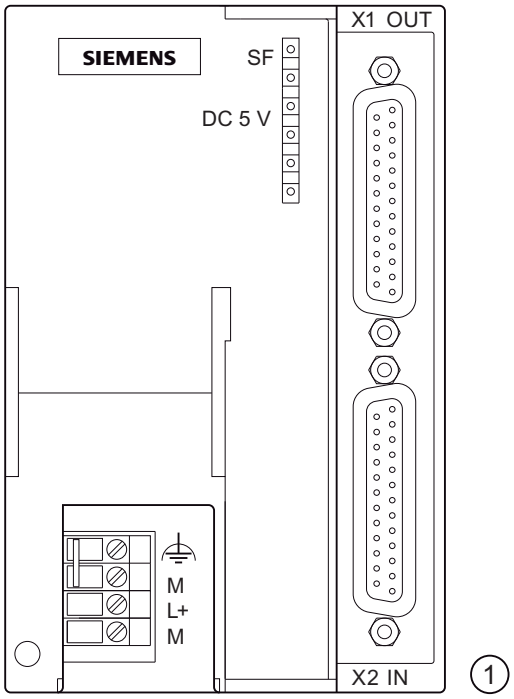

① Front view

Technical data

The overview below shows the technical data of interface module IM 361.

Technical data	
Dimensions and weight	
Dimensions W x H x D (mm)	80 x 125 x 120
Weight	505 g
Module-specific data	
Cable length Maximum length to next IM	 10 m
Current consumption from 24 VDC Power loss	 0.5 A typ. 5 W
Current sinking at backplane bus	0.8 A
Status and error LEDs	yes

See also

Spare parts and accessories for S7-300 modules (Page 643)

8.4 Interface module IM 365; (6ES7365-0BA01-0AA0)

Order number: "Standard module"

6ES7365-0BA01-0AA0

Order number: "SIPLUS S7-300 module"

6AG1365-0BA01-2AA0

Properties

Special features of interface module IM 365:

- Preassembled pair of modules for rack 0 and rack 1
- Total power supply of 1.2 A, of which up to 0.8 A may be used per rack.
- Connecting cable with a length of 1 m already permanently connected
- IM 365 does **not** route the communication bus to rack 1, i.e. you cannot install FMs with communication bus function in rack 1.

Front view

The figure below shows the front view of interface module IM 365

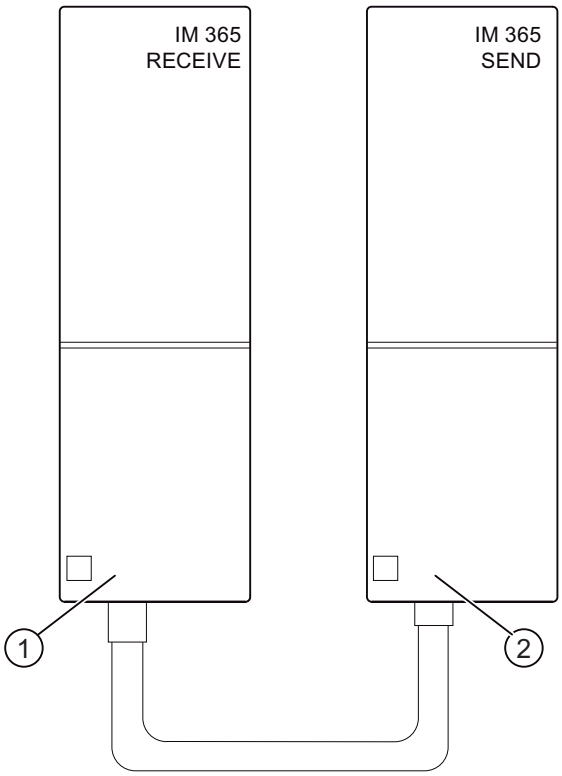

① In rack 1
② In rack 0

Technical specifications

The overview below shows the technical data of interface module IM 365.

Technical data	
Dimensions and weight	
Dimensions W x H x D (mm) per module	40 x 125 x 120
Total weight	580 g
Module-specific data	
Cable length Maximum length to next IM	 1 m
Current consumption from the backplane bus Power loss	 100 mA typ. 0.5 W
Current sinking per module	max. 1.2 A 0.8 A
Status and error LEDs	no

Parameter sets of signal modules A

A.1 Principles of programming signal modules in the user program

Parameter assignment in the user program

You have programmed the modules in *STEP 7*.

In the user program, you can use a SFC:

- to assign new parameters to the module, and
- transfer the parameters from the CPU to the addressed signal module

Parameters are stored in data records

The signal module parameters are written to data records 0 and 1; for certain analog input modules, these are also written to data record 128.

Editable parameters

You can edit the parameters of data record 1, and then transfer these to the signal module using SFC55. The CPU parameters are not changed by this action!

You cannot modify any parameters of data record 0 in the user program.

SFCs for programming

SFCs available for programming signal modules in the user program:

Table A- 1 SFCs for programming signal modules

SFC no.	Identifier	Application
55	WR_PARM	Transfer the programmable parameters (data record 1 and 28) to the addressed signal module.
56	WR_DPARM	Transfer the parameters (data record 0, 1 **or** 128) from the CPU to the addressed signal module.
57	PARM_MOD	Transfer all parameters (data record 0, 1 **and** 128) from the CPU to the addressed signal module.

Description of the parameters

The next chapters describe all modifiable parameters of the various module classes. For information on signal module parameters, refer to:

- the *STEP 7* Online Help
- to this Reference Manual

  The chapters dealing with the various signal modules also show you the corresponding configurable parameters.

Further references

For detailed information on programming signal modules in the user program and on corresponding SFCs, refer to the *STEP 7* manuals.

A.2 Parameters of digital IO modules

Parameter

The table below lists the parameters you can set for digital input modules.

Note

For details on parameters of programmable digital IO modules, see the chapter dealing with the relevant module.

The comparison illustrates the parameters you can edit:

- in *STEP 7*
- using SFC55 "WR_PARM"
- using SFB53 "WRREC" (for GSD, for example).

Parameters set in *STEP 7* may also be transferred to the module using SFCs 56 and 57, and SFB53 (refer to the *STEP 7*) Online Help).

Table A- 2 Parameters of digital IO modules

Parameters	Data record number	Programmable, using ...	
		... SFC55, SFB53	... PG
Input delay	0	no	yes
Diagnostics of missing encoder supply		no	yes
Wire-break diagnostics		no	yes
Hardware interrupt enable	1	yes	yes
Diagnostics interrupt enable		yes	yes
Hardware interrupt at positive edge		yes	yes
Hardware interrupt at negative edge		yes	yes

Note

To enable diagnostics interrupts in the user program at data record 1, you first need to enable diagnostics at data record 0 in *STEP 7*.

Structure of data record 1

The figure below shows the structure of data record 1 for the parameters of digital input modules.

You enable a parameter by setting a logical "1" at the corresponding bit.

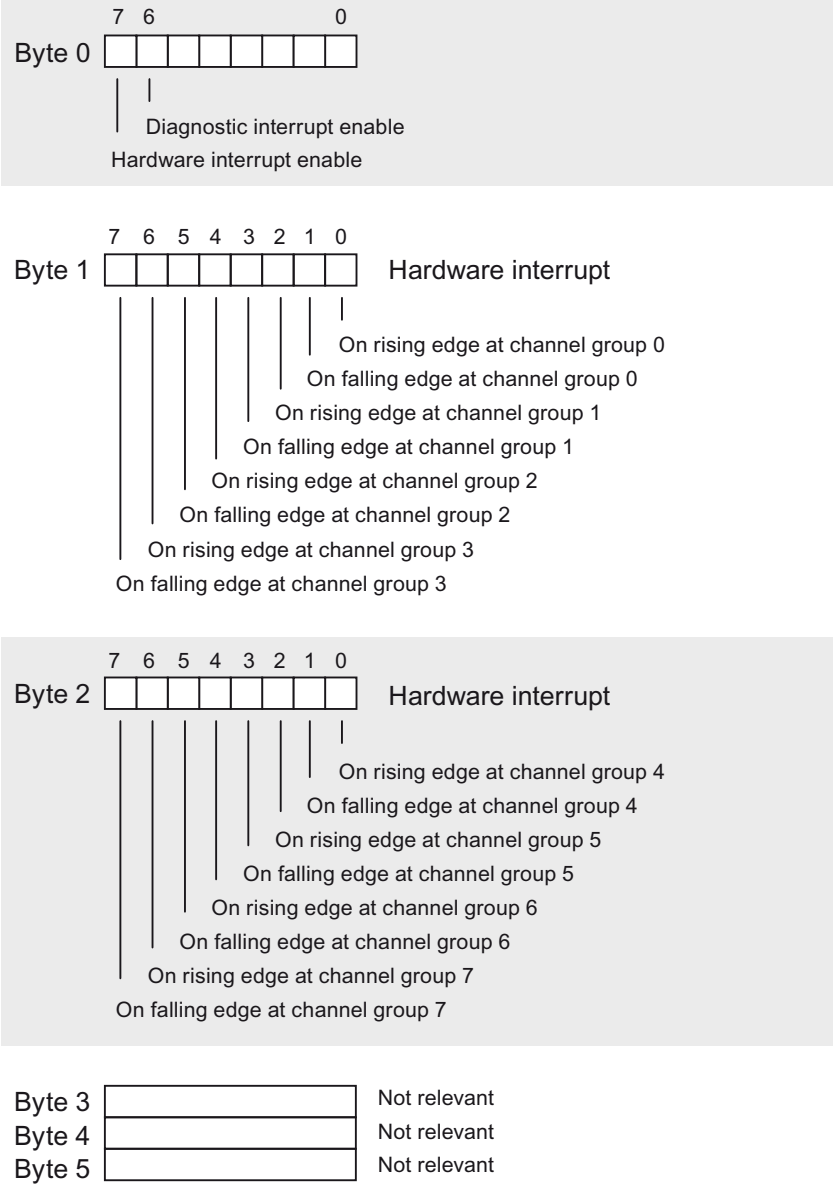

Figure A-1 Data record 1 for parameters of digital input modules

See also

Diagnostics of digital modules (Page 60)

A.3 Parameters of the digital input module SM 321; DI 16 x DC 24/125 V

Parameters

The table below lists the parameters you can set for digital input modules.

Note

For details on parameters of programmable digital IO modules, see the chapter dealing with the relevant module.

The comparison illustrates the parameters you can edit:

- in *STEP 7*
- using SFC55 "WR_PARM"
- using SFB53 "WRREC" (for GSD, for example).

Parameters set in *STEP 7* may also be transferred to the module using SFCs 56 and 57, and SFB53 (refer to the *STEP 7*) Online Help).

Table A- 3 Parameters of the digital input module SM 321; DI 16 x DC 24/125 V

Parameters	Data record number	Programmable, using ...	
		... SFC55, SFB53	... PG
Input delay	0	No	Yes
Wire-break diagnostics		No	Yes
Hardware interrupt enable	1	Yes	Yes
Diagnostic interrupt enable		Yes	Yes
Hardware interrupt at positive edge		Yes	Yes
Hardware interrupt at negative edge		Yes	Yes

Note

To enable diagnostic interrupts in the user program at data record 1, you first need to enable diagnostics at data record 0 in *STEP 7*.

Structure of data record 1

The figure below shows the structure of data record 1 for the parameters of digital input modules.

You enable a parameter by setting a logical "1" at the corresponding bit.

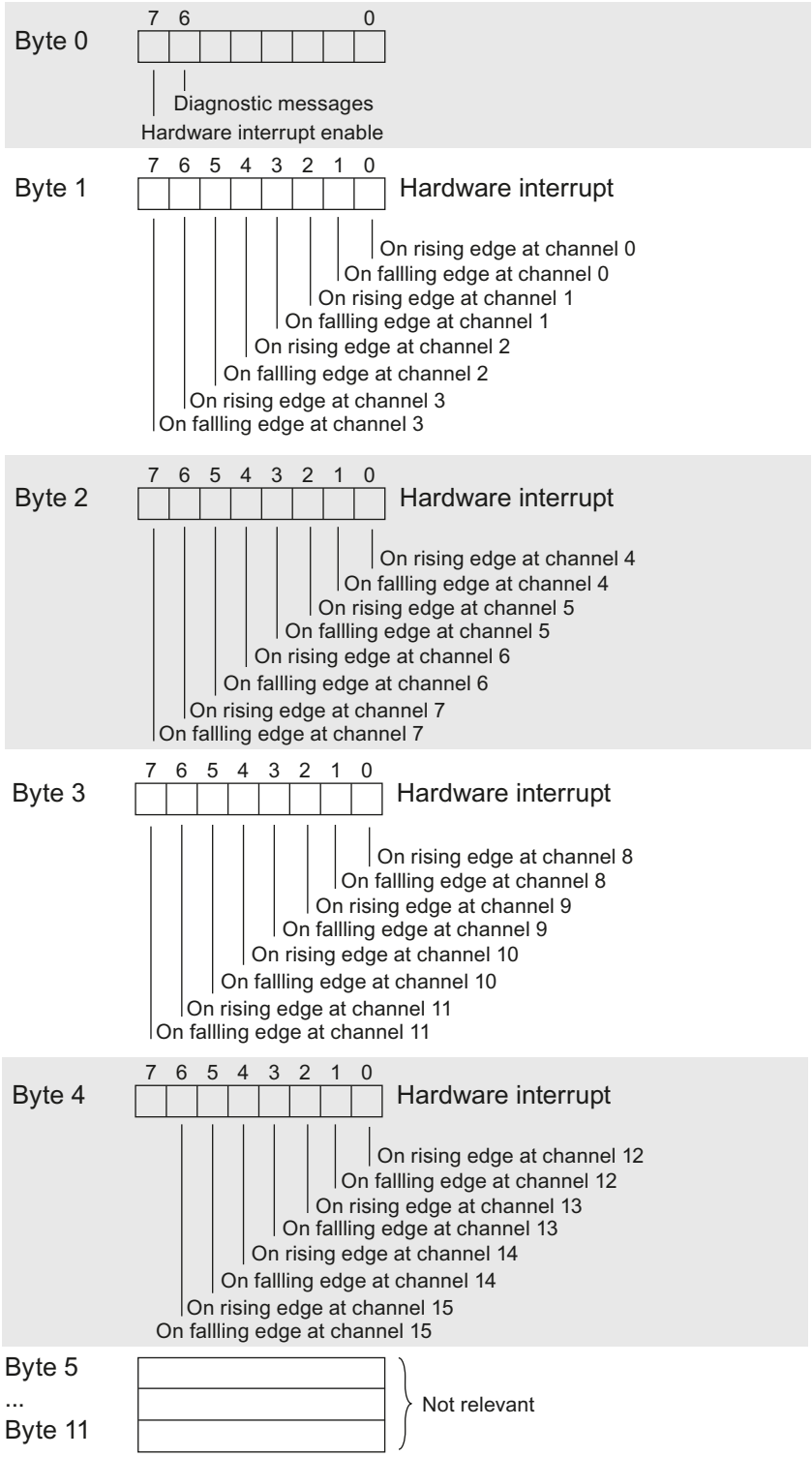

Figure A-2 Data record 1 for parameters of digital input modules

A.4 Parameters of digital output modules

Parameter

The table below contains all parameters you can set for digital output modules.

Note

For details on the parameters of programmable digital IO modules, see the chapter dealing with the relevant module.

The comparison illustrates the parameters you can edit:

- in *STEP 7*
- using SFC55 "WR_PARM"
- using SFB53 "WRREC" (for GSD, for example).

Parameters set in *STEP 7* may also be transferred to the module using SFCs 56 and 57, and SFB 53 (refer to the *STEP 7* Online Help).

Table A- 4 Parameters of digital output modules

Parameter	Data record number	Programmable, using ...	
		... SFC55, SFB53	... PG
Diagnostics of missing load voltage L+	0	no	yes
Wire-break diagnostics		No	Yes
Diagnostics of short-circuit to M		No	Yes
Diagnosis of short-circuit to L+		No	Yes
Diagnostics interrupt enable	1	Yes	Yes
Reaction to CPU STOP		Yes	Yes
Set substitute value "1"		Yes	Yes

Note

To enable diagnostic interrupts in the user program at data record 1, you first need to enable diagnostics at data record 0 in *STEP 7*.

Structure of data record 1

The figure below shows the structure of data record 1 for the parameters of digital output modules.

You enable a parameter by setting a logic "1" at the corresponding bit of byte 0.

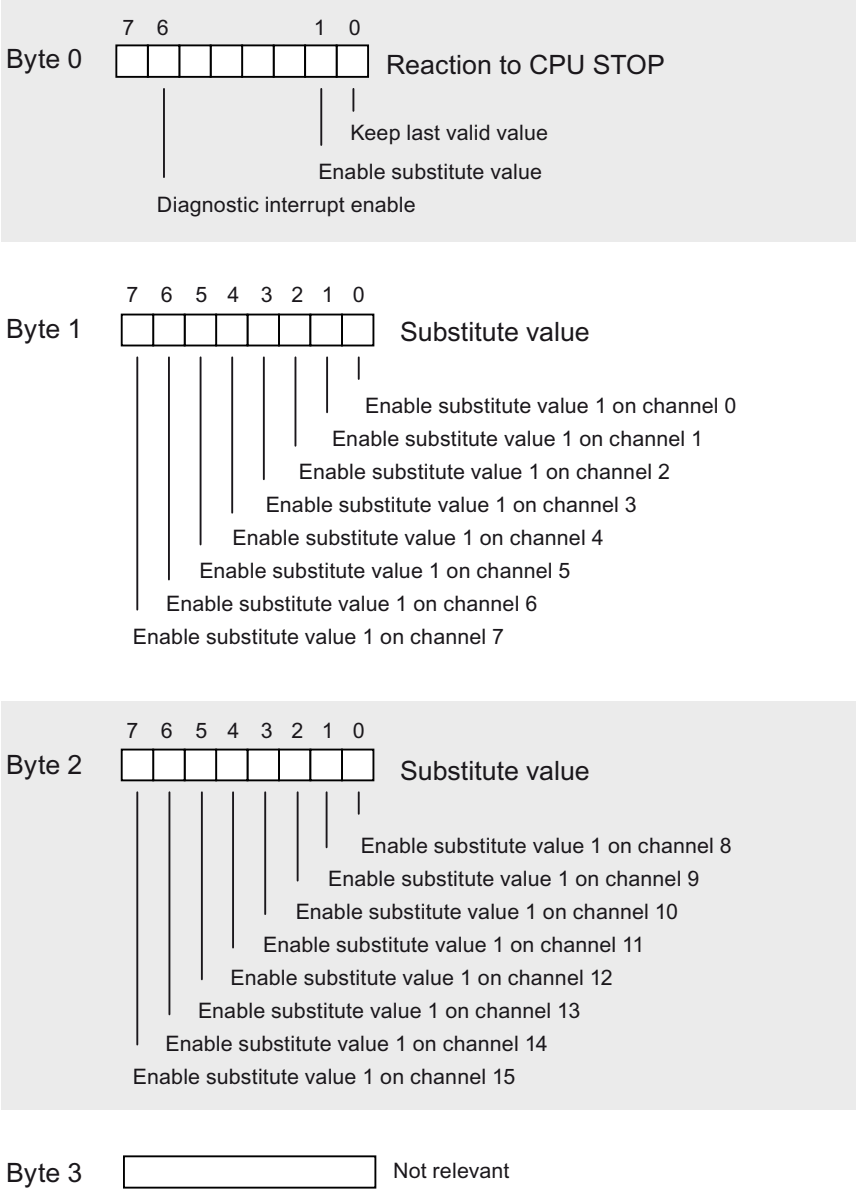

Figure A-3 Data record 1 for parameters of digital output modules

---

Note

The "hold last valid value" and "set substitute value" parameters should only be enabled at byte 0 as an alternative.

A.5 Settings from the digital output module SM 322; DO 16 x DC 24 V/0.5 A (6ES7322-8BH10-0AB0)

Parameter

The table below contains all parameters you can set for digital output modules.

The comparison illustrates the parameters you can edit:

- in *STEP 7*
- using SFC55 "WR_PARM"
- using SFB53 "WRREC" (for GSD, for example).

Parameters set in *STEP 7* can also be transferred to the module using SFC 56 and SFC 57 (refer to the *STEP 7* Online Help).

Table A- 5 Digital output module SM 322; 6ES7322-8HB10-0AB0

Parameter	Data record number	Programmable, using ...	
		... SFC55, SFB53	... PG
Diagnostics: Group diagnostics	1	Yes	Yes
Diagnostics: Load voltage L+ missing			
Diagnostics: Discrepancy error			
Diagnostics interrupt enable			
Behavior at CPU/master STOP			
Substitute a value			

Structure of data record 1

The figure below shows the structure of data record 1 for the parameters of digital output modules.

You enable a parameter by setting a logic "1" at the corresponding bit of byte 0.

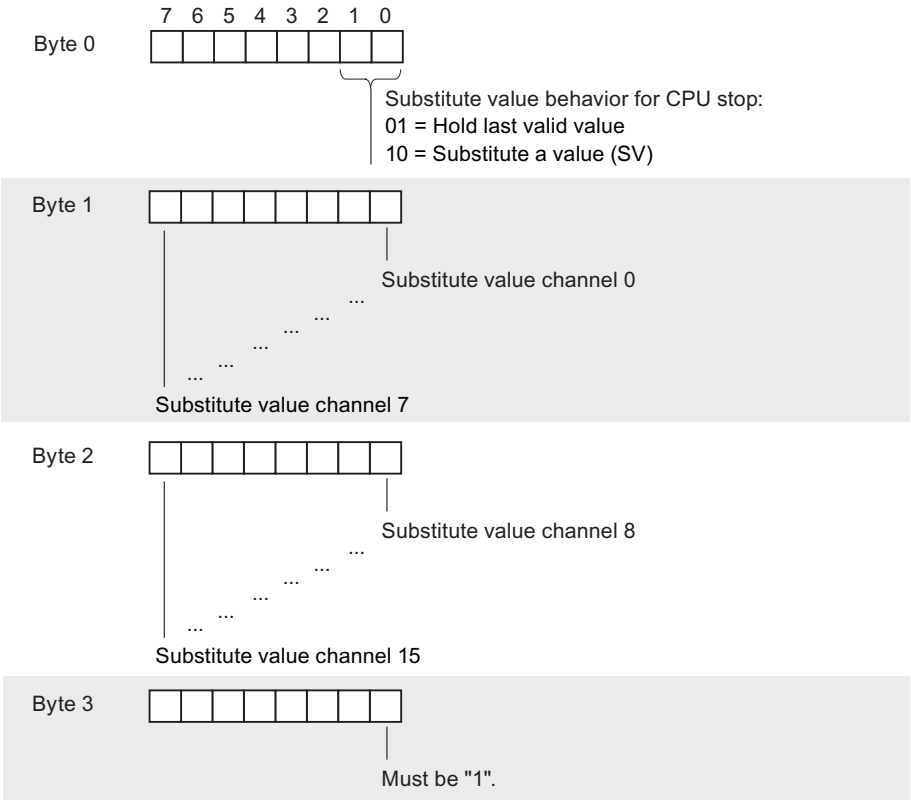

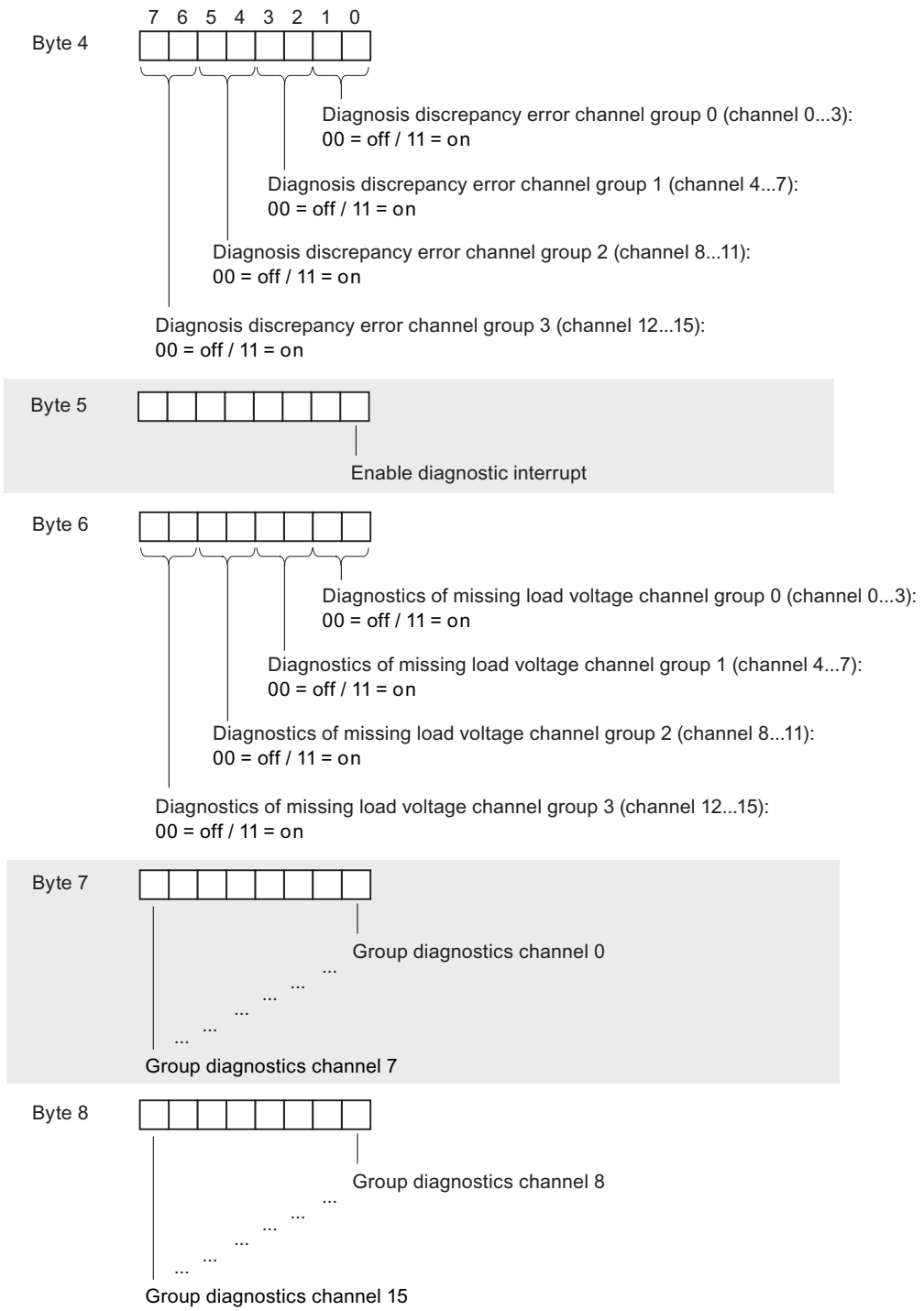

Figure A-4 Structure of data record 1

Note

The "hold last valid value" and "set substitute value" parameters should only be enabled at byte 0 as an alternative.

See also

Parameters of digital output modules (Page 160)

A.6 Parameters of analog input modules

Parameter

The table below lists all parameters you can set for analog input modules.

The comparison illustrates the parameters you can edit:

- in *STEP 7*
- using SFC55 "WR_PARM"

Parameters set in *STEP 7* can also be transferred to the module using SFC56 and SFC57 (refer to the *STEP 7* manuals).

Table A- 6 Parameters of analog input modules

Parameters	Data record number	Programmable, using ...	
		... SFC55	... PG
Diagnostics: Group diagnostics	0	No	Yes
Diagnostics: with wirebreak monitoring		no	yes
Temperature unit		no	yes
Temperature coefficient		no	yes
Smoothing		no	yes
Diagnostic interrupt enable	1	yes	yes
Hardware interrupt when limit exceeded		yes	yes
End of cycle interrupt enable		yes	yes
Interference frequency suppression		yes	yes
Measurement type		yes	yes
Measuring range		yes	yes
High limit		yes	yes
Low limit		yes	yes

Note

To enable diagnostic interrupts in the user program at data record 1, you first need to enable diagnostics at data record 0 in *STEP 7*.

Structure of data record 1

The figure below shows the structure of data record 1 of the parameters for an analog input module with 8 channels in 4 groups (e.g. AI 8 x 12 bits). The structure of a module whose channels are not grouped together is documented in the relevant module description.

You enable a parameter by setting a logic "1" at the corresponding bit of byte 0.

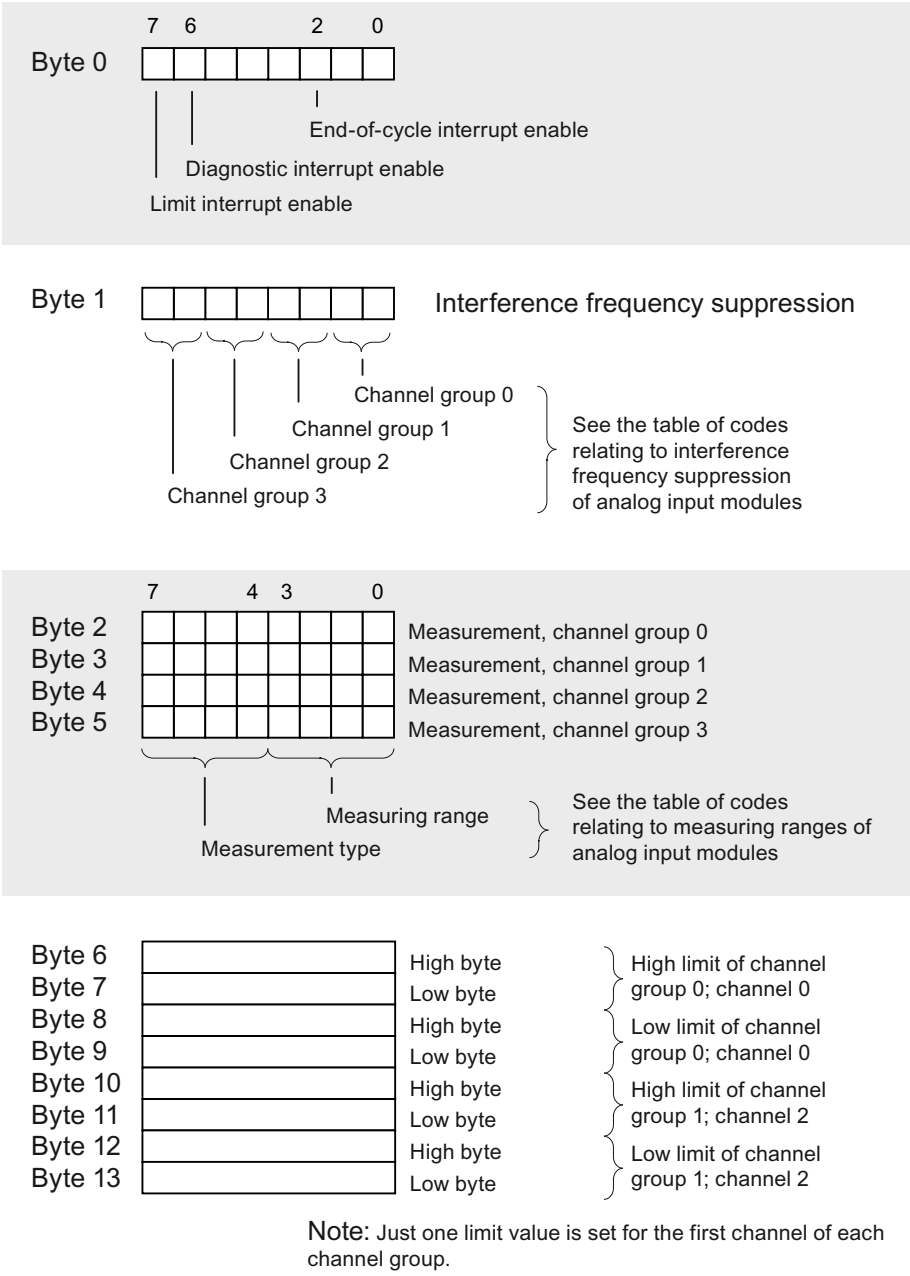

Figure A-5 Data record 1 for the parameters of analog input modules

Note

The representation of limits matches the analog value representation (see chapter 4.) Observe range limits when setting the limit values.

Interference frequency suppression

The table below contains the coding at byte 1 of data record 1 for the various frequencies (see the previous figure.) Make allowances for the resultant integration time at each channel!

Table A- 7 Interference frequency suppression codes of analog input modules

Interference frequency suppression	Integration time	Code
400 Hz	2.5 ms	2#00
60 Hz	16.7 ms	2#01
50 Hz	20 ms	2#10
10 Hz	100 ms	2#11

Measurement types and measuring ranges

The table below shows all measurement types and measuring ranges of the analog input module, including their codes. Enter these codes at bytes 2 to 5 in data record 1 (refer to the previous figure.)

Note

You may have to reposition a measuring range module of the analog input module to suit the measuring range.

Table A- 8 Measuring range codes of analog input modules

Measurement type	Code	Measuring range	Code
disabled	2#0000	disabled	2#0000
Voltage	2#0001	± 80 mV	2#0001
		± 250 mV	2#0010
		± 500 mV	2#0011
		± 1 V	2#0100
		± 2.5 V	2#0101
		± 5 V	2#0110
		1 V to 5 V	2#0111
		0 V to 10 V	2#1000
		± 10 V	2#1001
		± 25 mV	2#1010
		± 50 mV	2#1011

Measurement type	Code	Measuring range	Code
4-wire transducer	2#0010	±3.2 mA	2#0000
		±10 mA	2#0001
		0 to 20 mA	2#0010
		4 to 20 mA	2#0011
		±20 mA	2#0100
		±5 mA	2#0101
2-wire transducer	2#0011	4 to 20 mA	2#0011
Resistance (4-wire connection)	2#0100	150 Ω	2#0010
		300 Ω	2#0100
		600 Ω	2#0110
		10 k Ω	2#1001
Resistance 4-wire connection; 100 Ω compensation	2#0110	52 Ω to 148 Ω	2#0001
		250 Ω	2#0011
		400 Ω	2#0101
		700 Ω	2#0111
Thermal resistance + linearization 4-wire connection	2#1000	Pt 100 Klima	2#0000
		Ni 100 Klima	2#0001
		Pt 100 Standard range	2#0010
		Pt 200 Standard range	2#0011
		Pt 500 Standard range	2#0100
		Pt 1000 Standard range	2#0101
		Ni 1000 standard range	2#0110
		Pt 200 Klima	2#0111
		Pt 500 Klima	2#1000
		Pt 1000 Klima	2#1001
		Ni 1000 Klima	2#1001
		Ni 100 standard range	2#1011
Thermocouples with internal comparator	2#1010	Type B [PtRh - PtRh]	2#0000
		Type N [NiCrSi-NiSi]	2#0001
Thermocouples with external comparison	2#1011	Type E [NiCr-CuNi]	2#0010
		Type R [PtRh -Pt]	2#0011
Thermocouples + linearization internal comparison	2#1101	Type S [PtRh -Pt]	2#0100
		Type J [Fe - CuNi IEC]	2#0101
Thermocouples + linearization external comparison	2#1110	Type L [Fe-CuNi]	2#0110
		Type T [Cu - CuNi]	2#0111
		Type K [NiCr-Ni]	2#1000
		Type U [Cu -Cu Ni]	2#1001

See also

Analog modules (Page 315)

A.7 Parameters of analog input module SM 331; AI 8 x RTD

Parameters

The table below shows all parameters you can set at analog input module SM 331; AI 8 x RTD.

The comparison illustrates the parameters you can edit:

- in *STEP 7*
- using SFC55 "WR_PARM"

Parameters set in *STEP 7* can also be transferred to the module using SFC56 and SFC57 (refer to the *STEP 7* manuals).

Table A- 9 Parameters of SM 331; AI 8 x RTD

Parameters	Data record number	Programmable, using ...	
		... SFC55	... PG
Diagnostics: Group diagnostics	0	no	yes
Diagnostics: with wirebreak monitoring		no	yes
Diagnostic interrupt enable	1	yes	yes
Hardware interrupt when limit exceeded		yes	yes
End of cycle interrupt enable		yes	yes
Temperature unit		yes	yes
Measurement type	128	yes	yes
Measuring range		yes	yes
Operating mode		yes	yes
Temperature coefficient		yes	yes
Interference frequency suppression		yes	yes
Smoothing		yes	yes
High limit		yes	yes
Low limit		yes	yes

Note

To enable diagnostic interrupts in the user program at data record 1, you first need to enable diagnostics at data record 0 in *STEP 7*.

Structure of data record 1

The diagram below shows the structure of data record 1 of SM 331; AI 8 x RTD. You enable a parameter by setting a logical "1" at the corresponding bit.

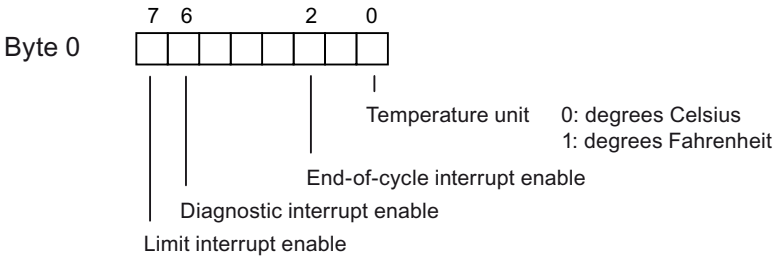

Bytes 1 to 13 are not occupied

Figure A-6 Data record 1 for the parameters of SM 331; AI 8 RTD

Structure of data record 128

The diagram below shows the structure of data record 128 of SM 331; AI 8 x RTD.

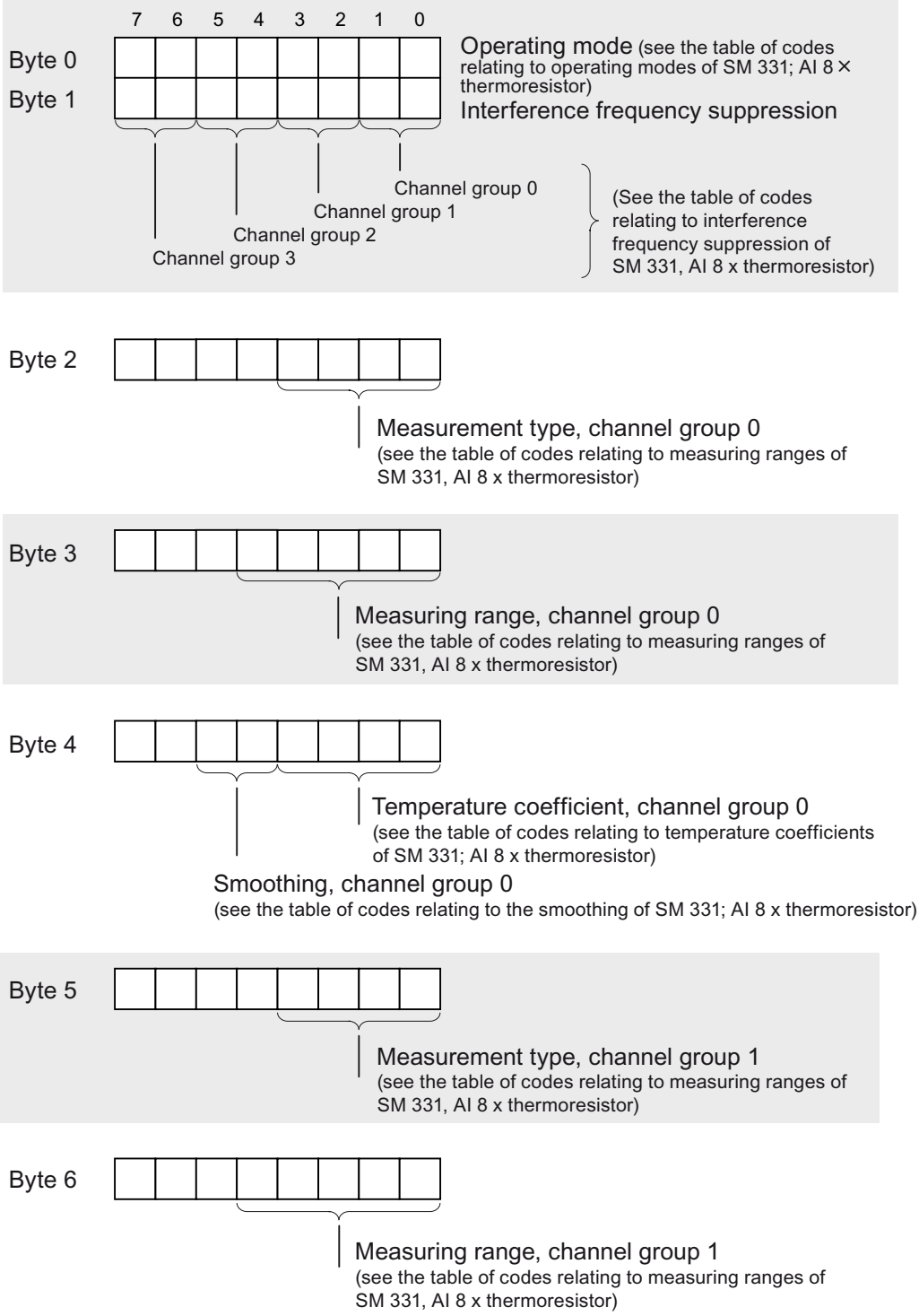

Figure A-7 Data record 128 of SM 331; AI 8 x RTD

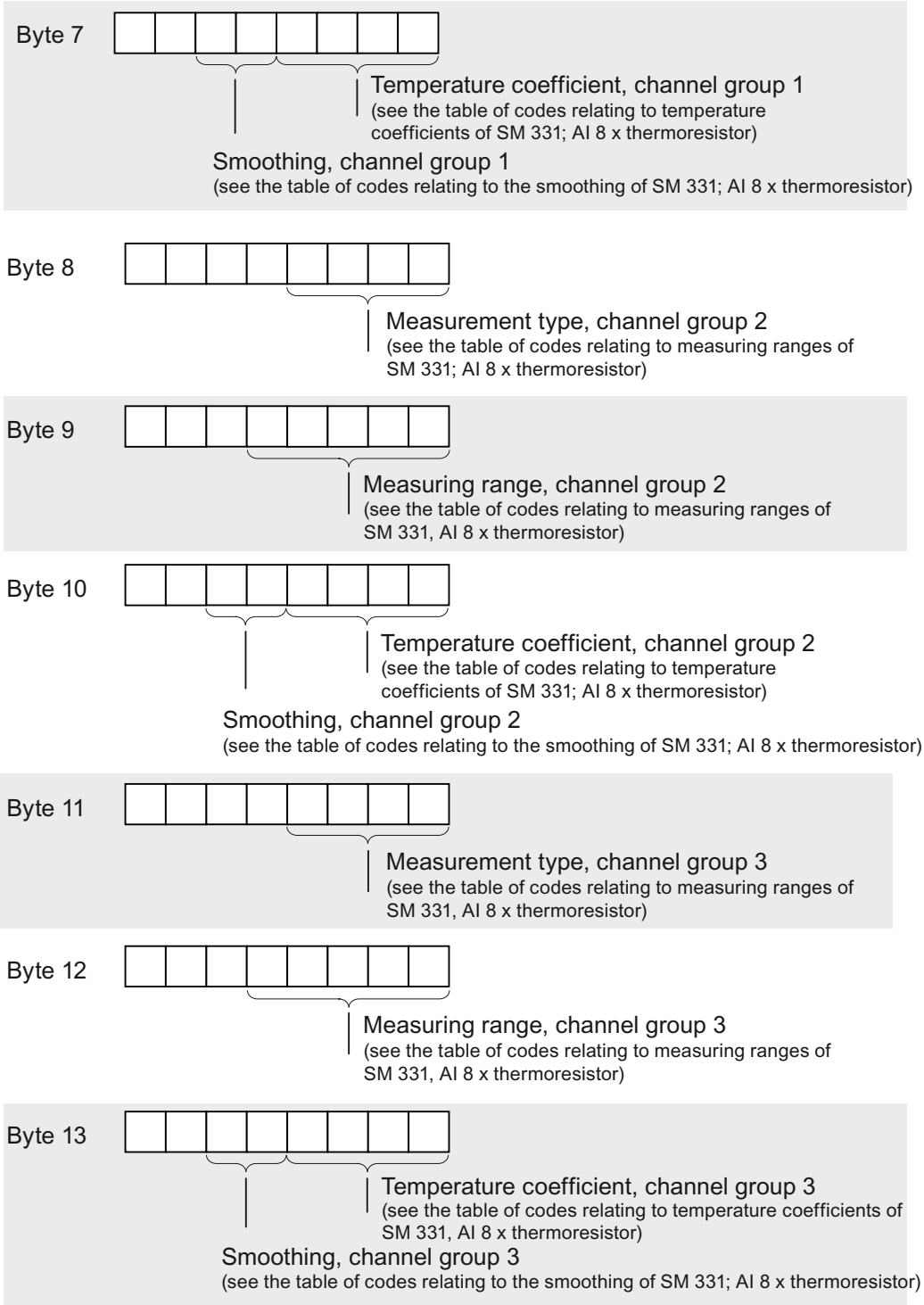

Figure A-8 Data record 128 of SM 331; AI 8 x RTD (continued)

Byte 14		High Byte	Hi limit value Channel group 0; Channel 0
Byte 15		Low Byte	
Byte 16		High Byte	Lo limit value Channel group 0; Channel 0
Byte 17		Low Byte	
Byte 18		High Byte	Hi limit value Channel group 0; Channel 1
Byte 19		Low Byte	
Byte 20		High Byte	Lo limit value Channel group 0; Channel 1
Byte 21		Low Byte	
Byte 22		High Byte	Hi limit value Channel group 1; Channel 2
Byte 23		Low Byte	
Byte 24		High Byte	Lo limit value Channel group 1; Channel 2
Byte 25		Low Byte	
Byte 26		High Byte	Hi limit value Channel group 1; Channel 3
Byte 27		Low Byte	
Byte 28		High Byte	Lo limit value Channel group 1; Channel 3
Byte 29		Low Byte	
Byte 30		High Byte	Hi limit value Channel group 2; Channel 4
Byte 31		Low Byte	
Byte 32		High Byte	Lo limit value Channel group 2; Channel 4
Byte 33		Low Byte	
Byte 34		High Byte	Hi limit value Channel group 2; Channel 5
Byte 35		Low Byte	
Byte 36		High Byte	Lo limit value Channel group 2; Channel 5
Byte 37		Low Byte	

Figure A-9 Data record 128 of SM 331; AI 8 x RTD (continued)

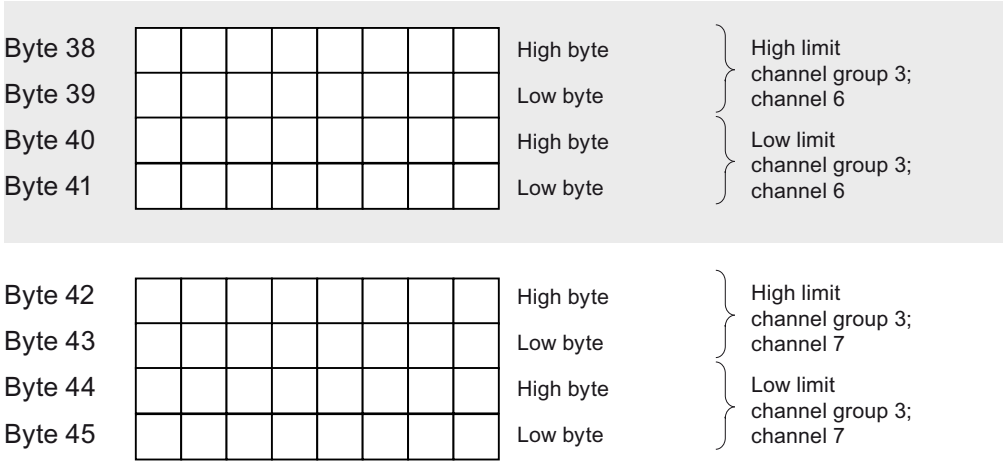

Figure A-10 Data record 128 of SM 331; AI 8 x RTD (continued)

Note

The representation of limits matches the analog value representation. Observe range limits when setting the limit values.

Modes of operation of SM 331; AI 8 x RTD

The table below contains the coding at byte 0 of data record 128 for the various modes of operation (see the previous figure.)

Table A- 10 Operating mode coding of SM 331; AI 8 x RTD

Operating mode	Code
8 channels, hardware filter	2#00000000
8 channels, software filter	2#00000001
4 channels, hardware filter	2#00000010

Interference frequency suppression at SM 331; AI 8 x RTD

The table below contains the frequency codes to be entered at byte 1 of data record 128 (see the previous figure.) The 50 Hz, 60 Hz and 400 Hz only apply to 8channel software filter mode. The 50 Hz, 60 Hz and 400 Hz settings only apply to 4- and 8-channel hardware filter mode.

Table A- 11 Interference suppression coding of SM 331; AI 8 x RTD

Interference frequency suppression	Code
400 Hz	2#00
60 Hz	2#01
50 Hz	2#10
50/60/400 Hz	2#11

Measurement types and measuring ranges of SM 331; AI 8 x RTD

The table below shows all measurement types and measuring ranges of the module, including their codes. Enter these codes at the corresponding bytes of data record 128 (see the figure *Data record 1 for the parameters of analog input modules*).

Table A- 12 Measuring range codes of SM 331; AI 8 x RTD

Measurement type	Code	Measuring range	Code
disabled	2#0000	disabled	2#0000
Resistance (4-wire connection)	2#0100	150 Ω 300 Ω 600 Ω	2#0010 2#0100 2#0110
Resistance (3-wire connection)	2#0101	150 Ω 300 Ω 600 Ω	2#0010 2#0100 2#0110

Measurement type	Code	Measuring range	Code
Thermal resistance + linearization 4-wire connection	2#1000	Pt 100 Climatic	2#00000000
		Ni 100 Climatic	2#00000001
		Pt 100 Standard	2#00000010
		Ni 100 Standard	2#00000011
		Pt 500 Standard	2#00000100
		Pt 1000 Standard	2#00000101
		Ni 1000 Standard	2#00000110
		Pt 200 Climatic	2#00000111
		Pt 500 Climatic	2#00001000
		Pt 1000 Climatic	2#00001001
		Ni 1000 Climatic	2#00001010
		Pt 200 Standard	2#00001011
		Ni 120 Standard	2#00001100
		Ni 120 Climatic	2#00001101
		Cu 10 Climatic	2#00001110
		Cu 10 Standard	2#00001111
		Ni 200 Standard	2#00010000
		Ni 200 Climatic	2#00010001
		Ni 500 Standard	2#00010010
		Ni 500 Climatic	2#00010011
		Pt 10 GOST Climatic	2#00010100
		Pt 10 GOST Standard	2#00010101
		Pt 50 GOST Climatic	2#00010110
		Pt 50 GOST Climatic	2#00010111
		Pt 100 GOST Climatic	2#00011000
		Pt 100 GOST Standard	2#00011001
		Pt 500 GOST Climatic	2#00011010
		Pt 500 GOST Standard	2#00011011
		Cu 10 GOST Climatic	2#00011100
		Cu 10 GOST Standard	2#00011101
		Cu 50 GOST Climatic	2#00011110
		Cu 50 GOST Standard	2#00011111
		Cu 100 GOST Climatic	2#00100000
		Cu 100 GOST Standard	2#00100001
		Ni 100 GOST Climatic	2#00100010
		Ni 100 GOST Standard	2#00100011

Measurement type	Code	Measuring range	Code
Thermal resistance + linearization 3-wire connection	2#1001	Pt 100 climatic	2#00000000
		Ni 100 climatic	2#00000001
		Pt 100 standard	2#00000010
		Ni 100 standard	2#00000011
		Pt 500 standard	2#00000100
		Pt 1000 standard	2#00000101
		Ni 1000 standard	2#00000110
		Pt 200 climatic	2#00000111
		Pt 500 climatic	2#00001000
		Pt 1000 climatic	2#00001001
		Ni 1000 climatic	2#00001010
		Pt 200 standard	2#00001011
		Ni 120 standard	2#00001100
		Ni 120 climatic	2#00001101
		Cu 10 climatic	2#00001110
		Cu 10 standard	2#00001111
		Ni 200 standard	2#00010000
		Ni 200 climatic	2#00010001
		Ni 500 standard	2#00010010
		Ni 500 climatic	2#00010011
		Pt 10 GOST climatic	2#00010100
		Pt 10 GOST standard	2#00010101
		Pt 50 GOST climatic	2#00010110
		Pt 50 GOST standard	2#00010111
		Pt 100 GOST climatic	2#00011000
		Pt 100 GOST standard	2#00011001
		Pt 500 GOST climatic	2#00011010
		Pt 500 GOST standard	2#00011011
		Cu 10 GOST climatic	2#00011100
		Cu 10 GOST standard	2#00011101
		Cu 50 GOST climatic	2#00011110
		Cu 50 GOST standard	2#00011111
		Cu 100 GOST climatic	2#00100000
		Cu 100 GOST standard	2#00100001
		Ni 100 GOST climatic	2#00100010
		Ni 100 GOST standard	2#00100011

Temperature coefficient of SM 331; AI 8 x RTD

The table below contains the temperature coefficient codes to be entered at the corresponding byte of data record 128 (refer to the previous figure.)

Table A- 13 Temperature coefficient codes of SM 331; AI 8 x RTD

Temperature coefficient	Code
Pt 0.003850 Ω/Ω/°C (IPTS-68)	2#0000
Pt 0,003916 Ω/Ω/°C	2#0001
Pt 0.003902 Ω/Ω/°C	2#0010
Pt 0.003920 Ω/Ω/°C	2#0011
Pt 0.003850 Ω/Ω/°C (ITS-90)	2#0100
Pt 0.003910 Ω/Ω/°C	2#0101
Pt 0.006170 Ω/Ω/°C	2#0111
Ni 0.006180 Ω/Ω/°C	2#1000
Ni 0.006720 Ω/Ω/°C	2#1001
0.005000 Ω/Ω/ °C (LG Ni 1000)	2#1010
Cu 0.004260 Ω/Ω/°C	2#1011
Cu 0.004270 Ω/Ω/°C	2#1100
Cu 0.004280 Ω/Ω/°C	2#1101

Smoothing function at SM 331; AI 8 x RTD

The table below lists all smoothing codes to be entered at the corresponding byte of data record 128 (refer to the previous figure.)

Table A- 14 Smoothing codes at SM 331; AI 8 x RTD

Smoothing	Code
None	2#00
Low	2#01
Average	2#10
High	2#11

See also

Analog modules (Page 315)

Parameters of analog input modules (Page 560)

A.8 Parameters of SM 331; AI 8 TC

Parameter

The table below shows all parameters you can set at analog input module SM 331; AI 8 x TC.

The comparison illustrates the parameters you can edit:

- in *STEP 7*
- using SFC55 "WR_PARM"

Parameters set in *STEP 7* can also be transferred to the module using SFC56 and SFC57 (refer to the *STEP 7* manuals).

Table A- 15 Parameters of SM 331; AI 8 TC

Parameters	Data record number	Programmable, using ...	
		... SFC55	... PG
Diagnostics: Group diagnostics	0	no	yes
Diagnostics: with wirebreak monitoring		no	yes
Diagnostic interrupt enable	1	yes	yes
Hardware interrupt when limit exceeded		yes	yes
End of cycle interrupt enable		yes	yes
Temperature unit		yes	yes
Measurement type	128	yes	yes
Measuring range		yes	yes
Operating mode		yes	yes
Response to open thermocouple		yes	yes
Interference frequency suppression		yes	yes
Smoothing		yes	yes
High limit		yes	yes
Low limit		yes	yes

Note

To enable diagnostic interrupts in the user program at data record 1, you first need to enable diagnostics at data record 0 in *STEP 7*.

Structure of data record 1

The figure below shows the structure of data record 1 of SM 331; AI 8 x TC. You enable a parameter by setting a logical "1" at the corresponding bit.

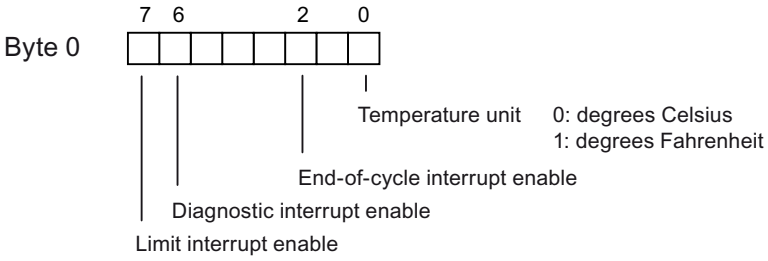

Bytes 1 to 13 are not occupied

Figure A-11 Data record 1 for the parameters of SM 331; AI 8 x TC

Structure of data record 128

The figure below shows the structure of data record 128 of SM 331; AI 8 x TC.

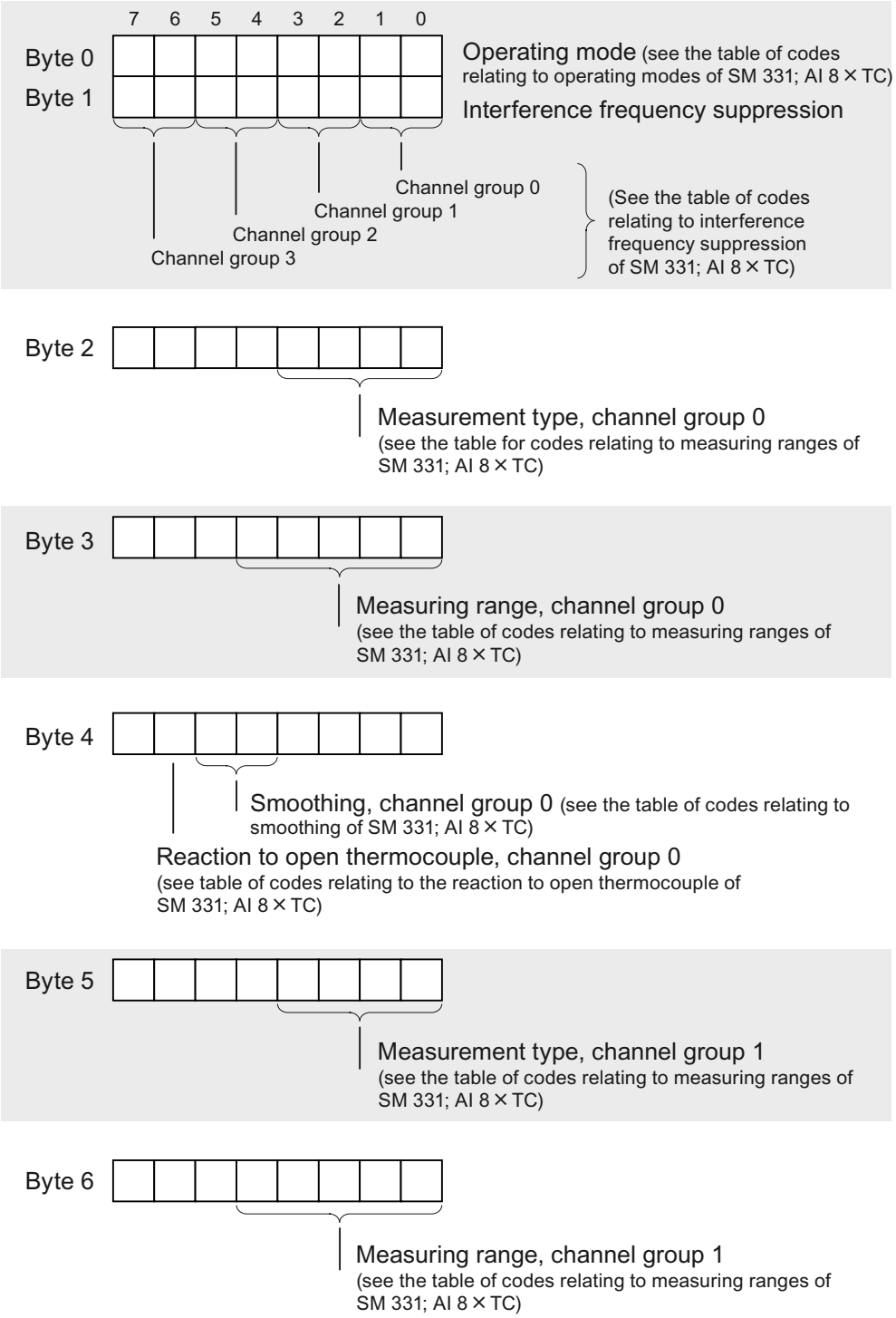

Figure A-12 Fig. A-10 Data record 128 of SM 331; AI 8 x TC (continued)

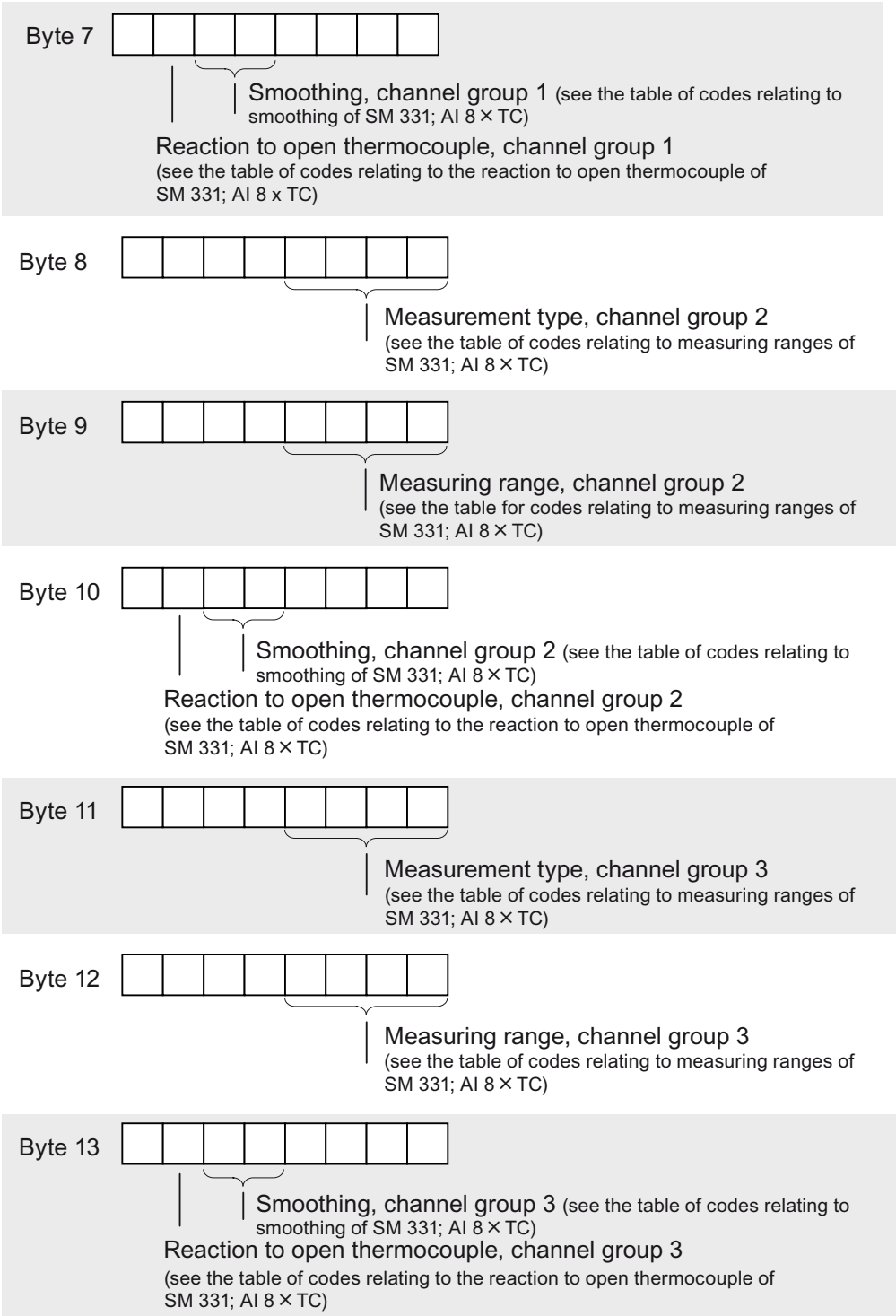

Figure A-13 Data record 128 of SM 331; AI 8 TC (continued)

Byte 14									High byte	High limit channel group 0; channel 0
Byte 15									Low byte	
Byte 16									High byte	Low limit channel group 0; channel 0
Byte 17									Low byte	
Byte 18									High byte	High limit channel group 0; channel 1
Byte 19									Low byte	
Byte 20									High byte	Low limit channel group 0; channel 1
Byte 21									Low byte	
Byte 22									High byte	High limit channel group 1; channel 2
Byte 23									Low byte	
Byte 24									High byte	Low limit channel group 1; channel 2
Byte 25									Low byte	
Byte 26									High byte	High limit channel group 1; channel 3
Byte 27									Low byte	
Byte 28									High byte	Low limit channel group 1; channel 3
Byte 29									Low byte	
Byte 30									High byte	High limit channel group 2; channel 4
Byte 31									Low byte	
Byte 32									High byte	Low limit channel group 2; channel 4
Byte 33									Low byte	
Byte 34									High byte	High limit channel group 2; channel 5
Byte 35									Low byte	
Byte 36									High byte	Low limit channel group 2; channel 5
Byte 37									Low byte	

Figure A-14 Data record 128 of SM 331; AI 8 TC (continued)

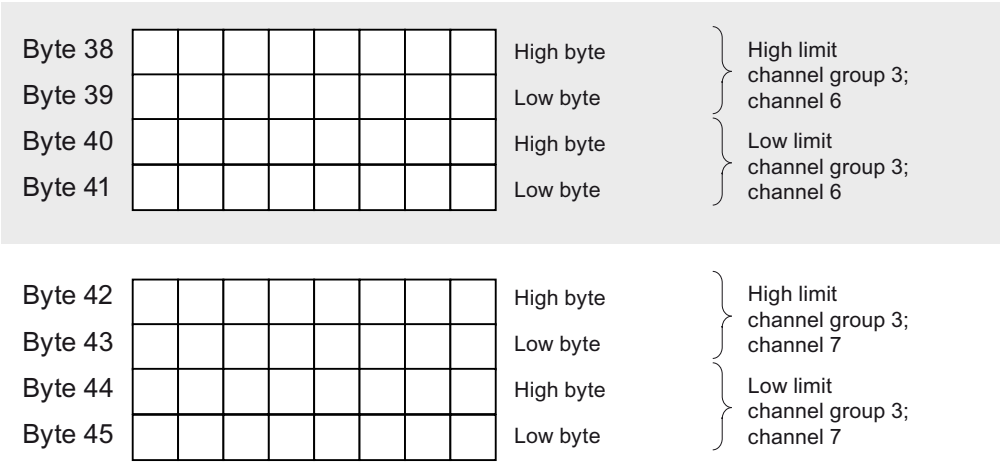

Figure A-15 Data record 128 of SM 331; AI 8 TC (continued)

Note

The representation of limits matches the analog value representation. Observe range limits when setting the limit values.

Modes of operation of SM 331; AI 8 x TC

The table below contains the coding at byte 0 of data record 128 for the various modes of operation (see the previous figure.)

Table A- 16 Operating mode codes of SM 331; AI 8 x TC

Operating mode	Code
8 channels, hardware filter	2#00000000
8 channels, software filter	2#00000001
4 channels, hardware filter	2#00000010

Interference frequency suppression at SM 331; AI 8 x TC

The table below contains the frequency codes to be entered at byte 1 of data record 128 (see the previous figure.) The 400 Hz, 60 Hz and 50 Hz settings only apply to 8channel software filter mode. The 50 Hz, 60 Hz and 400 Hz settings only apply to 4- and 8-channel hardware filter mode.

Table A- 17 Interference frequency suppression codes of SM 331; AI 8 x TC

Interference frequency suppression	Code
400 Hz	2#00
60 Hz	2#01
50 Hz	2#10
50/60/400 Hz	2#11

Measurement types and measuring ranges of SM 331; AI 8 x TC

The table below shows all measurement types and measuring ranges of the module, including their codes. Enter these codes at the corresponding bytes of data record 128 (see the figure *Data record 1 for the parameters of analog input modules*).

Table A- 18 Measuring range codes of SM 331; AI 8 x TC

Measurement type	Code	Measuring range	Code
disabled	2#0000	disabled	2#0000
TC-L00C: (thermocouple, linear, 0 °C reference temperature)	2#1010	B N E R S J L T K U C TXK/XK(L)	2#0000 2#0001 2#0010 2#0011 2#0100 2#0101 2#0110 2#0111 2#1000 2#1001 2#1010 2#1011
TC-L50C: (thermocouple, linear, 50 °C reference temperature)	2#1011	B N E R S J L T K U C TXK/XK(L)	2#0000 2#0001 2#0010 2#0011 2#0100 2#0101 2#0110 2#0111 2#1000 2#1001 2#1010 2#1011

Measurement type	Code	Measuring range	Code
TC-IL: (thermocouple, linear, internal comparison)	2#1101	B N E R S J L T K U C TXK/XK(L)	2#0000 2#0001 2#0010 2#0011 2#0100 2#0101 2#0110 2#0111 2#1000 2#1001 2#1010 2#1011
TC-EL: (thermocouple, linear, external comparison)	2#1110	B N E R S J L T K U C TXK/XK(L)	2#0000 2#0001 2#0010 2#0011 2#0100 2#0101 2#0110 2#0111 2#1000 2#1001 2#1010 2#1011

Response to open thermocouple at SM 331; AI 8 x

The table below lists the codes for the reaction to an open thermocouple to enter at the corresponding byte of data record 128 (refer the previoius figure.)

Table A- 19 Codes of the reaction to open thermocouple of SM 331; AI 8 x TC

Response to open thermocouple	Code
Overflow	2#0
Underflow	2#1

Smoothing of SM 331; AI 8 x TC

The table below lists all smoothing codes to be entered at the corresponding byte of data record 128 (refer to the previous figure.)

Table A- 20 Smoothing codes at SM 331; AI 8 x TC

Smoothing	Code
None	2#00
Low	2#01
Average	2#10
High	2#11

See also

Analog modules (Page 315)

Parameters of analog input modules (Page 560)

A.9 Parameters of analog input module SM 331; AI 8 x 13 Bit

Structure of data record 1

The figure below shows the structure of data record 1 for the parameters of the analog input module.

You enable a parameter by setting a logical "1" at the corresponding bit in the bytes.

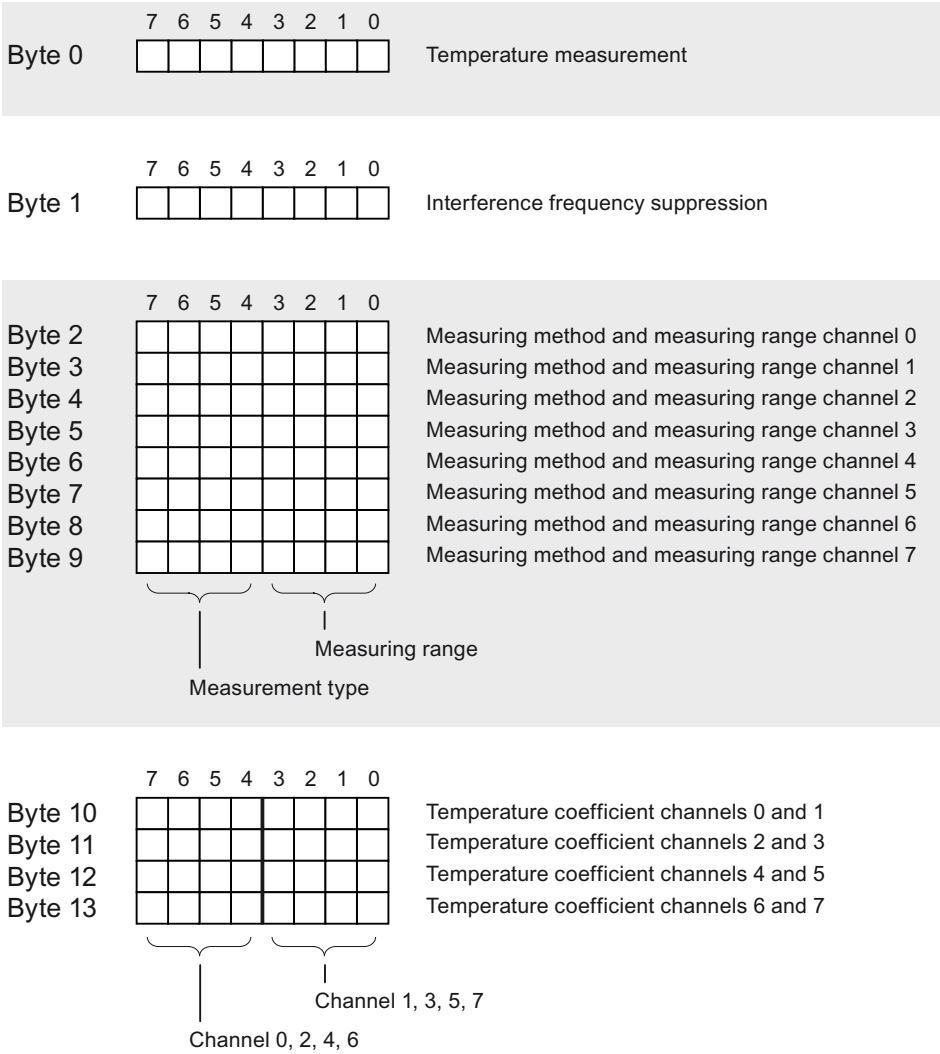

Figure A-16 Data record 1 for the parameters of analog input modules

Temperature measurement

The table below lists the temperature measurement codes to be enterd at byte 0 of data record 1 (see the previous figure.)

Table A- 21 Temperature measurement codes of the analog input module

Temperature unit for linearization	Code
degrees Celsius	2#0000 0000
Degrees Fahrenheit	2#0000 1000
Kelvin	2#0001 0000

Interference frequency suppression

The table below contains the frequency codes to be entered at byte 1 of data record 1 (see the previous figure.) Make allowances for the resultant integration time at each module!

Table A- 22 Interference frequency suppression codes of the analog input module

Interference frequency suppression	Integration time	Code
60 Hz	50 ms	2#01
50 Hz	60 ms	2#10

Measurement types and measuring ranges

The table below contains all the measurement types and measuring ranges of the analog input module, including their codes. Enter these codes at bytes 2 to 13 in data record 1 (refer to the previous figure.)

Note

The front connector of the analog input module must be wired in accordance with the measuring range!

Table A- 23 Measuring ranges codes of the analog input module

Measurement type	Code	Measuring range	Code
disabled	2#0000	disabled	2#0000
Voltage	2#0001	± 50 mV	2#1011
		± 500 mV	2#0011
		± 1 V	2#0100
		± 5 V	2# 0110
		1 V to 5 V	2#0111
		0 V to 10 V	2#1000
		± 10 V	2#1001
Current	2#0010	0 mA to 20 mA	2#0010
		4 mA to 20 mA	2#0011
		± 20 mA	2#0100
Resistance	2#0101	600 Ω	2#0110
		6 kΩ	2#1000
		PTC	2#1111
Thermoelectric resistance (linear)	2#1001	Pt 100 Klima	2#0000
		Pt 100 Standard	2#0010
		Ni 100 Klima	2#0001
		Ni 100 Standard	2#0011
		Ni 1000 / LG-Ni 1000 Klima	2#1010
		Ni 1000 / LG-Ni 1000 Standard	2#0110
		KTY83/110	2#1100
		KTY84/130	2#1101

Temperature coefficient

The table below lists the temperature coefficient codes to be entered at bytes 10 to 13 of data record 1 (refer to previous figure.)

Table A- 24 Temperature measurement codes of the analog input module

Temperature coefficient	Measuring range	Code
Pt 0.003850 Ω/Ω/°C (ITS-90)	Pt 100	2#0100
Ni 0.006180 Ω/Ω/°C	Ni 100 / Ni 1000	2#1000
Ni 0.005000 Ω/Ω/°C	LG-Ni 1000	2#1010

A.10 Setting of the analog input module SM 331; AI 8 x 16 Bit (6ES7331-7NF10-0AB0)

Parameter

The table below contains all settings you can set for isolated digital output modules SM 331; AI 8 ×16 Bit (6ES7331-7NF10-0AB0). This comparison shows which specific method you can use to configure the various parameters:

- SFC55 "WR_PARM"
- *STEP 7* programming device

Parameters set in *STEP 7* can also be transferred to the module using SFC56 or SFC57.

Table A- 25 Parameters for the electrically isolated analog input module SM 331; AI 8 x 16 Bit

Parameters	Data record no.	Configurable using...	
		... SFC55	...Programming device
Diagnostics: Group diagnostics	0	no	yes
Diagnostics: with wirebreak monitoring		no	yes
Hardware interrupt when limit exceeded	1	yes	yes
Diagnostics interrupt enable		yes	yes
End-of-cycle alarm enable		yes	yes
Module operating mode	128	yes	yes
Noise suppression		yes	yes
Measuring method		yes	yes
Measuring range		yes	yes
Smoothing		yes	yes
High limit		yes	yes
Low limit		yes	yes

Note

To enable diagnostic interrupts in the user program at data record 1, you first need to enable diagnostics at data record 0 in *STEP 7*.

Structure of data record 1

The figure below shows the structure of data record 1 for the parameters of the electrically isolated analog input module SM 331; AI 8 x 16 bit.

You enable a parameter by setting a logical "1" at the corresponding bit in byte 0.

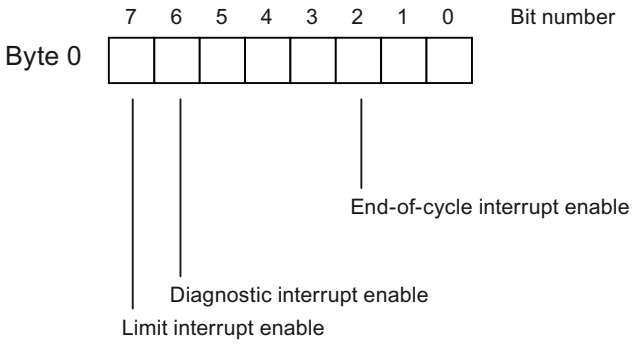

Bytes 1 to 13 are not occupied

Figure A-17 Data record 1 for parameters of SM 331; AI 8 x 16 Bit

Structure of data record 128

The figure below shows the structure of data record 128 for the parameters of the electrically isolated analog input module SM 331; AI 8 x 16 bit.

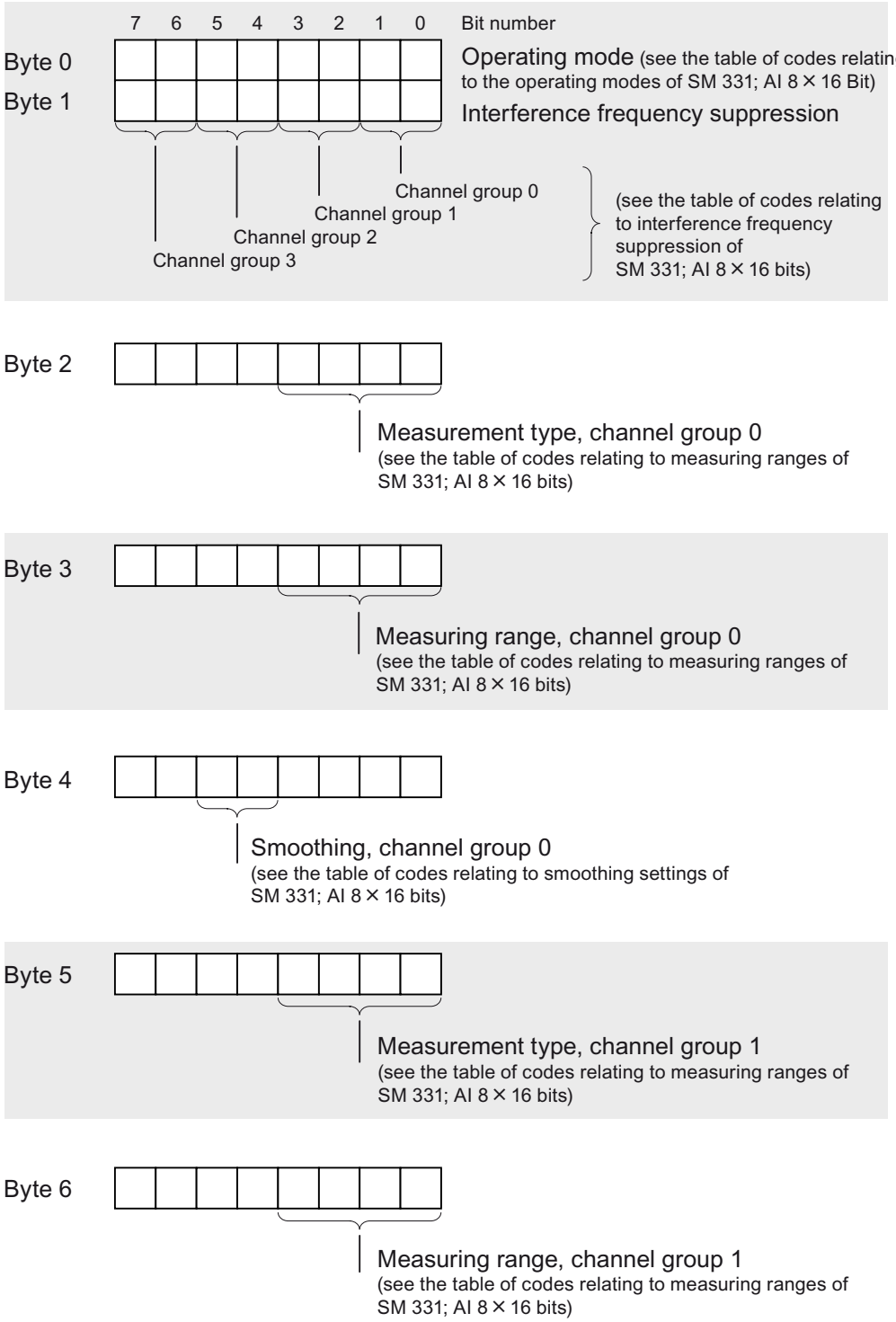

Figure A-18 Data record 128 for parameters of SM 331; AI 8 x 16 Bit

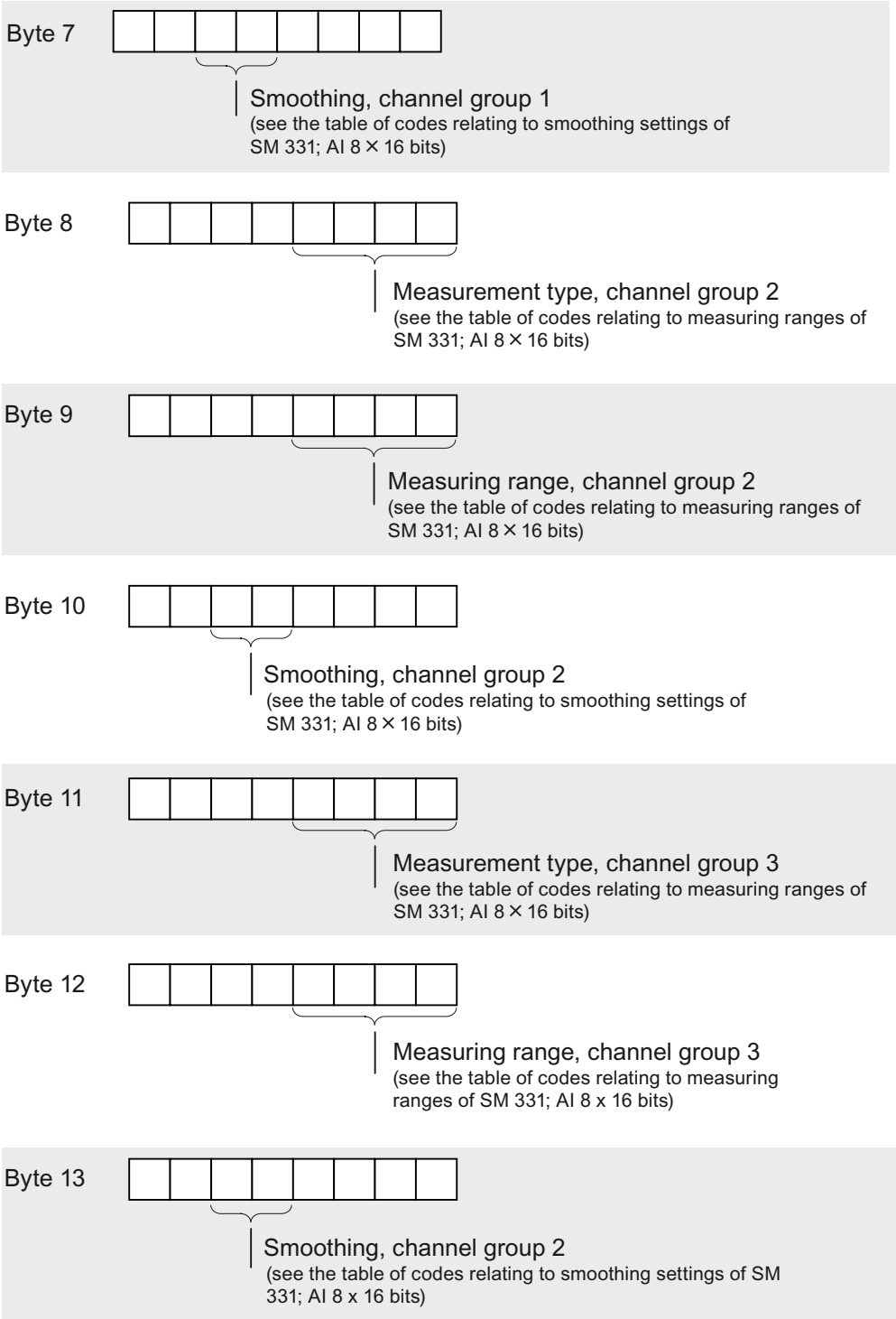

Figure A-19 Data record 128 for parameters of SM 331; AI 8 x 16 Bit (continued)

Byte 14		High byte	High limit channel group 0; channel 0
Byte 15		Low byte	
Byte 16		High byte	Low limit channel group 0; channel 0
Byte 17		Low byte	
Byte 18		High byte	High limit channel group 0; channel 1
Byte 19		Low byte	
Byte 20		High byte	Low limit channel group 0; channel 1
Byte 21		Low byte	
Byte 22		High byte	High limit channel group 1; channel 2
Byte 23		Low byte	
Byte 24		High byte	Low limit channel group 1; channel 2
Byte 25		Low byte	
Byte 26		High byte	High limit channel group 1; channel 3
Byte 27		Low byte	
Byte 28		High byte	Low limit channel group 1; channel 3
Byte 29		Low byte	
Byte 30		High byte	High limit channel group 2; channel 4
Byte 31		Low byte	
Byte 32		High byte	Low limit channel group 2; channel 4
Byte 33		Low byte	
Byte 34		High byte	High limit channel group 2; channel 5
Byte 35		Low byte	
Byte 36		High byte	Low limit channel group 2; channel 5
Byte 37		Low byte	

Figure A-20 Data record 128 for parameters of SM 331; AI 8 x 16 Bit (continued)

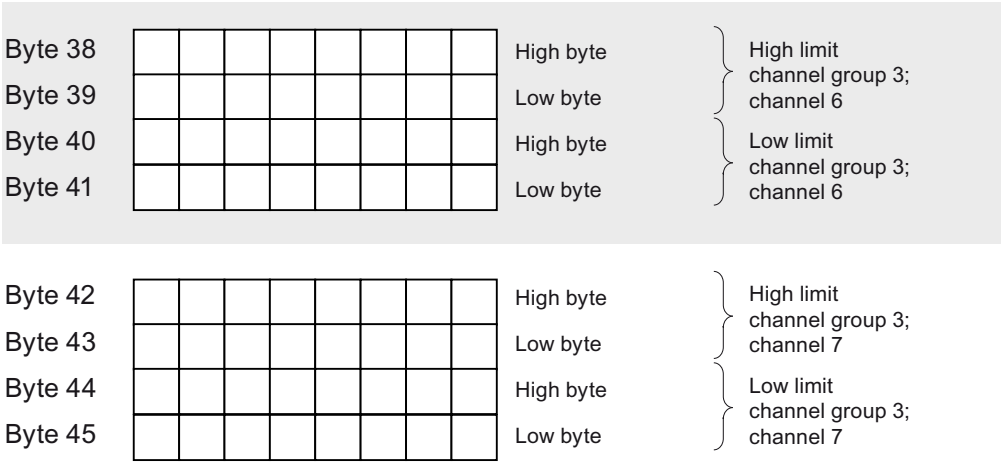

Figure A-21 Data record 128 for parameters of SM 331; AI 8 x 16 Bit (continued)

Note

The representation of limits matches the analog value representation. Observe range limits when setting the limit values.

Module operating modes

The table below lists the operating mode codes to be entered at byte 0 of data record 128 (see the previous figure.)

Table A- 26 Operating mode codes of SM 331; AI 8 x 16 Bit

Module operating mode	Code
8 channels	2#00000000
4 channels	2#00000001

Noise suppression

The table below lists the frequency codes to be entered at byte 1 of data record 128 (see the previous figure.) 4-channel mode only works if 50 Hz, 60 Hz and 400 Hz noise suppression is set.

Table A- 27 Noise suppression codes of SM 331; AI 8 x 16 Bit

Noise suppression	Code
400 Hz	2#00
60 Hz	2#01
50 Hz	2#10
50 Hz, 60 Hz and 400 Hz	2#11

Measuring methods and ranges

The table below lists the measuring ranges of the electrically isolated analog input module SM 331; AI 8 x 16 bit. The table below shows the measuring method and range codes. Enter these codes according to the required measuring range at the relevant byte of data record 128 (see previous figure.)

Table A- 28 Measuring range codes of SM 331; AI 8 x 16 Bit

Measuring method	Code	Measuring range	Code
Disabled	2#0000	Disabled	2#0000
Voltage	2#0001	±5 V 1 V to 5 V ±10 V	2#0110 2#0111 2#1001
Current (4-wire transducer)	2#0010	0 mA to 20 mA 4 mA to 20 mA ± 20 mA	2#0010 2#0011 2#0100

Settings of input smoothing

The table below lists the smoothing settings of the electrically isolated analog input module SM 331; AI 8 x 16 Bit. Enter these codes according to the required smoothing at the relevant byte of data record 128 (see previous figure.)

Table A- 29 Smoothing codes of SM 331; AI 8 x 16 Bit

Smoothing settings	Code
None	2#00
Low	2#01
Average	2#10
High	2#11

See also

Analog modules (Page 315)

A.11 Parameters of analog input module SM 331; AI 6 x TC isolated

Parameter

The table below shows all parameters you can set at analog input module SM 331; AI 6 x TC.

The comparison illustrates the parameters you can edit:

- In *STEP 7*
- Using SFC55 "WR_PARM"

Parameters set in *STEP 7* can also be transferred to the module using SFC56 and SFC57 (refer to the STEP 7 manuals).

Parameters	Data record number	Programmable, using ...	
		... SFC55	... PG
Diagnostics: Channel	0	No	Yes
Diagnostics: For wire break	0	No	Yes
Hardware interrupt when limit exceeded	1	Yes	Yes
Diagnostic interrupt enable	1	Yes	Yes
Temperature unit	1	Yes	Yes
Activation of auto-calibration	1	Yes	Yes
Interference frequency suppression	1	Yes	Yes
Measurement type	1	Yes	Yes
Measuring range	1	Yes	Yes
Measured value smoothing	1	Yes	Yes
Response to open thermocouple	1	Yes	Yes
External reference junction	1	Yes	Yes
Temperature coefficient	1	Yes	Yes
High limit	128	Yes	Yes
Low limit	128	Yes	Yes

Note

To enable diagnostic interrupts in the user program at data record 1, you first need to enable diagnostics at data record 0 in *STEP 7*.

Structure of data record 1

The figure below shows the structure of data record 1 for the parameters of analog input module SM 331; AI 6 x TC. You enable a parameter by setting a logical "1" at the corresponding bit.

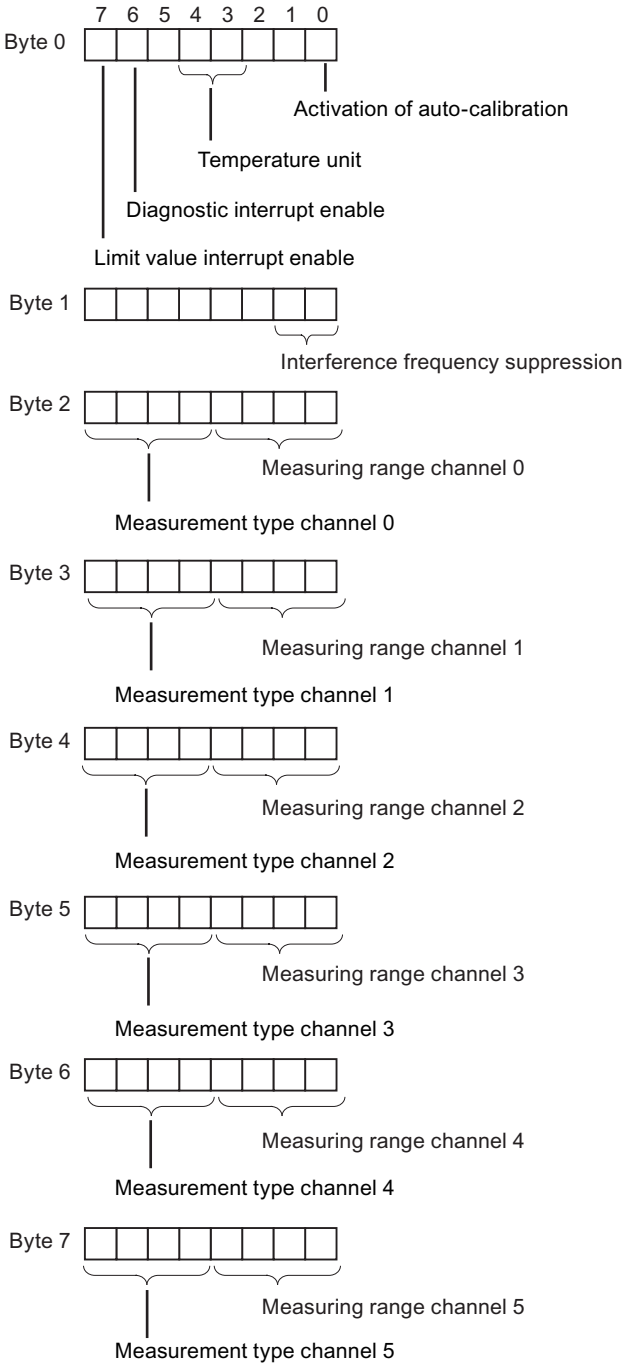

Figure A-22 Structure of data record 1 for AI 6 x TC

Structure of data record 128

The figure below shows the structure of data record 128 for the parameters of analog input module SM 331; AI 6 x TC.

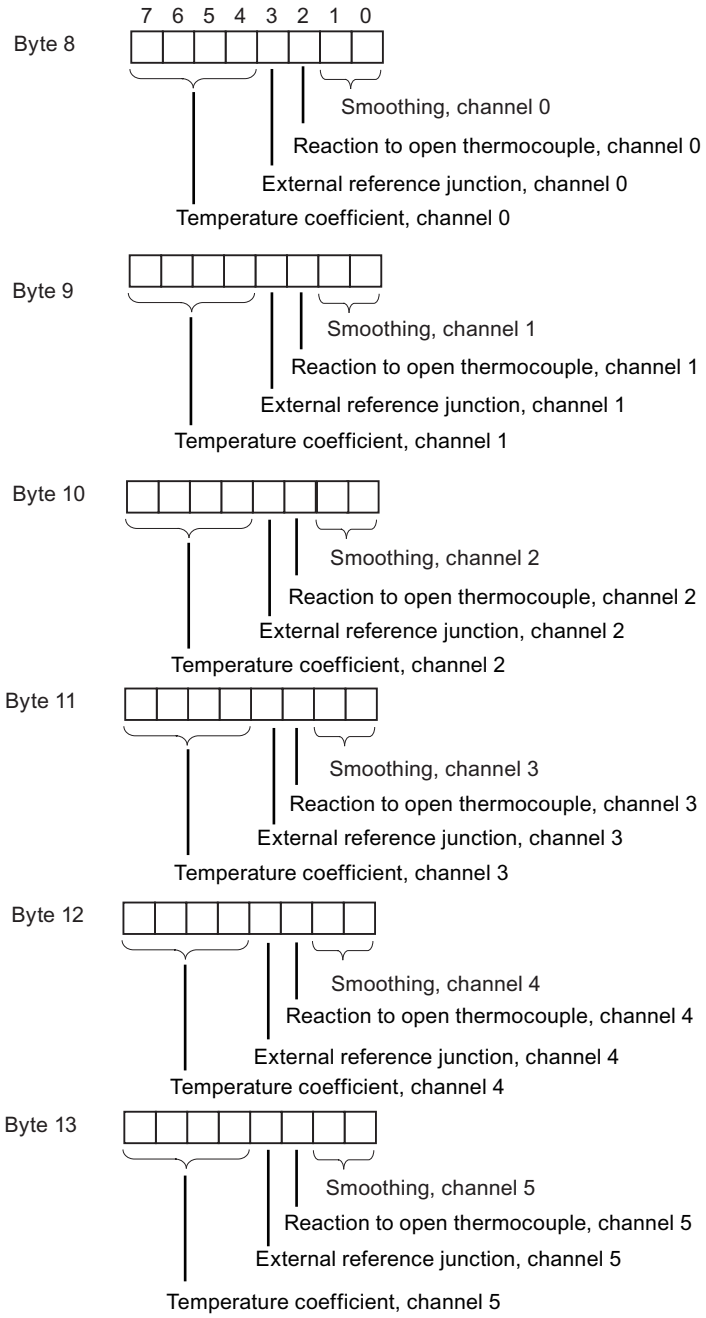

Figure A-23 Structure of data record 1 for AI 6 x TC (cont.)

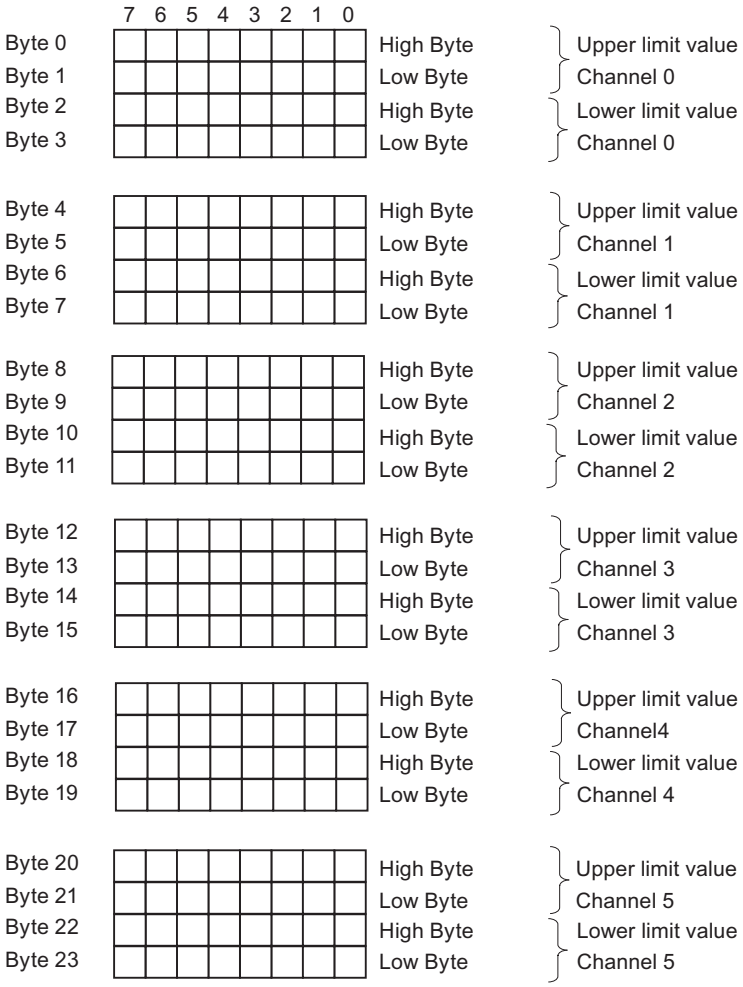

Figure A-24 Data record 128 for AI 6 x TC

Note

The representation of limits matches the analog value representation. When defining limit values, take the measuring range limits into account.

Temperature measurement

The table below contains the coding you must enter at byte 0 of data record 1 for the various temperature measurements.

Temperature unit for linearization	Code
Celsius	2#00
Fahrenheit	2#01
Kelvin	2#10

Interference frequency suppression

The table below contains the coding you must enter at byte 1 of data record 1 for the various frequencies.

Interference frequency suppression	Code
400 Hz	2#00
60 Hz	2#01
50 Hz	2#10
10 Hz	2#11

Measurement types and measuring ranges

The table below contains all measuring ranges for the module, together with the associated codes. Enter these codes at the corresponding bytes of data record 1.

Measurement type	Code	Measuring range	Code
disabled	2#0000	disabled	2#0000
Voltage	2#0001	± 80 mV ± 250 mV ± 500 mV ± 1 V ± 25 mV ± 50 mV	2#0001 2#0010 2#0011 2#0100 2#1010 2#1011
TC-L00C Thermocouple, linear, 0 °C reference temperature	2#1010	B N E R S J L T K U C TxK/XK(L)	2#0000 2#0001 2#0010 2#0011 2#0100 2#0101 2#0110 2#0111 2#1000 2#1001 2#1010 2#1011
TC-L50C Thermocouple, linear, 50 °C reference temperature	2#1011	B N E R S J L T K U C TxK/XK(L)	2#0000 2#0001 2#0010 2#0011 2#0100 2#0101 2#0110 2#0111 2#1000 2#1001 2#1010 2#1011

Measurement type	Code	Measuring range	Code
TC-IL Thermocouple, linear, internal comparison	2#1101	B N E R S J L T K U C TxK/XK(L)	2#0000 2#0001 2#0010 2#0011 2#0100 2#0101 2#0110 2#0111 2#1000 2#1001 2#1010 2#1011
TC-EL: Thermocouple, linear, external comparison	2#1110	B N E R S J L T K U C TxK/XK(L)	2#0000 2#0001 2#0010 2#0011 2#0100 2#0101 2#0110 2#0111 2#1000 2#1001 2#1010 2#1011

Smoothing

The table below lists all smoothing codes to be entered at the corresponding byte of data record 1.

Smoothing	Code
None	2#00
Low	2#01
Average	2#10
High	2#11

Response to open thermocouple

The table below lists the codes for the reaction to an open thermocouple to be entered at the corresponding byte of data record 1.

Response to open thermocouple	Code
Overflow	2#0
Underflow	2#1

External reference junction

The table below lists the codes for the external reference junction, to be entered at the corresponding byte of data record 1.

Selection of an external reference junction	Code
Local thermoresistor	2#0
Remote thermoresistor	2#1

Temperature coefficient

The table below lists the codes for the temperature coefficient, to be entered at the corresponding byte of data record 1.

Temperature coefficient	Code
Pt 0.003850 Ω/Ω/°C (IPTS-68)	2#0000
Pt 0.003916 Ω/Ω/°C	2#0001
Pt 0.003902 Ω/Ω/°C	2#0010
Pt 0.003920 Ω/Ω/°C	2#0011
Pt 0.003850 Ω/Ω/°C (ITS-90)	2#0100
Pt 0.003910 Ω/Ω/°C (GOST)	2#0101

Note

When selecting a temperature coefficient by writing data record 1 via an SFC or a GSD file, the same temperature coefficient must be specified for every channel which uses the external reference junction. If you select different temperature coefficients, this will lead to a parameter fault.

A.12 Parameters of analog output modules

Parameters

The table below lists all parameters you can set for analog output modules. The comparison shows:

- which parameters you can edit in *STEP 7*, and
- which parameters you can change using SFC55 "WR_PARM".

Parameters set in *STEP 7* can also be transferred to the module using SFC56 and SFC57.

Table A- 30 Parameters of analog output modules

Parameters	Data record number	Programmable, using ...	
		... SFC55	... PG
Diagnostics: Group diagnostics	0	No	Yes
Diagnostic interrupt enable	1	Yes	Yes
Reaction to CPU STOP		Yes	Yes
Output type		Yes	Yes
Output range		Yes	Yes
Substitute value		Yes	Yes

Note

To enable diagnostic interrupts in the user program at data record 1, you first need to enable diagnostics at data record 0 in *STEP 7*.

Structure of data record 1

The figure below shows the structure of data record 1 for the parameters of analog output modules.

You enable diagnostic interrupts by setting a logic "1" at the corresponding bit of byte 0.

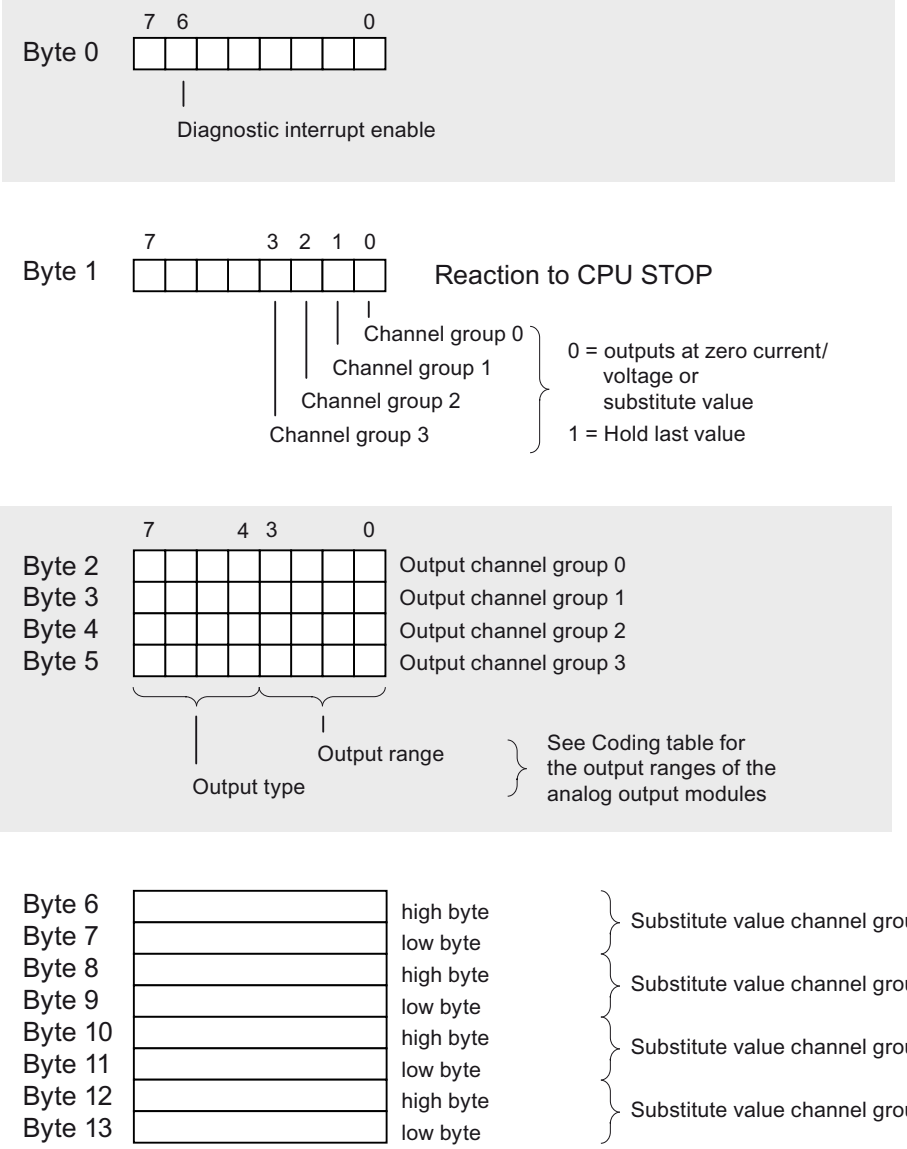

Figure A-25 Data record 1 for the parameters of analog output modules

Output types and output ranges

The table below lists all output types/ranges of the analog output modules, including their codes. Enter these codes at bytes 2 to 5 in data record 1 (refer to the previous figure.)

Table A- 31 Output range codes of analog output modules

Output type	Code	Output range	Code
disabled	2#0000	disabled	2#0000
Voltage	2#0001	1 V to 5 V 0 V to 10 V ± 10 V	2#0111 2#1000 2#1001
Current	2#0010	0 mA to 20 mA 4 mA to 20 mA ± 20 mA	2#0010 2#0011 2#0100

See also

Analog modules (Page 315)

A.13 Parameters of analog output module SM 332; AO 8 x 12 Bit

Parameter

The table below shows all parameters you can set at analog output module SM 332; AO 8 x 12 Bit. The comparison shows:

- which parameters you can edit in *STEP 7*, and
- which parameters you can change using SFC 55 "WR_PARM".

Parameters set in *STEP 7* can also be transferred to the module using SFC 56 and SFC 57.

Table A- 32 Parameters of SM 332; AO 8 x 12 Bit

Parameters	Data record number	Programmable, using ...	
		... SFC 55	... PG
Diagnostics: Group diagnostics	0	no	yes
Diagnostics interrupt enable	1	yes	yes
Reaction to CPU STOP		yes	yes
Output type		yes	yes
Output range		yes	yes

Note

To enable diagnostics interrupts in the user program at data record 1, you first need to enable diagnostics at data record 0 in *STEP 7*.

Structure of data record 1

The figure below shows the structure of data record 1 for the parameters of SM 332; AO 8 x 12 Bit.

You enable diagnostics interrupts by setting a logic "1" at the corresponding bit of byte 0.

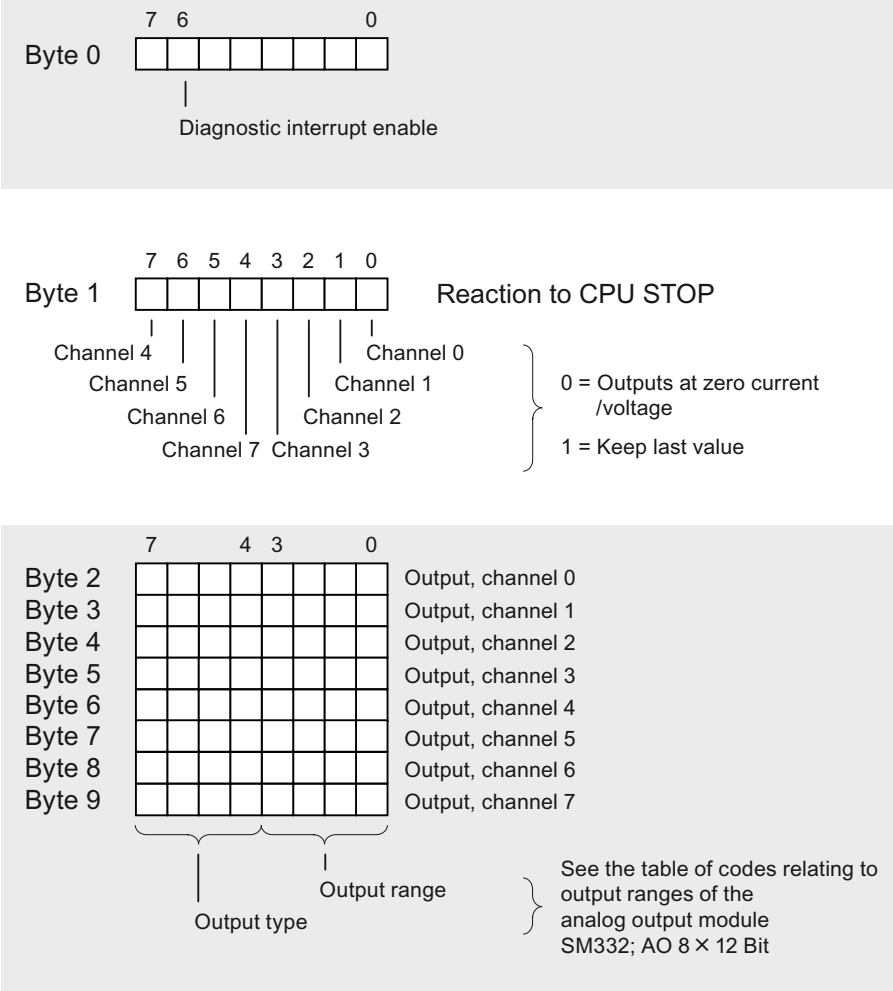

Bytes 10 to 13 are not occupied

Figure A-26 Data record 1 for the parameters of analog output modules

Output type and output range

The table lists the output types/ranges of SM 332; AO 8 x 12 Bit, including their codes. Enter these codes at bytes 2 to 9 in data record 1 (refer to the previous figure.)

Table A- 33 Output range codes of analog output module SM 332; AO 8 x 12 Bit

Output type	Code	Output range	Code
Disabled	2#0000	Disabled	2#0000
Voltage	2#0001	1 V to 5 V 0 V to 10 V ± 10 V	2#0111 2#1000 2#1001
Current	2#0010	0 mA to 20 mA 4 mA to 20 mA ± 20 mA	2#0010 2#0011 2#0100

A.14 Parameters of analog IO modules

Parameter

The table below lists all parameters you can set for analog IO modules.

The comparison illustrates the parameters you can edit:

- in *STEP 7*
- using SFC 55 "WR_PARM"

Parameters set in *STEP 7* can also be transferred to the module using SFC 56 and SFC 57 (refer to the *STEP 7* manuals).

Table A- 34 Parameters of analog IO modules

Parameters	Data record number	Programmable, using ...	
		... SFC 55	... PG
Measuring method	1	yes	yes
Measuring range		yes	yes
Integration time		yes	yes
Output type		yes	yes
Output range		yes	yes

Structure of data record 1

The figure below shows the structure of data record 1 for the parameters of analog IO modules.

You enable a parameter by setting a logic "1" at the corresponding bit of byte 0.

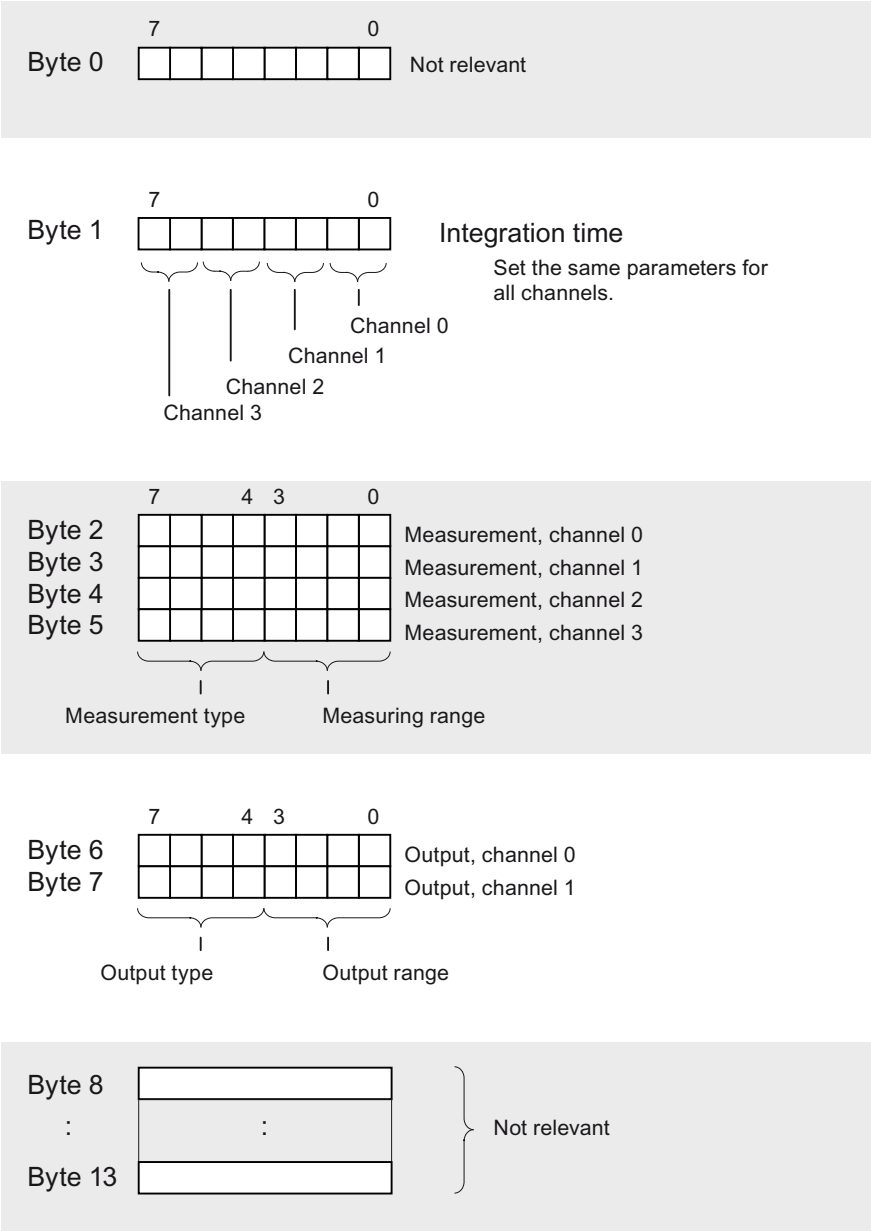

Figure A-27 Data record 1 for the parameters of analog IO modules

Measuring methods and ranges

The table below lists all measuring methods/ranges of analog IO modules, including their codes. Enter these codes at bytes 2 to 5 in data record 1 (refer to the previous figure.)

Table A- 35 Measuring range codes of analog IO modules

Measuring method	Code	Measuring range	Code
disabled	2#0000	disabled	2#0000
Voltage	2#0001	0 V to 10 V	2#1000
Resistance (4-wire connection)	2#0100	10 kΩ	2#1001
Thermal resistance + linearization 4-wire connection	2#1000	Pt 100 Klima	2#0000

Output types and output ranges

The table below lists all output types/ranges of analog IO modules, including their codes. Enter these codes at bytes 6 and 7 of data record 1 (refer to the previous figure.)

Table A- 36 Output range codes of analog IO modules

Output type	Code	Output range	Code
disabled	2#0000	disabled	2#0000
Voltage	2#0001	0 V to 10 V	2#1000

Diagnostics data of signal modules

B

B.1 Evaluating diagnostic data of signal modules in the user program

Introduction

This appendix describes the diagnostic data structure in system data. You should be sufficiently familiar with this structure if you want to evaluate the diagnostics data of the signal module in the *STEP 7* user program.

Diagnostics data are saved to data records

The diagnostics data for a module is stored in data records 0 and 1.

- Data record 0 contains 4 bytes of diagnostics data describing the current state of the module.
- Data record 1 contains the 4 bytes of diagnostics data also stored in data record 0, **plus** additional module-specific diagnostics data, which describes the status of a channel or a channel group.

Further references

For detailed information on the evaluation of the diagnostics data of signal modules in the user program and on corresponding SFCs, refer to the *STEP 7* manuals.

B.2 Structure and content of diagnostics data, byte 0 and up

Introduction

The section below describes the structure and content of the various bytes in diagnostics data. General rule: A fault is indicated by a logic "1" at the relevant bit.

Bytes 0 and 1 (data records 0 and 1)

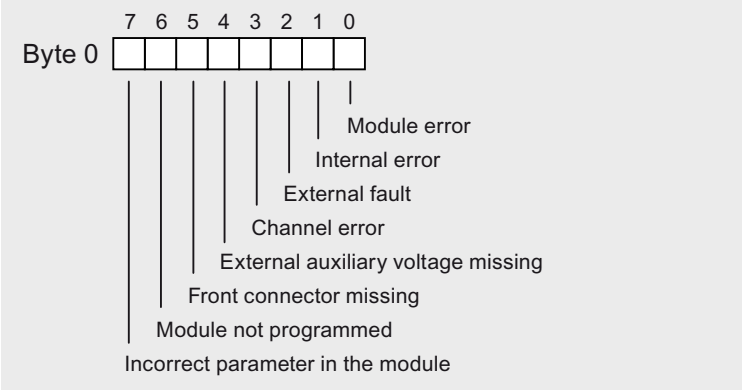

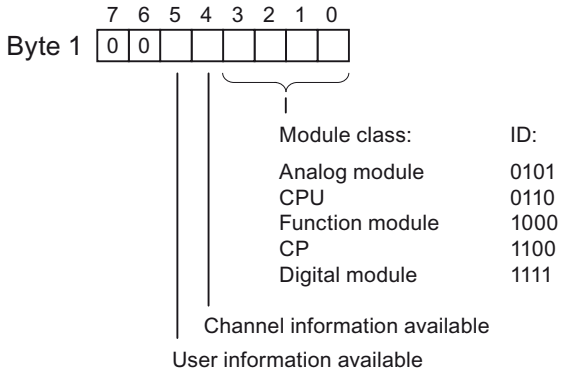

Figure B-1 Bytes 0 and 1 of diagnostics data

Bytes 2 and 3 (data records 0 and 1)

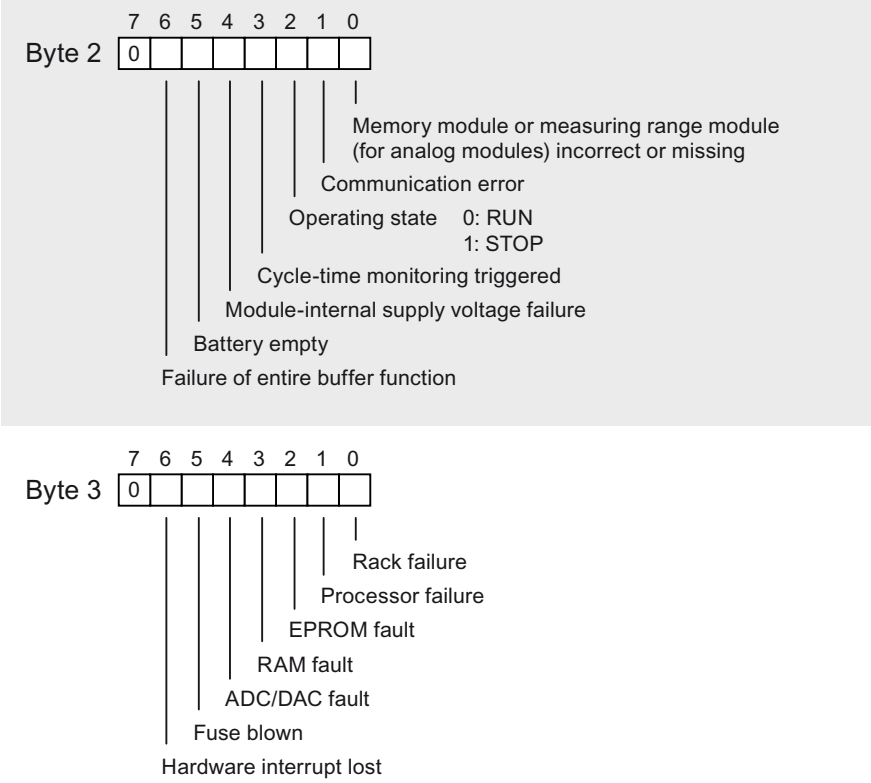

Figure B-2 Bytes 2 and 3 of diagnostics data

Bytes 4 to 6 info block (data record 1)

Bytes 4 to 6 form the info block, which contains information relating to the channel type, the length of the diagnostic information, and the number of channels.

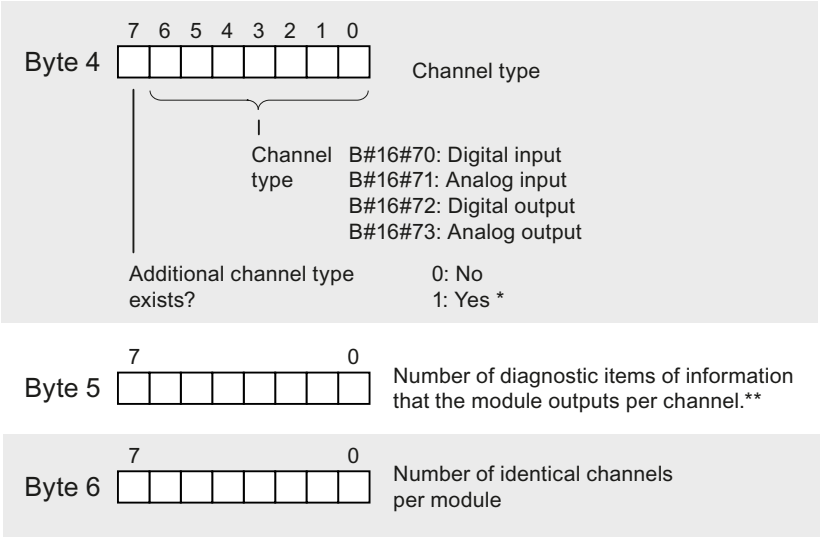

* When an additional channel type exists (bit 7 of the channel type = 1), the next channel type follows in data record 1, starting with the data type directly after the channel specific diagnostics data of the previous channel type.

** The number of bytes that are used per channel for the channel specific diagnostics data, corresponds to the number of bits specified here.

Figure B-3 Bytes 4 to 6 of diagnostics data

Byte 7 channel fault vector and up (data record 1)

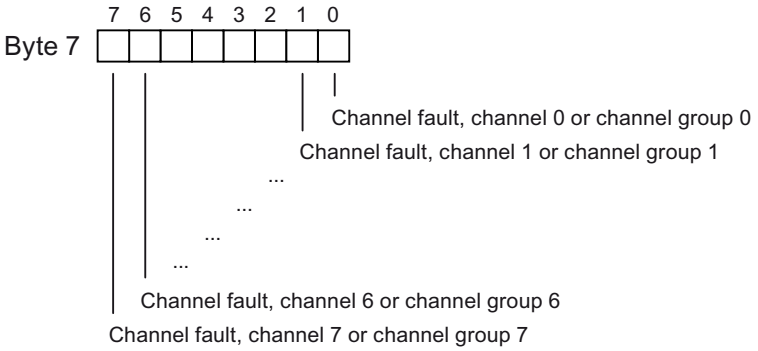

Figure B-4 Byte 7 of diagnostics data

The channel fault vector is at least 1 byte long. For modules with more than 8 channels, the channel fault vector occupies several bytes.

The channel-specific diagnostics data comes after the channel fault vector; refer to section Channel-specific diagnostics data (Page 614).

If another channel type is available (see Figure "Bytes 4 to 6 of diagnostics data"), the channel type with the same structure as that described above (channel type, length of diagnostics data, number of channels of the same type, channel fault vector, channel-specific diagnostics data of the channel type) follows after the channel-specific diagnostics data.

B.3 Channel-specific diagnostics data

Introduction

The channel-specific diagnostics data follows the channel fault vector. The number of bytes used for channel-specific diagnostics for each channel is based on the number of bits entered in byte 5 "length of diagnostic information".

The figures below show the assignment of the diagnostics byte of a module-specific channel or channel group. General rule: A fault is indicated by a logic "1" at the relevant bit.

You will find a description of possible causes of problems and appropriate remedies in the section titled "Diagnostics of the modules".

Digital input channel of SM 321; DI 16 x DC 24 V; with process and diagnostic interrupt

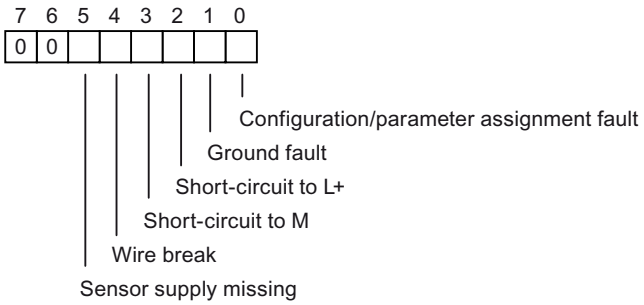

Figure B-5 Diagnostics byte for a digital input channel of SM 321; DI 16 x DC 24 V

Digital output channel of SM 322; DO 8 x DC 24 V/0.5 A; with diagnostic interrupt

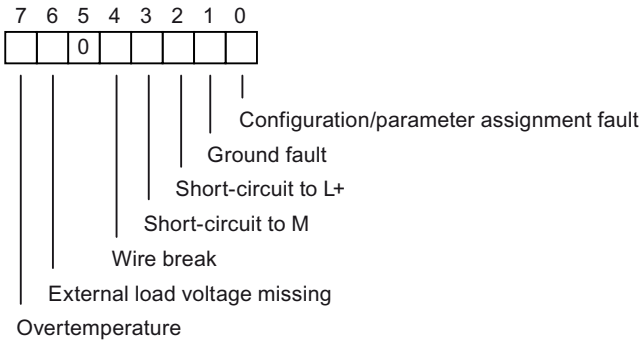

Figure B-6 Diagnostics byte for a digital output channel of SM 322; DO 8 x DC 24 V/0.5 A

Analog input channel of SM 331 modules with diagnostics functions

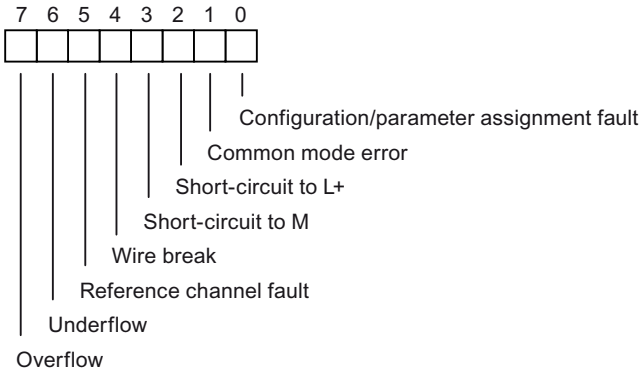

Figure B-7 Diagnostics byte of an analog input channel of an SM 331 module with diagnostics functions

Analog input channel of the SM 332 module with diagnostics functions

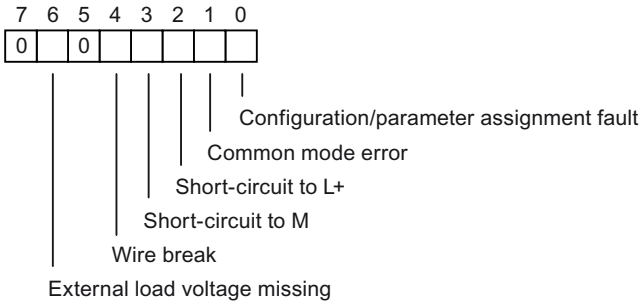

Figure B-8 Diagnostics byte of an analog input channel of an SM 332 module with diagnostics functions

B.4 Diagnosis data from the SM 322; DO 16 x DC24 V/0.5 A (6ES7322-8BH10-0AB0)

Introduction

The section below describes the structure and content of the various bytes in diagnostics data. In the bytoes 0...3, module errors are reported - errors that affect the entire module. Starting at byte 4, channel-specific errors are reported.

General rule: A fault is indicated by a logic "1" at the relevant bit.

Byte 0 to byte 3 (diagnostic data records 0 and 1)

Through entries in the diagnostic bytes byte 0 (bit 4...7) byte 2 and byte 3, module errors are reported, which cannot be turned off through the setting of the module.

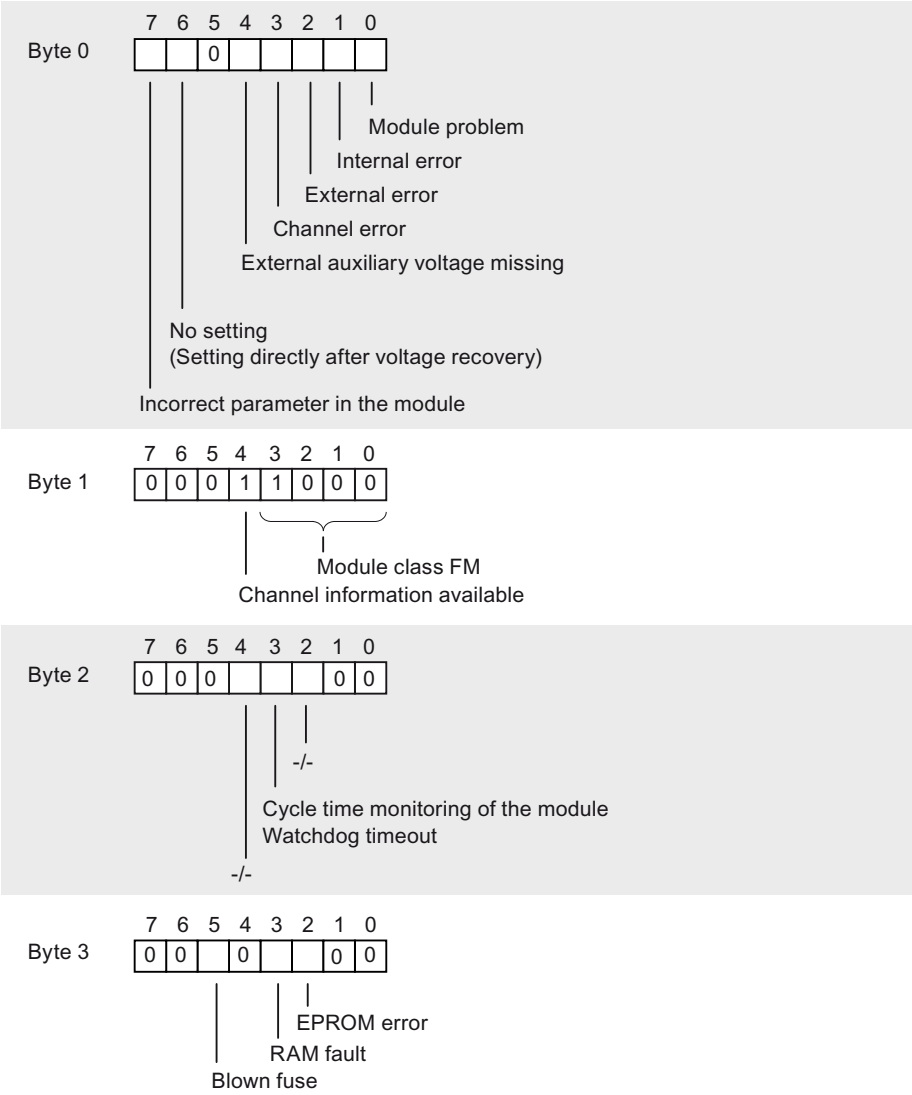

Byte 4 to byte 6 infoblock (diagnostic data record 1)

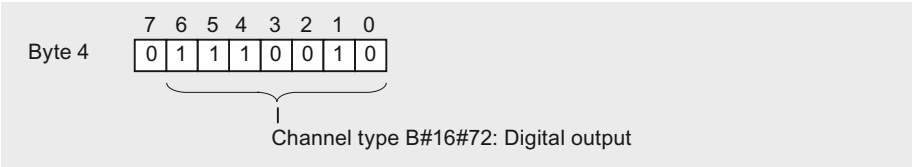

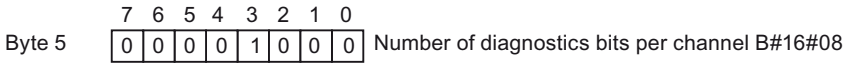

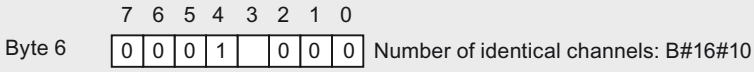

Byte 7 and 8 channel error vector (Diagnostic data record 1)

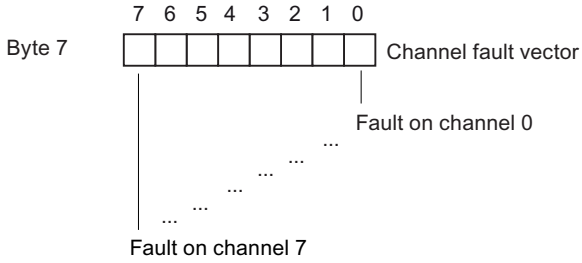

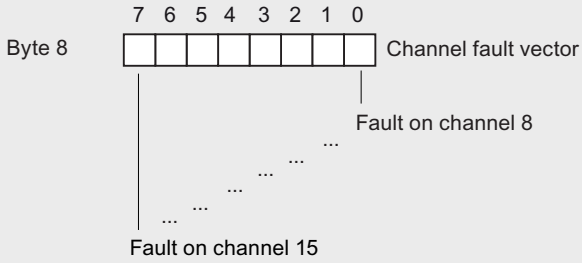

Byte 9 to byte 24 cable diagnostics (diagnostic data record 1)

Through byte 9 to byte 24 channel-specific errors are reported.

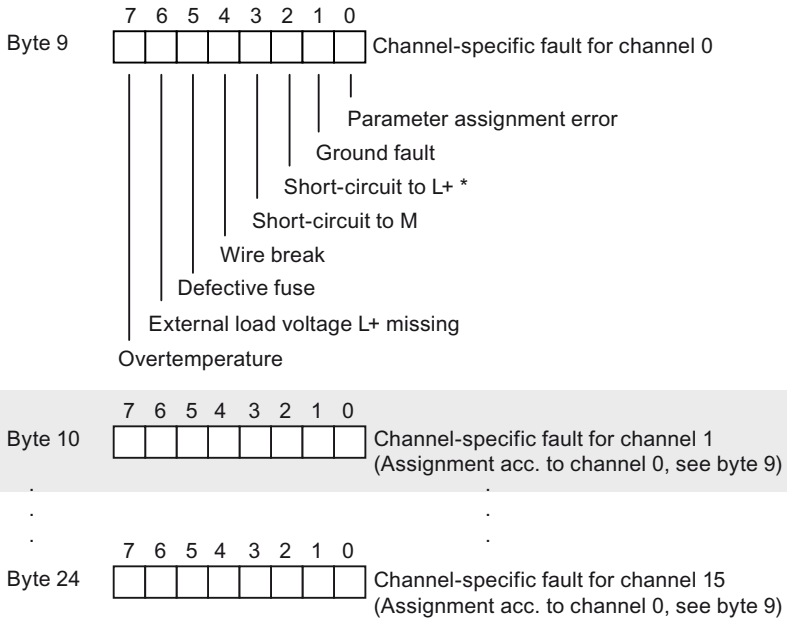

* Not with redundant use

B.5 Diagnostics data of SM 331; AI 6 x TC isolated

Introduction

The section below describes the structure and content of the various bytes in diagnostics data. General rule: A fault is indicated by a logic "1" at the relevant bit.

Byte 0 to byte 3 (diagnostic data records 0 and 1)

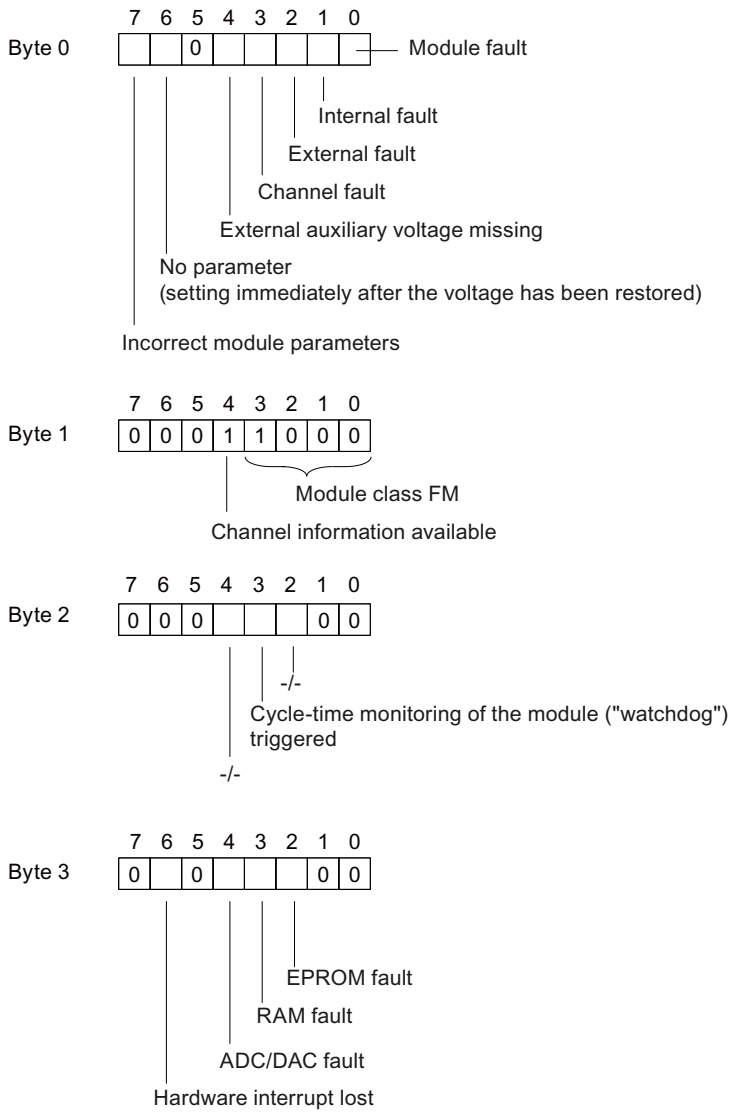

Figure B-9 Diagnostic data records 0 and 1

Byte 4 to byte 13 (diagnostic data record 1)

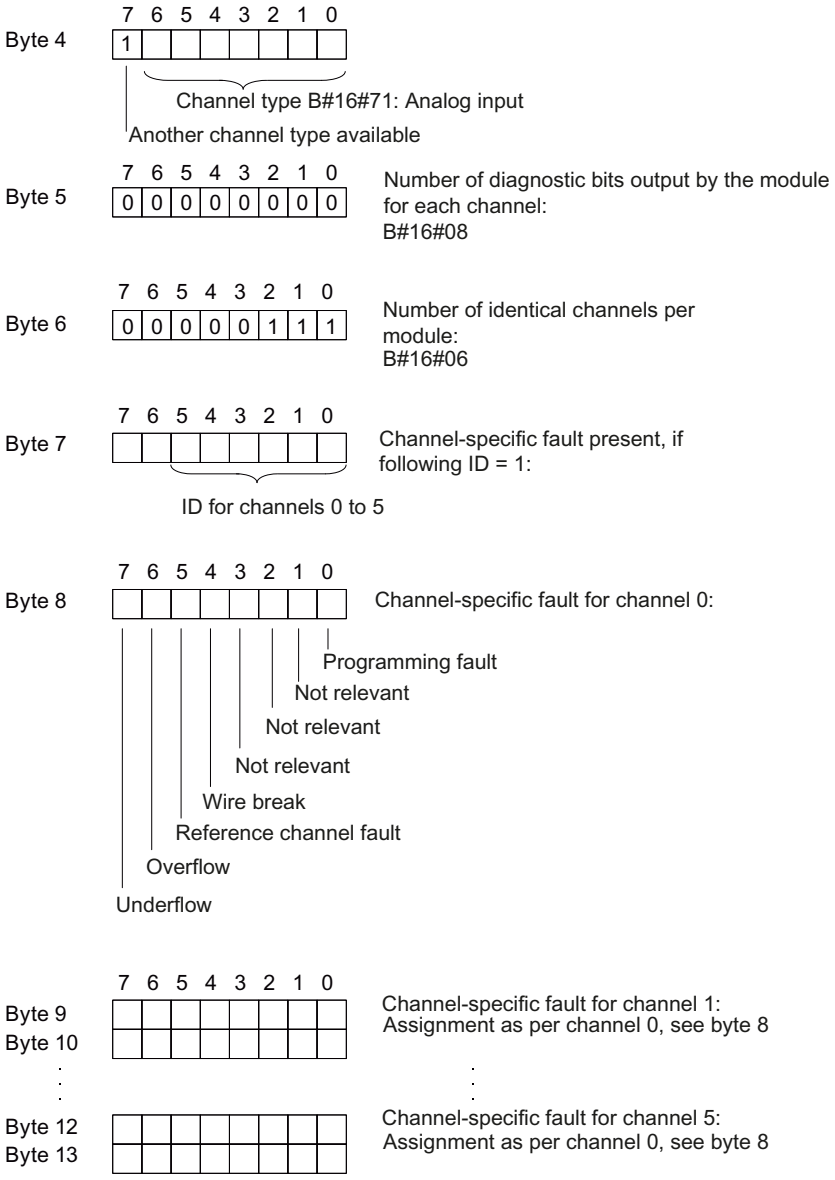

Figure B-10 Diagnostic data record 1

Byte 14 to byte 23 (diagnostic data record 1)

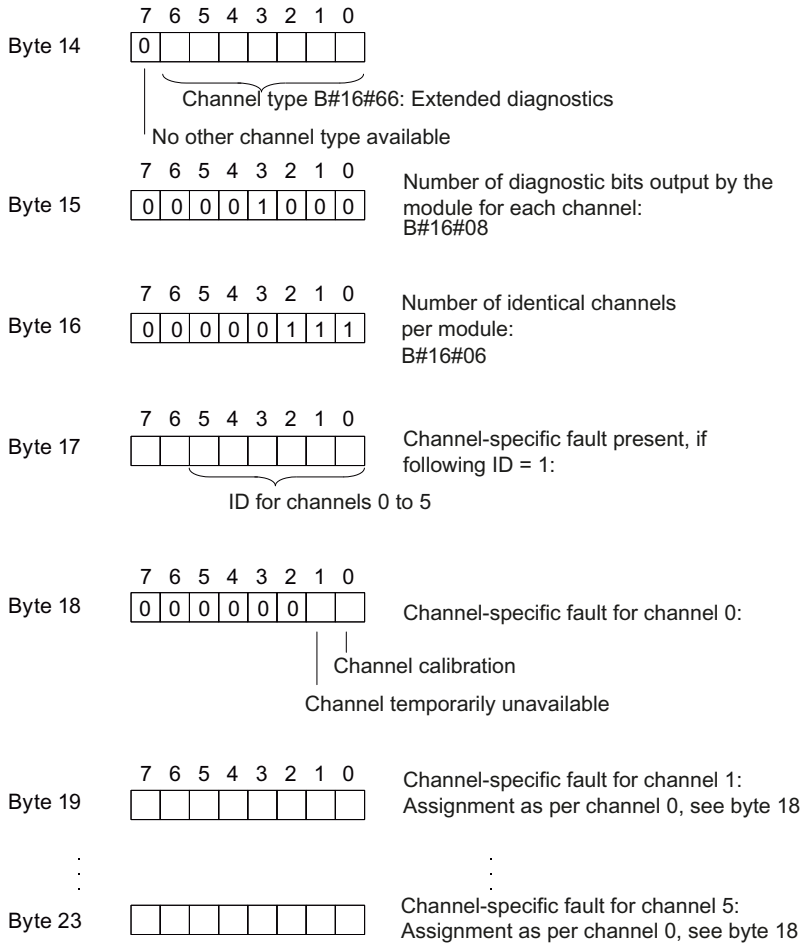

Figure B-11 Diagnostic data record 1 (continued)

B.6 Diagnostics data of SM 338; POS-INPUT

Introduction

The next section describes the structure and contents of the various bytes in diagnostic data of the position detection module SM 338; POS-INPUT. General rule: A fault is indicated by a logic "1" at the relevant bit.

You will find a description of possible causes of problems and appropriate remedies in the section titled *Position detection module SM 338; POS-INPUT*.

Bytes 0 and 1

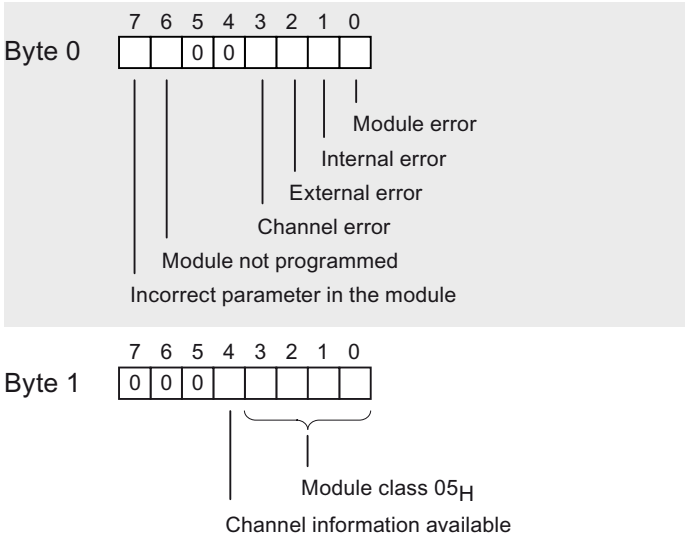

Figure B-12 Bytes 0 and 1 in diagnostics data of SM 338; POS-INPUT

Bytes 2 to 7

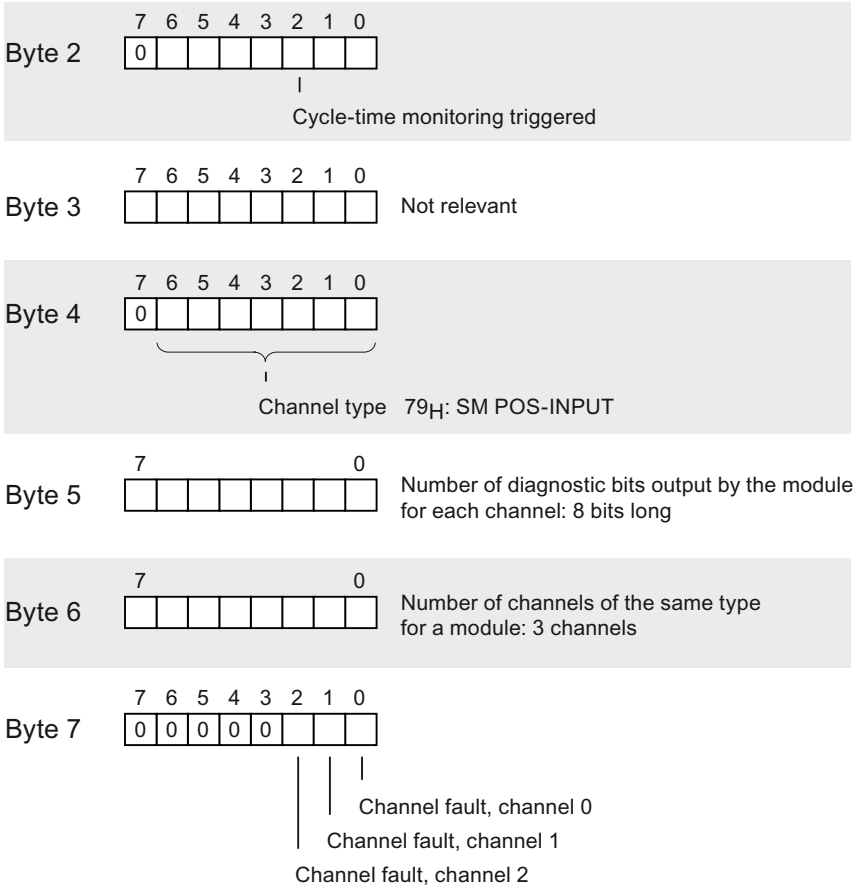

Figure B-13 Bytes 2 and 7 in diagnostics data of SM 338; POS-INPUT

Bytes 8 to 10

Data record 1 contains the channel-specific diagnostic data, starting at bytes 8 to 10. The figure below shows the assignment of the diagnostic byte for a channel of SM 338; POS-INPUT.

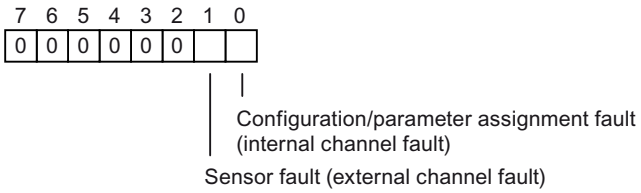

Figure B-14 Diagnostics byte for a channel of SM 338; POS-INPUT

Dimensional drawings

C

Introduction

This appendix contains the dimensional drawings of the most important components of an S7-300. The specified dimensions are required to determine the dimensions of an S7-300 configuration. Make allowances for the dimensions of an S7-300 configuration when you install the system in cabinets, control rooms, etc. This appendix does not include the dimensional drawings of S7-300 or M7-300 CPUs, or of IM 153-1. These are included in the relevant manuals.

Contents

This appendix contains the dimensional drawings of the S7-300 components listed below.

- Mounting rails
- Power supply modules
- Interface modules
- Signal modules
- Accessories

C.1 Dimensional drawings of the mounting rails

Standard mounting rail 483 mm

The figure below shows the dimensional drawing of the 483 mm standard rail.

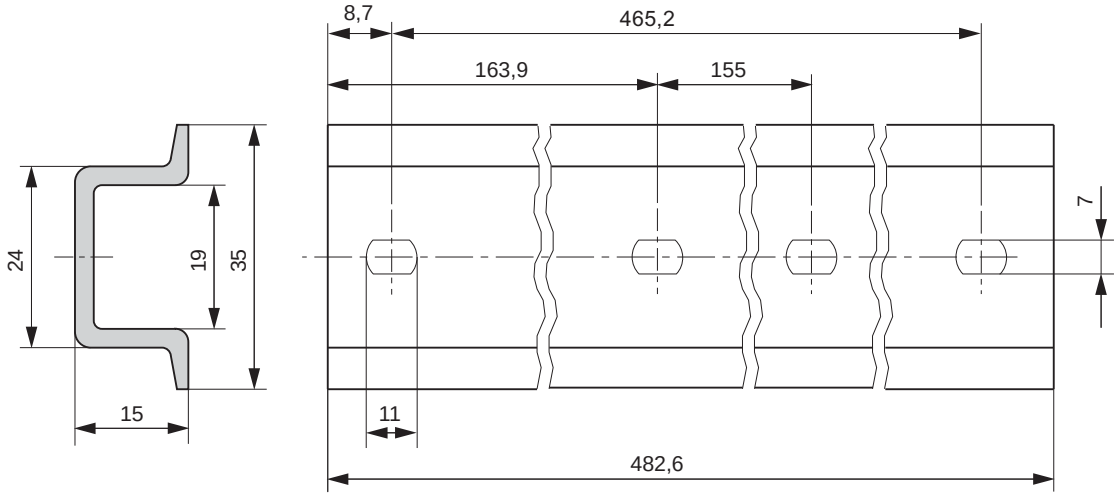

Figure C-1 Dimensional drawing of the 483 mm standard rail

Standard mounting rail 530 mm

The figure below shows the dimensional drawing of the 530 mm standard rail.

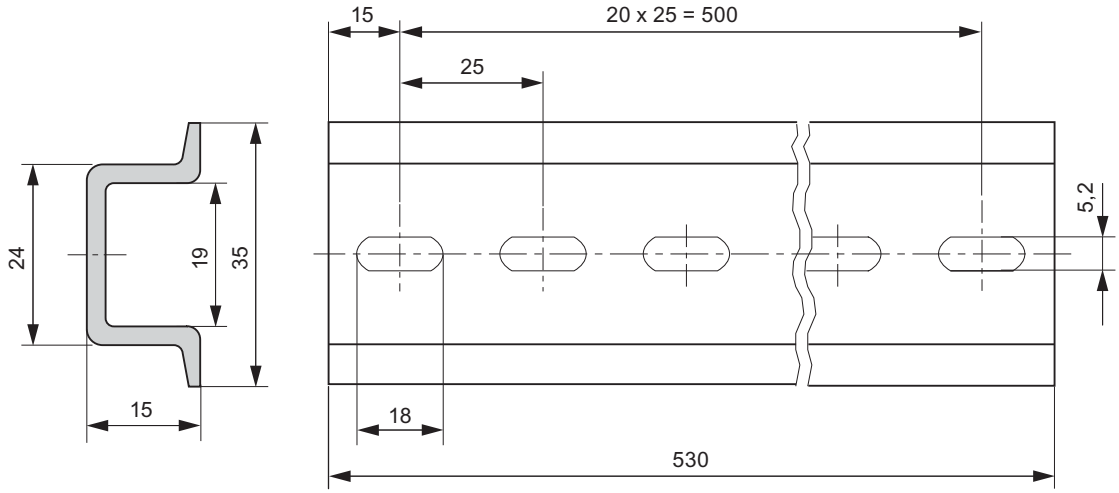

Figure C-2 Dimensional drawing of the 530 mm standard rail

Standard mounting rail 830 mm

The figure below shows the dimensional drawing of the 830 mm standard rail.

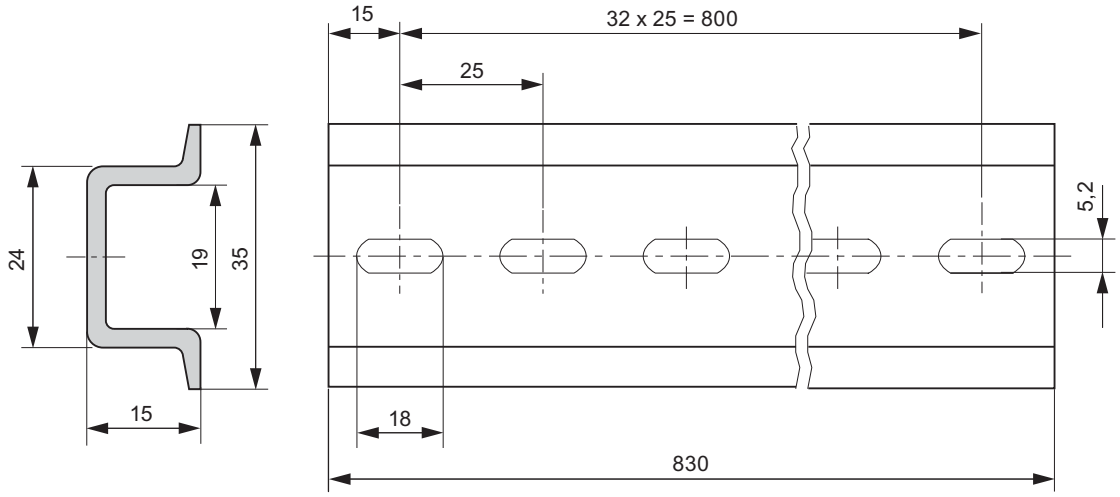

Figure C-3 Dimensional drawing of the 830 mm standard rail

Standard mounting rail 2000 mm

The figure below shows the dimensional drawing of the 2000 mm standard rail.

Figure C-4 Dimensional drawing of the 2000 mm standard rail

Mounting rail 160 mm

The figure below shows the dimensional drawing of the 160 mm mounting rail.

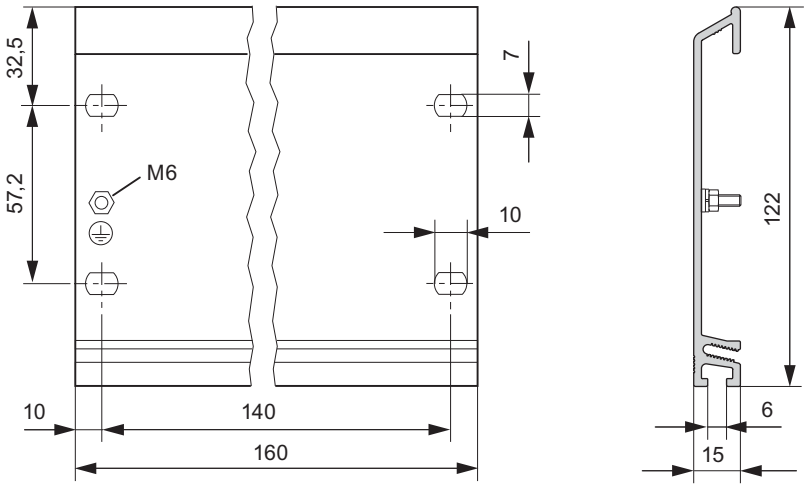

Figure C-5 Dimensional drawing of the mounting rail with standard width of 160 mm.

Mounting rail 482.6 mm

The figure below shows the dimensional drawing of the 482.6 mm mounting rail.

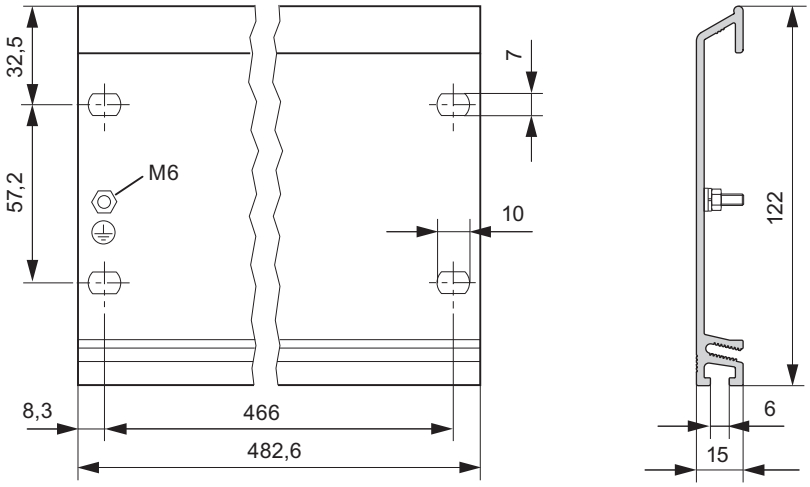

Figure C-6 Dimensional drawing of the mounting rail with standard width of 482.6 mm.

Mounting rail 530 mm

The figure below shows the dimensional drawing of the 530 mm mounting rail.

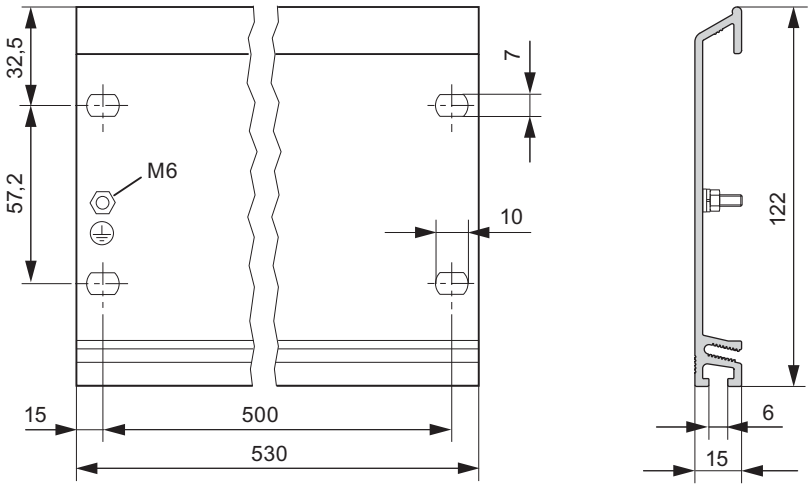

Figure C-7 Dimensional drawing of the mounting rail with standard width of 530 mm.

Mounting rail 830 mm

The figure below shows the dimensional drawing of the 830 mm mounting rail.

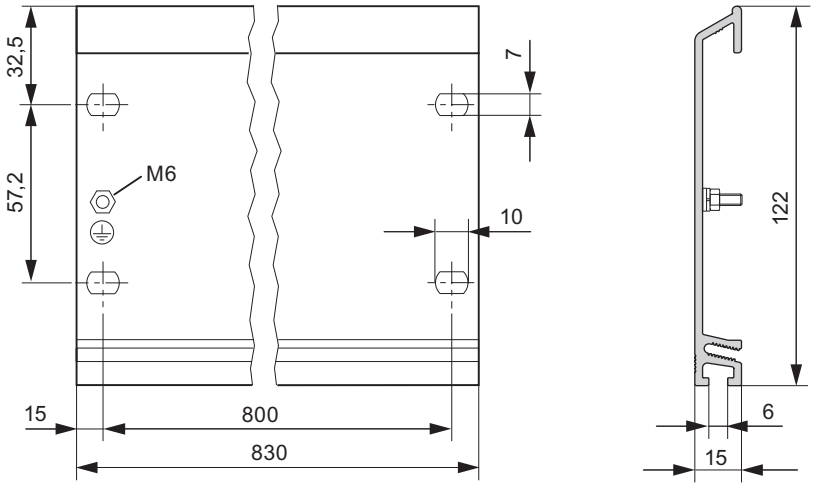

Figure C-8 Dimensional drawing of the mounting rail with standard width of 830 mm.

Mounting rail 2000 mm

The figure below shows the dimensional drawing of the 2000 mm mounting rail.

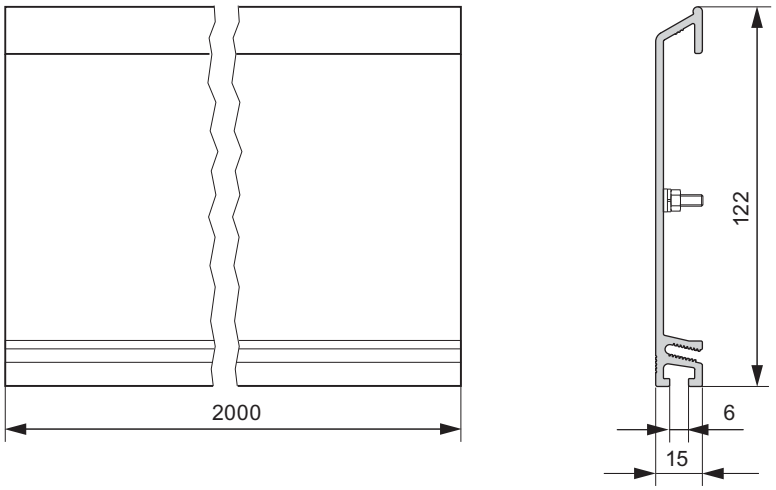

Figure C-9 Dimensional drawing of the 2000 mm mounting rail

Mounting rail for the "Insertion and Removal" function

The figure below shows the dimensional drawing of the mounting rail for the "Insertion and Removal" function with active bus module, S7-300 module and explosion-proof partition. The mounting rail has a length of 482.6 mm or 530 mm.

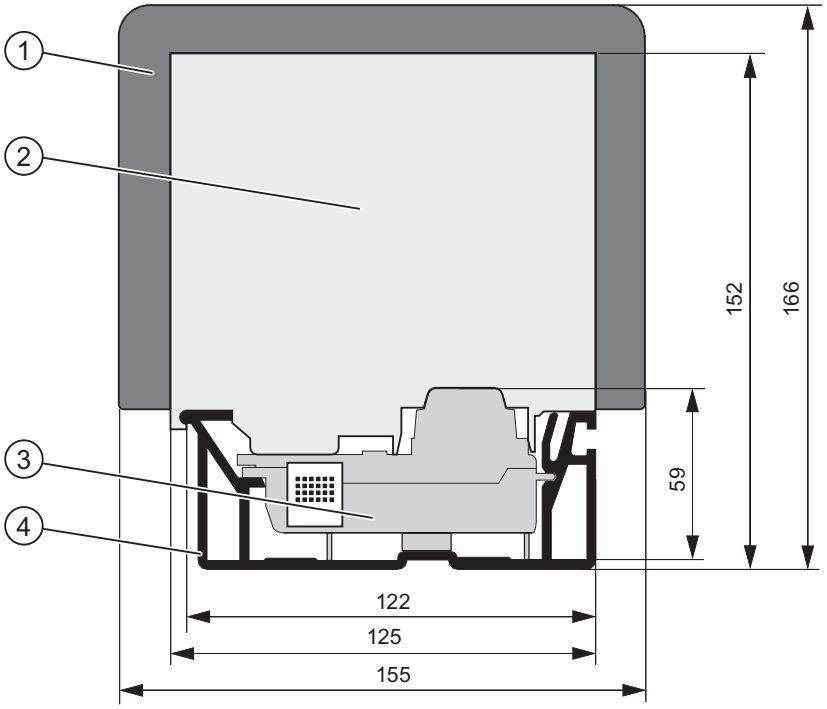

① Explosion-proof partition
② S7-300 module
③ active bus module
④ Mounting rail for the "Insertion and Removal" function

C.1.1 Bus modules

The figure below shows the dimension drawing of the active bus module for the "Insertion and Removal" function.

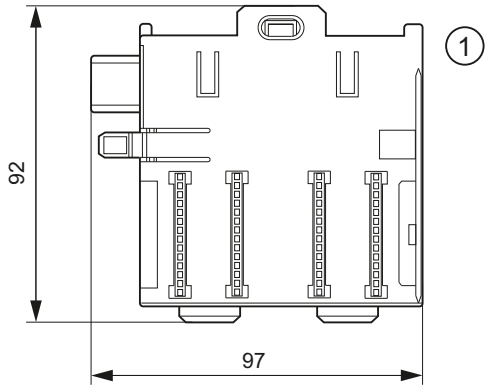

① Bus modules
BM PS/IM (...7HA)
BM IM/IM (...7HD)
BM 2 x 40 (...7HB)
BM 1 x 80 (...7HC)

C.2 Dimensional drawings of the power supply modules

PS 307 2 A

The drawing below shows the dimensions of power supply module PS 307; 2 A.

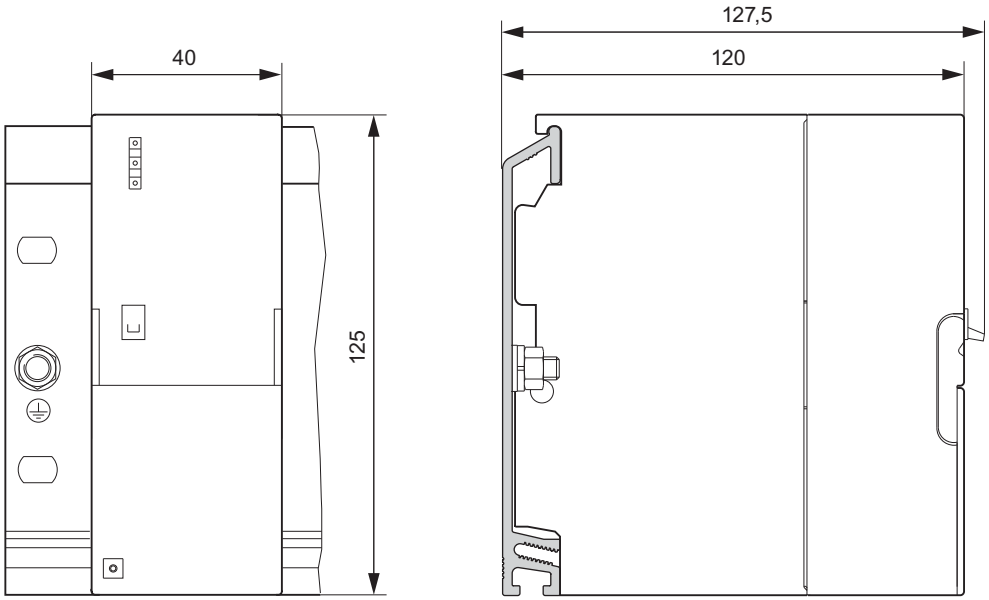

Figure C-10 Power supply module PS 307; 2 A

PS 307 5 A (6ES7307-1EA01-0AA0)

The drawing below shows the dimensions of power supply module PS 307; 5 A.

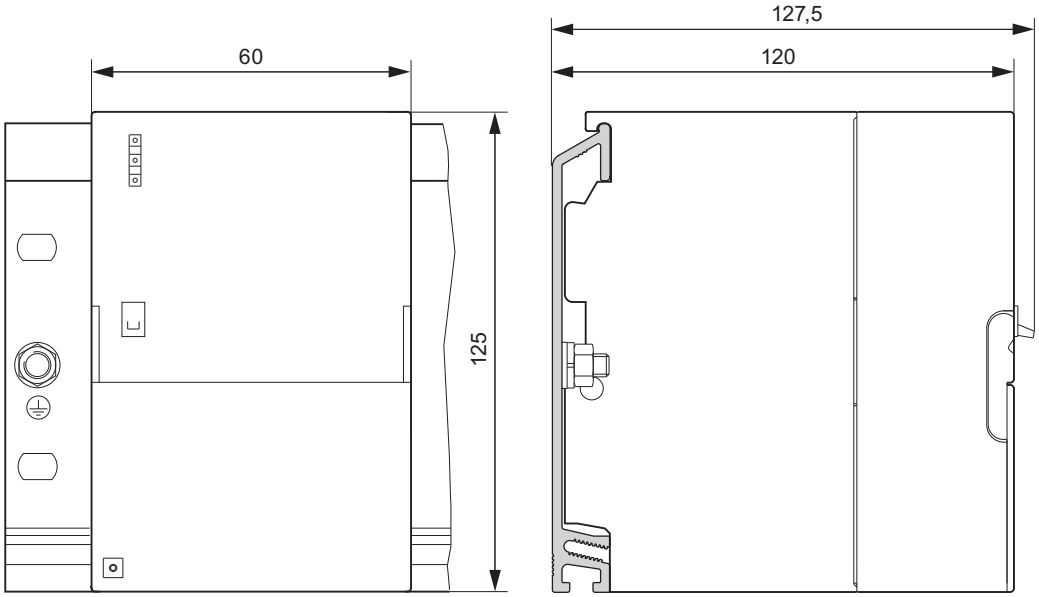

Figure C-11 Power supply module PS 307; 5 A

PS 307; 10 A with 313/314/315/ 315-2 DP CPU

The figures below show the dimensional drawings of a configuration consisting of a power supply module PS 307; 10 A and a 313/314/315/315-2 DP CPU. Observe the dimensions derived from the use of a power connector when wiring the PS 307; 10 A to the CPU.

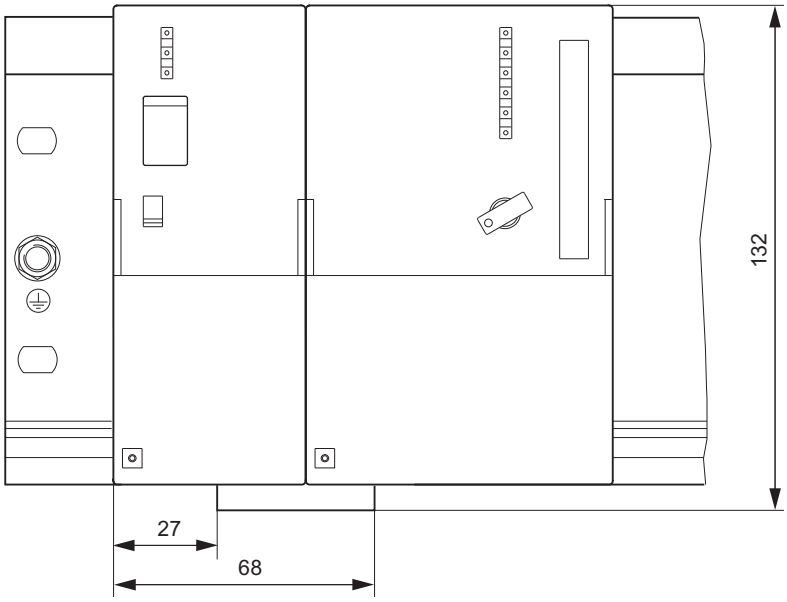

Figure C-12 Dimensional drawing of power supply module PS 307; 10 A with CPU 313/314/315/315-2 DP, front view

PS 307; 10 A with 313/314/315/ 315-2 DP CPU

The side view drawing below shows the dimensions of power supply module PS 307; 10 A with 313/314/315/315-2 DP CPU.

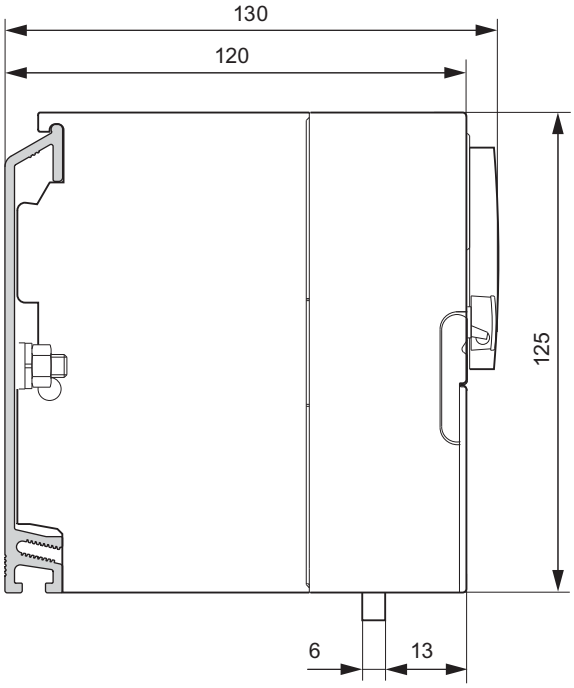

Figure C-13 Dimensional drawing power supply module PS 307; 10 A with CPU 313/314/315/315-2 DP, side view

PS 305 2 A, PS 307 5 A (6ES7307-1EA80-0AA0) and PS 307 10 A

The following image shows the drawing of the power supply modules PS 305; 2 A, PS 307 5 A and PS 307; 10 A.

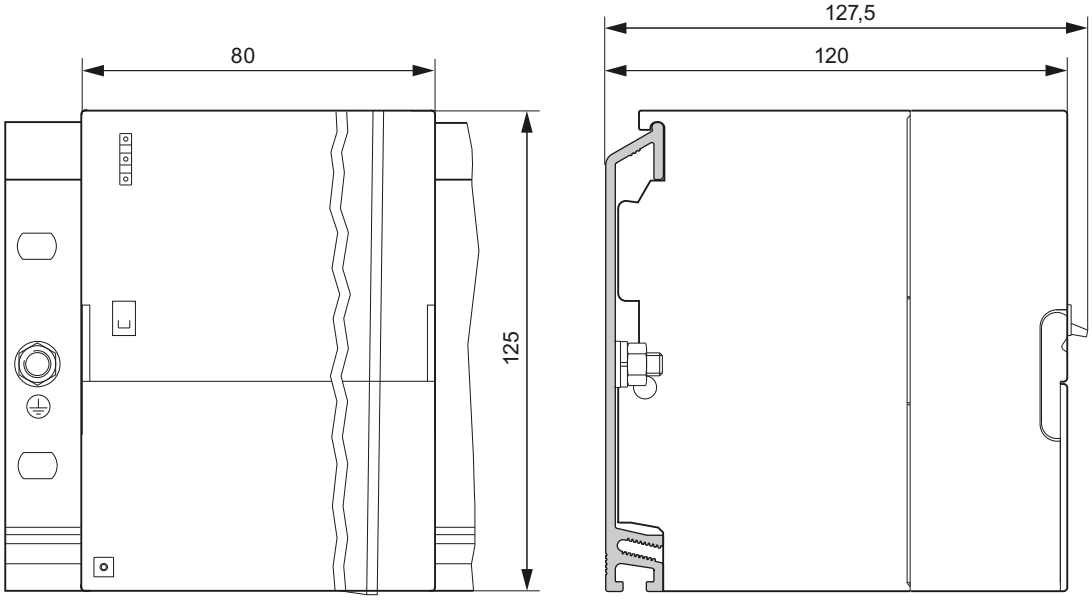

Figure C-14 Power supply module PS 307; 10 A

C.3 Dimensional drawings of the interface modules

IM 360

The figure below shows the dimensional drawing of interface module IM 360.

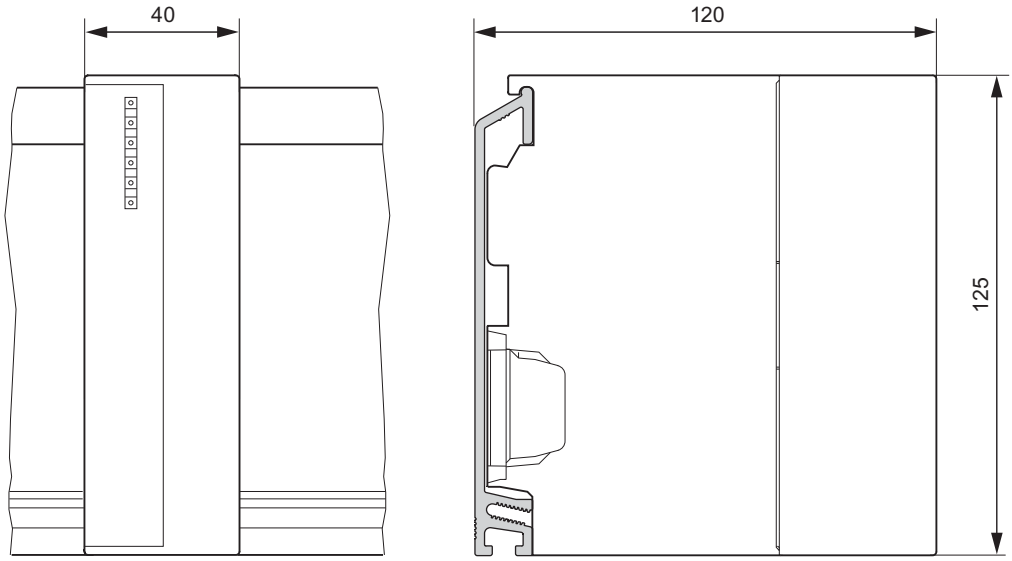

Figure C-15 Interface module IM 360

IM 361

The figure below shows the dimensional drawing of interface module IM 361.

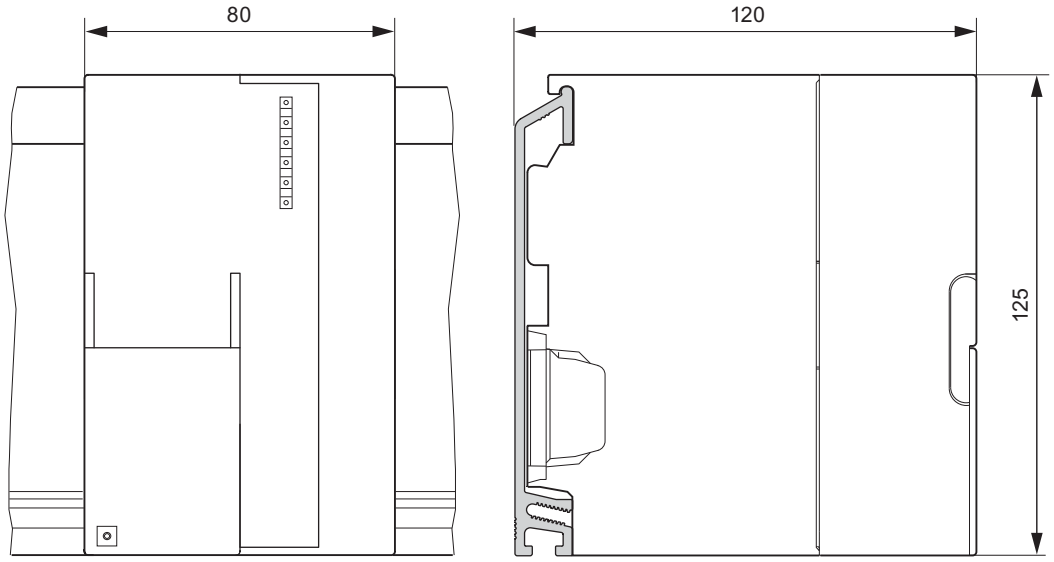

Figure C-16 Interface module IM 361

IM 365

The figure below shows the dimensional drawing of interface module IM 365.

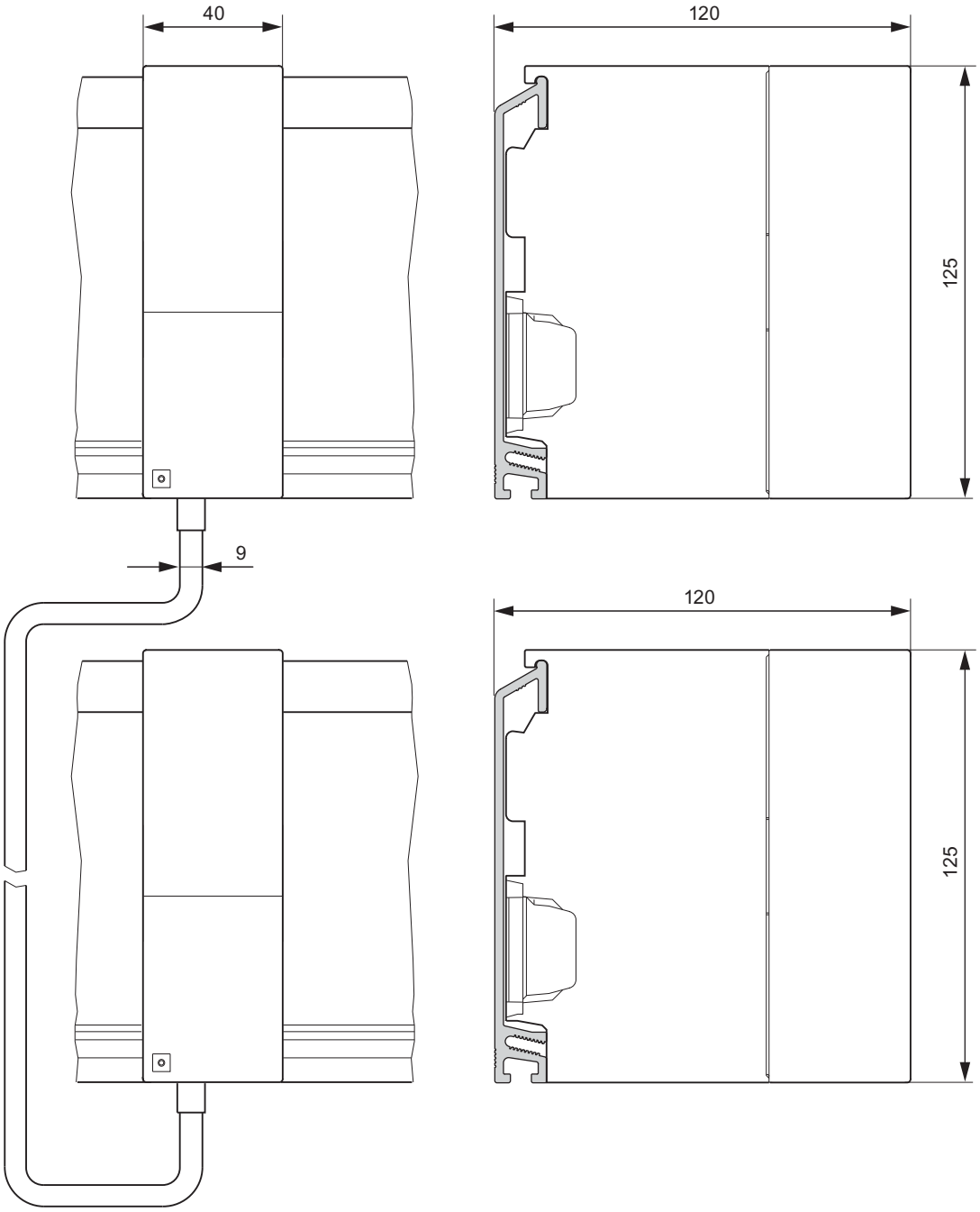

Figure C-17 Interface module IM 365

C.4 Dimensional drawings of the signal modules

Signal module

The figure below shows the dimensional drawing of the signal module.
The signal module design may differ. The specified dimensions are always the same.

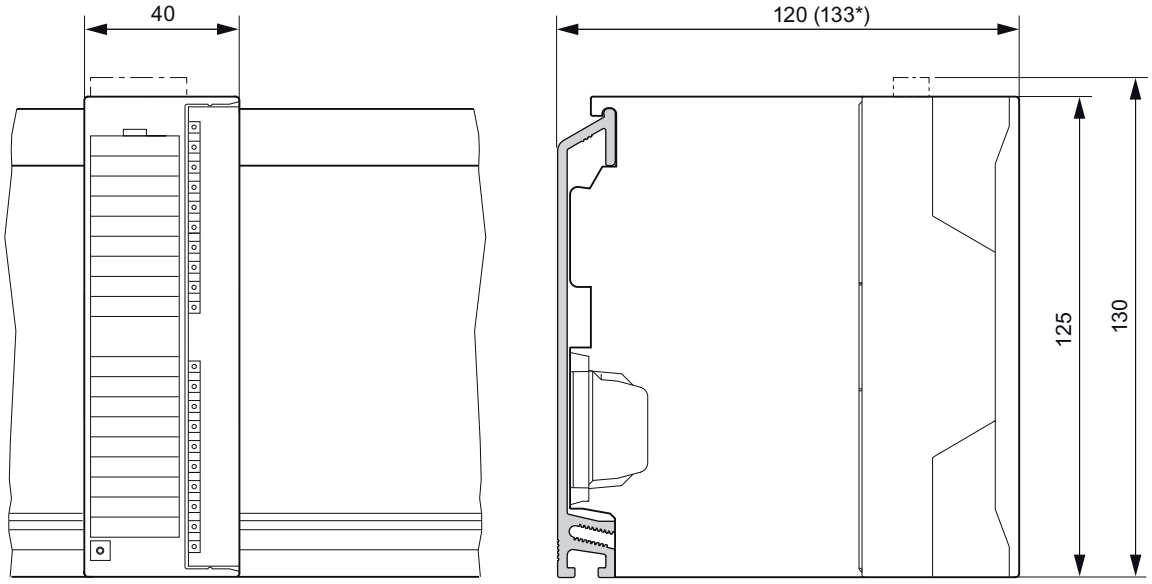

* With front door, elevated design

Figure C-18 Signal module

64-channel signal module

The figure below shows the dimension drawing for 64-channel I/O modules.

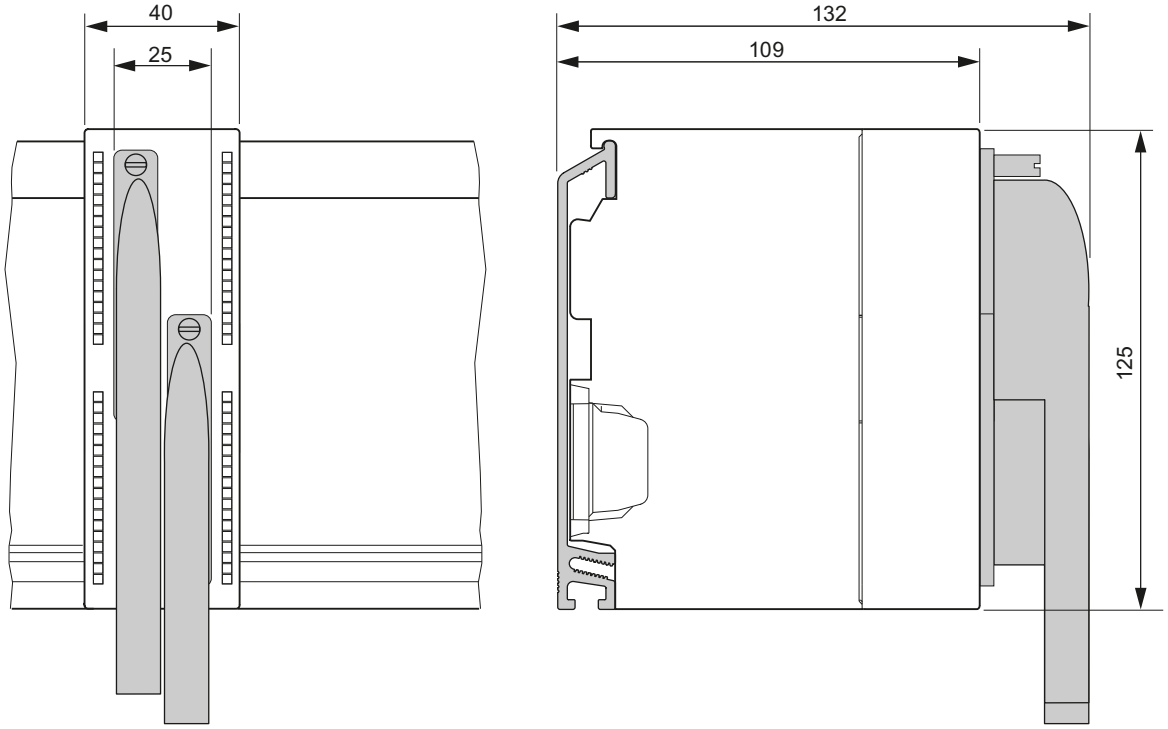

Figure C-19 64-channel signal module

C.5 Dimensional drawings of accessories

Shield connection element

The figure below shows the dimensional drawing of the shield connecting element used two signal modules.

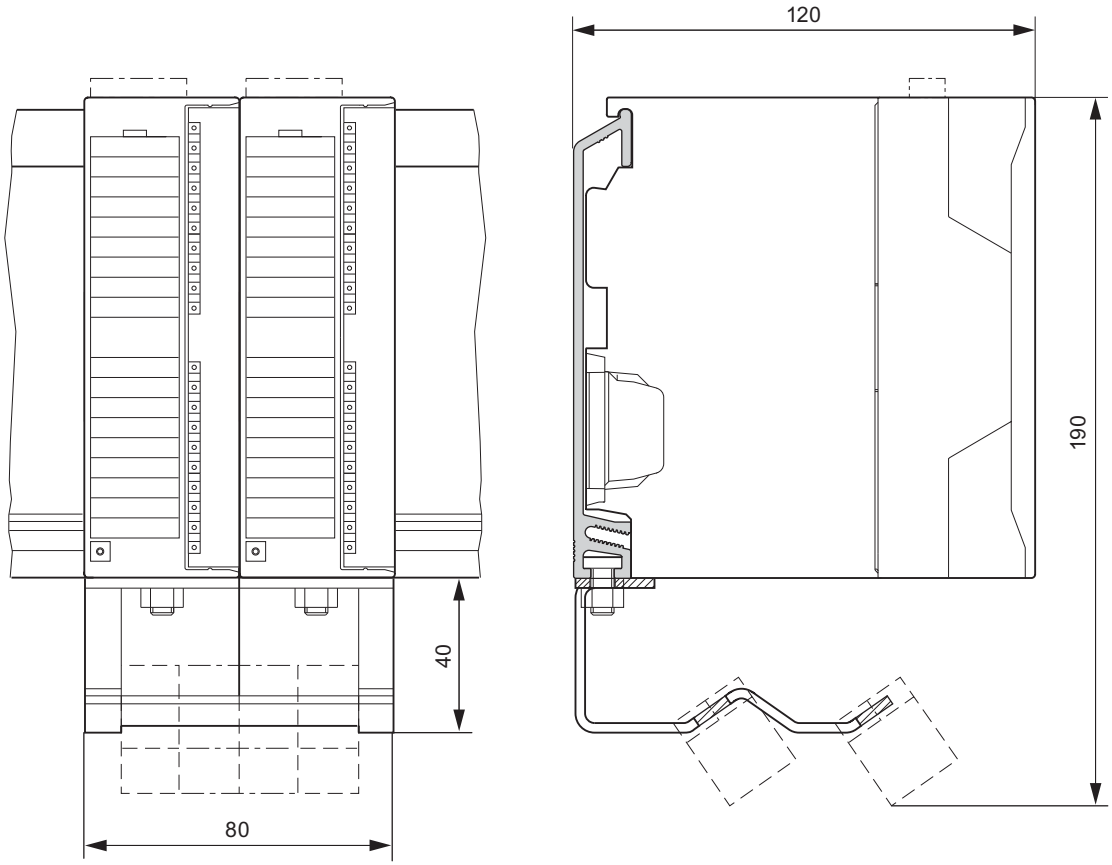

Figure C-20 2 signal modules with shield connecting element

40-pin terminal block

The figure below shows the dimension drawing of the 40-pin terminal block for 64-channel signal modules.

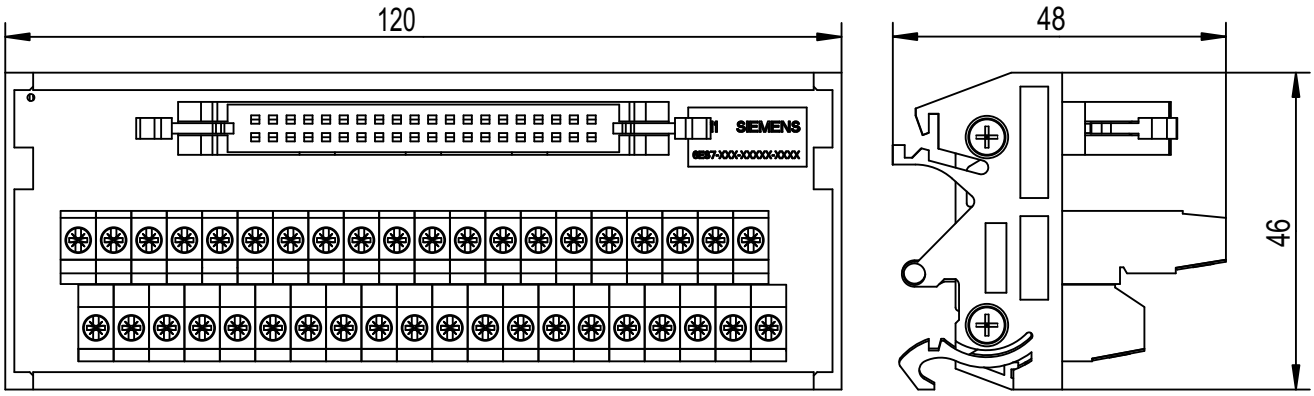

Figure C-21 40-pin terminal block

Spare parts and accessories for S7-300 modules

D

Spare parts

The table below lists the S7-300 parts you can order separately or later.

Table D- 1 Accessories and spare parts

S7-300 parts	Order number
Bus connector	6ES7390-0AA00-0AA0
Connection comb between power supply and CPU (older generation, before 2003)	6ES7390-7BA00-0AA0
Labeling strips for • Modules with 20-pin front connector: – (petrol) – (light beige) – (yellow) – (red)	 6ES7392-2AX00-0AA0 6ES7392-2BX00-0AA0 6ES7392-2CX00-0AA0 6ES7392-2DX00-0AA0
Labeling strips for • Modules with 40-pin front connector: – (petrol) – (light beige) – (yellow) – (red)	 6ES7392-2AX10-0AA0 6ES7392-2BX10-0AA0 6ES7392-2CX10-0AA0 6ES7392-2DX10-0AA0
• Instructions for printing labeling strips using print templates	On the Internet (http://www.siemens.com/automation/service&support) Entry ID: 11978022
Slot number plate	6ES7912-0AA00-0AA0
Front connector 20-pin • Screw terminal technology (1 unit) • Screw technology (100 units) • Spring clamp technology (1 unit) • Spring clamp technology (100 units)	 6ES7392-1AJ00-0AA0 6ES7392-1AJ00-1AB0 6ES7392-1BJ00-0AA0 6ES7392-1BJ00-1AB0
Front connector 40-pin • Screw technology (1 unit) • Screw technology (100 units) • Spring clamp technology (1 unit) • Spring clamp technology (100 units)	 6ES7392-1AM00-0AA0 6ES7392-1AM00-1AB0 6ES7392-1BM01-0AA0 6ES7392-1BM01-1AB0

S7-300 parts	Order number
Front connector for 2 ribbon cable connections • screw terminal technology • Spring clamp technology	 6ES7921-3AB00-0AA0 6ES7921-3AA00-0AA0
Front connector for 4 ribbon cable connections • Spring clamp technology	 6ES7921-3AA20-0AA0
Round-sheath ribbon cable (16-pole) • Unshielded 30 m • Unshielded 60 m • Shielded 30 m • Shielded 60 m	 6ES7923-0CD00-0AA0 6ES7923-0CG00-0AA0 6ES7923-0CD00-0BA0 6ES7923-0CG00-0BA0
Connectors, 16-pin, set of 8 (insulation displacement terminals)	6ES7921-3BE10-0AA0
Shield connection element	6ES7390-5AA00-0AA0
Shield terminal element for • 2 cables, each with a shield diameter of 2 to 6 mm • 1 cable with a shield diameter of 3 to 8 mm • 1 cable with a shield diameter of 4 to 13 mm	 6ES7390-5AB00-0AA0 6ES7390-5BA00-0AA0 6ES7390-5CA00-0AA0
Measuring range module for analog modules	6ES7974-0AA00-0AA0
Fuse set for digital output modules - 6ES7322-1FF01-0AA0 - 6ES7322-1FH00-0AA0 - 6AG1322-1FF01-2AA0 (contains 10 fuses and 2 fuse holders)	6ES7973-1HD00-0AA0
Fuse set for digital output module • 6ES7322-1CF00-0AA0 (contains 10 fuses)	6ES7973-1GC00-0AA0
Connecting cable for IM 360 and IM 361, or IM 361 and IM 361 • 1 m • 2.5 m • 5 m • 10 m	 6ES7368-3BB01-0AA0 6ES7368-3BC51-0AA0 6ES7368-3BF01-0AA0 6ES7368-3CB01-0AA0
Connecting cable between the 64-channel modules: SM 321, 6ES7321-1BP00-0AA0 sinking/sourcing, SM 322, 6ES7322-1BP00-0AA0 sourcing, SM 322, 6ES7322-1BP50-0AA0 sinking and 40-pin terminal block (screw terminal, spring clamp technology) • 1.0 m • 2.5 m • 5.0 m	 6ES7392-4BB00-0AA0 (2 units) 6ES7392-4BC50-0AA0 (2 units) 6ES7392-4BF00-0AA0 (2 units)

S7-300 parts	Order number
Terminal block 40-pin for 64-channel modules • Screw terminal technology • Spring clamp technology	6ES7392-1AN00-0AA0 (2 units) 6ES7392-1BN00-0AA0 (2 units)
Front door, elevated design for 32-channel modules (5 units) incl. labeling strips and connection diagram	6ES7328-0AA00-7AA0

Information about front connector selection

Your can find more information on front connector selection for the various SIMATIC S7-300 modules on the Internet (http://support.automation.siemens.com/WW/view/en/23060726).

Directive on handling Electrostatic-Sensitive Devices (ESD)

E

Introduction

In this appendix, we explain

- the meaning of "electrostatic-sensitive devices"
- the precautions you must take when handling and working with electrostatic sensitive modules.

E.1 Definition of ESD

Definition

All electronic modules are equipped with large-scale integrated ICs or components. Due to their design, these electronic elements are highly sensitive to overvoltage, and thus to any electrostatic discharge.

These **E**lectrostatic **S**ensitive **D**devices/**M**odules are commonly abbreviated **ESD**. The common international designation **ESD** stands for **E**lectrostatic **S**ensitive **D**evice.

ESD modules are identified by the following symbol:

CAUTION

ESD devices can be destroyed by voltages well below the threshold of human perception. These static voltages develop when you touch a component or electrical connection of a device without having drained the static charges present on your body. The electrostatic discharge current may lead to latent failure of a module, that is, this damage may not be significant immediately, but in operation may cause malfunction.

E.2 Electrostatic charging of the body

Electrostatic charging

Any person with a non-conductive connection to the electrical potential of its surroundings may be exposed to electrostatic charge.

The figure below shows the maximum electrostatic voltage which may build up on a person coming into contact with the materials indicated. These values correspond to IEC 801-2 specifications.

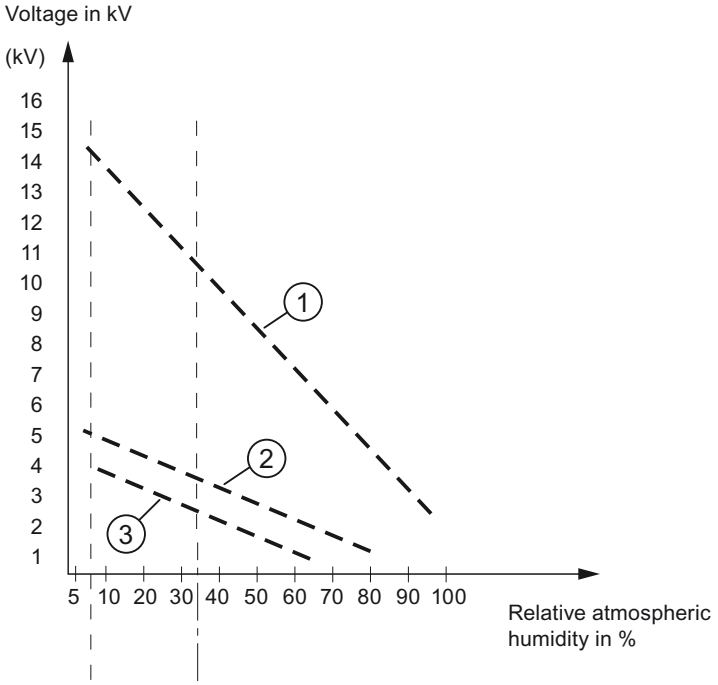

① Synthetic material
② Wool
③ antistatic materials, such as wood or concrete

E.3 Basic protective measures against electrostatic discharge

Ensure sufficient grounding

Make sure all persons, workplaces and packaging are sufficiently grounded when handling ESD components. This prevents electrostatic charge.

Avoid direct contact

You should only touch ESD components if unavoidable (for example, during maintenance work). Handle the modules without touching any chip pins or PCB traces. In this way, the discharged energy can not affect the sensitive devices.

Discharge your body before you start taking any measurements on a module. Do so by touching grounded metallic parts. Always use grounded measuring instruments.

Service & support

F

F.1 Service & support

Technical support

You can contact Technical Support for all Industry Automation products by means of the Internet Web form for the Support Request on the Internet (http://www.siemens.com/automation/support-request)

Additional information on our technical support is available on the Internet (http://www.siemens.com/automation/service).

Service & support on the Internet

In addition to our documentation, we offer a comprehensive knowledge base on the Internet.

On the Internet (http://www.siemens.com/automation/service&support).

There you will find:

- Our Newsletter, which constantly provides you with the latest information about your products.
- The documents you require, via our service & support search facility.
- A forum, where users and experts from all over the world exchange their experiences.
- Your local contact for Automation & Drives from our contact database.
- Information about on-site service, repairs, spare parts, and much more.

Additional support

If you have any questions relating to the products described in this manual and cannot find the answers in this documentation, please contact your Siemens partner at the appropriate office or sales and service location.

The contact details for your partner are available on the Internet (http://www.automation.siemens.com/partner/).

A guide to the technical documentation provided for the various SIMATIC products and systems is available on the Internet (http://www.siemens.com/simatic-tech-doku-portal).

The online catalog and order system is available on the Internet (http://www.siemens.com/automation/mall).

Training center

Siemens offers various courses to get you started with the S7-300 and the SIMATIC S7 automation system. Please contact your regional training center or the central training center in Nuremberg (ZIP code: 90327).
Additional information is available on the Internet (http://www.siemens.com/sitrain).

List of abbreviations

G

G.1 List of abbreviations

Abbreviations	Explanations
AC	Alternating current
ADC	Analog-to-Digital Converter
AI	Analog input
AO	Analog output
AS	Automation system
COMP+ / -	Compensation line (positive / negative)
CP	Communications processor
CPU	Central Processing Unit of the PLC
DAC	Digital-to-Analog Converter
DB	Data block
DC	Direct current
DI	Digital input
DO	Digital output
ESD	Electrostatic sensitive devices
EMC	Electromagnetic Compatibility
EPROM	Erasable Programmable Read-Only Memory
SSV	Set substitution value
FB	Function block
FC	Function
FEPROM	Flash Erasable Programmable Read-Only Memory
ES	Encoder supply
I+	Measuring line for current input
I_C+ / -	Constantcurrent line (positive negative)
KV+ / -	Cold spot comparison (positive / negative)
L+	Power supply 24 VDC
HLV	Hold last valid value
FOC	Fiber-optic conductor
M	Ground
M+ / -	Measuring line (positive / negative)
M_{ANA}	Reference potential of the analog measuring circuit
MPI	Multipoint interface
OB	Organization block

Abbreviations	Explanations
OP	Operator panel
OS	Operator system
P5V	Power supply for module logic
PIO	Process Image of Outputs
PII	Process Image of Inputs
PG	Programming device
PS	Power supply
Q_I:	Analog output current
Q_V:	Analog output voltage
RAM	Random Access Memory
R_L:	Load impedance
S + / -	Sensor line (positive / negative)
SF	"Group error" LED
SFB	System function block
SFC	System function
SM	Signal module
PLC	Programmable logic controller
SSI	Synchronous serial interface
TD	HMI (Text Display)
U+	Measuring line for voltage input
CMV	Common Mode Voltage
Viso	Potential difference between M_{ANA} and local ground
sign	Sign

Glossary

2-/3-/4-wire connection

Methods of connecting resistance thermometers / resistances to the front connector of the module, or loads to the voltage output of an analog input module.

2-wire transducer (passive sensor) / 4-wire transducer (active sensor)

Type of transducer (2-wire transducers: power supply via terminals of the analog input module; 4-wire transducers: power supply via separate terminals of the transducer.)

Absolute encoder

Determines the distance traveled by reading a numerical value: When using absolute encoders with serial interface (SSI), the path information is transferred synchronously and serially according to the SSI protocol (synchronous serial interface).

Address

Represents the identifier of a specific address or address range. Examples: input I 12.1; flag word MW 25; data block DB 3.

Backplane bus

Serial data bus for module intercommunication, and power distribution to the modules. Bus connectors interconnect the modules.

Basic conversion time

Time required for the actual coding of a channel (integration time, plus all times required by the internal control, i.e. the channel is fully processed when this time has expired.

Basic error limit

Represents the operational limit at 25 °C, relative the module's rated range.

Basic execution time

Cycle time of an analog IO module when all of its channels are enabled. Equivalent to "number of channels x basic conversion time."

Bus

A transfer medium that interconnects several nodes. Data may be transferred in serial or parallel mode, using electrical or fiber-optic conductors.

Bus segment

Self-contained part of a bus system. Bus segments are coupled by means of → Repeater.

Calibration

Refers to the process of determining the relationship between the measured or expected value of the output variable and the associated true or correct value of the measured variable provided as the input variable, for a specific measuring device and under particular circumstances.

Common mode voltage (CMV)

The voltage common to all terminals of a group, measured between this group and any reference point (usually ground potential.)

Communications processor

Programmable communications module, used for networking, PtP coupling, for example.

Compensating box

Can be used for temperature measurements using thermocouples connected to analog input modules. Represents a compensation circuit used to compensate temperature fluctuation at the → Reference junction.

Configuring

Refers to the selection and assembly of automation system components, or to software installation and adaptation to a specific process (by programming the modules, for example.)

CP

→ Communications processor

CPU

Central Processing Unit of the → Automation System. A CPU stores and executes the user program. It contains the operating system, memory, processing unit and communications interfaces.

Cycle time

Denotes the time a → CPU requires for a single execution of the → user program.

Default setting

A useful setting which is used whenever the user does not enter a different value.

Destruction limit

Permissible limit of the input voltage / output current. The accuracy of measurements may deteriorate if this limit is violated. If the destruction limit is considerably exceeded, this may destroy the internal measuring circuit.

Diagnostic interrupt

Module diagnostics function report errors to the → CPU by means of diagnostic interrupts. The CPU operating system calls OB 82 when a diagnostic interrupt is generated.

Diagnostics

Generic term for → System diagnostics, hardware error diagnostics, and user-specific diagnostics.

Diagnostics buffer

The diagnostics buffer represents a backup memory in the CPU, used to store diagnostics events in their order of occurrence.

In STEP 7 (PLC → Module status), the user can read data from the diagnostics buffer to determine the precise cause of error.

Diagnostics data

All diagnostics events are logged at the CPU and entered in → Diagnostics buffer. If an error OB exists, the buffer is started.

Direct access

Denotes access of the CPU to a module via the → backplane bus, while bypassing the → Process image.

electrically disconnected

The reference potential of the control and load voltage circuits at electrically isolated IO modules are isolated galvanically, for example, using optocouplers, relay contacts or transformers. IO circuits can be connected to a common reference potential.

electrically interconnected

The reference potential of the control and load voltage circuits of non-isolated IO modules are electrically interconnected.

Equipotential bonding

Electrical connection (equipotential conductor) of electrical equipment and external conductive objects to the same or near to same potential, in order to prevent the development of disturbance and dangerous potentials between those objects.

FREEZE

STEP 7 parameter for the SM 338; POS-INPUT position detection module. FREEZE is a control command (function), used to freeze actual encoder values of SM 338.

Ground

The conductive earth whose electrical potential can be set equal to zero at any point.

Ground potential may be different from zero in the area of grounding electrodes. The term "reference ground" is frequently used to describe this situation.

grounding

Grounding means, to connect an electrically conductive component via an equipotential grounding system to a grounding electrode (one or several conductive components with low impedance contact to earth.)

Hardware interrupt

Function initiated by interrupt-triggering modules, based on specific events in the process (high or low limit violated, module has completed cyclic conversion of channels.)

The hardware interrupt is reported to the CPU, The CPU executes the assigned → Organization block according to interrupt priority.

Hold last value (HLV)

The module retains the last value output before the CPU went into STOP.

Input delay

STEP 7 parameter for digital input modules. The input delay function is used to suppress coupled disturbance. This includes pulse-shaped disturbance within the range from 0 ms to the set input delay

The input delay tolerance is defined in the technical data of the module. The length of suppressed pulse-shaped disturbance is determined by the length of the input delay.

The permissible input delay is determined by the line length between the encoder and the module. Unshielded encoder supply lines of a grater length (more than 100 m) require a long delay setting.

Integration time

STEP 7 parameter for analog input modules. The integration time is equivalent to the inverse value of the → noise suppression frequency in ms.

Interface, multi-point

→ MPI

Interference frequency suppression

STEP 7 parameter for analog input modules. The frequency of AC mains may corrupt measured values, in particular in the low voltage ranges, and when thermocouples are being used. At this parameter, the user defines the mains frequency prevailing on his system.

Interrupt

SIMATIC S7 knows 28 different priority classes which control user program execution. Those priority classes also include hardware interrupts, for example. When an interrupt is generated, the operating system automatically calls an assigned OB which the user can program to trigger a specific action (at an FB for example.)

Interrupt, diagnostics

→ Diagnostic interrupt

Interrupt, end of cycle

→ hardware interrupt

Interrupt, hardware

→ hardware interrupt

Linearity error

Denotes the maximum deviation of the measured/output value from the ideal linear relationship between the measured/output signal and the digital value. Defined as a percentage, relative to the rated range of the analog module.

Logic block

A SIMATIC S7 logic block contains elements of the *STEP 7* user program. In contrast, a data block only contains data. Available logic blocks: Organization Blocks (OBs), Function Blocks (FBs), Functions (FCs), System Function Blocks (SFBs), System Functions (SFCs).

Measuring range module

Modules installed on analog input modules for the adaptation to different measuring ranges.

Monoflop time

STEP 7 parameter for the SM 338; POS-INPUT position detection module. The monoflop time is equivalent to interval between two SSI message frames (→ Absolute encoder.)

MPI

Multi-Point Interface. SIMATIC S7 interface for programming devices. Allows central access to remote programmable modules (CPUs, CPs), Text Displays und Operator Panels. MPI nodes can intercommunicate.

OB

→ Organization Block

Operating mode

Definition of this term:

1. selection of a CPU operating state using the mode selector switch or a PG
2. the type of program execution at the CPU
3. an analog input module parameter in *STEP 7*

Operating state

Operating states known to SIMATIC S7 automation systems: STOP, → STARTUP, RUN and STOP.

Operational limit

Represents the measuring/output error of an analog module across the entire permissible temperature range, based on the module's rating.

Organization block

OBs form the interface between the CPU operating system and the user program. The sequential order of user program execution is defined in the organization blocks.

Parameters

1. Tag of a → Code block
2. Tag used to set one or several properties of a module. Each module is supplied with default parameters which users may edit in *STEP 7*.

PG

→ Programming device

Process image

The CPU saves the signal states of analog IO modules to a process image.

We distinguish between the process image of inputs (PII) and outputs (PIO). The input modules read the process image of inputs (PII) before the operating system executes the user program. The operating system transfers the process image of outputs (PIO) to the output modules at the end of program execution.

Product version

Differentiates products of the same order number. The product version is incremented in the case of upwards compatible enhancements of functionality, production-specific changes (use of new components/parts), and fixes.

Programming device

A programming device (PG) is a special compact PC (Personal Computer) suitable for use in industry. A PG is fully equipped for programming SIMATIC automation systems.

Reference junction

When operating thermocouples on analog input modules: point of known temperature (for example, → compensating box.)

Reference potential

Potential from which the voltages of participating circuits are derived and measured.

Repeat accuracy

Denotes the maximum deviation between measured/output values, if the same input or output signal is repeatedly set. Repeat accuracy refers to the rated range of the module, and applies to its settled temperature state.

Repeater

Equipment used to amplify bus signals, and couple → bus segments across greater distances

Resolution

Number of bits representing the value of analog modules in binary format. The resolution is module-specific. It is also determined by the → integration time of analog input modules. The precision of the measured value resolution increases with the length of the integration time. The maximum resolution is 16 bits + sign.

Response to open thermocouple

STEP 7 parameter for analog input modules operating with thermocouples. This parameter defines whether the module outputs an "Overflow" (7FFFH) or "Underflow" (8000H) value when it detects an open thermocouple.

Restart

At its restart (initiated by setting the mode selector switch from STOP to RUN, or after POWER ON), the CPU first executes restart OB 100, and then continues with cyclic program execution (OB1.)

During its restart, the CPU reads the → Process image of inputs (PIO), and then executes the STEP 7 user program, starting at the first statement in OB1.

Retentivity

Data areas in data blocks (DBs), timers, counters and flags are considered retentive if their content is not lost as a result of restart or power off.

Scaling

STEP 7 parameter for the SM 338; POS-INPUT position detection module. Scaling right-aligns the → Absolute encoder value in the address space; irrelevant places are discarded.

Segment

→ Bus segment

SFC

→ System Function

Signal module

Signal modules (SMs) form the interface between the process and the automation system. These are available as digital and analog input/output and IO modules.

Smoothing

STEP 7 parameter for analog input modules. The measured values are smoothed by digital filtering. Users can select module-specific filter properties, i.e. none, low, medium or high. The time constant of the digital filter increases in proportion to the degree of smoothing.

STARTUP

STARTUP mode initiates the transition from STOP to RUN mode. STARTUP can be triggered by setting the → mode selector, by power on, or by an operator action on the programming device. S7-300 performs a → restart.

Substitution value

Values output by faulty signal output modules to the process, or used to substitute a process value of a faulty signal input module in the user program.

Users can program the substitute values in STEP 7 (hold last value, substitution value 0 or 1.) Those values must be set at the outputs when the CPU goes into STOP.

System diagnostics

Denotes the detection, evaluation and reporting of error events within the automation system. Examples of such errors are: program errors, or module failure. System errors may be indicated by LED displays, or in *STEP 7*.

System Function

A System Function (SFC) is an integral function of the CPU operating system, and can be called in the STEP 7 user program as required.

Temperature coefficient

STEP 7 parameter for analog input modules, for temperature measurements taken with resistance thermometers (RTD.) The selected temperature coefficient is specific to the resistance thermometer being used (to DIN standard.)

Temperature error

Denotes the drift of measured/output values, caused by fluctuation of the ambient temperature at an analog module. It is defined in % per Kelvin, relative to the rated range of the analog module.

Temperature error of internal compensation

Only applies to the measurement of thermocouples. Defines the error to add to the actual temperature error, when "internal comparison" mode is selected. The error is defined either as a percentile value relative to the physical rated range of the analog module, or as an absolute value in °C.

Total current

Total current of all output channels of a digital output module.

ungrounded

no galvanic connection to ground potential

User program

Contains statements, tags and data for processing signals which can control a plant or process. It is assigned to a programmable module (CPU, FM, for example) and can be organized in smaller units (blocks).

Wirebreak

Parameter in *STEP 7*. A wirebreak check is used to monitor line continuity between the encoder and input, or between the actuator and output. The module detects a wirebreak based on a current flow at the appropriately programmed input/output.

Index

2

2-wire connection
    Resistance thermometer, 257
    Voltage output, 269
2-wire transducer, 254

3

3-wire connection, 257

4

40-pin terminal block
    Dimensional drawing, 642
    SM 321, DI 64 x DC 24 V, sinking/sourcing, 66
    SM 321, DO 64 x DC 24 V, 0.3 A sourcing, 128
    SM 322, DO 64 x DC 24 V, 0,3 A Sinking, 136
4-wire connection
    Resistance thermometer, 256
    Voltage output, 268
4-wire transducer, 255

A

Absolute value encoder (SSI)
    SM 338, POS-INPUT, 531
Accessories, 643
Actuators see also Connect loads/actuators, 267
Addressing
    SM 334, 505
    SM 338, POS-INPUT, 532
SM 334
    Unused channels,
SM 331
    Technical specifications,
    Wiring diagram,
SM 331
    Parameters,
    Technical specifications,
SM 331
    Isochronous mode,
    Measurement types and measuring ranges,
    Properties,
    Supplementary information,
    Wiring diagram,
Analog functions, STEP 7 blocks, 315
Analog input module
    Causes of error and troubleshooting, 311
    Common-mode error, 311
    Configuration error, 311
    Dataset 1, structure, 561
    Diagnostics messages, 309
    isolated, non-isolated, 248
    Load voltage missing, 311
    Overflow, 311
    Parameters, 560
    Programming error, 311
    Underflow, 311
    Wirebreak,
    Wiring and connecting thermocouples, 258
Analog input modules
    SM 331, AI 2 x 12 Bit, 386
    SM 331, AI 6 x TC isolated, 433
    SM 331, AI 8 x 12 Bit, 370
    SM 331, AI 8 x 13 Bit, 357
    SM 331, AI 8 x 14 Bit High Speed, 345
    SM 331, AI 8 x 16 Bit, 333
    SM 331, AI 8 x RTD, 400
    SM 331, AI 8 x TC, 416
Analog IO module
    Dataset 1, structure, 606
    Parameters, 605
    SM 334, AI 4/AO 2 x 12 Bit, 507
    SM 334, AI 4/AO 2 x 8/8 Bit, 499
Analog module
    Analog value processing, 247
    Determination of the measuring error/output error, 301
    Diagnostics, 308
    Dimensional drawing, 639
    Group error LED, 309
    Interrupts, 313
    Power failure, 299
    programming, 307
    Reaction, 298
    Start up, step, 316
Analog output channel
    Conversion time, 305
Analog output module
    Causes of error and troubleshooting, 312
    Configuration error, 312

Dataset 1, structure, 600
Diagnostic messages, 310
isolated, non-isolated, 267
Load voltage missing, 312
Parameters, 599
Programming error, 312
Short-circuit to M, 312
Wirebreak,
Analog output modules
SM 332, AO 2 x 12 Bit, 490
SM 332, AO 4 x 12 Bit, 481
SM 332, AO 4 x 16 Bit, 471
SM 332, AO 8 x 12 Bit, 463
Analog value
Conversion, 273
Sign, 273
STEP 7 blocks, 315
Analog value processing
Connecting loads/actuators, 267
Current transducers, 254
Introduction, 247
Resistance thermometer, 256
Resistors, 256
Thermocouples, 258
Transducers, 248
Voltage transducers, 253
Analog-to-digital conversion, 302
Approval, 15
CSA, 17
FM, 18
Marine, 19
UL, 16
Use in industrial environments, 19
Use in residential areas, 19
Auxiliary voltage missing
SM 338, POS-INPUT, 535

B

Basic error limit, 301
Basic knowledge required, 3

C

Causes of error and remedies
SM 321, DI 16 x DC 24 V, 94
SM 321, DI 16 x DC 24 V/125 V, 104
SM 322, DO 8 x AC 120/230 V/2 A ISOL, 206
SM 322, DO 8 x DC 24 V/0.5 A, 190
SM 322, DO 8 x Rel. AC 230 V/5 A (5HF00), 224
Causes of error and troubleshooting
Analog input module, 311
Analog output module, 312
SM 338, POS-INPUT, 535
Changes
in the manual, 3
Changes in the manual, 3
Channel fault
SM 338, POS-INPUT,
Channel information available
SM 338, POS-INPUT, 535
Channel-specific diagnostics, 614
Code type
SM 338, POS-INPUT, 531
Common-mode error
Analog input module, 311
Compensate reference junction temperature, 260
Configuration error
Analog input module, 311
Analog output module, 312
SM 338, POS-INPUT, 535
Connect current transducer, 254
2-wire transducer, 254
4-wire transducer, 255
Connect voltage transducer, 253
Connecting loads/actuators
2-wire connection, 269
4-wire connection, 268
Current output, 270
Introduction, 267
Voltage output, 268
Connecting measuring transducers
Isolated measuring encoders, 249
Non-isolated sensors, 251
Principles, 248
Connecting resistance thermometers, 256
2-wire connection, 257
3-wire connection, 257
4-wire connection, 256
Conversion
of analog values, 273
Conversion time
Analog input channels, 302
Analog output channel, 305
CSA approval, 17
Cycle time
Analog input channels, 302
Analog output channels, 305

D

Data records
for diagnostic data, 609
for parameters, 549
Dataset 1, structure
Analog input module, 561
Analog IO module, 606
Analog output module, 600
Digital input module, 553
Digital output module, 556
SM 322, DO 16 x DC 24 V/0.5 A (8BH10), 558
SM 327, DI 8/DO 8 x DC 24 V/0.5 A, 245
SM 331, AI 6 x TC isolated, 593
SM 331, AI 8 x 13 Bit, 582
SM 331, AI 8 x 16 Bit, 586
SM 331, AI 8 x RTD, 565
SM 331, AI 8 x TC, 575
SM 332, AO 8 x 12 Bit, 603
Dataset 128, structure
SM 331, AI 6 x TC isolated, 594
SM 331, AI 8 x 16 Bit, 587
SM 331, AI 8 x RTD, 566
SM 331, AI 8 x TC, 576
Degree of protection IP 20, 25
Diagnostic interrupt
of analog modules, 313
SM 321, DI 16 x DC 24 V, 96
SM 321, DI 16 x DC 24 V/125 V, 105
SM 322, DO 8 x DC 24 V/0.5 A, 192
SM 322, DO 8 x Rel. AC 230 V/5 A (5HF00), 225
SM 338, POS-INPUT, 536
Diagnostic interrupt enable
SM 338, POS-INPUT,
Diagnostic messages, 534
of analog output modules, 310
reading, 534
SM 321, DI 16 x DC 24 V, 93
SM 321, DI 16 x DC 24 V/125 V, 103
Diagnostics
Digital modules, 60
of analog modules, 308
SM 338, POS-INPUT, 535
Diagnostics data
Channel-specific, 614
Data record, 609
Channel-specific, for SM 338, 623
SM 331, AI 6 x TC isolated, 619
SM 338, POS-INPUT, 622
Diagnostics data entry, 300
Diagnostics interrupt
SM 322, DO 8 x AC 120/230 V/2 A ISOL, 207
Diagnostics messages
of the analog input modules, 309
SM 322, DO 16 x DC 4 V/0.5 A (8BH10), 161
SM 322, DO 8 x AC 120/230 V/2 A ISOL, 206
SM 322, DO 8 x DC 24 V/0.5 A, 189
SM 322, DO 8 x Rel. AC 230 V/5 A (5HF00), 224
Digital I/O module
SM 323, DI 16/DO 16 x DC 24 V/0.5 A, 232
SM 323, DI 8/DO 8 x DC 24 V/0.5 A, 236
SM 327, DI 8/DO 8 x DC 24 V/0.5 A, programmable, 240
Digital input module
Dataset 1, structure, 553
Parameters, 553
SM 321, DI 16 x AC 120/230 V, 117
SM 321, DI 16 x DC 24 V, 79
SM 321, DI 16 x DC 24 V High Speed, 83
SM 321, DI 16 x DC 24 V, source input, 107
SM 321, DI 16 x DC 24 V, with process and diagnostic interrupt, 85
SM 321, DI 16 x DC 24 V/125V, with process and diagnostic interrupt, 98
SM 321, DI 16 x DC 48-125 V, 113
SM 321, DI 16 x UC 24/48 V, 110
SM 321, DI 32 x AC 120 V, 76
SM 321, DI 32 x AC 120/230 V ISOL, 124
SM 321, DI 32 x DC 24 V, 72
SM 321, DI 64 x DC 24 V, sinking/sourcing, 64
SM 321, DI 8 x AC 120/230 V, 120
digital module
Start up, step, 58
Digital module, 49
Diagnostics, 60
Dimensional drawing, 639
Group error LED, 61
programming, 59
Digital output module
Dataset 1, structure, 556
Parameter, 555
SM 322, DO 16 x AC 120/230 V/1 A, 175
SM 322, DO 16 x DC 24 V/0.5 A (1BH01), 151
SM 322, DO 16 x DC 24 V/0.5 A High Speed, 165
SM 322, DO 16 x UC 24/48 V, 169
SM 322, DO 32 x AC 120/230 V/1 A, 147
SM 322, DO 32 x DC 24 V/0.5 A, 143
SM 322, DO 64 x DC 24 V, 0.3 A, sinking, 135
SM 322, DO 64 x DC 24 V/0.3 A sourcing, 127
SM 322, DO 8 x AC 120/230 V/2 A, 197
SM 322, DO 8 x AC 120/230 V/2 A ISOL, 201
SM 322, DO 8 x DC 24 V/0.5 A with diagnostic interrupt, 183
SM 322, DO 8 x DC 24 V/2 A, 179
SM 322, DO 8 x DC 48-125 V/1.5 A, 193

Dimensional drawing, 625
40-pin terminal block, 642
Analog module, 639
Bus module for "hot swapping", 632
Digital module, 639
Interface module, 637
Mounting rail, 626
Shield connection element, 641
Signal module, 639
DM 370
Properties, 521
Technical data, 523
DM 370 dummy module, 521
Documentation structure
Position, 4

E

Electromagnetic compatibility (EMC), 20
Electrostatic discharge, 20
EMV (Electromagnetic compatibility), 20
disturbance variables, 20
Encoder error
SM 338, POS-INPUT, 535
Environmental conditions
Climatic, 24
Mechanical, 23
Operating condition, 23
SIPLUS S7-300, 29
Error
of an analog module, 301

F

FM approval, 18
Freeze function
SM 338, POS-INPUT, 531

G

Group error LED
Analog module, 309
Digital module, 61
SM 338, POS-INPUT, 534

H

Hardware interrupt
End of cycle, 314
SM 321, DI 16 x DC 24 V, 96
SM 321, DI 16 x DC 24 V/125 V, 105
when limit is exceeded, 314

I

IEC 61131, 18
IM 360
Dimensional drawing, 637
Properties, 542
Technical data, 543
IM 361
Dimensional drawing, 637
Properties, 544
Technical data, 545
IM 365
Dimensional drawing, 638
Properties, 546
Technical data, 547
Inbetriebnahme
Analog modules, 316
digital module, 58
Insulation test, 25
Interface module, 541
Dimensional drawing, 637
IM 360, 542
IM 361, 544
IM 365, 546
Internal error
SM 338, POS-INPUT, 535
Internet
Service & support, 651
Interrupts
SM 322, DO 8 x DC 24 V/ 0.5 A, 192
enabling, 536
of analog modules, 313
SM 321, DI 16 x DC 24 V, 96
SM 321, DI 16 x DC 24 V/125 V, 105
SM 322, DO 8 x AC 120/230 V/2 A ISOL, 207
SM 322, DO 8 x Rel. AC 230 V/5 A (5HF00), 225
SM 338, POS-INPUT, 536
Isochronous mode, 90
SM 331, 354
SM 321, DI 16 x DC 24 V, 90
SM 332, AO 4 x 16 Bit, 479
SM 338, 525

L

Load voltage missing
Analog input module, 311
Analog output module, 312

M

Manual
purpose, 3
Marine approval, 19
Measurement types and measuring ranges
SM 331, 396
SM 331, AI 2 x 12 Bit, 396
SM 331, AI 6 x TC isolated, 444
SM 331, AI 8 x 12 Bit, 382
SM 331, AI 8 x 13 Bit, 365
SM 331, AI 8 x 16 Bit, 339
SM 331, AI 8 x RTD, 407
SM 331, AI 8 x TC, 425
SM 334, AI 4/AO 2 x 12 Bit, 515
SM 334, AI 4/AO 2 x 8/8 Bit, 506
Measuring method
Analog input channels, 295
Measuring range module, 295
Changing the position, 295
Measuring ranges
Analog input channels, 295
Module error
SM 338, POS-INPUT, 535
Module overview, 317
Analog I/O modules, 321
Analog input modules, 317
Analog output modules, 320
Digital I/O modules, 57
Digital input modules, 50
Digital output modules, 53
Interface modules, 541
Other signal modules, 517
Relay output modules, 56
Monoflop time
SM 338, POS-INPUT, 531

N

no parameters
SM 338, POS-INPUT, 535

O

OB40, 314
Start information, 314
OB82, 313
Operating state
of the CPU, 299
Operational limit, 301
Order number
6AG1305-1BA80-2AA0, 41
6AG1307-1EA80-2AA0, 44
6AG1321-1BH02-2AA0, 79
6AG1321-1BL00-2AA0, 72
6AG1321-1CH20-2AA0, 113
6AG1321-1FF01-2AA0, 120
6AG1321-7BH01-2AB0, 85
6AG1322-1BH01-2AA0, 151
6AG1322-1CF00-2AA0, 193
6AG1322-1FF01-2AA0, 197
6AG1322-1HF10-2AA0, 226
6AG1322-8BF00-2AB0, 183
6AG1323-1BH01-2AA0, 236
6AG1331-7KB02-2AB0, 386
6AG1332-5HB01-2AB0, 490
6AG1334-0KE00-2AB0, 507
6AG1365-0BA01-2AA0, 546
6ES7 338-4BC01-0AB0, 523
6ES7307-1BA01-0AA0, 32
6ES7307-1EA01-0AA0, 35
6ES7307-1KA02-0AA0, 38
6ES7321-1BH02-0AA0, 79
6ES7321-1BH10-0AA0, 83
6ES7321-1BH50-0AA0, 107
6ES7321-1BL00-0AA0, 72
6ES7321-1BP00-0AA0, 64
6ES7321-1CH00-0AA0, 110
6ES7321-1CH20-0AA0, 113
6ES7321-1EL00-0AA0, 76
6ES7321-1FF01-0AA0, 120
6ES7321-1FF10-0AA0, 124
6ES7321-1FH00-0AA0, 117
6ES7321-7BH01-0AB0, 85
6ES7321-7EH00-0AB0, 98
6ES7322-1BF01-0AA0, 179
6ES7322-1BH10-0AA0, 165
6ES7322-1BL00-0AA0, 143
6ES7322-1BP00-0AA0, 127
6ES7322-1BP50-0AA0, 135
6ES7322-1CF00-0AA0, 193
6ES7322-1FF01-0AA0, 197
6ES7322-1FH00-0AA0, 175
6ES7322-1FL00-0AA0, 147
6ES7322-1HF01-0AA0, 212
6ES7322-1HF10-0AA0, 226
6ES7322-1HH01-0AA0, 208
6ES7322-5FF00-0AB0, 201
6ES7322-5GH00-0AB0, 169
6ES7322-5HF00-0AB0, 217
6ES7322-8BF00-0AB0, 183
6ES7322-8BH10-0AB0, 155
6ES7323-1BH01-0AA0, 236
6ES7323-1BL00-0AA0, 232

6ES7327-1BH00-0AB0, 240
6ES7331-1KF02-0AB0, 357
6ES7331-7HF00-0AB0, 345
6ES7331-7HF01-0AB0, 345
6ES7331-7KB02-0AB0, 386
6ES7331-7KF02-0AB0, 370
6ES7331-7NF00-0AB0, 322
6ES7331-7NF10-0AB0, 333
6ES7331-7PE10-0AB0, 433
6ES7331-7PF01-0AB0, 400
6ES7331-7PF11-0AB0, 416
6ES7332-5HB01-0AB0, 490
6ES7332-5HD01-0AB0, 481
6ES7332-5HF00-0AB0, 463
6ES7332-7ND02-0AB0, 471
6ES7334-0CE01-0AA0, 499
6ES7334-0KE00-0AB0, 507
6ES7360-3AA01-0AA0, 542
6ES7361-3CA01-0AA0, 544
6ES7365-0BA01-0AA0, 546
6ES7370-0AA01-0AA0, 521
6ES7374-2XH01-0AA0, 518
Output range
SM 332, AO 2 x 12 Bit, 496
SM 332, AO 4 x 12 Bit, 487
SM 332, AO 4 x 16 bit, 477
SM 332, AO 8 x 12 Bit, 468
SM 334, AI 4/AO 2 x 12 Bit, 515
SM 334, AI 4/AO 2 x 8/8 Bit, 506
Overflow
Analog input module, 311
Overvoltage protection, 62

P

Parameter
Digital output module, 555
SFCs, 549
Parameters, 59
Analog input module, 560
Analog IO module, 605
Analog output module, 599
changing in the user program, 307
Data record, 549
Digital input module, 553
dynamic, 307
SM 338, POS-INPUT, 531
static, 307
Parameters of modules
SM 331, 398
SM 321, DI 16 x DC 24 V, 91
SM 321, DI 16 x DC 24 V/125 V, 102
SM 321, DO 16 x DC 24 V/0.5 A (8BH10), 160
SM 322, DO 16 x DC 24 V/0.5 A (8BH10), 557
SM 322, DO 16 x UC 24/48 V, 173
SM 322, DO 8 x AC 120/230 V/2 A ISOL, 205
SM 322, DO 8 x DC 24 V/0.5 A with diagnostic interrupt, 188
SM 322, DO 8 x Rel. AC 230 V/5 A (5HF00), 223
SM 327, DI 8/DO 8 x DC 24 V/0.5 A, programmable, 244
SM 331, AI 2 x 12 Bit, 398
SM 331, AI 6 x TC isolated, 592
SM 331, AI 8 x 12 Bit, 384
SM 331, AI 8 x 16 Bit, 585
SM 331, AI 8 x RTD, 564
SM 331, AI 8 x TC, 574
SM 332, AO 4 x 12 Bit, 488
SM 332, AO 4 x 16 Bit, 478
SM 332, AO 8 x 12 Bit, 602
SM 334, AI 4/AO 2 x 12 Bit, 513
Parameters, incorrect
SM 338, POS-INPUT, 535
PARM_MOD, SFC 57, 549
POS input module
SM 338, 523
Position
Documentation structure, 4
Position decoder module
SM 338, POS-INPUT, 523
Power failure
of the analog module, 299
SM 321, DI 16 x DC 24 V, 95
SM 322, DO 8 x DC 24 V/0.5 A with diagnostic interrupt, 191
Power supply module, 31
PS 305 2 A, 41
PS 307 10 A, 38
PS 307 2 A, 32
PS 307 5 A, 35
Programming
Digital modules, 59
in user program, 549
of analog modules, 307
Programming error
Analog input module, 311
Analog output module, 312
SM 338, POS-INPUT, 535
Protection class, 25
PS 305 2 A
Dimensional drawing, 636
Properties, 41
Schematic circuit diagram, 42
Technical specifications, 43

Wiring diagram, 41
PS 307 10 A
Dimensional drawing, 636
Schematic circuit diagram, 39
Technical specifications, 40
Wiring diagram, 38
PS 307 2 A
Dimensional drawing, 633
Properties, 32
Schematic circuit diagram, 33
Technical specifications, 34
PS 307 5 A
Drawing (-1EA80-), 636
Properties, 44
Schematic circuit diagram, 46
Technical specifications, 37
Wiring diagram, 45
PS 307 5A
Drawing (-1EA01-), 634

R

Rail dimensioned drawing, 626
Rated voltage, 25
Relay output module
SM 322, DO 16 x Rel. AC 120/230 V, 208
SM 322, DO 8 x Rel. AC 230 V, 212
SM 322, DO 8 x Rel. AC 230 V/5 A (1HF10), 226
SM 322, DO 8 x Rel. AC 230 V/5 A (5HF00), 217
Representation of analog values,
Binary representation of input ranges, 276
binary representation of output ranges, 292
For current measuring ranges, 279
for resistance thermometers, 291
For voltage measuring ranges, 278
for voltage output ranges, 293
in the current output ranges, 294
of resistive transducers, 279
Resolution, 274

S

Scaling
SM 338, POS-INPUT, 531
Service & support, 651
SF LED, 61
SM 338, POS-INPUT, 534
SFC 57 PARM_MOD, 549
SFC51, 313
SFC55 WR_PARM, 549
SFC56 WR_DPARM, 549
SFC59, 313
Shield connection element, drawing, 641
Shipping conditions, 22
Short-circuit to M
Analog output module, 312
Sign
Analog value, 273
Sign posts
for the manual, 5
Signal module
Dimensional drawing, 639
Overview, 517
Simulator module SM 374, IN/OUT 16, 518
SIPLUS S7-300 module, 26
SM 321, DI 16 x AC 120/230 V
Properties, 117
Technical specifications, 118
Wiring diagram, 117
SM 321, DI 16 x DC 24 V
Causes of error and troubleshooting, 94
Diagnostic interrupt, 96
Diagnostic messages, 93
Hardware interrupt, 96
Interrupts, 96
Isochronous mode, 90
Parameters, 91
Power supply, 95
Properties, 79
redundant sensor supply, 87
Shunt circuit of the sensors, 87
Technical specifications, 81
Wiring diagram, 80
SM 321, DI 16 x DC 24 V High Speed
Properties, 83
Technical specifications, 84
Wiring diagram, 83
SM 321, DI 16 x DC 24 V, source input
Properties, 107
Technical specifications, 108
Wiring diagram, 107
SM 321, DI 16 x DC 24 V, with process and diagnostic interrupt
Properties, 85
Technical specifications, 100
Wiring diagram, 86
SM 321, DI 16 x DC 24 V/125 V
Causes of error and troubleshooting, 104
Diagnostic interrupt, 105
Diagnostic messages, 103
Hardware interrupt, 105
Interrupts, 105
Parameters, 102

Shunt circuit of the sensors, 99
SM 321, DI 16 x DC 24 V/125V, with process and diagnostic interrupt
Properties, 98
Wiring diagram, 99
SM 321, DI 16 x DC 48-125 V
Properties, 113
Technical specifications, 115
Wiring diagram, 114
SM 321, DI 16 x UC 24/48 V
Properties, 110
Technical specifications, 111
Wiring diagram, 110
SM 321, DI 32 x AC 120 V
Properties, 76
Technical specifications, 77
Wiring diagram, 76
SM 321, DI 32 x AC 120/230 V ISOL
Properties, 124
Technical specifications, 125
Wiring diagram, 124
SM 321, DI 32 x DC 24 V
Properties, 72
Technical specifications,
Wiring diagram,
SM 321, DI 64 x DC 24 V, sinking/sourcing
40-pin terminal block, 66
Properties, 64
Technical specifications, 68
Wiring diagram, 65
SM 321, DI 8 x AC 120/230 V
Properties, 120
Technical specifications, 122
Wiring diagram, 121
SM 321, DO 64 x DC 24 V, 0.3 A sourcing
40-pin terminal block, 128
Properties, 127
Technical specifications, 130
Wiring diagram, 127
SM 322, DO 16 x AC 120/230 V/1 A
Properties, 175
Technical specifications, 177
Wiring diagram, 176
SM 322, DO 16 x DC 24 V/0.5 A (1BH01)
Properties, 151
Technical specifications, 153
Wiring diagram, 152
SM 322, DO 16 x DC 24 V/0.5 A (8BH10)
Dataset 1, structure, 558
Diagnostic data records, 616
Diagnostics, 161
Discrepancy error monitoring, 162
Firmware update, 163
I&M data (identification data), 164
Parameter, 557
Properties, 155
Technical specifications, 158
Wiring diagram, 157
SM 322, DO 16 x DC 24 V/0.5 A High Speed
Properties, 165
Technical specifications, 167
Wiring diagram, 166
SM 322, DO 16 x Rel. AC 120/230 V
Properties, 208
Technical specifications, 210
Wiring diagram, 209
SM 322, DO 16 x UC 24/48 V
Parameters, 173
Properties, 169
Technical specifications, 171
Wiring diagram, 170
SM 322, DO 32 x AC 120/230 V/1 A
Properties, 147
Technical specifications, 149
Wiring diagram, 148
SM 322, DO 32 x DC 24 V/0.5 A
Properties, 143
Technical specifications, 145
Wiring diagram, 144
SM 322, DO 64 x DC 24 V, 0.3 A, sinking
40-pin terminal block, 136
Properties, 135
Supplementary information, 139
Technical specifications, 138
Wiring diagram, 135
SM 322, DO 8 x AC 120/230 V/2 A
Properties, 197
Technical specifications, 199
Wiring diagram, 198
SM 322, DO 8 x AC 120/230 V/2 A ISOL
Causes of error and troubleshooting, 206
Diagnostic messages, 206
Diagnostics interrupt, 207
Interrupts, 207
Load restrictions, 207
Parameters, 205
Properties, 201
Technical specifications, 203
Wiring diagram, 202
SM 322, DO 8 x DC 24 V/0.5 A with diagnostic interrupt
Causes of error and troubleshooting, 190
Diagnostic interrupt, 192
Diagnostics messages, 189

Interrupts, 192
Parameters, 188
Power supply, 191
Properties, 183
Technical specifications, 186
Wiring diagram, 184
SM 322, DO 8 x DC 24 V/2 A
Properties, 179
Technical specifications, 181
Wiring diagram, 180
SM 322, DO 8 x DC 48-125 V/1.5 A
Properties, 193
Technical specifications, 195
Wiring diagram, 194
SM 322, DO 8 x Rel. AC 230 V
Properties, 212
Technical specifications, 214
Wiring diagram, 213
SM 322, DO 8 x Rel. AC 230 V/5 A (1HF10)
Properties, 226
Technical specifications, 229
Wiring diagram, 227
SM 322, DO 8 x Rel. AC 230 V/5 A (5HF00)
Causes of error and troubleshooting, 224
Diagnostic interrupt, 225
Diagnostics messages, 224
Interrupts, 225
Parameters, 223
Properties, 217
Technical specifications, 220
Wiring diagram, 218
SM 323, DI 16/DO 16 x DC 24 V/0.5 A
Properties, 232
Technical specifications, 234
Wiring diagram, 233
SM 323, DI 8/DO 8 x DC 24 V/0.5 A
Properties, 236
Technical specifications, 238
Wiring diagram, 237
SM 327, DI 8/DO 8 x DC 24 V/0.5 A, programmable
Dataset 1, structure, 245
Parameters, 244
Properties, 240
Technical specifications, 242
Wiring diagram, 241
SM 331, AI 2 x 12 Bit
Measurement types and measuring ranges, 396
Parameters, 398
Properties, 386
Supplementary information, 399
Technical specifications, 392
Wiring diagram, 387
SM 331, AI 6 x TC isolated
Calibration, 456
Dataset 1, structure, 593
Dataset 128, structure, 594
Diagnostics data, 619
Firmware update, 453
I&M data (identification data), 455
Measurement types and measuring ranges, 444
Parameter, 592
Properties, 433
Supplementary information, 446
Technical specifications, 438
Terminal assignment, 434
SM 331, AI 8 x 12 bit
Parameters, 384
SM 331, AI 8 x 12 Bit
Measurement types and measuring ranges, 382
Properties, 370
Supplementary information, 385
SM 331, AI 8 x 13 Bit
Dataset 1, structure,
Measurement types and measuring ranges, 365
Properties, 357
Supplementary information, 367
Wiring diagram, 357
SM 331, AI 8 x 14 Bit High Speed
Technical specifications, 348
SM 331, AI 8 x 16 Bit
Dataset 1, structure, 586
Dataset 128, structure, 587
High-speed update of measured values, 323
Measurement types and measuring ranges, 339
Measurement types and ranges, 328
Parameter, 353
Parameters, 585
Properties, 333
Supplementary information, 341
Technical specifications, 336
Wiring diagram, 334
SM 331, AI 8 x RTD
Dataset 1, structure, 565
Dataset 128, structure, 566
Measurement types and measuring ranges, 407
Parameters, 564
Properties, 400
Supplementary information, 412
Technical specifications, 403
Wiring diagram, 401
SM 331, AI 8 x TC
Dataset 1, structure, 575
Dataset 128, structure, 576
Measurement types and measuring ranges, 425

Parameter, 426
Parameters, 574
Properties, 416
Supplementary information, 428
Technical specifications, 420
Wiring diagram, 417
SM 332, AO 2 x 12 Bit
Output range, 496
Properties, 490
Supplementary information, 498
Technical specifications, 493
Wiring diagram, 491
SM 332, AO 4 x 12 Bit
Output range, 487
Parameters, 488
Properties, 481
Supplementary information, 489
Technical specifications, 484
Wiring diagram, 481
SM 332, AO 4 x 16 bit
Output range, 477
SM 332, AO 4 x 16 Bit
Isochronous mode, 479
Parameters, 478
Technical specifications, 474
SM 332, AO 4 x 16 Bit, isochrone
Properties, 471
Supplementary information, 480
Wiring diagram, 472
SM 332, AO 8 x 12
Properties, 463
Supplementary information, 470
Wiring diagram, 463
SM 332, AO 8 x 12 Bit
Dataset 1, structure, 603
Output range, 468
Parameter, 469
Parameters, 602
Technical specifications, 466
SM 334, AI 4/AO 2 x 12 Bit
Measurement types and measuring ranges, 515
Output range, 515
Parameters, 513
Properties, 507
Technical specifications, 510
Wiring diagram, 508
SM 334, AI 4/AO 2 x 8/8 Bit
Addresses, 505
Measurement types and measuring ranges, 506
Output types and output ranges, 506
Technical specifications, 502
Unused channels, 506
Wiring diagram, 499
SM 338
Cyclic encoder value acquisition, 527
Isochronous encoder value acquisition, 527
Isochronous mode, 525
POS input module, 523
SM 338, POS-INPUT
Absolute value encoder (SSI), 531
Addressing, 532
Auxiliary voltage missing, 535
Causes of error and troubleshooting, 535
Channel error, 535
Channel fault, 535
Channel information available, 535
Code type, 531
Configuration error, 535
Diagnostic interrupt, 536
Diagnostic interrupt enable,
Diagnostics, 534
Diagnostics data, 623
Encoder error, 535
External error, 535
Freeze function, 531
Group error LED, 534
Incorrect parameters, 535
Internal error, 535
Interrupts, 536
Module error, 535
Monoflop time, 531
no parameters, 535
Programming error, 535
Scaling, 531
SF LED, 534
Technical data, 537
Transmission rate, 531
Watchdog time-out, 535
Wiring diagram, 526
SM 374, IN/OUT 16
Properties, 518
Technical data, 520
Smoothing of analog input values, 303
Spare parts, 643
Standards, 15
STEP 7 blocks for analog functions, 315
Storage conditions, 22

T

Technical data
    Shipping and storage conditions, 22
Technical specifications
    EMV (Electromagnetic compatibility), 20
    Standards and approvals, 15
Test voltage, 25
Thermocouple
    external compensation, 263
    General, 258
    Internal compensation, 262
    Operating principle, 260
    Reference junction, 265
    Structure, 259
Training center, 652
Transmission rate
    SM 338, POS-INPUT, 531

U

UL certification, 16
Underflow
    Analog input module, 311

W

Watchdog time-out
    SM 338, POS-INPUT, 535
Wirebreak
    Analog input module,
    Analog output module,
WR_DPARM, SFC 56, 549
WR_PARM, SFC 55, 549

© Siemens AG 2011

Overview

ITEM 502

- The mechanical mounting rack of the SIMATIC S7-300
- For accommodating the modules
- Can be screwed onto the wall

Ordering data	Order No.
DIN rail	
160 mm	**6ES7 390-1AB60-0AA0**
482 mm	**6ES7 390-1AE80-0AA0**
530 mm	**6ES7 390-1AF30-0AA0**
830 mm	**6ES7 390-1AJ30-0AA0**
2000 mm	**6ES7 390-1BC00-0AA0**

1.1 Available standard front connectors for SIMATIC S7-300

Depending on the module, 20-pin or 40-pin front connectors are used. These front connectors are available with …

screw contacts	spring contacts	FastConnect

The 20pin connectors is shown.

Table 1

	Connection system	Order number (1 unit per unit pack)	Order number (100 units per unit pack)
20-pin front connector for up to 16 I/O channels.	Screw contacts	6ES7 392-1AJ00-0AA0	6ES7 392-1AJ00-1AB0
	Spring contacts	6ES7 392-1BJ00-0AA0	6ES7 392-1BJ00-1AB0
	FastConnect	6ES7 392-1CJ00-0AA0	-
40-pin front connector for up to 32 I/O channels.	Screw contacts	6ES7 392-1AM00-0AA0	6ES7 392-1AM00-1AB0
	Spring contacts	6ES7 392-1BM01-0AA0	6ES7 392-1BM01-1AB0
	FastConnect	6ES7 392-1CM00-0AA0	-

Copyright © Siemens AG 2008 All rights reserved
23060726_S7-300_Kabel_und_Zubehoer_Zuordnung_Stecker_Baugruppe_e.doc

ITEM 507

SIEMENS

SIMATIC NET

S7-300 - Industrial Ethernet / PROFINET CP 343-1 Lean

Manual

Preface

Properties / services 1

Performance data 2

Requirements for use 3

LEDs 4

Installation, connecting up and commissioning 5

Notes on configuration and operation 6

Service and maintenance 7

Technical specifications 8

Approvals A

References B

Manual Part B

10/2012

C79000-G8976-C198-07

Legal information

Warning notice system

This manual contains notices you have to observe in order to ensure your personal safety, as well as to prevent damage to property. The notices referring to your personal safety are highlighted in the manual by a safety alert symbol, notices referring only to property damage have no safety alert symbol. These notices shown below are graded according to the degree of danger.

⚠ DANGER
indicates that death or severe personal injury **will** result if proper precautions are not taken.

⚠ WARNING
indicates that death or severe personal injury **may** result if proper precautions are not taken.

⚠ CAUTION
indicates that minor personal injury can result if proper precautions are not taken.

NOTICE
indicates that property damage can result if proper precautions are not taken.

If more than one degree of danger is present, the warning notice representing the highest degree of danger will be used. A notice warning of injury to persons with a safety alert symbol may also include a warning relating to property damage.

Qualified Personnel

The product/system described in this documentation may be operated only by **personnel qualified** for the specific task in accordance with the relevant documentation, in particular its warning notices and safety instructions. Qualified personnel are those who, based on their training and experience, are capable of identifying risks and avoiding potential hazards when working with these products/systems.

Proper use of Siemens products

Note the following:

⚠ WARNING
Siemens products may only be used for the applications described in the catalog and in the relevant technical documentation. If products and components from other manufacturers are used, these must be recommended or approved by Siemens. Proper transport, storage, installation, assembly, commissioning, operation and maintenance are required to ensure that the products operate safely and without any problems. The permissible ambient conditions must be complied with. The information in the relevant documentation must be observed.

Trademarks

All names identified by ® are registered trademarks of Siemens AG. The remaining trademarks in this publication may be trademarks whose use by third parties for their own purposes could violate the rights of the owner.

Disclaimer of Liability

We have reviewed the contents of this publication to ensure consistency with the hardware and software described. Since variance cannot be precluded entirely, we cannot guarantee full consistency. However, the information in this publication is reviewed regularly and any necessary corrections are included in subsequent editions.

Siemens AG
Industry Sector
Postfach 48 48
90026 NÜRNBERG
GERMANY

Order number: C79000−G8976−C198
Ⓟ 10/2012 Technical data subject to change

Copyright © Siemens AG 2009 - 2012.
All rights reserved

Preface

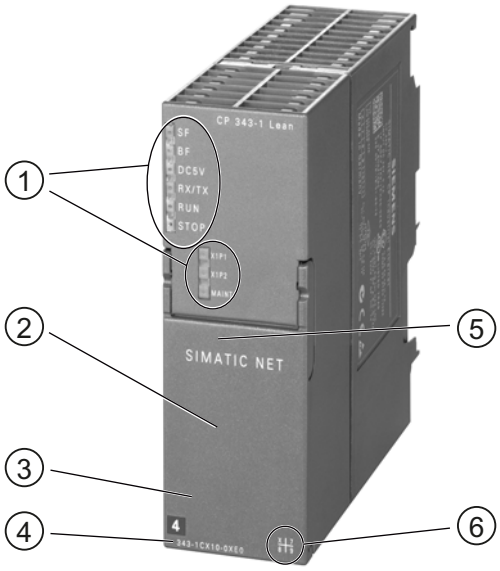

Legend:

① LEDs

② Under the front panel:
PROFINET interface, 2 x 8-pin RJ-45 jack

③ Under the front cover:
- Socket for 24 VDC power supply
- Slider for setting the ground connector

④ Order number

⑤ Under the front panel:
printed text with MAC addresses and firmware version

⑥ X = placeholder for hardware product version

Figure 1 CP 343-1 Lean

Validity and product names

This description contains information on the following product:

CP 343−1 Lean
Order number 6GK7 343−1CX10−0XE0
Hardware product version 7
Firmware version V3.0

Communications processor for SIMATIC S7−300 / C7−300

Note

Names

- In this document, the term "CP" is used instead of the full product name.
- The name STEP 7 is used for the configuration tool instead of the names STEP 7 V5.5 and STEP 7 Professional.

Innovations and compatibility with the predecessor product

Note

You will find the new functions of the module in the section Enhanced functions (Page 9).

Make sure that you read the information relating to enhanced functions and restrictions that may apply in the section module replacement / upgrading (Page 50).

Address label: Unique MAC address for the CP

The CP is supplied with total of 3 default MAC addresses with the following assignment:

- PROFINET interface
- One MAC address for each of the 2 Ethernet ports of the PROFINET interface

  The MAC addresses of the Ethernet ports are required only for detection and evaluation of neighborhood and topology relations.

The MAC address of the PROFINET interface is printed on the housing.

Structure of the documentation

The documentation for this device consists of the following parts:

- Manual Part A: Configuration manual "Configuring and Commissioning S7CPs for Industrial Ethernet", see references /1/ (Page 60).
- Manual Part B: Manual "CP 343-1 Lean" (this manual)
- Program blocks for SIMATIC NET S7 CPs - programming manual, see references /10/ (Page 62)

  Contains the detailed description of the program blocks for the following services:

  – Open communications services
  – Access coordination with FETCH/WRITE
  – Connection and system diagnostics
  – Programmed connections and IP configuration
  – PROFINET IO

Current manual release on the Internet

You will also find the current version of this manual on the Internet pages of Siemens Automation Customer Support under the following entry ID:

23643456 (http://support.automation.siemens.com/WW/view/en/23643456)

CP documentation in the Manual Collection (order no. A5E00069051)

The "SIMATIC NET Manual Collection" DVD contains the device manuals and descriptions of all SIMATIC NET products current at the time it was created. It is updated at regular intervals.

Version History / Current Downloads for the SIMATIC NET S7 CPs

The "Version History/Current Downloads for SIMATIC NET S7 CPs" provides information on all CPs available up to now for SIMATIC S7 (Industrial Ethernet, PROFIBUS and IE/PB Link).

An up-to-date version of this document can be found at on the Internet under the entry ID:

9836605 (http://support.automation.siemens.com/WW/view/en/9836605)

SIMATIC NET glossary

Explanations of the specialist terms used in this documentation can be found in the SIMATIC NET glossary.

You will find the SIMATIC NET glossary here:

- SIMATIC NET Manual Collection

  The DVD ships with certain SIMATIC NET products.

- On the Internet under the following entry ID:

  50305045 (http://support.automation.siemens.com/WW/view/en/50305045)

FAQs on the Internet

You will find detailed information (FAQs) on using the CP described here on the Internet at the following address (entry type "FAQ"):

Link: (http://support.automation.siemens.com/WW/view/en/10806067)

Security messages

Note

For its automation and drives product portfolio, Siemens provides IT security mechanisms to support secure operation of the plant/machine. Our products are continuously being further developed also taking into account the aspect of IT security. We therefore recommend that you regularly check for updates of our products and that you only use the latest versions. You will find information in:

(http://support.automation.siemens.com/WW/llisapi.dll?func=cslib.csinfo2&aktprim=99&lang=en)

Here, you can register for a product-specific newsletter.

For the secure operation of a plant/machine, it is also necessary to integrate the automation components in a full IT security concept for the entire plant/machine that represents the state of the art in IT technology. You will find information on this in:
(http://www.siemens.com/industrialsecurity)

Products from other manufacturers that are being used must also be taken into account.

Table of contents

Preface 3

1 Properties / services 9

1.1 Application 9

1.2 Enhanced functions 9

1.3 Communication services 10

1.4 Other services 11

1.5 The CP as Web server 13

2 Performance data 15

2.1 Transmission and reaction times 15

2.2 Number of possible Ethernet/PROFINET connections 15

2.3 Characteristics of S7 communication 16

2.4 Characteristic data of the SEND/RECEIVE Interface 16

2.5 PROFINET IO characteristic data 18

2.6 Characteristic data of the integrated switch 19

3 Requirements for use 21

3.1 Operation in control device families 21

3.2 Project engineering 23

3.3 Programming 24

4 LEDs 25

5 Installation, connecting up and commissioning 29

5.1 Important notes on using the device 29

5.2 Installing the CP, connecting power and ground 31

5.3 Connecting the CP to Ethernet 34

6 Notes on configuration and operation 37

6.1 Project engineering 37

6.2 Controlling the mode 37

6.3 Network settings 38

6.4 Influence of MPI on connections via Industrial Ethernet 40

6.5 PROFINET IO when operating other services at the same time 40

6.6 Effects of multicast communication on RT communication 41

6.7 IP configuration 41

6.7.1 Detection of double IP addressing in the network ... 41
6.7.2 Obtain IP address vie DHCP: CP STOP on expiry of the lease ... 42
6.8 Media redundancy ... 42
6.9 Timeofday synchronization ... 42
6.10 SNMP agent ... 42
6.11 Possible security gaps on standard IT interfaces: preventing unauthorized access ... 45
6.12 Programmed communication connections ... 45
6.12.1 Programmed communication connections with FB55 IP_CONFIG ... 45
6.12.2 Programmed communications connections - assigning parameters to the ports ... 46
6.13 Permitted length of ICMP packets ... 46
7 Service and maintenance ... 47
7.1 Memory reset / reset to factory defaults ... 47
7.2 Loading new firmware ... 48
7.3 Replacing a module ... 49
7.3.1 Replacing older modules ... 49
7.3.2 module replacement / upgrading ... 50
7.3.3 Replacing a module without a programming device ... 51
8 Technical specifications ... 53
A Approvals ... 55
B References ... 59
Index ... 67

Properties / services 1

1.1 Application

The CP 343- Lean communications processor is intended for operation in a SIMATIC S7-300 or SIMATIC C7 automation system. It allows the connection of the S7-300 to Industrial Ethernet and supports PROFINET IO.

To integrate the CP in a linear bus or a ring, to connect a further Ethernet device or to use PROFINET media redundancy, a 2-port ERTEC real-time switch with autocrossing, autonegotiation and autosensing was integrated.

1.2 Enhanced functions

Abbreviations used with the CP 343-1 Lean module

The module abbreviations used below for the CP 343-1 Lean (for example CX10) correspond to the last four characters of the mid section of the order number.

Requirement for configuring new functions of firmware version V3.0

To use the features listed below, the following STEP 7 version is necessary:

- STEP 7 V5.5 + Service Pack 2 + Hotfix 1 + HSP 1056

With STEP 7 Professional V11.0 SP2, only the functions of firmware version V2.2 of the CP can be configured.

Functional enhancements of the CX10 from firmware version V2.6 to V3.0 - can be used with STEP 7 V5.5

The following new functions can be used with the module with firmware version 3.0:

- "Shared device" function with PROFINET IO
- Use of PROFIenergy functionality

  This requires the following PROFIenergy program blocks for the CP 343-1 in the "SIMATIC_NET_CP" library with the STEP 7 version listed above:

  – PE_Start_CP, PE_CMD_CP, PE_I_DEV_CP and the program block DS3_WRITE_CP for the use of power modules of the ET 200S for PROFIenergy.

  – The supplementary program blocks FC0 to FC8 for the PROFIenergy response data can be found in the Standard Library.

  You will find the documentation of the program blocks in the online help and in the manual for the program blocks, see References, /10/ (Page 62).

- New program block FB10 AG_CNTEX for connection diagnostics
- Configuration of the IO devices in the STEP 7 "I-device" dialog box (and as previously using a GSDML file)

Functional enhancements of the CX10 with firmware version V3.0 - regardless of the configuration tool used

- Advanced Web diagnostics (HTTP access) with the following additional options:
  - Diagnostics of S7 connections
  - Module identification
  - Expansion of Web diagnostics for The "Shared device" function
- Update center of Web diagnostics with the following functions:
  - Downloading firmware via the Web (HTTP access)
  - Downloading of language files for diagnostics buffer texts in STEP 7 format for new modules in the rack and for changing the language
- SNMP: Support of the MRP Monitoring MIB

Enhanced functions of earlier firmware versions and predecessor modules

You will find an overview of the earlier firmware versions and predecessor modules in the version history of the Industrial Ethernet CPs on the Internet pages of Siemens Automation Customer Support under the following entry ID:
56699406 (http://support.automation.siemens.com/WW/view/en/56699406)

You will find information about the characteristics of the individual firmware versions on the Internet pages of Siemens Automation Customer Support under the following entry ID:
43409748 (http://support.automation.siemens.com/WW/view/en/43409748)
> Entry list > Entry type "Updates"

1.3 Communication services

The CP supports the following communication services:

- PROFINET IO

  PROFINET IO allows direct access to IO devices over Industrial Ethernet.

  - PROFINET IO device

    Integration of the SIMATIC S7-300 automation system via the CP as an intelligent PROFINET IO device (I-device).

  - Shared device

    Individual submodules of the CP (IO device) can be assigned up to two PROFINET IO controllers in STEP 7 V5.5.

    Note the information on configuring PROFINET IO systems with shared IO devices in the "PROFINET System Description", see references, /13/ (Page 63).

- **S7 communication and PG/OP communication with the following functions:**
  - PG functions (including routing)
  - Operator control and monitoring functions (HMI)
  - Server for data exchange on S7 connections configured at one end only without communication blocks on the S7300 / C7300 station
- **Open communication services with the following functions:**
  - SEND/RECEIVE interface ISOonTCP, TCP and UDP connections

    UDP frame buffering on the CP can be disabled during configuration. When necessary, this allows you to achieve a shorter reaction time between the arrival of a UDP frame and its evaluation on the CPU.
  - Multicast over UDP connection

    The multicast mode is made possible by selecting a suitable IP address when configuring connections.
  - FETCH/WRITE services (server; corresponding to S5 protocol) via ISO-on-TCP connections and TCP connections

    The addressing mode can be configured for FETCH/WRITE access as S7 or S5 addressing mode.
  - LOCK/UNLOCK with FETCH/WRITE services
  - Connection diagnostics from the user program

1.4 Other services

The CP also provides the following additional services:

- **Media redundancy (MRP)**

  Within an Ethernet network with a ring topology, the CP supports the media redundancy protocol MRP. You can assign the role of MRP client to the CP.
- **Time-of-day synchronization over Industrial Ethernet**

  Time-of-day synchronization can be configured in the following modes:
  - SIMATIC mode

    The CP receives MMS time messages and synchronizes its local time and the time of the CPU.

    Accuracy approx. +/- 1 second

    You can choose whether or not the time of day is forwarded. The forwarding direction can also be selected (station > LAN or LAN > station).

or

– NTP mode (NTP: Network Time Protocol)

  The CP sends timeofday queries at regular intervals to an NTP server and synchronizes its local time of day. The forwarding of the time-of-day to the CPU is optional.

  Accuracy approx. +/- 1 second

- **Addressing using a factoryset MAC address**

  The CP can be reached via the default MAC address to allow an IP address to be assigned.

- **SNMP agent**

  The CP supports data queries over SNMP in version V1 (Simple Network Management Protocol). It delivers the content of certain MIB objects according to the MIB II standard, LLDP MIB, Automation System MIB and MRP Monitoring MIB.

- **Module access protection**

  To protect the module from accidental or unauthorized access, protection can be configured at various levels.

- **IP configuration**

  For the PROFINET interface, you can configure how and with which method the CP is assigned the IP address, the subnet mask and the address of a gateway.

  As an alternative to STEP 7, you have the option of assigning the connection configuration via a block interface in the user program (FB55: IP_CONFIG).

- **Web diagnostics**

  With the aid of Web diagnostics, you can read out the diagnostics data from a station connected via the CP to a PG/PC with a Web browser.

  This makes it possible to read the diagnostics buffers of the intelligent modules in the rack.

  Using the integrated update center of the diagnostics pages, you can download new firmware versions and diagnostics buffer message texts.

  If you do not require the functions, you can disable it in the STEP 7 configuration and disable port 80.

- **Connection diagnostics with the AG_CNTEX program block**

  With the AG_CNTEX program block, you can diagnose connections.

  – When necessary, you can activate or deactivate connections or initiate reestablishment of a connection.

  – You can check the reachability of the connection partners using the ping function.

  – You can find out which connection types are set up for the SEND / RECEIVE interface.

1.5 The CP as Web server

Enabling the Web server function

To use the Web server functionality of the CP, enable the relevant option in STEP 7 in the module properties, "Web" parameter group. This enables port 80 of the CP.

If you no longer require the functions, deactivate the function. The Web server function is enabled as default.

Web diagnostics

The CP provides you with the functionality of a web server for access by means of a web browser. The CP provides HTML pages for Web diagnostics. With the aid of Web diagnostics, you can read out the diagnostics data from a station connected via the CP to a PG/PC with an Internet browser.

With the following address, you have access to Web diagnostics:
`http:\\<IP address of the CP>`

Using the integrated update center of the diagnostics pages, you can download new firmware versions and language files for the diagnostics buffer message texts.

For detailed information on Web diagnostics, refer to the general Part A of this manual, /1/ (Page 60).

Diagnostics buffer entries

When supplied, diagnostics buffer entries shown on diagnostics pages are always in English. This is the case whichever language you have selected to display the Web pages.
How to download other language files to the CP and further information about Web diagnostics can be found in the general Part A of this manual.

Web browser

To access the HTML pages on the CP, you require a Web browser. The following Web browsers are suitable for communication with the CP (other browsers also possible):

- Internet Explorer (recommended version: as of 7.0)
- Chrome (recommended version: as of 12.0)
- Opera (recommended version: as of 9.2)
- Firefox (recommended version: as of 4.0)

You will find these Web browsers, information and any necessary addons on the Internet.

Performance data 2

2.1 Transmission and reaction times

Measured values on the Internet

Note

Measured values of transmission and reaction times over Ethernet, PROFIBUS and PROFINET networks for a series of configurations can be found on the Internet at the following address:

http://www.siemens.com/automation/pd (http://www.siemens.com/automation/pd)

2.2 Number of possible Ethernet/PROFINET connections

Maximum number of parallel connections

Table 2- 1 Maximum number of parallel connections

Characteristic	Explanation / values
Permitted number of simultaneous connections in total over Industrial Ethernet	12 maximum

Example of maximum load

You can, for example, operate:

- 4 S7 connections
- 4 ISO-on-TCP connections
- 2 TCP connections
- 2 UDP connections

Also:

- Further TCP connections for Web diagnostics
- PROFINET IO
  - As PROFINET IO device:

    1 PROFINET connection to a PROFINET IO controller

    or
  - As shared device:

    2 PROFINET connections to 2 PROFINET IO controllers

2.3 Characteristics of S7 communication

Number of connections

Table 2- 2 Number of connections for S7 communication

Characteristic	Explanation / values
Number of connections for S7 communication via Industrial Ethernet for: • Operator control and monitoring functions (HMI) • S7 connections configured at one end	Maximum 4 (one-ended connections) The number depends on the CPU type being used; the valid values can be found in /1/ (Page 60).
LAN Interface - data record length per protocol unit • sending • receiving	 • 240 bytes / PDU • 240 bytes / PDU

2.4 Characteristic data of the SEND/RECEIVE Interface

The SEND/RECEIVE interface provides access to communication over TCP, ISOonTCP and UDP connections.

The following characteristics are important:

Table 2- 3 Characteristic data of the SEND/RECEIVE Interface

Characteristic	Explanation / values
Number of ISO-on-TCP connections + TCP connections + UDP connections in total	8 maximum Notes: • All UDP connections are also possible in multicast mode. • Free UDP connections are supported by the CP.
Maximum data length for the blocks AG_SEND (as of V4.0) and AG_RECV (as of V4.0)	AG_SEND and AG_RECV allow the transfer of blocks of data with the following length: • 1 to 8192 bytes for ISO-on-TCP, TCP; • 1 to 2048 bytes for UDP.
Restrictions for UDP	
• Transfer is not confirmed	The transmission of UDP frames is unconfirmed, in other words the loss of messages is not detected or displayed by the send block (AG_SEND).
• No receipt of UDP broadcast	To avoid communications overload of the CP due to high broadcast load, the CP does not allow receipt of UDP broadcasts.
• UDP frame buffering	Size of the frame buffer with buffering enabled: 2 Kbytes Note: Following a buffer overflow, newly arriving frames are discarded.

Execution times of the FCs AG_SEND / AG_RECV

The execution time required to process the FC blocks (AG_SEND, AG_RECV) required on the S7-300 / C7-300 CPU is decisive for the calculation of the CPU cycle times (OB1) for SEND/RECEIVE connections.

Note

Measurements of transmission and reaction times in Ethernet, PROFIBUS and PROFINET networks for a series of configurations can be found on the Internet at the following address:

25209605 (http://support.automation.siemens.com/WW/view/en/25209605)

2.5 PROFINET IO characteristic data

Configuration limits of the CP as an IO device and I-device

The CP supports the following maximum configuration if it is configured as a PROFINET IO device and as an I-device:

Table 2- 4 Configuration limits of the CP as a PROFINET IO device

Characteristic	Value
Maximum number of PROFINET IO connections	• As PROFINET IO device: 1 PROFINET connection to a PROFINET IO controller or • As shared device: 2 PROFINET connections to 2 PROFINET IO controllers
Size of the input area of the PROFINET IO device	512 bytes max. *
Size of the output area of the PROFINET IO device	512 bytes max. *
Size of the IO data area per sub module on the PROFINET IO device	• Inputs: 240 bytes • Outputs: 240 bytes
Size of the consistency area for a submodule	240 bytes
Maximum number of submodules	32
Size of the transfer area	240 bytes
Number of transfer areas	32

* For the size of the user data, refer to the following section.

Size of the user data

The size of the user data is calculated from the maximum frame size (gross 548 bytes) minus the following values: 1 for the CP itself, 1 per Interface, 1 per port, 1 for each plugged-in module in HW Config or per slot used.

Table 2- 5 Example of calculating the user data of the CP 343-1 as an IO device

Bytes	Explanation
548	Gross size of the frame
-1	for the CP itself
-1	for the Interface
-2	for 2 ports
-32	for the maximum number of pluggable modules
= 512	Net size of the user data *

* By using fewer but larger modules, the amount of user data can be increased.

Execution times of the FC blocks PNIO_SEND / PNIO_RECV

The execution time required to process the function blocks (PNIO_SEND, PNIO_RECV) required on the S7-300 CPU is decisive for the calculation of the reaction times in PROFINET IO.

Note

Measurements of transmission and reaction times in Ethernet, PROFIBUS and PROFINET networks for a series of configurations can be found on the Internet at the following address:

25209605 (http://support.automation.siemens.com/WW/view/en/25209605)

2.6 Characteristic data of the integrated switch

Learning addresses / deleting addresses (aging time)

The switch integrated in the CP (PROFINET interface) reads the source addresses included in the data packets. The switch therefore learns the addresses of the end devices connected via a port.

If the switch receives a data packet, it directs this packet only to the port via which the appropriate end node can be reached.

The switch monitors the age of the learned addresses. Addresses that exceed the "aging time" are deleted. The aging time is 5 minutes.

Ports can be deactivated individually

The ports of the switch integrated in the CP can be deactivated individually in STEP 7 / HW Config. This can, for example, be used for service purposes.

To do this, open the properties dialog of the relevant port and select the "disabled" setting under "Options > Transfer medium / duplex".

The port is turned off completely when it is disabled. The corresponding LED on the device (for example X1P1) is then turned off.

Requirements for use 3

3.1 Operation in control device families

The CP can be operated in the following device families:

- S7-300 stations with the following CPU types:
  - Standard
  - Compact
  - Modular
- C7 compact units in C7 packaging system

The following tables show the device environment in which the CP can be operated with the range of functions described here.

Note

The tables list the CPUs and devices released at the time this manual went to print. CPUs of the S7-300 or C7 control systems released later and not listed in the tables can also handle the range of functions described here.

Table 3- 1 Use of the CP with S7-300

CPU	Order number
CPU 312	6ES7 312-1AD10-0AB0 6ES7 312-1AE13-0AB0 6ES7 312-1AE14-0AB0
CPU 312C	6ES7 312-5BD00-0AB0 6ES7 312-5BD01-0AB0 6ES7 312-5BE03-0AB0
CPU 312 IFM	6ES7 312-5AC02-0AB0 6ES7 312-5AC82-0AB0
CPU 313	6ES7 313-1AD03-0AB0
CPU 313C	6ES7 313-5BE00-0AB0 6ES7 313-5BE01-0AB0 6ES7 313-5BF03-0AB0
CPU 313C-2 DP	6ES7 313-6CE00-0AB0 6ES7 313-6CE01-0AB0 6ES7 313-6CF03-0AB0
CPU 313C-2 PtP	6ES7 313-6BE00-0AB0 6ES7 313-6BE01-0AB0 6ES7 313-6BF03-0AB0
CPU 314	6ES7 314-1AE00-0AB0 6ES7 314-1AE04-0AB0 6ES7 314-1AE84-0AB0 6ES7 314-1AF10-0AB0 6ES7 314-1AF11-0AB0 6ES7 314-1AG13-0AB0

CPU	Order number
CPU 314 IFM	6ES7 314-5AE03-0AB0 6ES7 314-5AE10-0AB0 6ES7 314-5AE82-0AB0 6ES7 314-5AE83-0AB0
CPU 314C-2 DP	6ES7 314-6CF00-0AB0 6ES7 314-6CF01-0AB0 6ES7 314-6CF02-0AB0 6ES7 314-6CG03-0AB0
CPU 314C-2 PtP	6ES7 314-6BF00-0AB0 6ES7 314-6BF01-0AB0 6ES7 314-6BF02-0AB0 6ES7 314-6BG03-0AB0
CPU 315	6ES7 315-1AF03-0AB0
CPU 315-2 DP	6ES7 315-2AF03-0AB0 6ES7 315-2AF83-0AB0 6ES7 315-2AG10-0AB0 6ES7 315-2AH14-0AB0
CPU 315-2 PN/DP	6ES7 315-2EG10-0AB0 6ES7 315-2EH13-0AB0 6ES7 315-2EH14-0AB0
CPU 315F-2 DP	6ES7 315-6FF00-0AB0 6ES7 315-6FF01-0AB0 6ES7 315-6FF04-0AB0
CPU 315F-2 PN/DP	6ES7 315-2FH10-0AB0 6ES7 315-2FH13-0AB0 6ES7 315-2FJ14-0AB0
CPU 315T-2 DP	6ES7 315-6TG10-0AB0 6ES7 315-6TH13-0AB0
CPU 316-2 DP	6ES7 316-2AG00-0AB0
CPU 317-2 DP	6ES7 317-2AJ10-0AB0
CPU 317-2 PN/DP	6ES7 317-2EJ10-0AB0 6ES7 317-2EK13-0AB0 6ES7 317-2EK14-0AB0
CPU 317F-2 DP	6ES7 317-6FF00-0AB0 6ES7 317-6FF03-0AB0
CPU 317F-2 PN/DP	6ES7 317-2FJ10-0AB0 6ES7 317-2FK13-0AB0 6ES7 317-2FK14-0AB0
CPU 317T-2 DP	6ES7 317-6TJ10-0AB0 6ES7 317-6TJ13-0AB0
CPU 318-2 DP	6ES7 318-2AJ00-0AB0
CPU 319-3 PN/DP	6ES7 318-3EL00-0AB0 6ES7 318-3EL01-0AB0
CPU 319-3F PN/DP	6ES7 318-3FL00-0AB0 6ES7 318-3FL01-0AB0

Table 3- 2 Use of the CP with C7 control systems

C7	Order number
C7-613	6ES7 613-1CA01-0AE03 6ES7 613-1CA02-0AE3
CPU 614	6ES7 614-1AH03-0AB3
C7-633 DP	6ES7 633-2BF02-0AE03
C7-635 Key	6ES7 635-2EC01-0AE3 6ES7 635-2EC02-0AE3
C7-635 Touch	6ES7 635-2EB01-0AE3 6ES7 635-2EB02-0AE3
C7-636 Key	6ES7 636-2EC00-0AE3
C7-636 Touch	6ES7 636-2EB00-0AE3

3.2 Project engineering

Software versions

The following version of STEP 7 is required:

Table 3- 3 Configuration tools for the CP 3431 Lean

STEP 7 versions	Function
STEP 7 V5.5, Service Pack 2, Hotfix 1, HSP 1056	Requirement for configuration of the CP with the functions of firmware version 3.0
STEP 7 Professional V11, Service Pack 2, Update 2	Requirement for configuration of the CP with the functions of firmware version 2.2

Locating the support package

You can install the support package from your local file system if it is already stored there or from the Internet pages of Siemens Automation Customer Support.

- STEP 7 V5.5

  You will find the support package (HSP) on the Internet at the following address:

  23183356 (http://support.automation.siemens.com/WW/view/en/23183356)

- STEP 7 Professional V11

  You will find the support package on the Internet at the following addresses:

  28919804 (http://support.automation.siemens.com/WW/view/en/28919804)

  or

  "Link_to_CP_page" (http://support.automation.siemens.com/WW/view/en/18308132)

On the Internet page, select the "Entry list" tab and the "Download" entry type.

Installatio of the support package

- STEP 7 V5.5

  Install the HSP in STEP 7 / HW Config with the "Options" > "Install Hardware Updates" menu command.

  You will find further information in the STEP 7 online help (under "HSP" or "Hardware update"). After installing the HSP, close STEP 7. After restarting STEP 7, the CP is in the catalog of HW Config.

- STEP 7 Professional V11

  Install the support package in STEP 7 using the menu command "Options" > "Support packages".

  The information system of STEP 7 will provide you with information (keyword "Support Packages" or Installing Support Packages"). After installing the support package, close STEP 7. After restarting STEP 7, the CP is in the catalog.

Downloading configuration data

It is possible to download the configuration data to the CP via MPI or LAN/Industrial Ethernet.

GSDML file for configuration in third-party systems

You will find the GSDML file for the CP described here on the Internet under the following entry ID (entry type "Download"):

19698639 (http://support.automation.siemens.com/WW/view/en/19698639)

3.3 Programming

Program blocks

For some communications services, there are preprogrammed program blocks (FCs / FBs) available as the interface in your STEP 7 user program.

Please note the documentation of the program blocks in the online help of STEP 7 or in the manual /10/ (Page 62).

Note

Current block versions

We recommend that you always use the latest block versions for all module types.

You will find information on the current block versions and the current blocks to download from the Internet in our Customer Support area under entry ID:

8797900 (http://support.automation.siemens.com/WW/news/en/8797900)

With older module types, this recommendation assumes that you are using the latest firmware for the particular module type.

LEDs

4

LEDs

The display on the front panel consists of the following LEDs that indicate the operating mode and communications status.

Figure 4-1 LEDs of the CP 343-1 Lean CX10

The LEDs have the following meaning:

- SF: Group error
- BF: Bus fault on Ethernet interface
- DC5V: 5 VDC power supply via the backplane bus (green = OK)
- RX/TX: Acyclic data traffic, for example SEND/RECEIVE
  (not relevant for PROFINET IO data)
- RUN: RUN mode
- STOP: STOP mode
- X1P1: Link status / activity of Ethernet port 1
- X1P2: Link status / activity of Ethernet port 2
- MAINT: maintenance required (note/evaluate diagnostics buffer)

Legend for the following LED tables

The LED symbols in the following tables have the following significance:

Symbol				-
Meaning	ON	OFF	Flashing	any

LEDs for displaying the operating mode

The different combinations of the LEDs on the front panel indicate the status:

Table 4- 1 LEDs: SF, BF, RUN, STOP

SF(red)	BF (red)	RUN (green)	STOP (yellow)	CP operating mode
●	-	○	●	• Starting up after power "ON" or • Stopped (STOP) with errors In this state, the CPU or intelligent modules in the rack remain accessible using PG functions.
○	○	☼	●	Starting up (STOP → RUN)
○	○	●	○	Running (RUN)
○	○	●	☼	Stopping (RUN → STOP)
○	○	○	●	Stopped (STOP) In STOP mode, configuring and performing diagnostics on the CP remain possible.
-	●	-	-	Duplicate IP address detected
-	☼	●	-	The CP is configured as a PROFINET IO device; there is no data exchange with the PROFINET IO controller.
●	○	●	○	Running (RUN) with error. Possible causes: • Event display in conjunction with the MRP function. The CP diagnostics buffer provides detailed information. or • Extended port diagnostics reports an error. Examples: – Current port setting (transmission medium, duplex) does not correspond to the configuration. – Port interconnection does not correspond to the configuration.
●	●	☼	●	Loading using the Firmware Loader is active. *)
●	●	●	●	Firmware activation after loading using the Firmware Loader is active. *)
☼	☼	☼	○	Firmware was successfully downloaded. *)
☼	☼	○	☼	Firmware download aborted. *)
☼	☼	☼	☼	Module fault / system error

*) Does not apply to loading via the update center in Web diagnostics.

The "MAINT" LED

Note

When the "MAINT" LED lights up, important error messages and/or diagnostics interrupts have occurred. The CP continues in RUN mode.

Check the entries in the diagnostics buffer of the device.

LEDs for displaying the CP communications status

In addition to the LEDs that signal the CP state, the following LEDs provide information about the status of the CP interface to Industrial Ethernet.

Table 4- 2 LEDs: RX/TX, X1P1, X1P2

LED	Display	Meaning
RX/TX (green)		The CP is sending/receiving over Industrial Ethernet. Note: PROFINET IO services are not signaled here.
X1P1 / X1P2 (green / yellow)		Port has no connection to Industrial Ethernet.
		Existing connection via port to Industrial Ethernet (LINK status).
		LED flashes yellow (constant light green): Port sending / receiving over Industrial Ethernet or PROFINET IO. Note: All received / sent frames are signaled for each specific port including those simply forwarded by the switch.
		There is permanent data transfer at the port via Industrial Ethernet (e.g. PROFINET IO).

Module identification (PROFINET interface)

Note

Module identification - make the port LEDs flash briefly

With the help of Web diagnostics or the online functions of STEP 7, you can search for and identify the module in the rack. The options for this are as follows:

- In Web diagnostics
  You click the "Flash" button in the update center.
- In STEP 7
  You click the "Flash" button in the "Browse network" dialog

If you click the "Identify" or "Flash" buttons, all the port LEDs of the PROFINET interface flash briefly.

Installation, connecting up and commissioning 5

5.1 Important notes on using the device

Safety notices on the use of the device

The following safety notices must be adhered to when setting up and operating the device and during all associated work such as installation, connecting up, replacing devices or opening the device.

General notices

⚠ WARNING

Safety extra low voltage

The equipment is designed for operation with Safety Extra-Low Voltage (SELV) by a Limited Power Source (LPS). (This does not apply to 100 V...240 V devices.)

This means that only SELV / LPS complying with IEC 60950-1 / EN 60950-1 / VDE 0805-1 must be connected to the power supply terminals. The power supply unit for the equipment power supply must comply with NEC Class 2, as described by the National Electrical Code (r) (ANSI / NFPA 70).

There is an additional requirement if devices are operated with a redundant power supply:

If the equipment is connected to a redundant power supply (two separate power supplies), both must meet these requirements.

General notices on use in hazardous areas

⚠ WARNING

Risk of explosion when connecting or disconnecting the device

EXPLOSION HAZARD

DO NOT CONNECT OR DISCONNECT EQUIPMENT WHEN A FLAMMABLE OR COMBUSTIBLE ATMOSPHERE IS PRESENT.

WARNING

Replacing components

EXPLOSION HAZARD

SUBSTITUTION OF COMPONENTS MAY IMPAIR SUITABILITY FOR CLASS I, DIVISION 2 OR ZONE 2.

WARNING

Requirements for the cabinet/enclosure

When used in hazardous environments corresponding to Class I, Division 2 or Class I, Zone 2, the device must be installed in a cabinet or a suitable enclosure.

WARNING

Restricted area of application

This equipment is suitable for use in Class I, Division 2, Groups A, B, C and D or non-hazardous locations only.

WARNING

Restricted area of application

This equipment is suitable for use in Class I, Zone 2, Group IIC or non-hazardous locations only.

WARNING

LAN attachment

A LAN or LAN segment with the attachments belonging to it should be within a single low-voltage supply system and within a single building. Make sure that the LAN is in an of type A environment according to IEEE 802.3 or in a type 0 environment according to IEC TR 62101.

Never establish a direct electrical connection to TNV networks (telephone network) or WANs (Wide Area Network).

General notices on use in hazardous areas according to ATEX

WARNING

Requirements for the cabinet/enclosure

To comply with EU Directive 94/9 (ATEX95), this enclosure must meet the requirements of at least IP54 in compliance with EN 60529.

WARNING

Suitable cables for temperatures in excess of 70 °C

If the cable or conduit entry point exceeds 70°C or the branching point of conductors exceeds 80°C, special precautions must be taken. If the device is operated at ambient temperatures above 50°C, the permitted temperature range of the selected cable must be suitable for the temperatures actually measured.

WARNING

Protection against transient voltage surges

Provisions shall be made to prevent the rated voltage from being exceeded by transient voltage surges of more than 40%. This criterion is fulfilled, if supplies are derived from SELV (Safety Extra-Low Voltage) only.

5.2 Installing the CP, connecting power and ground

Note

Pulling/plugging

Pulling/plugging the CP when the power is on is not permitted.

You should also remember that by removing a module from the rack, all modules on the other side of it will be disconnected from the CPU.

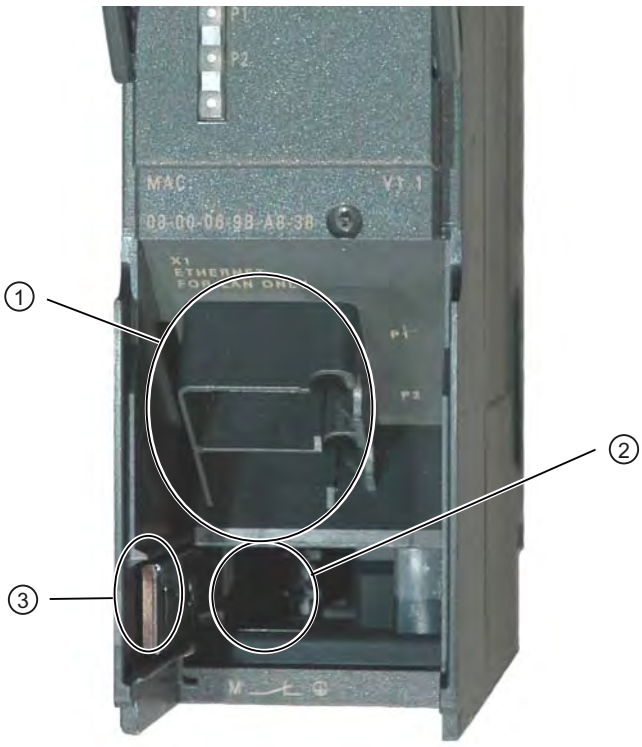

Legend:

1) Attachment to Industrial Ethernet (PROFINET interface): 2 x 8pin RJ45 jack
2) Connecting the power supply
3) Slider for setting the chassis ground connection

Figure 5-1 Connectors of the CP

Ground/chassis ground concept

Note

Note the instructions regarding the grounding and chassis ground concept in the SIMATIC S7 installation guides; see “SIMATIC S7 Programmable Controller S7300 - Installation and Hardware: Installation Manual": /12/ (Page 62)".

Behind the hinged panel on the left of the device, you will see a slider with which you can connect or disconnect the chassis ground of the 24V power supply with reference ground.

- Slider pushed in: Chassis ground and reference ground are connected (caution: you can feel the slider lock into position).
- Slider pulled out: There is no connection between chassis ground and reference ground.

When shipped: Slider pushed in

Use a screwdriver to set the slider.

Installing and connecting up

NOTICE
Ensuring ventilation During installation, make sure that the upper and lower ventilation slits of the module are not obstructed and good ventilation is possible.

1. Install the CP on the S7 standard rail.

   Slots 4 to 11 are permitted for the CP in racks 0 to 3 (connected by IM 360/361). Follow the steps described in detail in /12/ (Page 62) in the sections dealing with installation and wiring.

   Note

   No installation in an expansion rack

   The CP cannot be operated in an expansion rack that is connected via the IM 365. Reason: The required communication bus is not connected to the expansion rack via the IM 365.

2. Establish the connection via the enclosed bus connector to the backplane bus.
3. Connect the CP to the power supply.

   Follow the steps as described in detail in /12/ (Page 62) when wiring between the power supply and the CPU.

NOTICE
Same power supply The CPU, CP and IM (if one exists) must be connected to the same power supply. Only wire up the S7300 / C7300 with the power switched off!

4. Connect the CP to Industrial Ethernet.

   An Ethernet cable can also be inserted and removed with the power supply on.

The remaining steps in commissioning involve downloading the configuration data.

Downloading and addressing

You can connect the PG as follows when downloading the configuration data:

- Via MPI
- Via Industrial Ethernet

  For further details, refer to the general Part A of this manual.

  – Addressing the first time (IP address assignment / node initialization)
  – To download the defined configuration

The PG / PC requires a LAN attachment, for example via a CP 1613 or CP 1411 and must have the necessary software (for example the S71613 package or SOFTNET IE). The TCP/IP protocol must be installed. The protocol used must then be applied to the S7ONLINE access point.

Diagnostics

Use the diagnostic functions during commissioning and to analyze problems. The following options are available:

- The LED displays on the CP
- Hardware diagnostics and troubleshooting with STEP 7
- Communication diagnostics with STEP 7 / NCM Diagnostics
- Static information using HW Config
- Web diagnostics
- If applicable, evaluation of the alarm block FB 54 in the user program
- Queries via SNMP

5.3 Connecting the CP to Ethernet

Connecting interface X1 to Industrial Ethernet

1. Connect the CP to Industrial Ethernet via one of the RJ45 jacks.
2. Where necessary, connect another component to the remaining free RJ45 jack.

Note

Autocrossing mechanism - effects on the connectors

For small local area networks or for attaching several Ethernet devices, a 2port switch has been integrated on the PROFINET interface of the CP.

With the autocrossing mechanism integrated in the switch, it is possible to use a standard cable to connect the PG/PC. A crossover cable is not necessary.

Please note the following points:

- Manual configuration

  If a port is set to manual configuration and autonegotiation is disabled, the autocrossing mechanism is also disabled for this port. Which cable you need to use depends on the partner device (network component or end device).

  In the factory, the ports are set for automatic configuration.

  For more information, refer to section Network settings (Page 38)
- Connecting switches

  If you connect further switches, make sure that no ring is formed in the network.

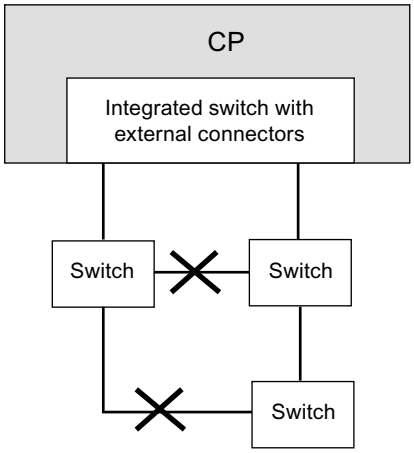

Figure 5-2 Connecting switches

Note

MRP configuration

With an MRP configuration, keep to the setup guidelines for MRP.

You will find examples of network attachments in the general Part A of this manual, see /1/ (Page 60).

Notes on configuration and operation 6

NOTICE
The front panel must be kept closed during operation.

6.1 Project engineering

Project engineering

To set up the CP for communication services, read the information on configuring in the sections Project engineering (Page 23) and Replacing a module without a programming device (Page 51). For detailed information on configuration, refer to Part A of this manual, see References /1/ (Page 60).

6.2 Controlling the mode

You have the option of changing the mode of the CP between RUN and STOP using the STEP 7 configuration software (PLC > Accessible Nodes).

Change from STOP to RUN

The CP loads configured and/or downloaded data into the work memory and then changes to RUN mode.

Change from RUN to STOP

The CP changes to STOP - transitional phase with LED display "Stopping (RUN → STOP").

- Established connections of the open communications services (see also section Communication services (Page 10)) are terminated.
- The following functions are disabled:
  - PROFINET IO
  - Time-of-day synchronization
- The following functions remain enabled:
  - Downloading the configuration data and diagnostics of the CP

    System connections for configuration, diagnostics and PG channel routing still exist.
  - Web diagnostics (HTTP access)
  - Routing function

Module access protection

The configurable module access protection has the following effects on the functions described here:

- Module access protection: Not locked

  The functions cannot be executed.

- Module access protection: Status-dependent

  With this setting, it is only possible to access the CP when the CPU is in STOP mode.

6.3 Network settings

The configuration of the network settings "Transmission medium / Duplex" is made in the properties dialog of the port of the interface in the "Options" tab.

Row "X1P1": Properties of port 1 of the PROFINET interface

Row "X1P2": Properties of port 2 of the PROFINET interface

Automatic setting or individual network settings

As default, the CP is configured for automatic detection (autosensing / autonegotiation / autocrossing).

Note

In normal situations, the basic setting ensures troublefree communication. You should only change this in exceptional situations.

If you create a manual configuration for the CP, the automatic negotiation of the network settings (autonegotiation) is no longer effective. If, on the other hand, the communication partner works with autonegotiation, no communication will be established.

Only use manual configuration when the communication partner works with the same manually set configuration.

Autocrossing mechanism

The automatic setting also includes an "autocrossing" mechanism. With autocrossing, you can connect network components and end devices using either crossover or straight-through cables.

STEP 7 special diagnostics and Web diagnostics display the network setting

Diagnostics of the port settings for the CP described here is possible using the entries in the diagnostics buffer using Web diagnostics, SNMP, STEP 7 diagnostics, and the LED displays.

You will find information on the currently used network settings in STEP 7 as follows:

- In STEP 7 special diagnostics under the diagnostics object "Industrial Ethernet" in the "Network Connection" group box
- in STEP 7 with the menu command "PLC > Module Information"
- In Web diagnostics

Further notes:

- Autocrossover

  If you disable the "Automatic setting" option, autocrossing is disabled; which cable you then use depends on the integration of the CP (network component or end device).

- 10/100 Mbps network components without "autonegotiation"

  If you use 10/100 Mbps network components that do not support "Autonegotiation", it is possible that you will have to set the mode manually in the CP configuration in STEP 7. As default, the CP is configured for automatic detection.

- Forcing a specific network setting instead of "Autonegotiation"

  If your application requires a fixed network setting instead of "Autonegotiation", both partner devices must have the same setting.

- No reaction to Autonegotiation query with manual configuration

  Remember that if you configure the CP manually, it will not react to an autonegotiation query! As a result, a connected partner will not be able to make the required network setting and communication will not be established.

  Example:
  If the CP is set to "100 Mbps full duplex", a CP connected as partner will set itself to "100 Mbps half duplex". Reason: Due to the fixed setting, no autonegotiation response is possible; the connected partner recognizes the 100 Mbps with autosensing but nevertheless remains in half duplex.

- Recommendation: Change "individual network settings" only over MPI

  If you modify the LAN settings in the properties dialog of the CP in the “Port Parameters" tab, these changes will be adopted by the CP and activated when the configuration data is downloaded to the CP. In some situations, the device may then no longer be obtainable over Ethernet.

  We therefore recommend that you download configuration data to the S7 station over an MPI connection if you change this setting.

  If you download the configuration data over the LAN interface then, depending on the selected setting, it is possible that the current download will not be completed due to the changes to the configuration taking immediate effect and an inconsistent configuration is reported.

  Example:
  The download is started initially with the setting TP/ITP at 10 Mbps half duplex. If the "Individual network setting" is now changed to 100 Mbps full duplex, the download cannot be completed.

6.4 Influence of MPI on connections via Industrial Ethernet

Adding/removing MPI nodes

If a station on the MPI bus is added or removed, for example because a service PG has been connected or disconnected, it is possible that active communication connections on the communications bus are aborted. This has the following effects on the communication connections on Industrial Ethernet:

- All S7 connections are temporarily aborted.

  Exceptions: This does not apply when using CPUs with a separate communication bus, for example:

  CPU 318-2, CPU 317-2 PN/DP, CPU 319-3 PN/DP, CPU 315-2 PN/DP, CPU 315F-2 PN/DP, CPU 317-2 DP, CPU 317T-2 DP, CPU 317F-2 DP, CPU 317F-2 PN/DP, CPU 319-3 PN/DP

- FETCH/WRITE connections are temporarily aborted.

On the FC interface in the user program, the condition codes made up of the DONE, ERROR and STATUS parameters must be evaluated in FC11 / FC12.

6.5 PROFINET IO when operating other services at the same time

Sporadically used services

Note the following if you are using functions alongside PROFINET IO that affect the configuration or the operating status (FB55, Primary Setup Tool, STEP 7, NCM Diagnostics):

Note

The functions listed above can influence the flow in PROFINET IO so that an interruption of cyclic IO data exchange of the PROFINET IO devices lasting several seconds may occur.

6.6 Effects of multicast communication on RT communication

Note

If PROFINET IO RT communication is operated at the same time as broadcast (BC) or multicast (MC) in an industrial Ethernet subnet, RT frames can be delayed by long BC frames or MC frames.

Among other things, these frames can be generated by the communications FCs AG_SEND or AG_RECV.

With certain constellations, this can lead to a PROFINET RT communication abort. The factors that influence this are the switch configurations ("switch depth"), the update time and the MC/BC frame lengths.

You will find further information about the influencing factors as well as possible solutions in:

29104898 (http://support.automation.siemens.com/WW/view/en/29104898)

6.7 IP configuration

6.7.1 Detection of double IP addressing in the network

To save you timeconsuming troubleshooting in the network, the CP detects double addressing in the network.

The reaction of the CP when double addressing is detected varies as follows:

- CP during startup

  When the CP starts up (following a power down or after assigning an Ethernet address), a query for its own IP address is sent into the network. If a response is sent in reply, the CP does not start up! The error is indicated by the LEDs ("Stopped (STOP) with error" + "BF" LED is displayed) and an entry is made in the internal diagnostics buffer.

  The CP remains in STOP mode.

  When you eliminate the cause by removing the device with the same IP address or by changing its address, you then need to restart the CP.

- CP in RUN mode

  If a double IP address is detected, the CP also reports this via the LED (BF) and generates an entry in the diagnostics buffer.

  The CP remains in RUN mode.

  If the conflict is eliminated on another component, the "BF" LED goes off again.

6.7.2 Obtain IP address vie DHCP: CP STOP on expiry of the lease

If you have configured “Obtain IP address from a DHCP server", when the CP starts up, it is assigned a valid IP address by the DHCP server for a restricted time (period of the lease).

Note

STOP on expiry of the lease

The CP changes to STOP and loses the previously assigned IP address if the DHCP server does not extend it before expiry of the lease. All communication connections are terminated.

6.8 Media redundancy

You can use the CP in a ring topology with media redundancy. The CP can only be a redundancy client.

For more detailed information on configuration, refer to the online help of the "Media redundancy" tab and Part A of the manual, see /1/ (Page 60).

6.9 Timeofday synchronization

General rules

The CP supports the two modes explained below for timeofday synchronization:

- SIMATIC mode
- NTP mode (NTP: Network Time Protocol)

  No automatic changeover to daylight saving time is defined in NTP. As a result, you may need to implement this changeover using a program application.

Project engineering

For more detailed information on configuration, refer to the online help of the "Time-of-day synchronization" parameter group and in Part A of the manual /1/ (Page 60).

6.10 SNMP agent

SNMP (Simple Network Management Protocol)

SNMP is a protocol for managing networks. To transmit data, SNMP uses the connectionless UDP protocol.

The information on the properties of SNMPcompliant devices is entered in MIB files (MIB = Management Information Base).

The CP supports data queries via SNMP in Version 1. It returns the contents of certain MIB objects according to the MIB II standard, LLDP MIB, Automation System MIB and MRP Monitoring MIB.

MIB file and SNMP profile file

You will find the MIB file and the SNMP profile file of the module in the STEP 7 installation in the folders "S7DATA" > "snmp" under the name of the module.

Further information

For more detailed information on working with MIB files, refer to the documentation of the SNMP client you are using (example of an SNMP client: SNMP OPC server from SIMATIC NET).

You will find more information on MIBs on the following SIMATIC NET Internet page:

15177711 (http://support.automation.siemens.com/WW/news/en/8797900)

Supported MIBs

The CP supports the following groups of MIB objects of the standard MIB II according to RFC1213:

- System
- Interfaces
- Address Translation (AT)
- IP
- ICMP
- TCP
- UDP
- SNMP

The other groups of the MIB II standard are not supported:

- EGP
- Transmission

The CP also supports the LLDPMIB according to IEEE 802.1AB, the PROFINET expansions of the LLDPMIB (see also IEC 61158106), the Automation System MIB and the MRP Monitoring MIB.

Exceptions / restrictions:

- Write access is permitted only for the following MIB objects of the system group:
  - sysContact
  - sysLocation
  - sysName

    A set sysName is sent as the host name using DHCP option 12 to the DHCP server to register with a DNS server.

  For all other MIB objects / MIB object groups, only read access is possible for security reasons.
- Traps are not supported by the CP.

"Interfaces" MIB group

This group returns status information about the CP interfaces. The MIB objects of the ifTable provide the status information of the interfaces. The "ifIndex" object identifier is assigned to the CP interfaces as follows:

Table 6- 1 Assignment of ifIndex

ifIndex	Type of interface
1-2	Port 1-2
3	Internal CP interface

Access permissions using community name

The CP uses the following community names to control the access rights in the SNMP agent:

Table 6- 2 Access rights in the SNMP agent

Type of access	Community name *)
Read access	public
Read and write access	private

*) Note the use of lowercase letters!

MIB files for your SNMP tools

If you use an SNMP tool, you will find the MIB files relevant to the CP in the STEP 7 installation in the following folder:
`<Drive>\<Installation folder>\Siemens\Step7\S7DATA\snmp\mib`

For the Automation System MIB, for example, these are the following files:

- automationPS.mib
- automationSmi.mib
- automationSystem.mib
- automationTC.mib

6.11 Possible security gaps on standard IT interfaces: preventing unauthorized access

With various SIMATIC NET components, such as switches, a wide range of parameter assignment and diagnostics functions (for example, Web servers, network management) are available using open protocols and interfaces. The possibility of unauthorized misuse of these open protocols and interfaces by third parties, for example to manipulate data, cannot be entirely excluded.

When using the functions listed above and these open interfaces and protocols (for example, SNMP, HTTP), you should take suitable security measures to prevent unauthorized access to the components and the network particularly from within the WAN/Internet.

Note

We expressly point out that automation networks must be isolated from the rest of the company network by suitable gateways (for example using tried and tested firewall systems). We do not accept any liability whatsoever, whatever the legal justification, for damage resulting from nonadherence to this notice.

If you have questions on the use of firewall systems and IT security, please contact your local Siemens office or representative. You will find the address in the SIMATIC catalog IK PI or on the Internet at the following address:

(http://www.automation.siemens.com/partner/guisearch.asp)

6.12 Programmed communication connections

6.12.1 Programmed communication connections with FB55 IP_CONFIG

Downloading the configuration using FB55 IP_CONFIG

IP_CONFIG allows programcontrolled transfer of the configuration data.

Note

If the CP is in PG STOP mode and the configuration is downloaded using IP_CONFIG, the CP then changes automatically to RUN.

6.12.2 Programmed communications connections - assigning parameters to the ports

The CP supports the following settings when assigning parameters to the ports in the parameter block for TCP connections and UDP connections:

- SUB_LOC_PORT parameter

  The port can be specified as an option when the connection is established actively.

- SUB_REM_PORT parameter

  The port can be specified as an option when the connection is established passively.

6.13 Permitted length of ICMP packets

Permitted length of ICMP packets

Pings with a packet size of more than 1000 bytes are evaluated as an attack and filtered by the CP. This response is intentional and improves the robustness of the CP in an industrial environment.

Service and maintenance 7

7.1 Memory reset / reset to factory defaults

If the CP was configured with the "Status-dependent" protection level, the following two functions are available only when the CPU is in STOP mode. You will find a setting in the properties dialog of STEP 7 > "Options" > Module access protection tab.

Available functions

The CP has a twolevel function available for resetting memory:

- Memory reset

  Following this memory reset, the CP retains the preset MAC address and the retentive parameters. The CP is therefore immediately ready for downloads using the IP address.

  The retentive parameters include:

  – IP address, subnet mask and, if applicable, router address

  – LAN settings

- Reset to factory settings

  After resetting, the CP only contains the default MAC address (as shipped).

Note

The functions for memory reset and resetting to defaults described here do not change the configuration data on the CPU!

If you subsequently upload the configuration data from the CPU to a PG you will always obtain the configuration data that was previously on the CP (with parameters, connections, IP address).

How to use the function

You can start the memory reset functions in STEP 7.

- Memory reset

  – In STEP 7 V5.5 with the menu command "PLC" > "Clear/Reset"

  – In STEP 7 special diagnostics with the "Operating Mode" > "Clear/Reset Module" menu command

  – In STEP 7 Professional V11 with STEP 7 special diagnostics

- Reset to factory settings
  - In STEP 7 V5.5 with the menu command "PLC" > "Edit Ethernet Node..." > Select CP > "OK" > "Reset to Factory Defaults"
  - In STEP 7 special diagnostics with the "Operating Mode" > "Reset to Factory Settings" menu command
  - In STEP 7 Professional V11 with "Online > Online & Diagnostics > Functions > Reset to Factory Settings"

Behavior after a memory reset

The CPU in the S7 station does not recognize that the CP memory was reset. The CP therefore changes to the "Stopped (STOP) with error" state (see LEDs (Page 25)).

The configuration data must then be reloaded. The download of the configuration data can be initiated by cycling the power supply (OFF → ON).

7.2 Loading new firmware

Options for a firmware update

The following alternative methods can be used to download new firmware to a SIMATIC NET CP:

- Using the firmware loader supplied with STEP 7

  Requirement for downloading:
  - To download firmware, you require an Industrial Ethernet CP module in the PG/PC (for example, CP 1613) or a normal Ethernet module with the "Softnet" software package.
  - The S7ONLINE interface must be set to the "ISO - Industrial Ethernet" protocol. It is not possible to download using TCP/IP (and therefore not to other networks).
- Via the update center in the Web diagnostics of the CP

  With this method, the CP remains in RUN mode.

  You can reach the update center using Web diagnostics.

  Requirement: The option "Firmware download via Web" is selected in the configuration.

Both options for loading the firmware are described in the manual Part A, see /1/ (Page 60).

LED displays when loading a firmware file

The LED combinations when loading a firmware file using the STEP 7 firmware loader can be found in the section LEDs (Page 25).

When loading a firmware file using the update center in Web diagnostics, the LEDs of the CP remain unchanged.

If the loading with the firmware loader is interrupted, you should react as follows:

Disturbances or collisions on the network can lead to packets being lost. In such cases, this can lead to an interruption of the firmware download. The firmware loader then signals a timeout or negative response from the module being loaded.

In this case, turn the station off and on again and repeat the download.

7.3 Replacing a module

Note

Recommendation to reset address data if the use of the CP is changed

The following data is stored permanently on the CP:

- IP parameters when using DHCP

If the CP has already been operated in your plant and you want to use it at a different location in the plant, it starts up with the permanently configured parameters.

If the CP has been used previously in your plant or has been repaired, delete all stored data by resetting to the factory settings.

7.3.1 Replacing older modules

Distinction

When replacing existing modules with the module described here, the following variants must be distinguished:

- **Replacing a module**

  Describes the situation when an existing module can be replaced with a new module simply by pulling/plugging without changing the configuration.

- **Upgrading**

  (module replacement with compatible functions)

  Describes the situation when the module described here can be used instead of an older module as long as adaptations are made to the configuration. Here, the previously used CP needs to be replaced in the configuration by the new CP.

Unless otherwise specified, the range of functions of the older module continues to be supported.

You can also upgrade modules listed in "Module replacement". This is necessary when new characteristics that were not available in the previously used module are required.

7.3.2 module replacement / upgrading

Replacing a module

The CP 343-1 Lean described here (6GK7 343-1CX10-0XE0 firmware version 3.0) can be used as a replacement for the following predecessor products:

- CP 343-1 Lean (6GK7 343-1CX00-0XE0)

  When replacing a CP 343-1 Lean (CX00) with a CP 343-1 Lean (CX10) and a STEP 7 version < V5.4, all the previous functions remain available. Any port settings made for Ethernet are adopted for port 1.

  The additional second RJ-45 port is also available in the "Automatic setting" mode.

- CP 343-1 Lean (6GK7 343-1CX10-0XE0, firmware version V1.0, V2.x)

All previous functions remain available. In addition, the new functions compared with the firmware version of the previous product are also available.

Upgrading

The following predecessor products can be upgraded on the CP 343-1 Lean (6GK7 343-1CX10-0XE0) described here.

Refer to modules in "Replacing modules".

Interface in the user program

Note

You should always use the latest block versions for new user programs. You will find information on the current block versions and the current blocks for downloading on the Internet under:

8797900 (http://support.automation.siemens.com/WW/news/en/8797900)

Module replacement

Please follow the procedure below when replacing an older module with the module described here:

Table 7- 1 Replacing an older module

Originally configured module	Configuration procedure
6GK7 343-1CX00-0XE0	**Case a: Configuration unchanged / module replacement** If you have no requirements beyond what you had with the previous CP (for example PROFINET IO mode), you do not need to make changes in the configuration. **Case b: Adapted configuration / upgrade** If you want to use the extended options of the new CP, follow the steps below: 1. Replace the previously configured CP with the new module in STEP 7 / HW Config. You will find this in the hardware catalog. 2. Expand the configuration according to your requirements, for example by enabling the CP for PROFINET IO device mode. 3. Save, compile and download the configuration data to the CPU again.

7.3.3 Replacing a module without a programming device

Replacing the CP with the same or a previous module

- Replacing with the same module

  The configuration data of the CP is stored on the CPU. Replacing the CP with a module of the same type (identical order number) is therefore possible without a PG.

- Replacing with a previous module

  For information on replacing previous modules, refer to the information in section module replacement / upgrading (Page 50).

Module replacement: Special feature of IP address assignment from a DHCP server

During configuration of the CP you can specify the IP configuration in the properties dialog; one option is to obtain the IP address from a DHCP server.

Note

When replacing modules, please remember that the factoryset MAC address of the new module is different from the previous module. When the factoryset MAC address of the new module is sent to the DHCP server, this will return either a different or possibly no IP address.

Ideally, you should therefore configure IP as follows:

Always configure a client ID if you want to obtain the same IP address from the DHCP server after replacing the module.

Technical specifications

8

Table 8- 1 Technical specifications

Technical specifications		
Attachment to Industrial Ethernet		
Number	1 x PROFINET interface with 2port switch	
Execution	Connector	2 x RJ-45 jacks
	Transmission rate	10 / 100 Mbps
		When working with PROFINET IO and cyclic transfer, the transmission speed of 100 Mbps full duplex is mandatory.
	Aging time	5 minutes
	Special features of the X1P1R and X1P2R ports	Integration in ring topology / MRP possible
Electrical data		
Supply voltage	External power supply	24 VDC
	Permitted range	+20.4 V to +28.8 V
	From backplane bus	5 VDC
Current consumption	From external power supply	200 mA maximum
	From backplane bus	200 mA maximum
Effective power loss	5.8 W	
Permitted ambient conditions		
Ambient temperature	During operation with the rack installed horizontally	0 °C to +60 °C
	During operation with the rack installed vertically	0 °C to +40 °C
	During storage	-40 °C to +70 °C
	During transportation	-40 °C to +70 °C
Relative humidity	During operation	≤ 95 % at 25 °C, no condensation
Operating altitude	During operation	≤ 2,000 m above sea level
Contaminant concentration	Acc. to ISA-S71.04 severity level G1, G2, G3	
Design, dimensions and weight		
Module format	Compact module for S7-300, single width	
Degree of protection	IP20	
Weight	Approx. 220 g	
Dimensions (W x H x D)	40 x 125 x 120 mm	
Installation options	Mounting in an S7-300 rack	
Product functions *		

* You will find the product functions in the section Properties / services (Page 9).

For further data, refer to section Performance data (Page 15)

In addition to this, all the information in the "SIMATIC S7-300 Automation System Module Data" see /12/ (Page 62) in the section "General Technical Specifications" on the topics listed below applies to the CP:

- Electromagnetic compatibility
- Transportation/storage conditions
- Mechanical and climatic environmental conditions
- Information on insulation checks, protection class and degree of protection

Approvals

A

Approvals issued

Note

Issued approvals on the type plate of the device

The specified approvals apply only when the corresponding mark is printed on the product. You can check which of the following approvals have been granted for your product by the markings on the type plate.

Approvals for shipbuilding are not printed on the device type plate.

Current approvals on the Internet

SIMATIC NET products are regularly submitted to the relevant authorities and approval centers for approvals relating to specific markets and applications.

You will also find the current approvals for the product on the Internet pages of Siemens Automation Customer Support under the following entry ID:

(http://support.automation.siemens.com/WW/view/en/18308132)
→ "Entry list" tab, entry type "Certificates"

Approvals for SIMATIC NET products

You will find an overview of the approvals for SIMATIC NET products including approvals for shipbuilding on the Internet pages of Siemens Automation Customer Support under the following entry ID:

57337426 (http://support.automation.siemens.com/WW/view/en/57337426)

EC declaration of conformity

The product meets the requirements and safety objectives of the following EC directives and it complies with the harmonized European standards (EN) for programmable logic controllers which are published in the official documentation of the European Union:

- EC Directive 2004/108/EEC "Electromagnetic Compatibility" (EMC Directive)
  - Immunity - EN 61000-6-2 : 2005
  - Emission - EN 61000-6-4 +A1: 2007/2011

  The device is designed for use in an industrial environment.

- EC directive 94/9/EC "Equipment and protective systems intended for use in potentially explosive atmospheres" (ATEX Explosion Protection Directive)
  - EN 60079-0:2006: Potentially explosive atmosphere - general requirements
  - EN 60079-15: 2005: Type of protection 'n'
- EC directive 2006/95/EEC "Electrical Equipment Designed for Use within Certain Voltage Limits" (Low Voltage Equipment Directive)
  - EN 61131–2 / IEC 61131–2 (programmable logic controllers, part 2: equipment requirements and verifications)

The EC Declaration of Conformity is available for the responsible authorities according to the above-mentioned EC Directive at the following address:

Siemens Aktiengesellschaft
Industry Automation
Industrielle Kommunikation SIMATIC NET
Postfach 4848
D-90327 Nürnberg

You will find the EC Declaration of Conformity for this product on the Internet at the following address:

21687867 (http://support.automation.siemens.com/WW/view/en/21687867)
→ "Entry list" tab
Filter settings: Entry type "Certificates", Certificate Type "Declaration of Conformity"

ATEX approval

WARNING

Installation guidelines

The product meets the requirements if you keep to the following during installation and operation:

- The notes in the section Installation, connecting up and commissioning (Page 29)
- The installation instructions in the document /12/ (Page 62)

ATEX approval: II 3 G Ex nA II T4

Test number: KEMA 03ATEX1228 X

Relevant standards:

- EN 60079-0:2006: Potentially explosive atmosphere - general requirements
- EN 60079-15:2005: Electrical apparatus for explosive gas atmospheres; type of protection 'n'

The device is suitable for use in environments with polution degree 2.

The device is suitable for use only in environments that meet the following conditions:

- Class I, Division 2, Group A, B, C, D and areas where there is no risk of explosion
- Class I, Zone 2, Group IIC and areas where there is no risk of explosion

cULus HAZ.LOC. approval

Underwriters Laboratories Inc.

cULus Listed 7RA9 IND. CONT. EQ. FOR HAZ. LOC.:

- UL 508 (Industrial Control Equipment)
- UL 1604 (Hazardous Location)
- CSA C22.2 No. 142 (Pocess Control Equipment)
- CSA C22.2 No. 213 (Hazardous Location)

APPROVED for Use in:

- Cl. 1, Div. 2, GP. A, B, C, D T4A; Ta = 0 °C...60 °C
- Cl. 1, Zone 2, GP. IIC T4; Ta = 0 °C...60 °C

FM approval

Factory Mutual Research (FM):
Approval Standard Class Number 3611
APPROVED for Use in:
Class I, Division 2, Group A, B, C, D, Temperature Class T4A; Ta = 0 °C...60 °C
Class I, Zone 2, Group IIC, Temperature Class T4; Ta = 0 °C...60 °C

Notice for Australia (C-TICK)

AS/NZS 2064 (Class A)

Notice for Korea (KCC)

KCC-REM-S49-S7300CP

References

B

Finding the SIMATIC NET documentation

- **Catalogs**

  You will find the order numbers for the Siemens products of relevance here in the following catalogs:

  – SIMATIC NET Industrial Communication / Industrial Identification, catalog IK PI

  – SIMATIC Products for Totally Integrated Automation and Micro Automation, catalog ST 70

  You can request the catalogs and additional information from your Siemens representative.

  You can go to the Industry Mall on the Internet at the following address:

  Catalog (https://eb.automation.siemens.com/goos/catalog)

- **Documentation on the Internet**

  You will find SIMATIC NET manuals on the Internet pages of Siemens Automation Customer Support:

  Link to Customer Support (http://support.automation.siemens.com/WW/view/en)

  Enter the entry ID of the relevant manual as the search item. The ID is listed below some of the reference entries in brackets.

  As an alternative, you will find the SIMATIC NET documentation on the pages of Product Support:

  10805878 (http://support.automation.siemens.com/WW/view/en/10805878)

  Go to the required product group and make the following settings:

  "Entry list" tab, Entry type "Manuals / Operating Instructions"

- **Documentation from the STEP 7 installation**

  Manuals that are included in the online documentation of the STEP 7 installation on your PG/PC can be found in the start menu ("Start" > "SIMATIC" > "Documentation").

B.1 On configuring, commissioning and using the CP

/1/

SIMATIC NET
S7 CPs for Industrial Ethernet
Configuring and Commissioning
Manual Part - General Application
Configuration Manual
Siemens AG
(SIMATIC NET Manual Collection)
On the Internet under the following entry ID:
30374198 (http://support.automation.siemens.com/WW/view/en/30374198)

/2/

SIMATIC NET
Version history / current downloads for the SIMATIC NET S7 CPs
History document
Siemens AG
(SIMATIC NET Manual Collection)
On the Internet under following entry ID:
9836605 (http://support.automation.siemens.com/WW/view/de/9836605)

B.2 For configuration with STEP 7 / NCM S7

/3/

SIMATIC NET
NCM S7 for Industrial Ethernet
Primer
Siemens AG
(part of the online documentation in STEP 7)

/4/

SIMATIC NET
Commissioning PC Stations - instructions and getting started
Configuration manual
Siemens AG
(SIMATIC NET Manual Collection)
On the Internet under following entry ID:
13542666 (http://support.automation.siemens.com/WW/view/de/13542666)

/5/

SIMATIC
Configuring Hardware and Connections with STEP 7
Siemens AG
Part of the documentation package "STEP 7 Basic Knowledge"
(Part of the online documentation in STEP 7)

B.3 On programming

/6/

Version history of the SIMATIC NET function blocks and functions for SIMATIC S7
Reference document
Siemens AG
(SIMATIC NET Manual Collection)
On the Internet under following entry ID:
9836605 (http://support.automation.siemens.com/WW/view/de/9836605)

/7/

SIMATIC
Programming with STEP 7
Siemens AG
(Part of the STEP 7 documentation package STEP 7 Basic Knowledge)
(Part of the online documentation in STEP 7)
On the Internet under the following entry ID:
18652056 (http://support.automation.siemens.com/WW/view/de/18652056)

/8/

SIMATIC
System and Standard Functions for S7-300/400 - Volume 1/2
Reference manual
Siemens AG
(Part of the STEP 7 documentation package STEP 7 Basic Knowledge)
(Part of the online documentation in STEP 7)
On the Internet under the following entry ID:
1214574 (http://support.automation.siemens.com/WW/view/de/1214574)

/9/

SIMATIC NET
Industrial Communication with PG/PC Volume 1 - Basics
System manual
Siemens AG
(SIMATIC NET Manual Collection)
On the Internet under following entry ID:
42783968 (http://support.automation.siemens.com/WW/view/de/42783968)

SIMATIC NET
Industrial Communication with PG/PC Volume 2 - Interfaces
Programming manual
Siemens AG
(SIMATIC NET Manual Collection)
On the Internet under following entry ID:
42783660 (http://support.automation.siemens.com/WW/view/de/42783660)

/10/

SIMATIC NET
Program blocks for SIMATIC NET S7 CPs
Programming Manual
Siemens AG
(SIMATIC NET Manual Collection)

On the Internet under the following entry ID:
30564821 (http://support.automation.siemens.com/WW/view/en/30564821)

/11/

Automatisieren mit STEP 7 in AWL und SCL (ISBN: 978-3-89578-280-0) /
Automating with STEP 7 in STL and SCL (ISBN: 978-3-89578-295-4)
User manual, programming manual
Berger, Hans
Publicis KommunikationsAgentur GmbH, GWA, 2006

B.4 On installing and commissioning the CP

/12/

SIMATIC S7
Automation System S7-300

- CPU 31xC and 31x Installation: Operating instructions
  Entry ID: 13008499
- Module Data: Reference manual
  Entry ID: 8859629

Siemens AG

and

SIMATIC S7
Automation System S7-400, M7-400

- Installation: Installation manual
  Entry ID: 1117849
- Module Data: Reference manual
  Entry ID: 1117740

Siemens AG

B.5 For application and configuration of PROFINET IO

/13/

SIMATIC
PROFINET System Description
System manual
Siemens AG
(SIMATIC NET Manual Collection)
On the Internet under following entry ID:
19292127 (http://support.automation.siemens.com/WW/view/en/19292127)

/14/

SIMATIC
From PROFIBUS DP to PROFINET IO
Programming manual
Siemens AG
(SIMATIC NET Manual Collection)

B.6 On IT security

/15/

You will find further information on IT security and on data security in industrial communication on the following Internet pages of Siemens AG:
(http://www.automation.siemens.com/mcms/industrial-communication/en/ie/industrial-ethernet-security)

B.7 On setting up and operating an Industrial Ethernet network

/16/

SIMATIC NET
Industrial Ethernet - Network Manual
system manual
Siemens AG
Entry ID:
27069465 (http://support.automation.siemens.com/WW/view/en/27069465)

B.8 SIMATIC and STEP 7 basics

/17/

SIMATIC
Communication with SIMATIC
system manual
Siemens AG
Entry ID:
25074283 (http://support.automation.siemens.com/WW/view/en/25074283)

/18/

Documentation package "STEP 7 Basic Knowledge"

- Working with STEP 7 Getting Started (ID: 18652511)
- Programming with STEP 7 (ID: 18652056)
- Configuring Hardware and Connections with STEP 7 (ID: 18652631)
- From S5 to S7, Converter Manual (ID: 1118413)

Siemens AG
Order number 6ES7 810-4CA08-8AW0

(part of the online documentation in STEP 7)

B.9 Other topics

/19/

Ethernet, IEEE 802.3 (ISO 8802-3)
(http://www.ieee.org)

/20/

RFC 1006 (ISO Transport Service on top of the TCP Version: 3)
Request For Comment
(http://www.ietf.org)

/21/

RFC 793 (TCP)
(http://www.ietf.org)

/22/

RFC 791 (IP)
(http://www.ietf.org)

Index

A

Abbreviation "CX",
Addressing, 33
ATEX, 30

C

Cabinet, 30
Cables for temperatures in excess of 70 °C, 31
Connection and system diagnostics, 4
CX (abbreviation), 9

D

Diagnostics, 34
Download, 33
Downloads, 5

F

FETCH/WRITE
    Access coordination, 4

G

Glossary, 5
GSDML file, 24

H

Hazardous area, 29
Hazardous areas according to ATEX, 30

I

IP configuration, 4

M

MAC address, 4, 49
Manual Collection, 5

O

Open communications services, 4

P

Ping, 46
PROFIenergy, 9
Programmed connections and IP configuration, 4
Protection against transient voltage surges, 31

R

Replacing components, 30

S

Safety extra low voltage, 29
Safety notices, 29
SIMATIC NET glossary, 5
SIMATIC NET Manual Collection, 5
STEP 7, 4
STEP 7 version, 9, 23

V

Version history, 5

© Siemens AG 2007

Technical specifications (continued)

	6ES7 357-4AH01-0AE0
Positioning	
Programmable traverse speed, max.	1,000 m/min
Drive interface	
Signal output I	
• Type	5 V difference signal (phys. RS 422)
• Function	Direction, enable, clock pulse
• Differential output voltage, min.	2 V; RL = 100 Ohm
• Differential output voltage for signal "0", max.	1 V; Io = 20 mA
• Differential output voltage, for signal "1", min.	3.7 V; Io = -20 mA
• Pulse frequency	750 kHz
• Cable length, max.	50 m; 35 m in hybrid mode with servo axes
Signal output II	
• Type	Controller release (contact), FM-READY output (contact)
• Function	Drive disconnection for operation via contact relay, Data set ready for link with Emergency STOP
• Load	1 A/50 V/30 VA DC

	6ES7 357-4AH01-0AE0
Signal output III	
• Type	Analog output
• Function	Drive interface for analog drives: setpoint output for drive
• Output voltage	-10 to +10 V
• Output current	-3 to +3 mA
• Cable length, max.	35 m
Isolation	
Isolation, digital outputs	
• Galvanic isolation, digital outputs	Yes
Galvanic isolation, digital inputs	
• galvanic isolation, digital inputs	Yes
Dimensions and weight	
Width	200 mm
Height	125 mm
Depth	118 mm
Weights	
Weight, approx.	1,200 g

Ordering data

	Order No.
FM 357-2 positioning module B)	**6ES7 357-4AH01-0AE0**
Basic unit	
System firmware	
incl. configuration package on CD-ROM, German, English, French, Italian, consisting of equipment manual (electronic), configuring software (parameterization screenforms, standard blocks, operator control and monitoring screenforms for OP17/OP27)	
FM 357-2L system firmware	**6ES7 357-4AH03-3AE0**
On memory card	
FM 357-2LX system firmware	**6ES7 357-4BH03-3AE0**
With additional functions; on memory card	
FM 357-H system firmware	**6ES7 357-4CH03-3AE0**
With additional functions for the handling sector; on memory card	
FM 357-2 manual	
German	**6ES7 357-4AH00-8AG0**
English	**6ES7 357-4AH00-8BG0**
French	**6ES7 357-4AH00-8CG0**
Italian	**6ES7 357-4AH00-8EG0**

	Order No.
Edit FM	**6FC5 263-0AA03-0AB0**
Program editor for editing, loading and saving NC programs with the standard programming device/PC; German/English, on CD-ROM	
Connecting cables and encoders	see catalogs NC 60, CA 01 or in the A&D Mall
Front connector	
40-pin, with screw contacts	
• 1 unit	**6ES7 392-1AM00-0AA0**
• 100 units	**6ES7 392-1AM00-1AB0**
40-pin, with cage clamp terminals	
• 1 unit	**6ES7 392-1BM01-0AA0**
• 100 units	**6ES7 392-1BM01-1AB0**
Back-up battery	**6ES7 971-1AA00-0AA0**
Li-Ion, 3.6 V/0.95 Ah	
Signal cable	
Pre-assembled for SSI absolute encoder, UL/DESINA	**6FX5 0■2-2CC11-■■■■**
Pre-assembled for TTL encoder 6FX2001-1, UL/DESINA	**6FX5 0■2-2CD01-■■■■**
Pre-assembled for TTL encoder 24 V, UL/DESINA	**6FX5 0■2-2CD24-■■■■**
Length code	see FM 351, page 4/154

B) Subject to export regulations: AL: N and ECCN: 4A994

REUSE OF DOCUMENTS: This document, and the information incorporated herein, as an instrument of professional service, is the property of Technical Systems, Inc. and is not to be used, in whole or in part, for any other project without the written authorization of Technical Systems, Inc.

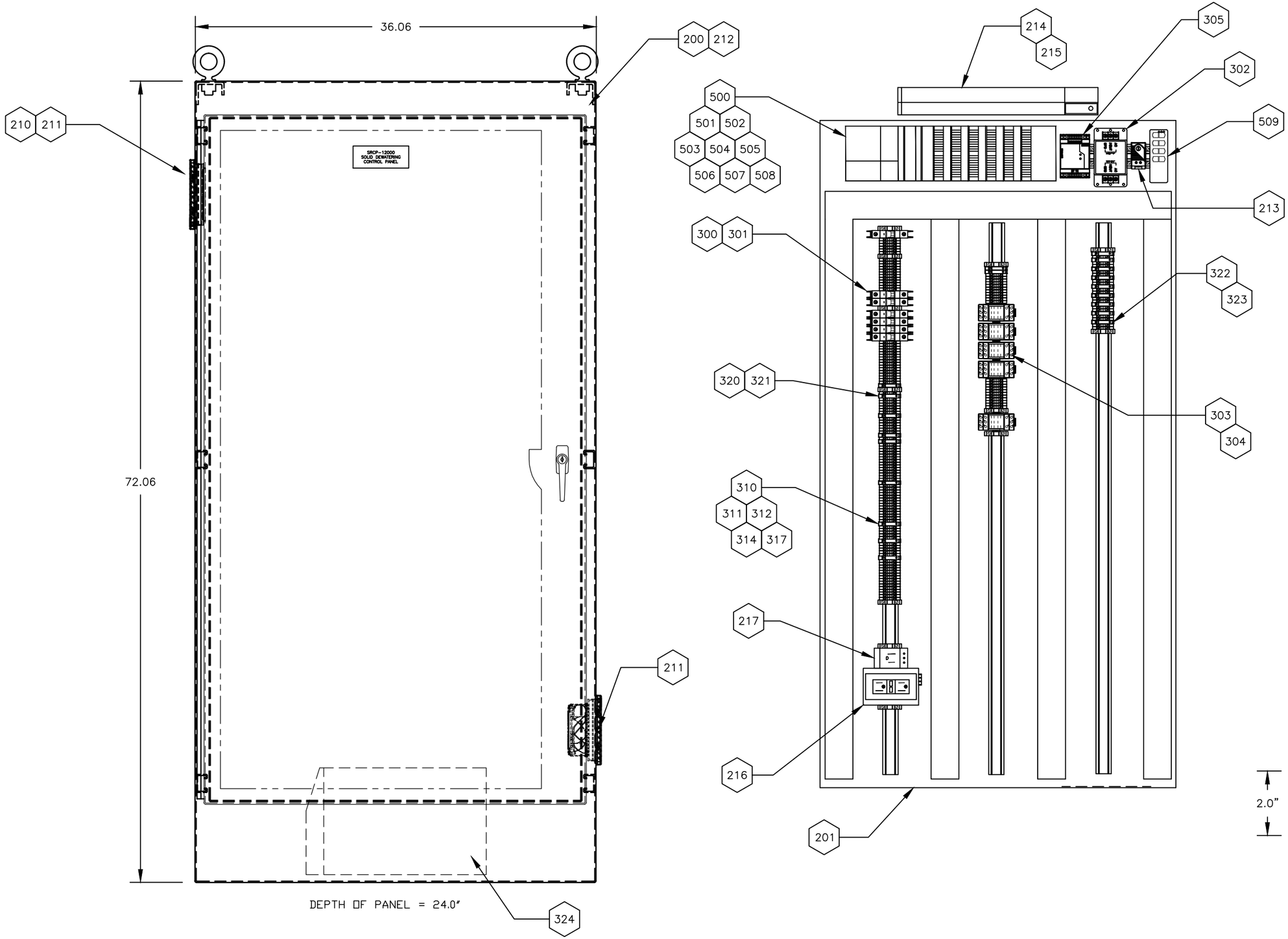

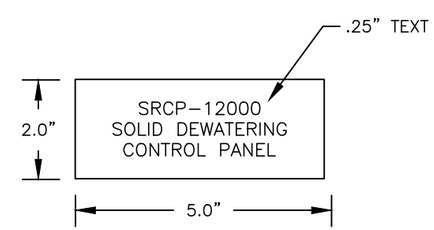

REV	DESCRIPTION/INIT	DATE
3	SHOP AS-BUILT/AZ	7/10/12

LISTING
- ■ UL508 S/N CE-125027
- ☐ ETL
- ☐ OTHER

TSI Technical Systems Inc.
2303 196TH ST. S.W.
LYNNWOOD, WA. 98036
(425) 775-5696

CUSTOMER: Magnum Electric

DESIGN / CHKD: TP/LS

DRAWN:

WENATCHEE WWTP IMPROVEMENTS, WA

SRCP-12000 SCREENING CONTROL PANEL
PLC PANEL
PANEL LAYOUT

DATE: 1/5/12
JOB NO. 7374
DWG. NO. J01
REV. 3

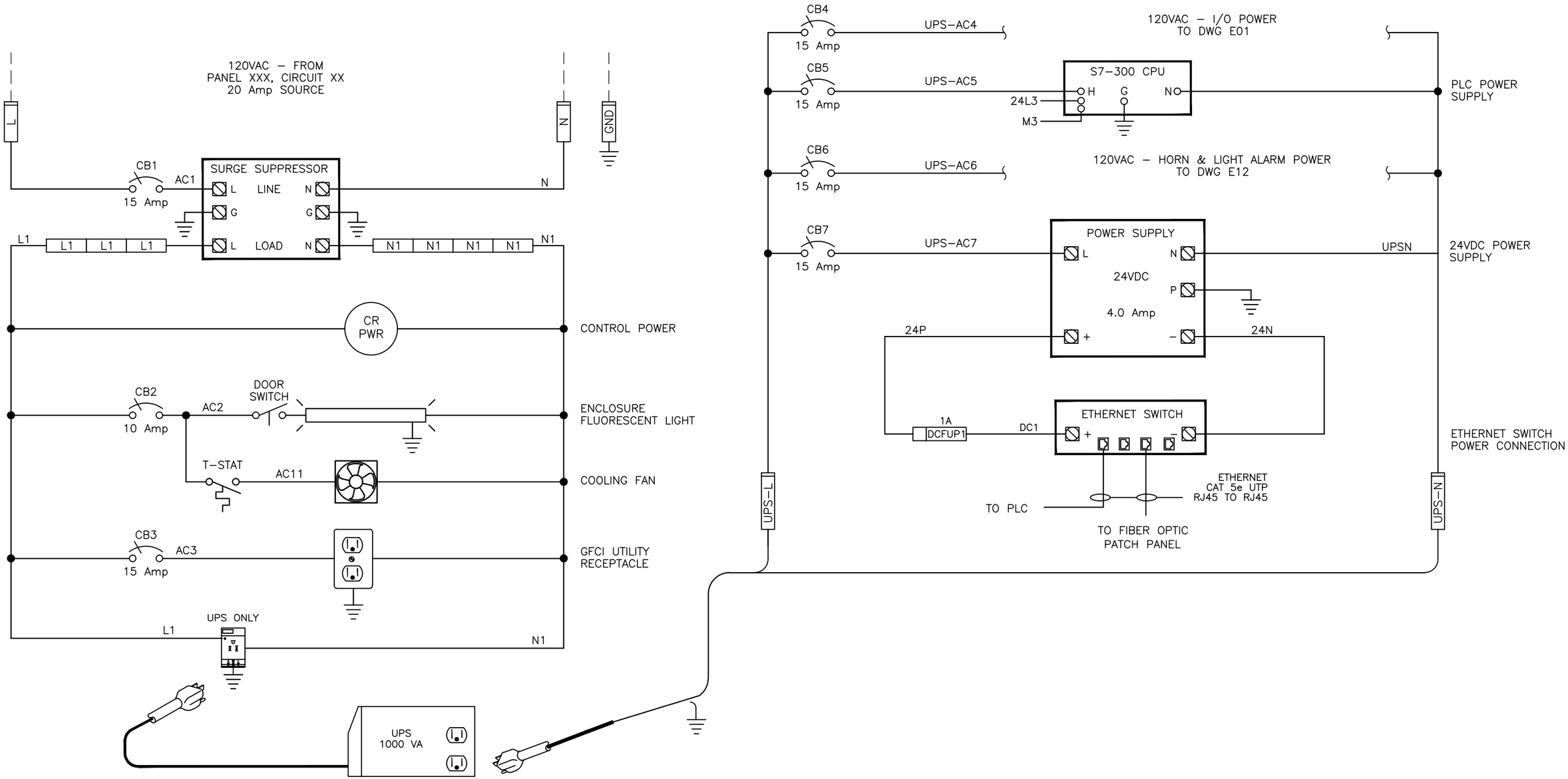

REUSE OF DOCUMENTS: This document, and the information incorporated herein, as an instrument of professional service, is the property of Technical Systems, Inc. and is not to be used, in whole or in part, for any other project without the written authorization of Technical Systems, Inc.

DWG: TITLEBLK.DWG; REV 02/19/02

REV	DESCRIPTION/INIT	DATE
3	SHOP AS–BUILT/AZ	7/10/12

LISTING
- ☐ UL508 S/N _____
- ☐ ETL
- ☐ OTHER _____

TSI Technical Systems Inc.
2303 196TH ST. S.W.
LYNNWOOD, WA. 98036
(425) 775–5696

CUSTOMER: Magnum Electric

DESIGN / CHKD: TP/LS

DRAWN:

WENATCHEE WWTP IMPROVEMENTS

SRCP–12000 SCREENING CONTROL PANEL
PANEL SRCP
POWER DISTRIBUTION

DATE: 1/5/12

JOB NO.: 7374

DWG. NO.: P01

REV.: 3

REUSE OF DOCUMENTS: This document, and the information incorporated herein, as an instrument of professional service, is the property of Technical Systems, Inc. and is not to be used, in whole or in part, for any other project without the written authorization of Technical Systems, Inc.

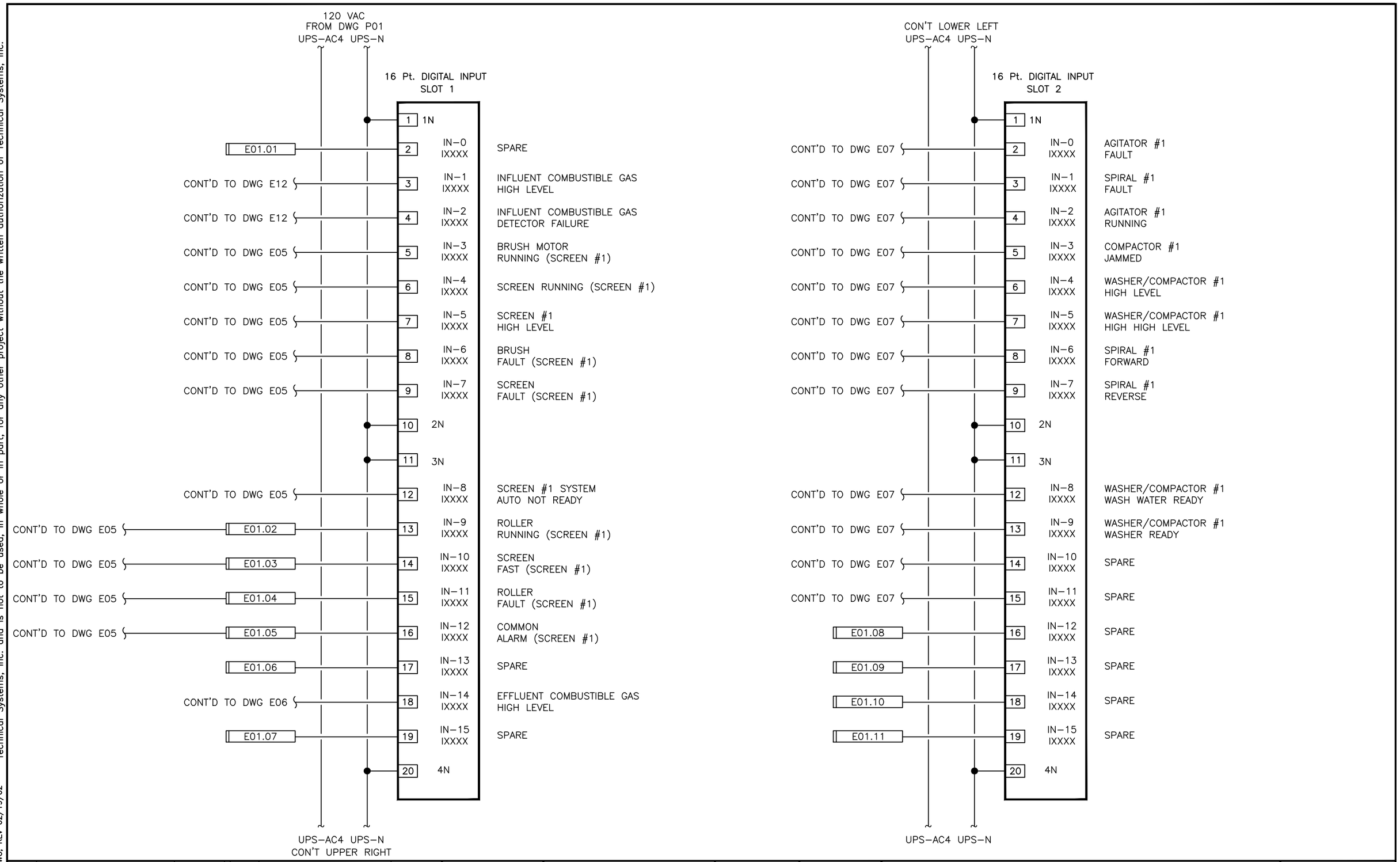

REV	DESCRIPTION/INIT	DATE
3	SHOP AS–BUILT/AZ	7/10/12

LISTING
- ☐ UL508 S/N ____
- ☐ ETL
- ☐ OTHER ____

Technical Systems Inc.
2303 196TH ST. S.W.
LYNNWOOD, WA. 98036
(425) 775–5696

CUSTOMER: Magnum Electric
DESIGN / CHKD: TP/LS
DRAWN:

WENATCHEE WWTP IMPROVEMENTS

SRCP–12000 SCREENING CONTROL PANEL
DISCRETE INPUTS OVERVIEW
WIRING DIAGRAM

DATE: 1/5/12
JOB NO.: 7374
DWG. NO.: E01
REV.: 3

DWG: TITLEBLK.DWG; REV 02/19/02

REUSE OF DOCUMENTS: This document, and the information incorporated herein, as an instrument of professional service, is the property of Technical Systems, Inc. and is not to be used, in whole or in part, for any other project without the written authorization of Technical Systems, Inc.

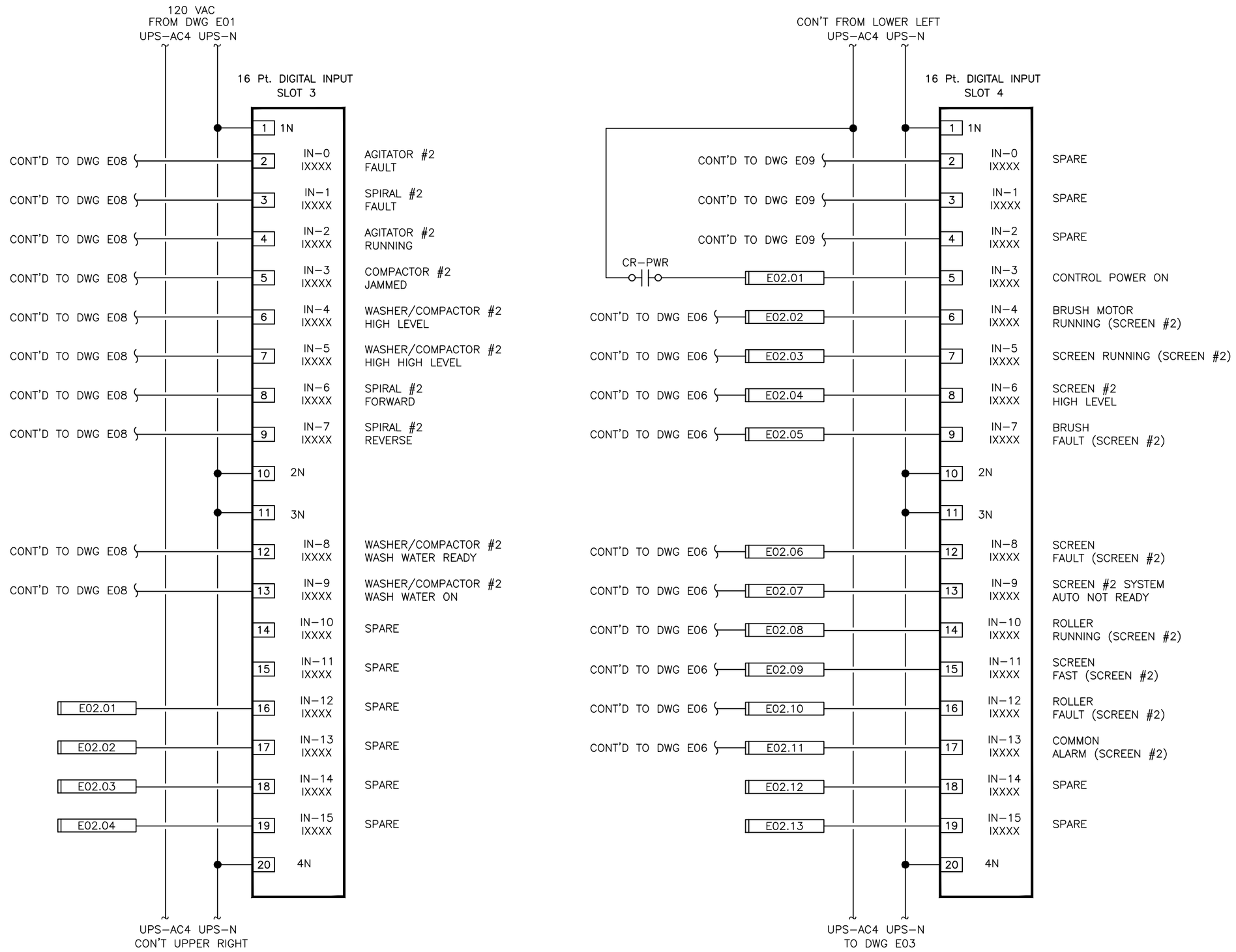

REV	DESCRIPTION/INIT	DATE
3	SHOP AS–BUILT/AZ	7/10/12

LISTING
- ☐ UL508 S/N _____
- ☐ ETL
- ☐ OTHER _____

Technical Systems Inc.
2303 196TH ST. S.W.
LYNNWOOD, WA. 98036
(425) 775–5696

CUSTOMER: Magnum Electric

DESIGN / CHKD: tp/ls

DRAWN

WENATCHEE WWTP IMPROVEMENTS

SRCP–12000 SCREENING CONTROL PANEL
DISCRETE INPUTS OVERVIEW
WIRING DIAGRAM

DATE: 1/5/12

JOB NO.: 7374

DWG. NO.: E02

REV.: 3

DWG: TITLEBLK.DWG; REV 02/19/02

REUSE OF DOCUMENTS: This document, and the information incorporated herein, as an instrument of professional service, is the property of Technical Systems, Inc. and is not to be used, in whole or in part, for any other project without the written authorization of Technical Systems, Inc.

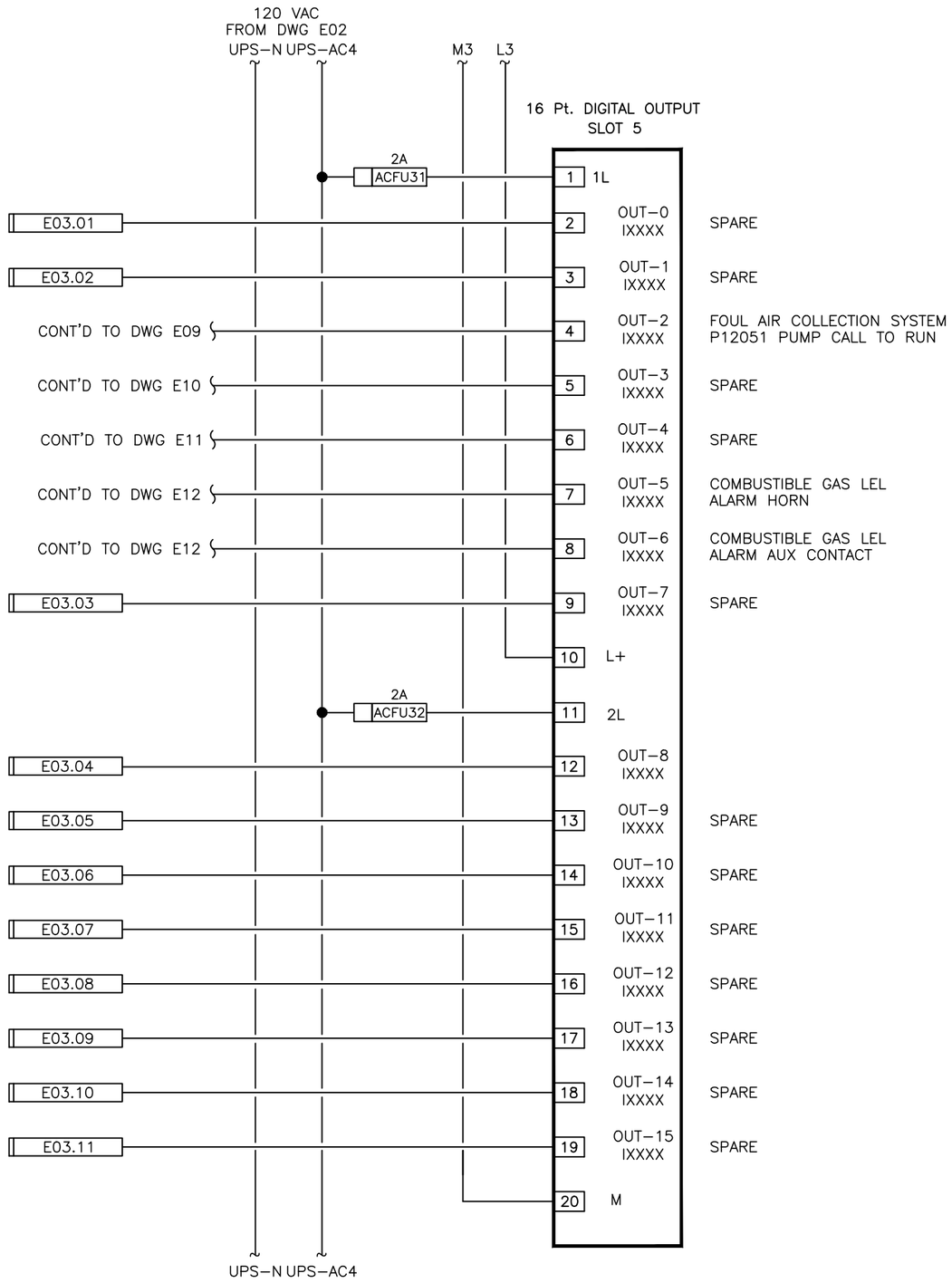

REV	DESCRIPTION/INIT	DATE
3	SHOP AS–BUILT/AZ	7/10/12

LISTING
- ☐ UL508 S/N _____
- ☐ ETL
- ☐ OTHER _____

Technical Systems Inc.
2303 196TH ST. S.W.
LYNNWOOD, WA. 98036
(425) 775–5696

CUSTOMER: Magnum Electric

DESIGN / CHKD: TP/LS

DRAWN

WENATCHEE WWTP IMPROVEMENTS

SRCP–12000 SCREENING CONTROL PANEL
DISCRETE OUTPUTS OVERVIEW
WIRING DIAGRAM

DATE: 1/5/12

JOB NO.: 7374

DWG. NO.: E03

REV.: 3

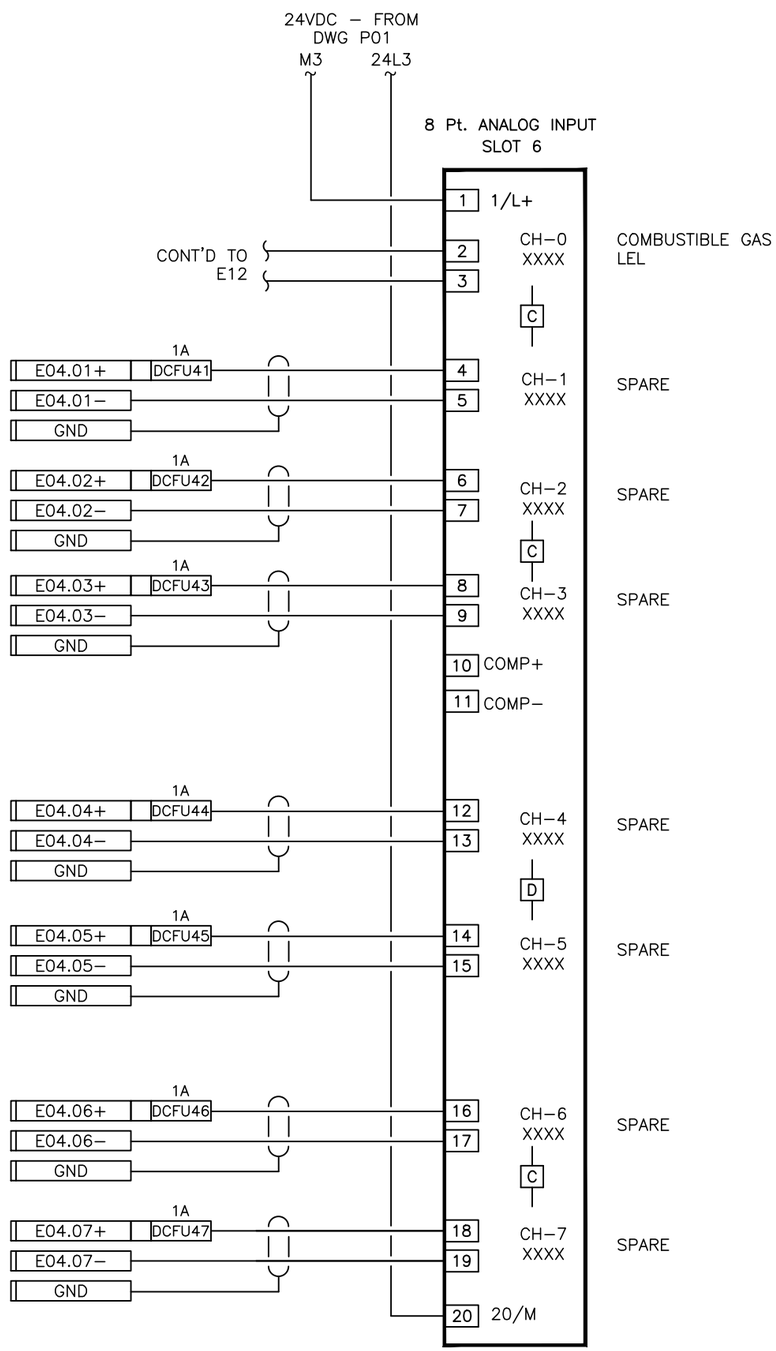

NOTES:

C = 4 WIRE CURRENT INPUT JUMPER SETTING

D = 2 WIRE CURRENT INPUT JUMPER SETTING

JUMPERS ARE LOCATED ON SIDE OF MODULE

REUSE OF DOCUMENTS: This document, and the information incorporated herein, as an instrument of professional service, is the property of Technical Systems, Inc. and is not to be used, in whole or in part, for any other project without the written authorization of Technical Systems, Inc.

DWG: TITLEBLK.DWG; REV 02/19/02

REV	DESCRIPTION/INIT	DATE
3	SHOP AS–BUILT/AZ	7/10/12

LISTING
- ☐ UL508 S/N _____
- ☐ ETL
- ☐ OTHER _____

Technical Systems Inc.
2303 196TH ST. S.W.
LYNNWOOD, WA. 98036
(425) 775–5696

CUSTOMER: Magnum Electric

DESIGN / CHKD: TP/LS

DRAWN

WENATCHEE WWTP IMPROVEMENTS

SRCP–12000 SCREENING CONTROL PANEL
ANALOG INPUTS OVERVIEW
WIRING DIAGRAM

DATE: 1/5/12

JOB NO.: 7374

DWG. NO.: E04

REV.: 3

REUSE OF DOCUMENTS: This document, and the information incorporated herein, as an instrument of professional service, is the property of Technical Systems, Inc. and is not to be used, in whole or in part, for any other project without the written authorization of Technical Systems, Inc.

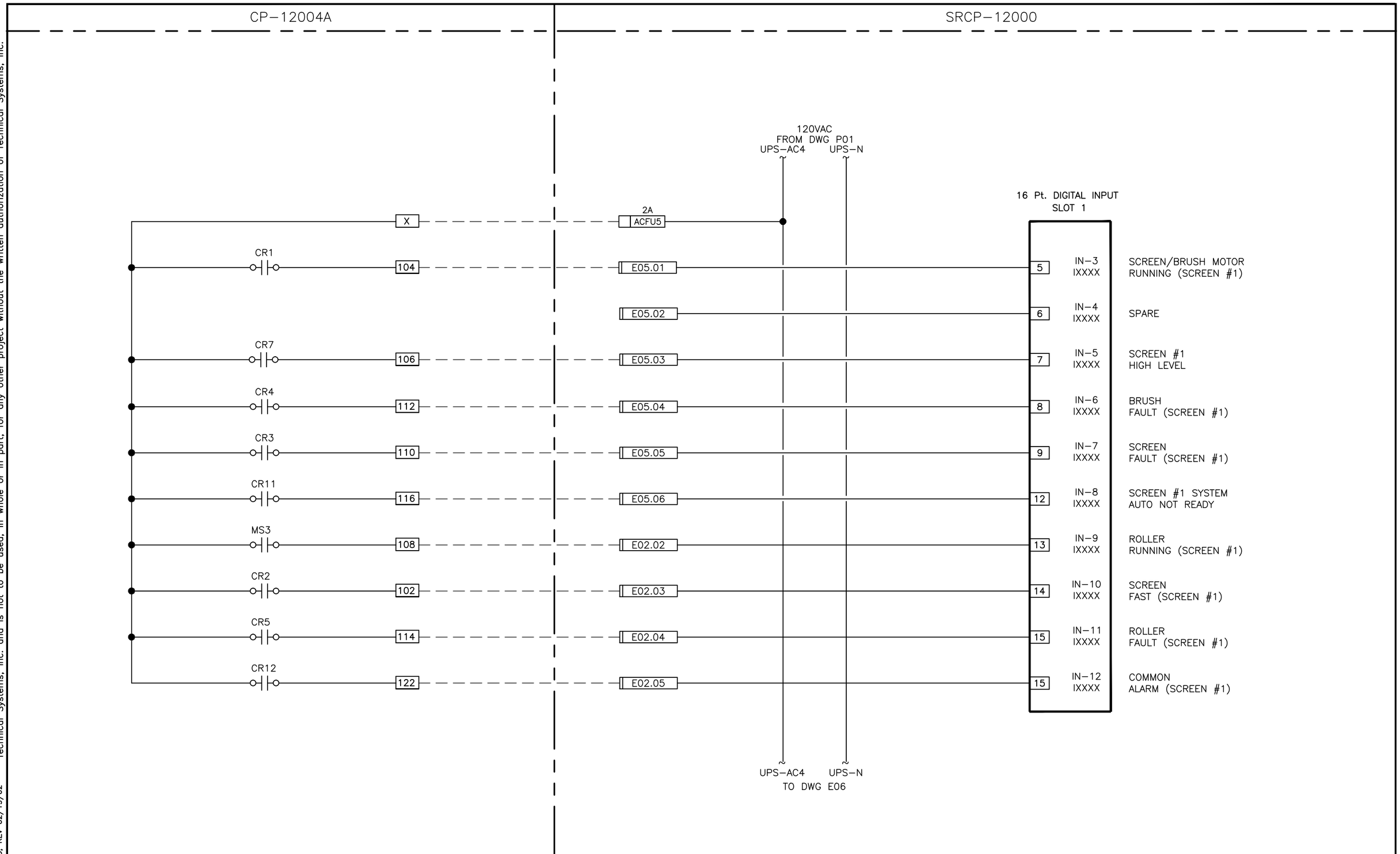

REV	DESCRIPTION/INIT	DATE
3	SHOP AS-BUILT/AZ	7/10/12

LISTING
- UL508 S/N
- ETL
- OTHER

Technical Systems Inc.
2303 196TH ST. S.W.
LYNNWOOD, WA. 98036
(425) 775-5696

CUSTOMER: Magnum Electric

DESIGN / CHKD: TP/LS

DRAWN:

WENATCHEE WWTP IMPROVEMENTS

SRCP-12000 SCREENING CONTROL PANEL
INFLUENT SCREEN #1 CP-12004A
CONTROL LOOP 100 WIRING DIAGRAM

DATE: 1/5/12
JOB NO.: 7374
DWG. NO.: E05
REV.: 3

DWG: TITLEBLK.DWG; REV 02/19/02

REUSE OF DOCUMENTS: This document, and the information incorporated herein, as an instrument of professional service, is the property of Technical Systems, Inc. and is not to be used, in whole or in part, for any other project without the written authorization of Technical Systems, Inc.

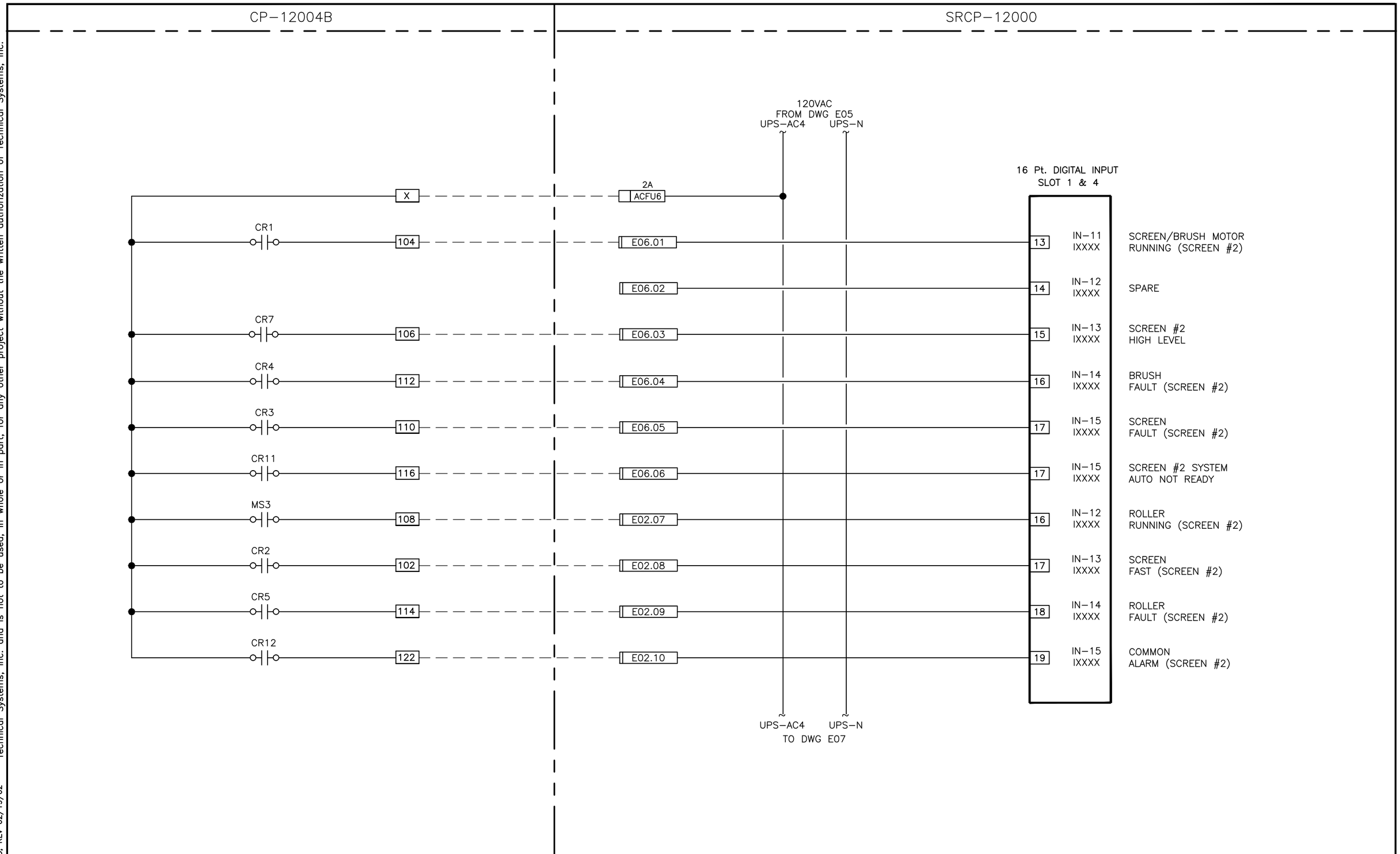

REV	DESCRIPTION/INIT	DATE
3	SHOP AS-BUILT/AZ	7/10/12

LISTING
- ☐ UL508 S/N _____
- ☐ ETL
- ☐ OTHER _____

Technical Systems Inc.
2303 196TH ST. S.W.
LYNNWOOD, WA. 98036
(425) 775-5696

CUSTOMER: Magnum Electric

DESIGN / CHKD: TP/LS

DRAWN:

WENATCHEE WWTP IMPROVEMENTS

SRCP-12000 SCREENING CONTROL PANEL
INFLUENT SCREEN #2 CP-12004B
CONTROL LOOP 100 WIRING DIAGRAM

DATE: 1/5/12
JOB NO.: 7374
DWG. NO.: E06
REV.: 3

DWG: TITLEBLK.DWG; REV 02/19/02

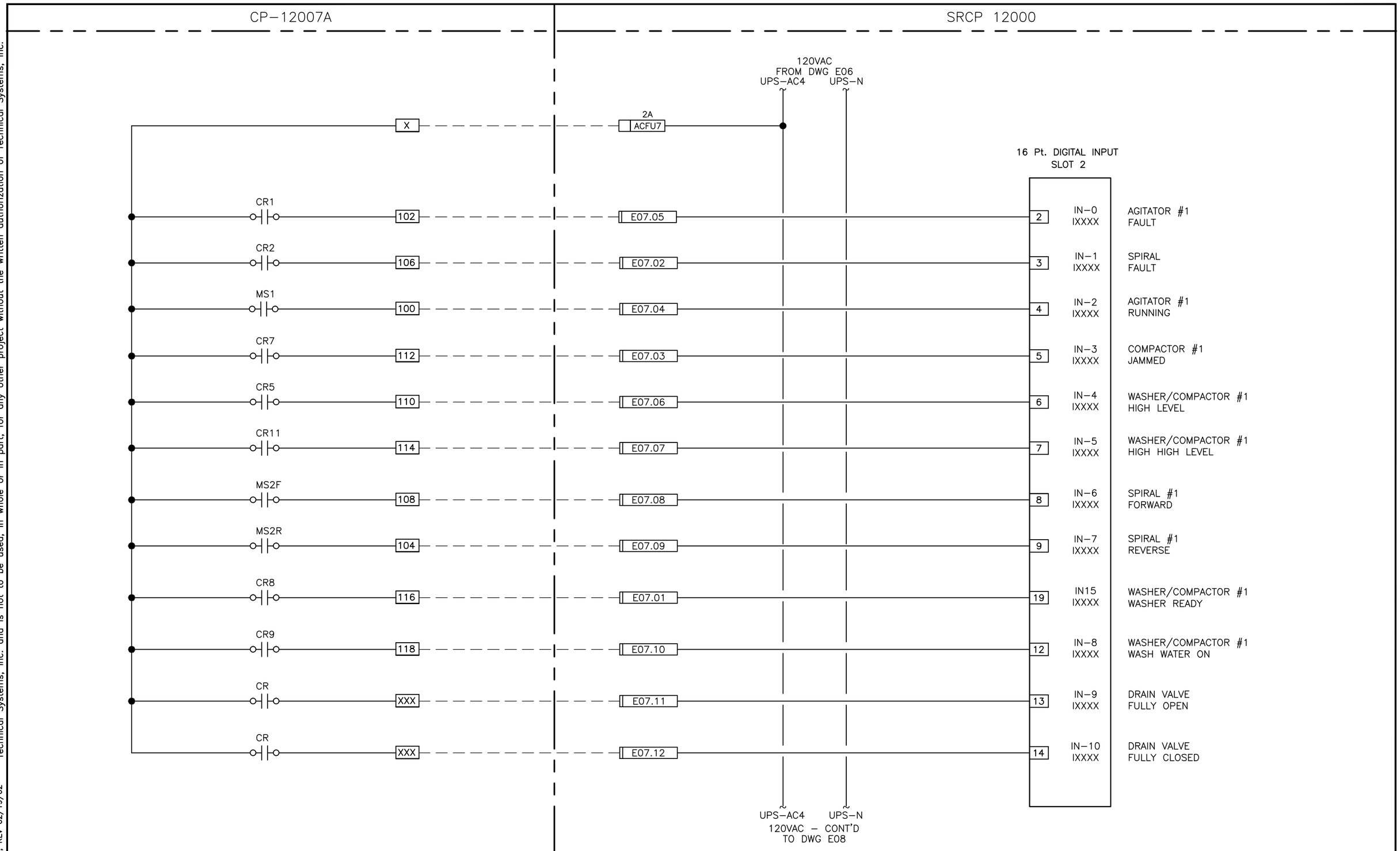

REUSE OF DOCUMENTS: This document, and the information incorporated herein, as an instrument of professional service, is the property of Technical Systems, Inc. and is not to be used, in whole or in part, for any other project without the written authorization of Technical Systems, Inc.

REV	DESCRIPTION/INIT	DATE
3	SHOP AS-BUILT/AZ	7/10/12

LISTING
- UL508 S/N _____
- ETL
- OTHER _____

Technical Systems Inc.
2303 196TH ST. S.W.
LYNNWOOD, WA. 98036
(425) 775-5696

CUSTOMER: Magnum Electric
DESIGN / CHKD: TP/LS
DRAWN:

WENATCHEE WWTP IMPROVEMENTS

SRCP-12000 SCREENING CONTROL PANEL
WASHER/COMPACTOR #1 CP-12007A
CONTROL LOOP 101 WIRING DIAGRAM

DATE: 1/5/12
JOB NO.: 7374
DWG. NO.: E07
REV.: 3

DWG: TITLEBLK.DWG; REV 02/19/02

REUSE OF DOCUMENTS: This document, and the information incorporated herein, as an instrument of professional service, is the property of Technical Systems, Inc. and is not to be used, in whole or in part, for any other project without the written authorization of Technical Systems, Inc.

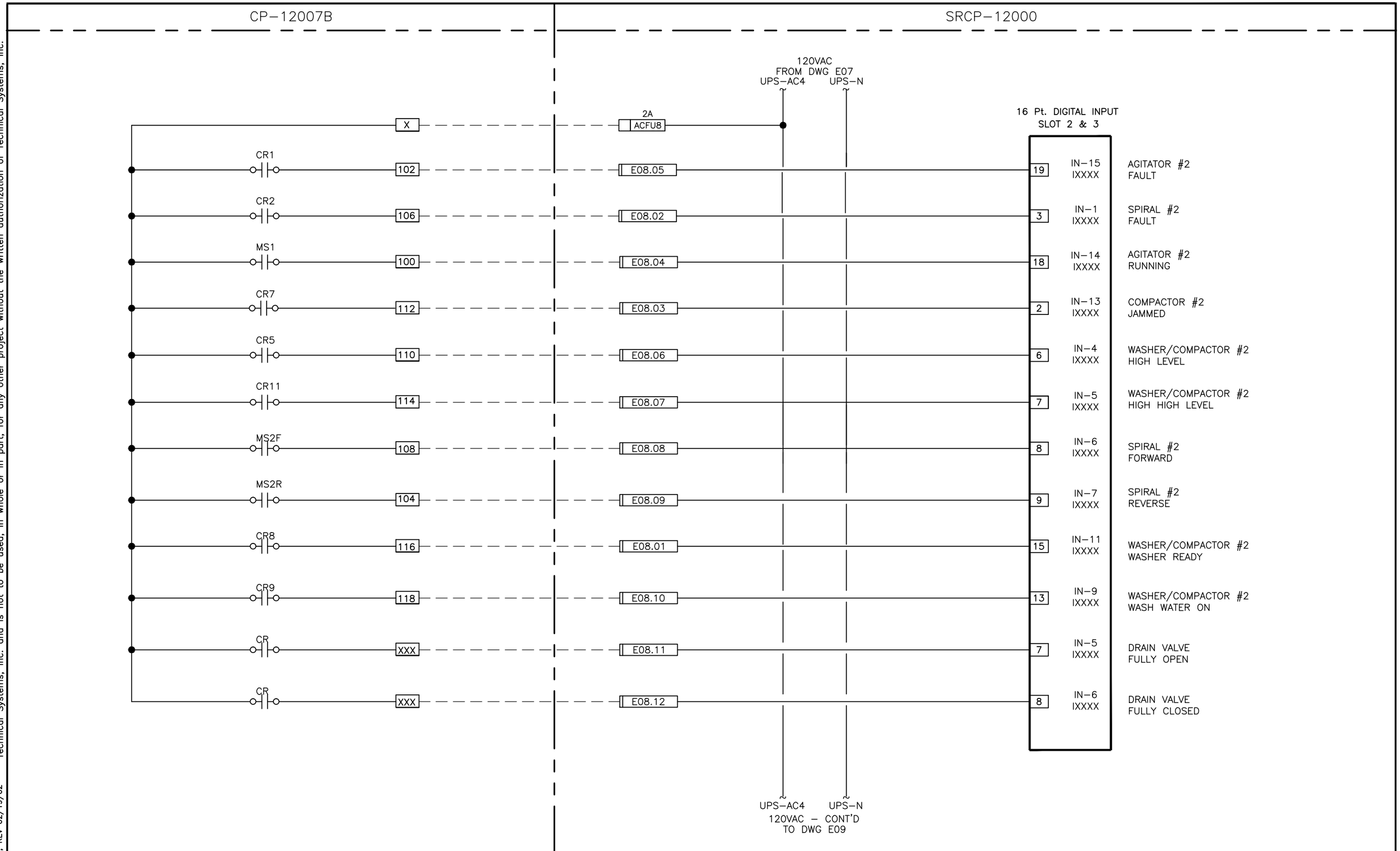

REV	DESCRIPTION/INIT	DATE
3	SHOP AS-BUILT/AZ	7/10/12

LISTING
- ☐ UL508 S/N ____
- ☐ ETL
- ☐ OTHER ____

Technical Systems Inc.
2303 196TH ST. S.W.
LYNNWOOD, WA. 98036
(425) 775-5696

CUSTOMER: Magnum Electric

DESIGN / CHKD: TP/LS

DRAWN:

WENATCHEE WWTP IMPROVEMENTS

SRCP-12000 SCREENING CONTROL PANEL
WASHER/COMPACTOR #2 CP-12007B
CONTROL LOOP 101 WIRING DIAGRAM

DATE: 1/5/12
JOB NO.: 7374
DWG. NO.: E08
REV.: 3

DWG: TITLEBLK.DWG; REV 02/19/02

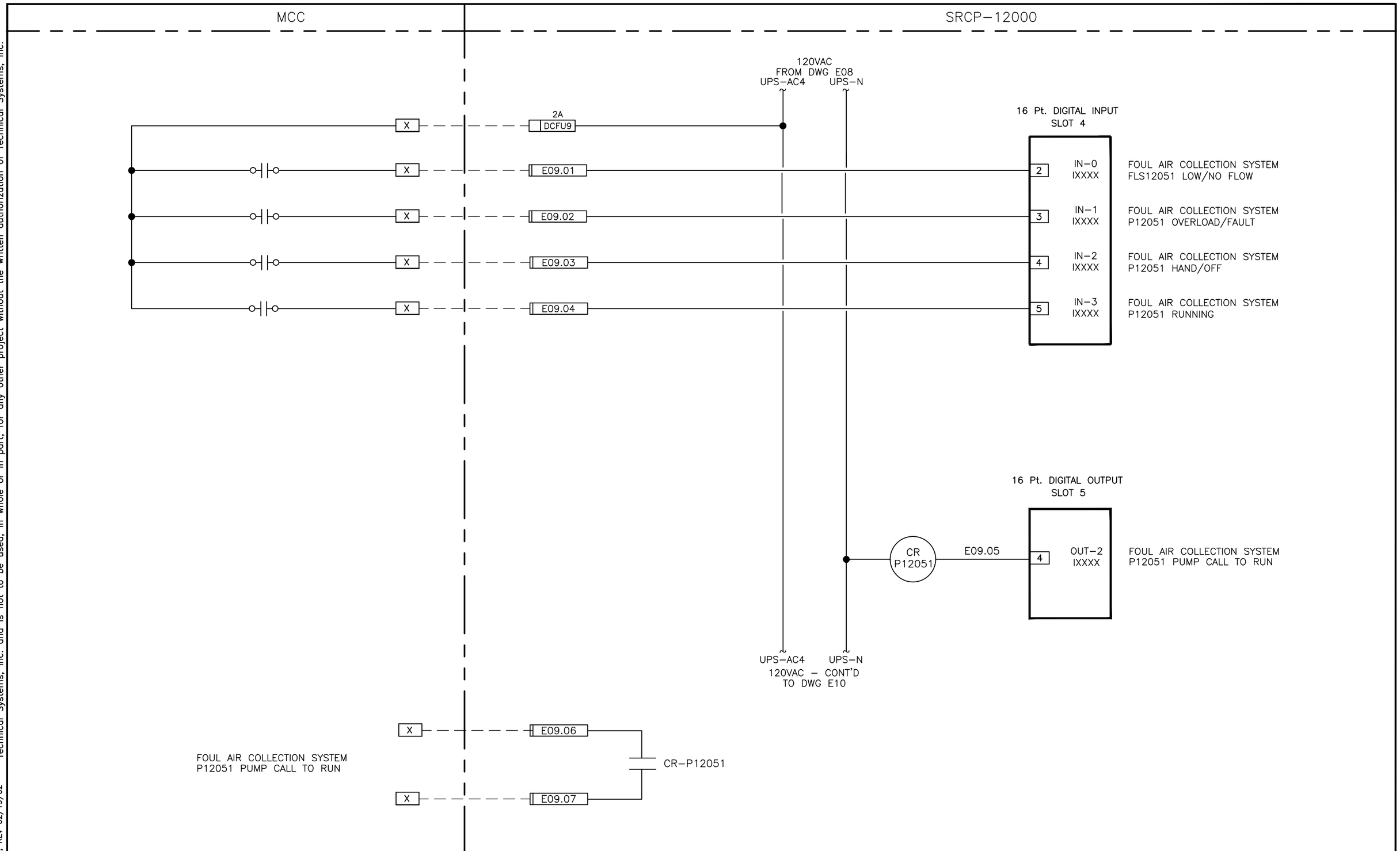

REUSE OF DOCUMENTS: This document, and the information incorporated herein, as an instrument of professional service, is the property of Technical Systems, Inc. and is not to be used, in whole or in part, for any other project without the written authorization of Technical Systems, Inc.

DWG: TITLEBLK.DWG; REV 02/19/02

REV	DESCRIPTION/INIT	DATE
3	SHOP AS-BUILT/AZ	7/10/12

LISTING
- UL508 S/N _____
- ETL
- OTHER _____

Technical Systems Inc.
2303 196TH ST. S.W.
LYNNWOOD, WA. 98036
(425) 775-5696

CUSTOMER: Magnum Electric
DESIGN / CHKD: TP/LS
DRAWN:

WENATCHEE WWTP IMPROVEMENTS

SRCP-12000 SCREENING CONTROL PANEL
FOUL AIR COLLECTION SYSTEM PUMP P12051
CONTROL LOOP 103 WIRING DIAGRAM

DATE: 1/5/12
JOB NO.: 7374
DWG. NO.: E09
REV.: 3

REUSE OF DOCUMENTS: This document, and the information incorporated herein, as an instrument of professional service, is the property of Technical Systems, Inc. and is not to be used, in whole or in part, for any other project without the written authorization of Technical Systems, Inc.

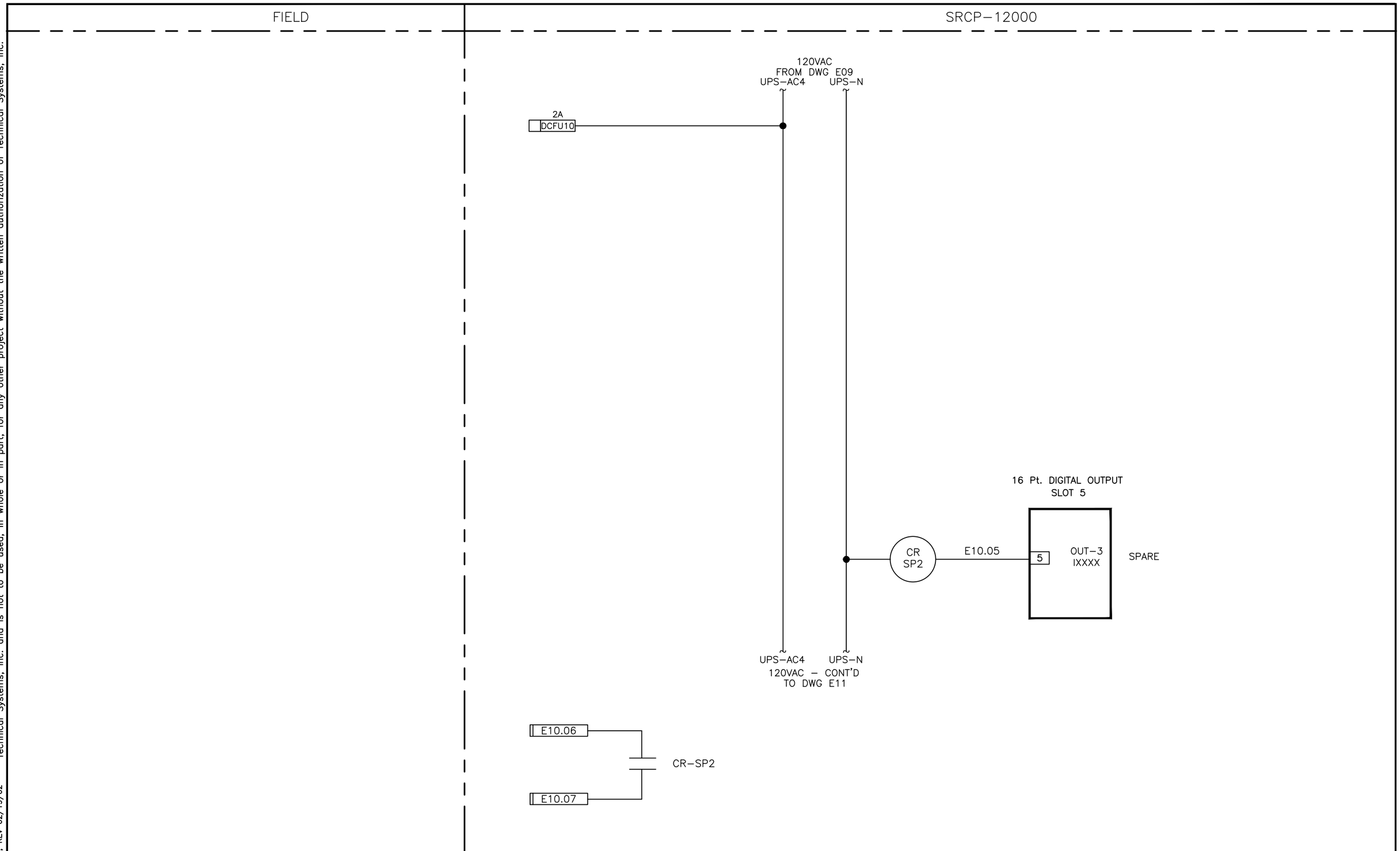

REV	DESCRIPTION/INIT	DATE
3	SHOP AS–BUILT/AZ	7/10/12

LISTING
- ☐ UL508 S/N _____
- ☐ ETL
- ☐ OTHER _____

Technical Systems Inc.
2303 196TH ST. S.W.
LYNNWOOD, WA. 98036
(425) 775–5696

CUSTOMER: Magnum Electric

DESIGN / CHKD: TP/LS

DRAWN

WENATCHEE WWTP IMPROVEMENTS

SRCP–12000 SCREENING CONTROL PANEL
FOUL AIR COLLECTION SYSTEM PUMP P31031A
CONTROL LOOP 103 WIRING DIAGRAM

DATE: 1/5/12
JOB NO.: 7374
DWG. NO.: E10
REV.: 3

DWG: TITLEBLK.DWG; REV 02/19/02

REUSE OF DOCUMENTS: This document, and the information incorporated herein, as an instrument of professional service, is the property of Technical Systems, Inc. and is not to be used, in whole or in part, for any other project without the written authorization of Technical Systems, Inc.

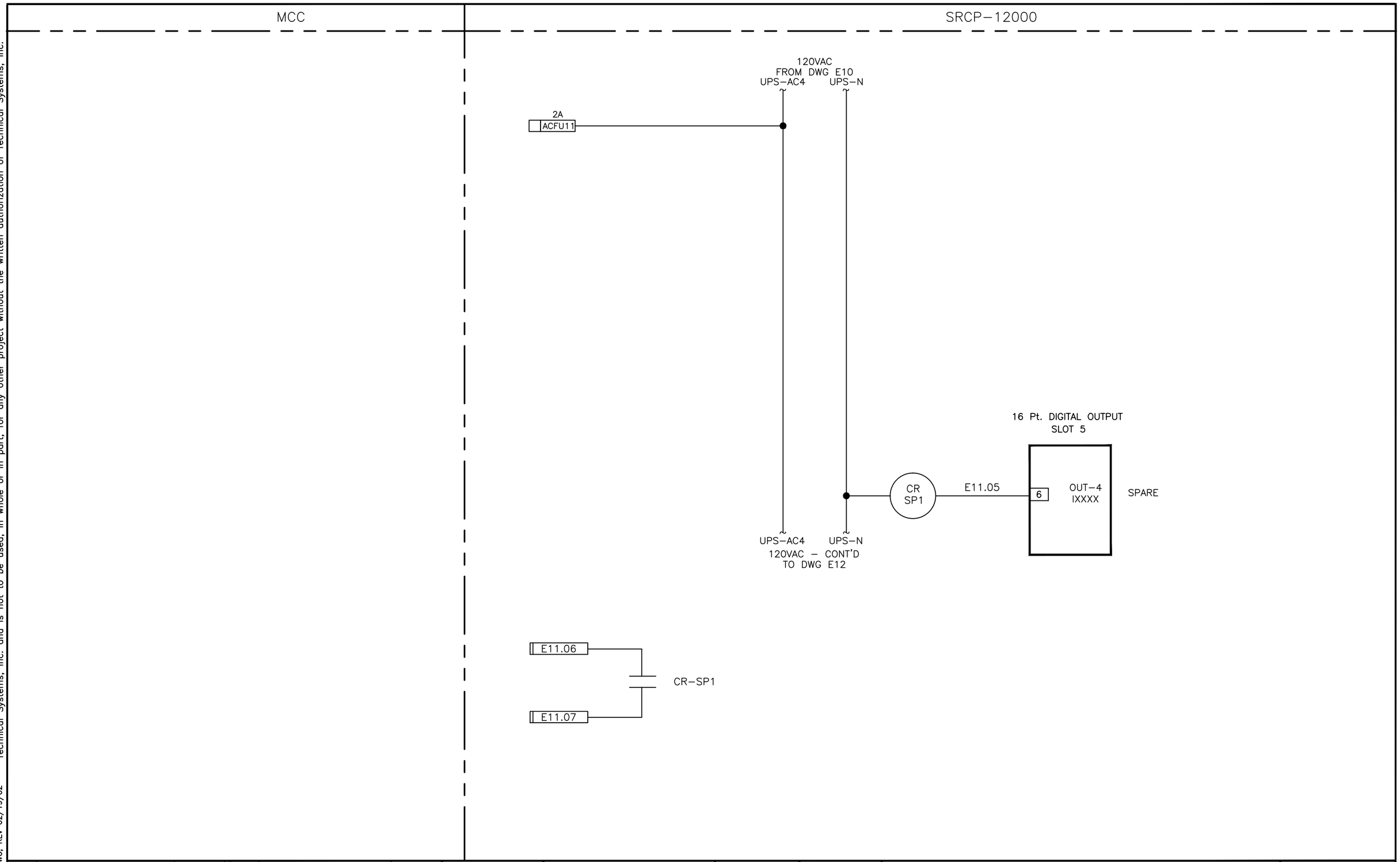

REV	DESCRIPTION/INIT	DATE
3	SHOP AS–BUILT/AZ	7/10/12

LISTING
- ☐ UL508 S/N _____
- ☐ ETL
- ☐ OTHER _____

Technical Systems Inc.
2303 196TH ST. S.W.
LYNNWOOD, WA. 98036
(425) 775–5696

CUSTOMER: Magnum Electric

DESIGN / CHKD: TP/LS

DRAWN

WENATCHEE WWTP IMPROVEMENTS

SRCP–12000 SCREENING CONTROL PANEL
FOUL AIR COLLECTION SYSTEM PUMP P31031B
CONTROL LOOP 103 WIRING DIAGRAM

DATE: 1/5/12
JOB NO.: 7374
DWG. NO.: E11
REV.: 3

DWG: TITLEBLK.DWG; REV 02/19/02

DRAWING LIST

SRCP-12000 CONTROL PANEL

SHEET #	DESCRIPTION
J01	PLC Panel - Panel Layout
P01	PLC SRCP - Power Distribution
E01	Discrete Inputs Overview - Wiring Diagram
E02	Discrete Inputs Overview - Wiring Diagram
E03	Discrete Outputs Overview - Wiring Diagram
E04	Analog Inputs Overview - Wiring Diagram
E05	Influent Screen #1 CP-12004A - Control Loop 100 Wiring Diagram
E06	Influent Screen #2 CP-12004B - Control Loop 100 Wiring Diagram
E07	Washer/Compactor #1 CP-12007A - Control Loop 101 Wiring Diagram
E08	Washer/Compactor #2 CP-12007B - Control Loop 101 Wiring Diagram
E09	Foul Air Collection System Pump P12051 - Control Loop 103 Wiring Diagram
E10	Foul Air Collection System Pump P31031A - Control Loop 103 Wiring Diagram
E11	Foul Air Collection System Pump P31031B - Control Loop 103 Wiring Diagram
E12	Combustible Gas Detection AE12004 - Control Loop 105 Wiring Diagram

REUSE OF DOCUMENTS: This document, and the information incorporated herein, as an instrument of professional service, is the property of Technical Systems, Inc. and is not to be used, in whole or in part, for any other project without the written authorization of Technical Systems, Inc.

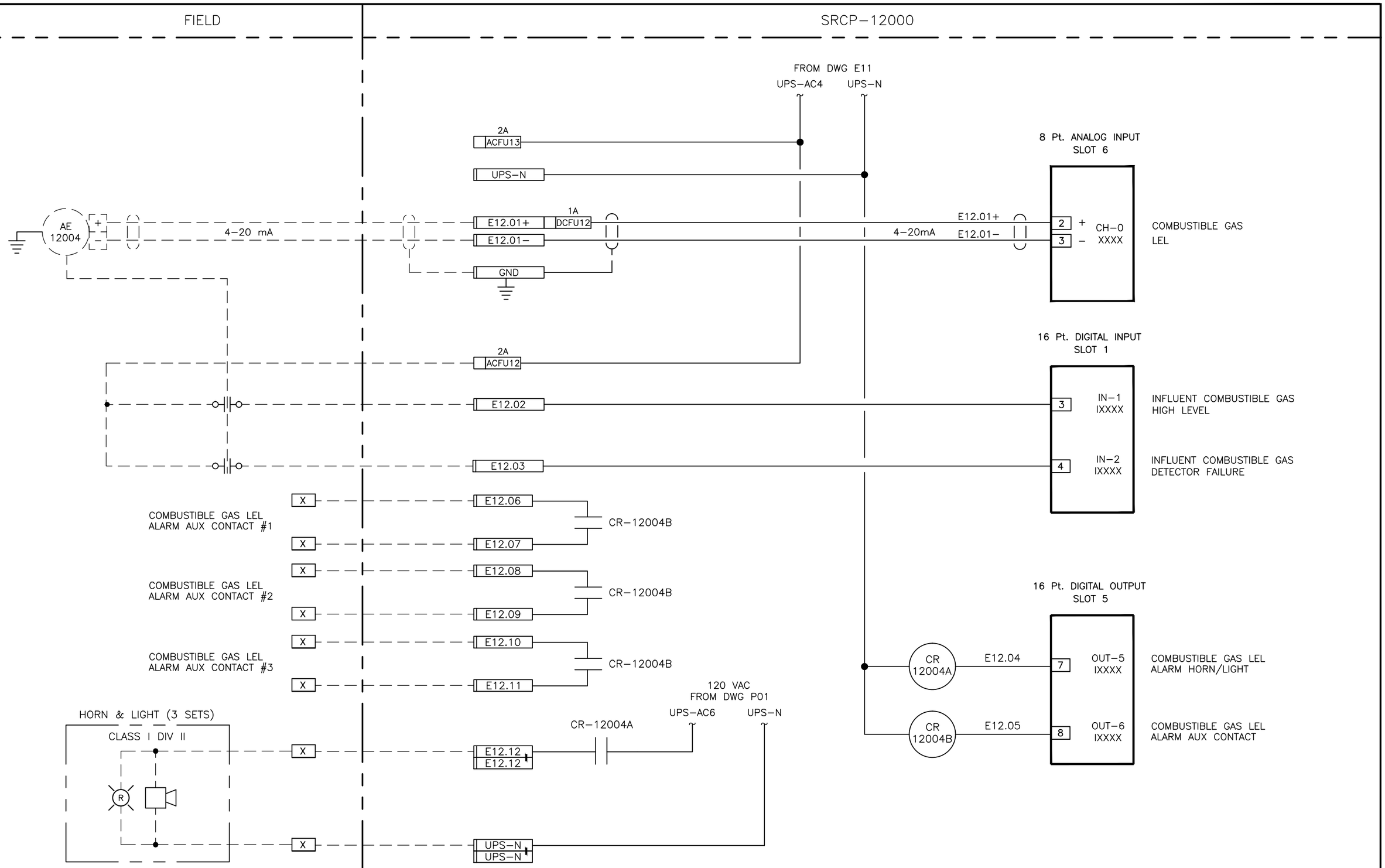

REV	DESCRIPTION/INIT	DATE
3	SHOP AS–BUILT/AZ	7/10/12

LISTING
- UL508 S/N
- ETL
- OTHER

Technical Systems Inc.
2303 196TH ST. S.W.
LYNNWOOD, WA. 98036
(425) 775–5696

CUSTOMER: CH2M HILL

DESIGN / CHKD: TP/LS

DRAWN

WENATCHEE WWTP IMPROVEMENTS

SRCP – 12000 CONTROL PANEL
COMBUSTIBLE GAS DETECTION AE12004
CONTROL LOOP 105 WIRING DIAGRAM

DATE: 1/5/12
JOB NO.: 7374
DWG. NO.: E12
REV.: 3

DWG: TITLEBLK.DWG; REV 02/19/02