FAN SUBMITTAL

for

FL-18 Fan

Specifically Prepared For:
FLUID SYSTEMS, INC.

for

P. O. No.: RR13-2628

Verantis Corporation S. O. No.: 4093

August 2013

7251 Engle Road, Sui te 300 | Plaza South One | Middleburg Heights, Ohio 44130
+1 (440) 243-0700 **tel** | +1 (440) 243-9854 **fax** | +1 (800) 554-8673 | info@verantis.com | *www.verantis.com*

VERANTIS
Environmental Solutions Group

FAN SUBMITTAL

Date: 8/27/2013

Customer:	Fluid Systems, Inc.
Job Location:	Wenatchee, WA
PO Number:	RR13-2628
Verantis Corporation Order No.:	4093
Fan Model No.:	(1) FL-18 Fan
Fan Equipment No.:	N/A

Scope of supply:

1. Supply one new booster fan.

INDEX

1 General Information

1.1 Data for Model FL-18 & Fan Curve @ Operating RPM

2 Technical Information

2.1 Base Coating, Heresite TB-VR-500 Series

3 Component Manufacturers Information

3.1 Fan Motor Data
3.1.1 TECO Premium Efficiency Explosion Proof Product Description
3.1.2 Motor Performance Data & Dimensions
3.2 Motor Disconnect Switch
3.2.1 Explosion Proof Control Enclosures
3.2.2 ABB Non-Fusible Disconnect Switches

4 Verantis Corporation Drawings

Drawing	Rev	Description
4093-001		FL-18 Fan, Axial
FAN STD F-1	2	Fan Inlet & Transition Outlet Flanges (PS 15-69)

7251 Engle Road, Sui te 300 | Plaza South One | Middleburg Heights, Ohio 44130
+1 (440) 243-0700 **tel** | +1 (440) 243-9854 **fax** | +1 (800) 554-8673 | info@verantis.com | *www.verantis.com*

Section 1 – General Information

Data for Model: FL-18
Reference Number: F-51005

Standard Conditions	
Volume Flow Rate (CFM)	4500
Static Pressure (In. WC)	2.06
Temperature (°F)	68.00
Density (lb/ft3)	0.0750
Elevation (ft)	0.00
Power (BHP)	2.79
Static Efficiency (%)	52.46
Outlet Velocity (FPM)	2546.69
Tip Speed (FPM)	13135.51
Class	2
Max RPM	3183

Operating Conditions	
Volume Flow Rate (CFM)	4500
Static Pressure (In. WC)	2.00
Temperature (°F)	70.00
Density (lb/ft3)	0.0729
Elevation (ft)	780.00
Power (BHP)	2.71
RPM	2788
Static Efficiency (%)	52.46

	Sound Power Levels							
Octave Band	1	2	3	4	5	6	7	8
OB Center Freq.	63	125	250	500	1000	2000	4000	8000
AMCA Lw	72	91	94	92	88	85	76	69
LwA Octave Ban	51	78	86	92	91	89	79	69
	Weighted LwA: 100 dBA							

Estimated Sound Pressure at 3.00 ft	
Ducted Inlet and Ducted Outlet	76.0 dBA
Roof Mounted Fan	93.0 dBA

The table represents sound power levels of the selected Verantis fan. Sound power is neither environment dependent nor distance dependent. Sound power belongs strictly to the sound source. Sound pressure is the perceived sound level at a certain distance from the fan within a certain environment.
The sound power levels shown in the table are estimates based on Verantis test data. Verantis sound tests are conducted in accordance with AMCA Standards 300 (Reverberant Room Method for Sound testing of Fans) and 301 (Generalized Sound Format).

Reference Number: F-51005

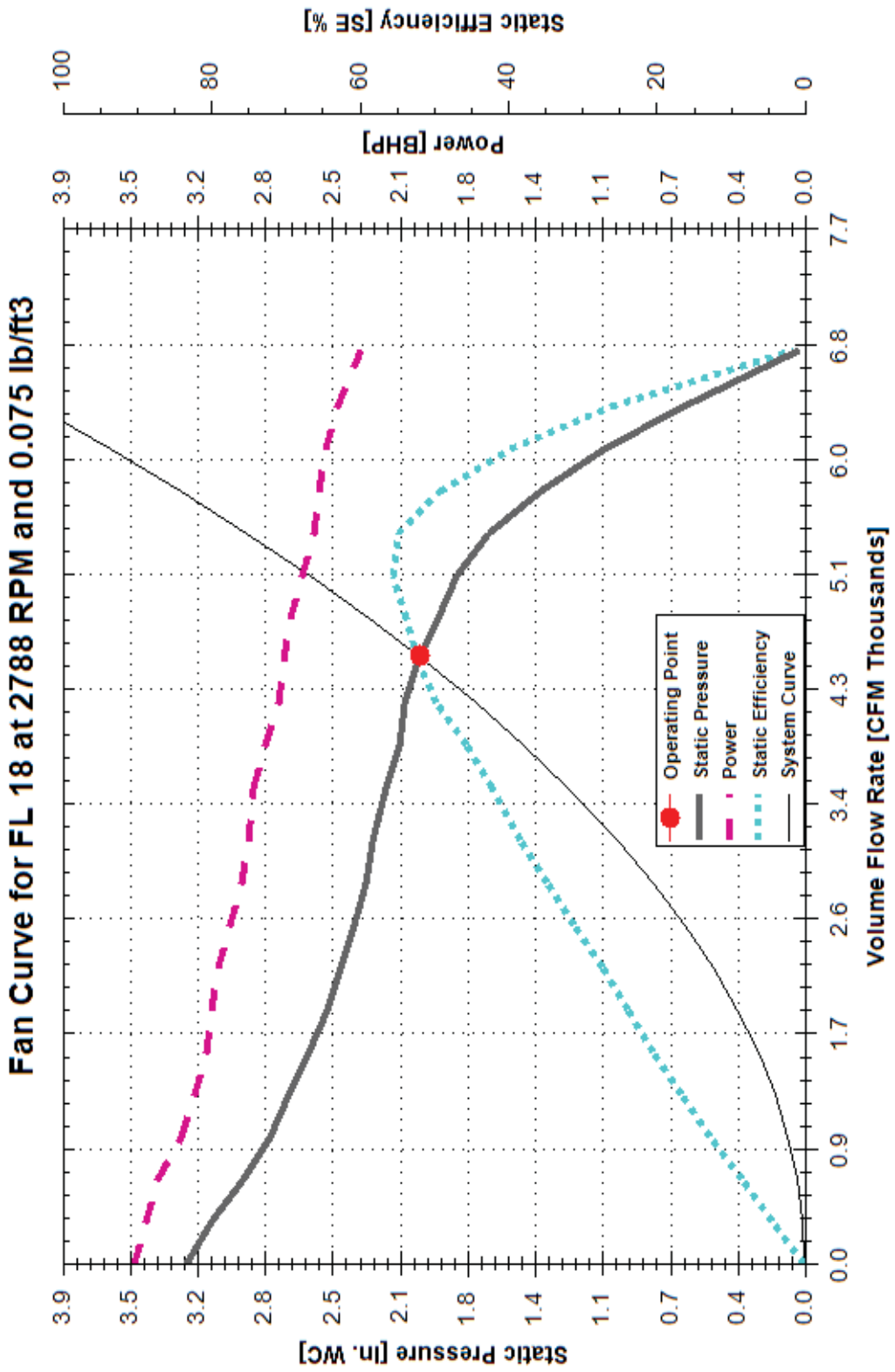

Section 2 – Technical Information

TECHNICAL BULLETIN
VR-500
January 2009
VR-500 Series Air Dry Phenolic Coatings

GENERIC TYPE: Air drying phenolic.

RECOMMENDED USAGE: HERESITE VR-500 air dry phenolic series coatings are specially formulated to permit application by brush, spray or roller. Some of their outstanding properties are: excellent durability, good adhesion, good film building characteristics and flexibility.

When thoroughly aged, they produce hard corrosion resistant films. Recommended as a heavy duty maintenance coating for exposures to splash, spillage and fumes.

Successful applications include: agricultural implements, chemical plants, canning factories, construction equipment, marine finishes, steel plants, sewage disposal plant, textile industry, underground and underwater service, and ventilating systems. The VR-514 brown coating is a primer-finish combination material, specially formulated for salt water service.
When finished product is going to be exposed to UV rays, one topcoat of Heresite UC-5500 polyurethane is recommended. Allow the VR-500 to dry 24-48 hours before applying the UC-5500 coating

CHEMICAL RESISTANCE GUIDE:

EXPOSURE	SPLASH & SPILLAGE	FUMES
Acids (dilute)	Good	Excellent
Alkalies (dilute)	Good	Good
Solvents	Fair	Good
Inorganic Salts	Good	Excellent
Water	Good	Excellent

ORDERING INFORMATION:

Shipping Weight:

VR-500 Finish	Avg. Wt. 9 lbs. /gal.
VR-500 Primer	Avg. Wt. 10 lbs. /gal.
(depends on color)	
S-240 Solvent	Approx. 6.5 lbs. /gal.

Flashpoint (T.C.C):

VR-500	101ºF (38ºC)
S-240 Solvent	101ºF (38ºC)
S-440 Solvent	62ºF (17ºC)

PHYSICAL DATA: (depends on color)

Solids by wt.	Approx. 59% (finish)
Solids by vol.	Approx. 46% (finish)
Solids by wt.	Approx. 67% (primer)
Solids by vol.	Approx. 48% (primer)

Pot life: N/A
Shelf life: 2 years @ 70ºF (21ºC)

VISCOSITY: (depends on color)
Finish: 56-96 K.U. (Krebs Units)
Primer: 88-98 K.U. (Krebs Units)

TEMPERATURE LIMITATION:
HERESITE VR-500 accepts dry heat temperatures up to 200ºF (93ºC)

COLORS
VR-500 Clear
VR-502 Black
VR-504 Brown
VR-506 Gray
VR-508 Ivory
VR-509 Machine Gray
(Other Colors Available On Special Order)

COVERAGE: Theoretical coverage - 737 sq. ft per gal. at 1 mil. Recommended total dry film thickness is 4 to 6 in a 2 to 3 coat system. (At 5 mils DFT average coverage would be 118 sq. ft. per gallon). This includes a 20% loss factor.

APPLICATION INSTRUCTIONS
These instructions are not intended to show product recommendations for specific service. They are issued as an aid in determining correct surface preparation, mixing instructions and application. It is assumed that the proper product recommendations have been made. These instructions should be followed closely to obtain the maximum service from the materials.
CAUTION: CONTAINS FLAMMABLE SOLVENTS. KEEP AWAY FROM SPARKS AND OPEN FLAMES. IN CONFINED AREAS WORKMEN MUST WEAR FRESH AIR LINE RESPIRATORS. HYPERSENSITIVE PERSONS SHOULD WEAR GLOVES OR USE PROTECTIVE CREAM. ALL ELECTRICAL EQUIPMENT AND INSTALLATIONS SHOULD BE MADE AND GROUNDED IN ACCORDANCE WITH THE NATIONAL ELECTRICAL CODE. IN AREAS WHERE EXPLOSION HAZARDS EXIST, WORKMEN SHOULD BE REQUIRED TO USE NONFERROUS TOOLS AND TO WEAR CONDUCTIVE AND NONSPARKING SHOES.

SURFACE PREPARATION: Remove all oil, grease from the surface with an appropriate solvent, such as Heresite S-330.

STEEL: (NON-IMMERSION) a commercial blast is acceptable in accordance with NACE #3 or SSPC-SP-6 specifications. Surface profile or anchor pattern shall be 20-25% of the recommended dry film thickness.

CONCRETE: (NON-IMMERSION) Remove protrusions by stoning, sanding or grinding. Concrete must be cured at least 28 days @ 70ºF (21ºC) and 50% humidity. Surfaces must be acid etched or abrasive blasted to remove laitance.

Non-Immersion - Surfaces must be acid-etched or abrasive blasted to remove laitance.

PRIMER: While VR-500 Series are self-priming on steel, four primers are available.

VR-502P, VR-504P, VR-506P are inhibitive primers to be used for maximum corrosion resistance.
VR-508P is a primer for use in food service areas, on concrete or porous substrates.

On concrete or porous surfaces, two (2) coats of primer with two (2) coats of finish are recommended. The first coat shall be thinned one (1) part primer to one (1) part S-240 solvent.

THINNER: Recommend use of S-440 solvent for spray and S-240 solvent for brush or roller application.

THINNING: The amount of thinner required is dependent upon temperature, ventilation, humidity; spray equipment used and desired film thickness.

SPRAY: VR-500 series coatings are normally diluted 10 to 20% with S-440 solvent depending on equipment and operators desired viscosity

BRUSH OR ROLLER: (non-porous surfaces) HERESITE VR-500 series coatings may be applied without dilution. If desired, a small amount of S-240 solvent may be used.

APPLICATION:
1. Do not apply if temperature is less than 5ºF (2ºC) above dewpoint or if temperature is below 45ºF (7ºC).
2. All spray equipment shall be thoroughly cleaned and the hoses in particular shall be free of old paint film and other contaminants.
3. Use standard production type spray guns:
   May also be used with airless spray equipment.

4. Air supply shall be uncontaminated. Adjust air pressure to approx. 50 lbs. at the gun and provide 15-20% pot pressure. Adjust spray gun by first opening liquid valve and then adjust air valve to give approx. an 8"-12" fan, holding gun perpendicular to the surface at a distance of 12".
5. Apply a mist bonding pass.
6. Allow to flash off for several minutes, but not long enough to allow film to completely dry.
7. Apply 3-4 criss-cross multi-passes maintaining a wet appearing film approx. 3-4 mils wet film thickness equals approx. 1.5 mils dry film thickness.
8. Air dry with ventilation.

CURING SCHEDULE:
AIR DRY: Recoat in 24 hrs @ 70ºF (21ºC)
FULL CURE: 7 TO 14 DAYS

FORCE CURE: 20 mins. per coat @ 250ºF (121ºC).

CLEAN UP: Use HERESITE S-440 solvent.

STORAGE: Coating should not be stored longer than 24 months. Storage at 80ºF (27ºC) may shorten shelf life.

To the best of our knowledge the technical data contained herein are true and accurate at the date of issuance and are subject to change without prior notice. No guarantee of accuracy is given or implied. We guarantee our products to conform to strict quality control. We assume no responsibility for coverage, performance or injuries resulting from use. Liability, if any, is limited to replacement of products. Prices are subject to change without prior notice. NO OTHER WARRANTY OR GUARANTEE OF ANY KIND IS MADE BY THE SELLER, EXPRESS OR IMPLIES, STATUTORY, BY OPERATION OF LAW, OR OTHERWISE, INCLUDING MERCHANTABILITY AND FITNESS FOR A PARTICULAR PURPOSE.

Section 3 – Component Manufacturers Information

TEXP NEMA PREMIUM EXPLOSION PROOF FAMILY

TYPE AEHHXU, AEHHXF, AEUHXF

Effective 08-01-11
Supercedes 12-01-09

APPLICATIONS:

- Grain Elevators
- Pumps
- Blowers
- Applications Where Explosive Gases are Present
- Applications Where Explosive Dusts/ Grains are Present

FEATURES:

- 1 - 150 hp
- 1 - 100 hp – Foot Mounted with C-Flange or 1 - 75 hp Round Body with C-Flange
- 3600, 1800, 1200 RPM
- Toally Enclosed Fan Cooled - Explosion Proof (IP55 Rating)
- UL and CSA Listed for Class I, Division I, Group D and Class II, Groups E, F, G; Temp Code T2D/T3B
- UL File #: E84757
- CSA File #: 64671
- NEMA Premium Efficient Design
- Meets or Exceeds EPAct Efficiency Levels on the Round Body C-Face Design
- Department of Energy Efficiency Certification #CC002A
- 36 Month Warranty from Date of Manufacture
- 60 Hz - 230/ 460V (Usable on 208V). 150 hp is 460V Only
- 1.15 Service Factor – Continuous
- Class F Insulation with Phenolic Alkyd Resin Varnish
- Standard with Klixon 9700K Temperature Limiting Switch, 1 per Phase
- Class B Temperature Rise
- NEMA Design B Torques
- Oversized Main Conduit Box Rotatable in 90 Degree Increments – Fully Gasketed with NPT Threaded Entrance – F1 Mounted.
- Designed for 40˚C Ambient Temperature - Note (1)
- Designed for 3300 ft. Elevation - Note (2)
- Bidirectional Rotation
- Cast Iron Frame, Fan Cover, End Bells, and Main Conduit Box. Capable of Withstanding Explosion Force as Required by UL.
- Stainless Steel Breather Drains with Bronze Filters
- 1045 Carbon Steel Shaft
- Aluminum Die Cast Squirrel Cage Rotor Construction
- Paint System: Phenolic Rust Proof Base Plus Polyurethane Top Coat
- Paint Color: Dark Blue – Munsell 5PB 4.5/ 2
- Vacuum De-Gassed Regreasable Ball (or Roller) Bearings on Frames 280TS - 445T/ TS Using Polyrex EM Grease
- Double Shielded Bearings on Frames 140T-280T Pre-Packed with MULTEMP SRL Grease
- Brass Flinger on Both Ends
- Cast Iron Inner and Outer Bearing Caps for Frames 280TS - 445T/ TS
- Grounding Terminal Inside Main Box
- Stainless Steel Nameplate
- UL Listed for Inverter Duty - Note (3)
- Inverter Duty Magnet Wire Capable of Withstanding Voltage Spikes of Up to 2200 Volts
- Speed Ranges: VT = 3 - 60 Hz; CT for 140 - 210 frames = 10 - 60 Hz.; CT for 250 - 320 frames = 13 - 60 Hz; CT for 360 - 440 frames = 16 - 60 Hz
- 9 Leads for 5 hp and Below, 12 Leads for 7.5 hp to 125 hp, 6 Leads for 150 hp
- Precautions should be taken to eliminate or reduce shaft currents that may be imposed on the motor by the VFD as stated per NEMA MG1, Part 31.4.4.3.

EXTRAS/ OPTIONS:

Please click here for a list of common modifications that can be performed.

Notes:

(1) Please consult factory for suitability in higher ambients.
(2) Please consult factory for suitability in higher elevations.
(3) Motor service factor is 1.0 when operated on a VFD.
(4) EXTRAS/ OPTIONS are limited on TEXP products.

TECO Westinghouse

ISSUED	PERFORMANCE DATA	ENCLOSURE
April 6, 2011	3-PHASE INDUCTION MOTOR	EXPLOSION PROOF
TYPE		CATALOG#
AEHHXU		XP0054

NAMEPLATE INFORMATION

OUTPUT HP	OUTPUT KW	POLE	FRAME SIZE	VOLTAGE	HZ	RATED AMBIENT	INS. CLASS	NEMA DESIGN	TIME RATING	SERVICE FACTOR
5	3.7	4	184T	230/460	60	40°C	F	B	CONT.	1.15

TYPICAL PERFORMANCE

FULL LOAD RPM	EFFICIENCY FULL LOAD MIN. %	EFFICIENCY FULL LOAD NOM. %	EFFICIENCY 3/4 LOAD %	EFFICIENCY 1/2 LOAD %	POWER FACTOR F. L. %	POWER FACTOR 3/4 LOAD %	POWER FACTOR 1/2 LOAD %	MAXIMUM POWER FACTOR CORRECTION
1745	87.5	89.5	91	91	84	80	70	2.1 KVAR

CURRENTS NO LOAD AT 208 VOLT	NO LOAD AT 230 VOLT	NO LOAD AT 460 VOLT	FULL LOAD AT 208 VOLT	FULL LOAD AT 230 VOLT	FULL LOAD AT 460 VOLT	LOCKED ROTOR AT 208 VOLT	LOCKED ROTOR AT 230 VOLT	LOCKED ROTOR AT 460 VOLT	NEMA KVA CODE LETTER
5.84	5.28	2.64	13.78	12.46	6.23	101.73	92.00	46.00	J

TORQUE FULL LOAD lb-ft	TORQUE LOCKED ROTOR %FLT	TORQUE PULL UP %FLT	TORQUE BREAK DOWN %FLT	INERTIA ROTOR WR^2 $lb\text{-}ft^2$	INERTIA NEMA LOAD WK^2 $lb\text{-}ft^2$	INERTIA MAX ALLOWABLE WK^2 $lb\text{-}ft^2$	ACCEL TIME NEMA LOAD WK^2 Sec	ACCEL TIME MAX ALLOWABLE WK^2 Sec
15.04	205	185	285	0.422	27	62.00	4.54	10.34

SAFE STALL TIME IN SECONDS COLD	SAFE STALL TIME IN SECONDS HOT	ALLOWABLE STARTS PER HOUR COLD	ALLOWABLE STARTS PER HOUR HOT	SOUND PRESSURE LEVEL @ 3 FT dB(A)
32	22	2	1	59

APPROVED:	M. PRATER	DRAWING NO.	31057XP0054	REVISION 0

DATE MAY 18, 2011	OUTLINE DIMENSIONS	MOTOR TYPE: AEHHXU
CATALOG NO. XP0054	3-PHASE INDUCTION MOTOR	FRAME NO. 184T

Pole	HP	KW	Hz	VOLT	Syn. Speed RPM
4	5	3.75	60	230/460	1800

Ins	Rating	Dimension in	Approx Weight	Bearings	
F	CONT.	inches	120 lbs.	DE: 6306ZZ	NDE: 6306ZZ

Totally Enclosed Fan-Cooled Type, Squirrel-Cage Rotor.

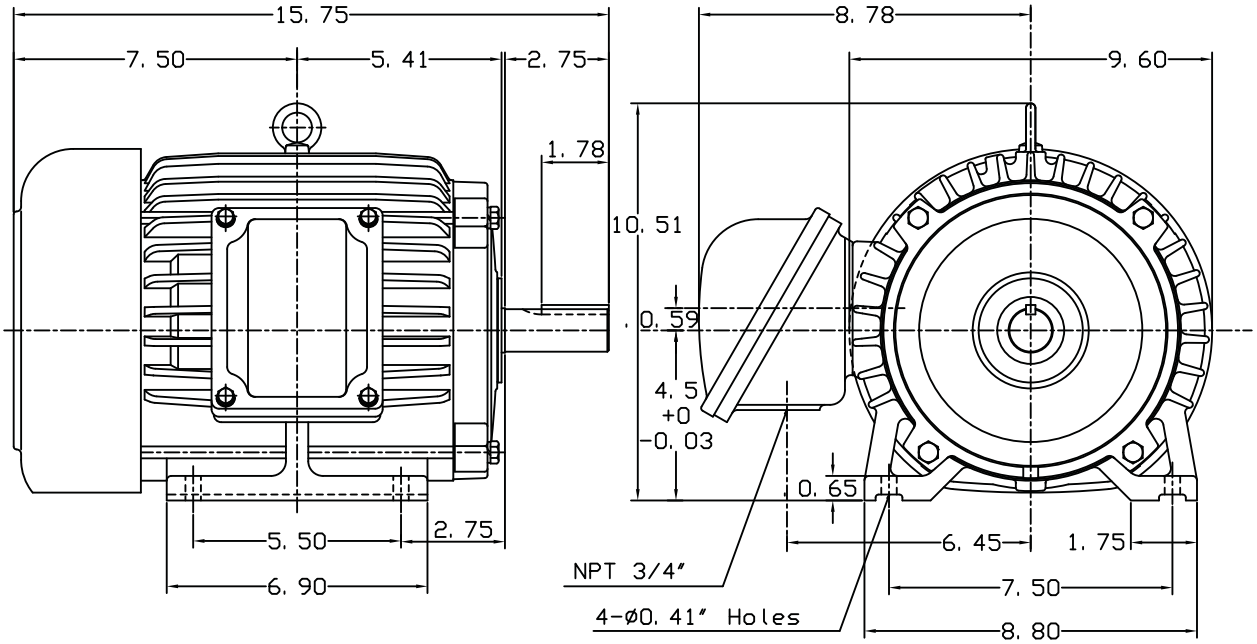

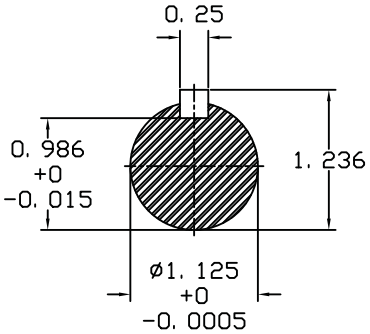

NOTE:
1.EXPLOSION PROOF:
CLASS I GROUP C, D AND
CLASS II GROUP E,F,G.

DWN.	J. H. LIANG	11·12·98	TECO Westinghouse	DWG NO.
CHKD.	C. S. LO	11·23·98		31049H821032
APPD.	Y. B. HUANG	11·23·98		

REV	REVISION	BY	ECN	DATE
A	INITIAL RELEASE	DWH	---	4/16/12

SA4052

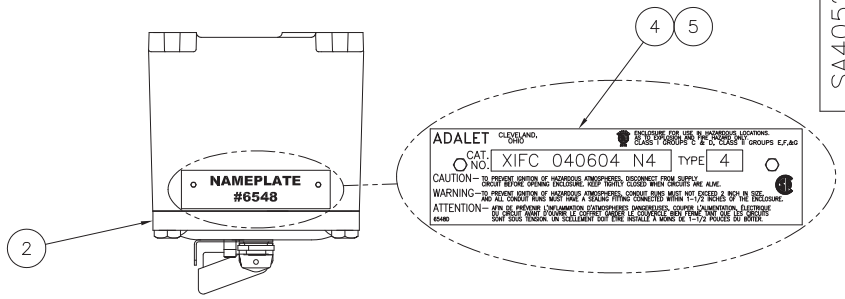

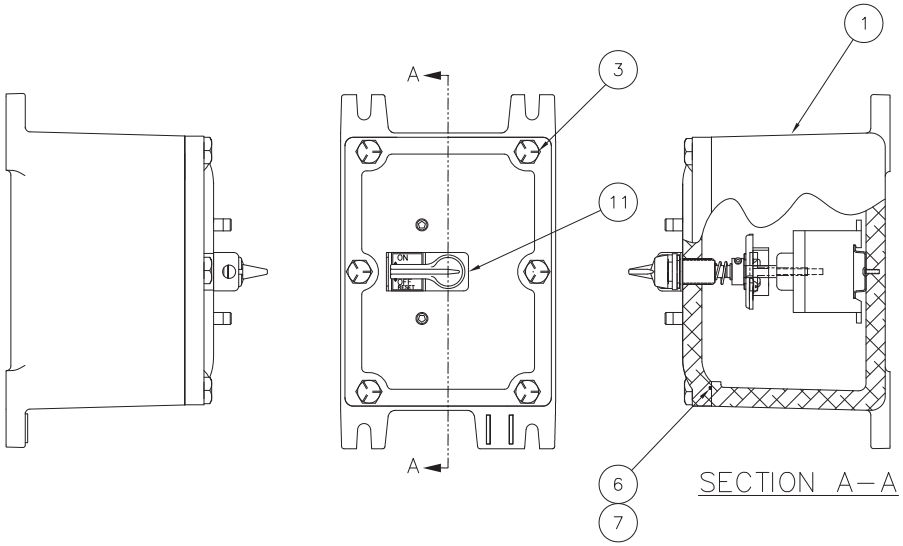

SECTION A–A

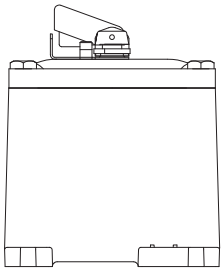

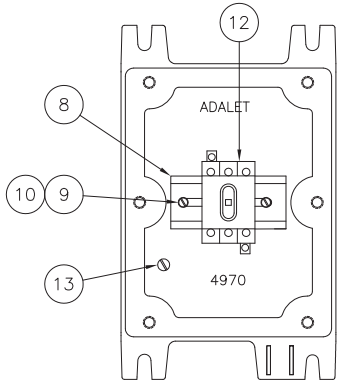

SHOWN WITH COVER REMOVED

*****USE SS COVER BOLTS*****

BILL OF MATERIAL

ITEM #	QTY.	PART #	DESCRIPTION
1	1	SA4052–1	XIFC 040604 BOX FOR SEAGATE
2	1	S6859–2	XIFC 0406 N4 COVER
3	6	2–223	BOLT HH 5/16–18 X 1 1/4 SS
4	1	6548	NAMEPLATE XIFC UL/CD & CSA/CD
5	2	6199	1/8 HEX HD. THD. CUTTING SCREW
6	26 IN.	7172	SEAL CORD FOR XIFC N4 ENCLOSURES (NOT SHOWN)
7	.1 OZ.	5451	ADHESIVE RUBBER GASKET BULK (NOT SHOWN)
8	1	7118–7	DIN RAIL 3.00
9	2	2–64	WSHR EXTOLW #8 SS
10	2	2–125	SCRW SLRH 8–32 x 3/8 SS
11	1	S6859–4	XRS01 ROTARY SWITCH ASSEMBLY
12	1	5543–1	DISCONNECT SWITCH ABB 16A OT16E3
13	1	5850–6	SCRW SLBHUC 10–24 x 1/4 S ZGR
14	1	4878	LABEL – FLANGE CLEANING INSTRUCTIONS (NOT SHOWN)
15	1	6549	LABEL – CAUTION STICKER CLASSIFIED ENCLOSURES (NOT SHOWN)

DO NOT SCALE DRAWING

UNLESS OTHERWISE SPECIFIED DIMENSIONS ARE IN INCHES.

CAST TOLERANCES ON DIMENSIONS NOT OTHERWISE SPECIFIED:
√ = 1/8" STOCK
FILLET OR CORNER RADII 1/8"
DRAFT 1 1/2°
FRAC ±1/16"
ANGLES ± 1°

MACHINE TOLERANCES ON DIMENSIONS NOT OTHERWISE SPECIFIED:
√ = 125
.XX ± .03" .XXX ± .010"
FILLET RADII .03"
EDGE BREAK .005"–.015" R. or 45°
ANGLES ± 0°–30'

GAGING FOR THREADED HOLES NOT OTHERWISE SPECIFIED:
NPT E–21–2.6
NPSM E–24–1.0

THIRD ANGLE PROJECTION

ADALET
A SCOTT FETZER COMPANY
Enclosure Systems · Cable Accessories
Cleveland, OH 44135

NOTICE TO PERSONS RECEIVING THIS DRAWING:
ADALET–PLM CLAIMS PROPRIETARY RIGHTS IN THE MATERIAL DISCLOSED HEREON. THIS DRAWING IS ISSUED IN CONFIDENCE FOR ENGINEERING INFORMATION ONLY AND MAY NOT BE REPRODUCED OR USED TO MANUFACTURE ANYTHING SHOWN HEREON WITHOUT DIRECT WRITTEN PERMISSION FROM ADALET–PLM TO THE USER.

MATERIAL N/A
FINISH N/A
CAT NO XIFC 040604 N4

TITLE
MODIFIED XIFC 040604 N4 ASSEMBLY FOR SEAGATE

DRAWN BY DWH
DATE 4/16/12
ENG APPROVAL
PLOT SCALE 1=2.5
MFG APPROVAL
DWG SIZE C
DWG NO SA4052
SHT 10F1
REV A

XIF SERIES

XIF: Junction Boxes
XIFX: Flameproof Junction Boxes
XIFC: Explosionproof Control Enclosures
XIFCX: Flameproof Control Enclosures

DESIGN OPTIONS

MOUNTING PANS **Three Materials Available:**

Steel: (XSM) Galvanized 12 gauge steel plate. The catalog number includes the steel mounting pan complete with ¼" high spacers and stainless steel mounting screws.

Aluminum: (XSA) Consult factory for availability.

Phenolic: (XSB) A special phenolic laminated material that has high mechanical and dielectric strength. It is excellent for mounting and wiring control equipment. The catalog number includes the phenolic board, ⅜" thick, complete with ¼" high spacers and stainless steel mounting screws.

AUXILIARY OPERATOR INSTALLATIONS

Available in XIFC and XIFCX covers

EXTERNAL EARTHING DEVICE

Supplied on XIFX and XIFCX

Gasket for Type 4 applications available for XIF and XIFC

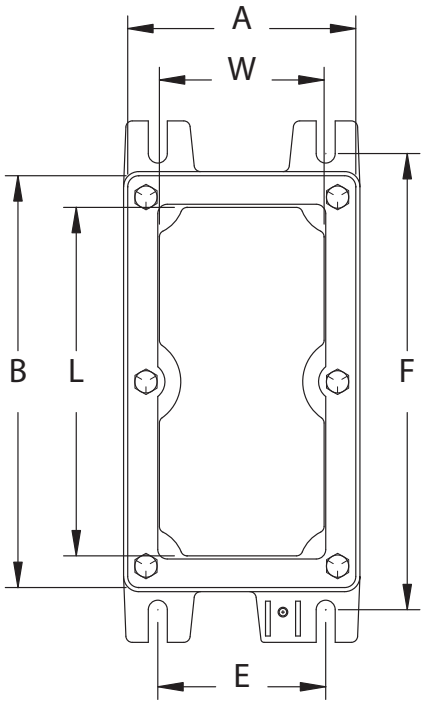

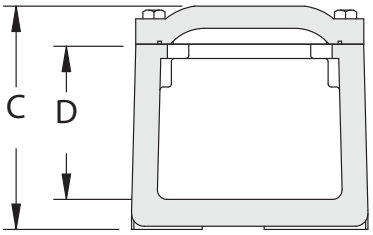

The **ADALET** Engineering Department is Available to Assist you in the Selection of Enclosures and Accessories.

CERTIFICATIONS

XIF SERIES

CERTIFICATIONS

Class I, Division I, Groups C & D
Class II, Groups E,F,G
Type 4

LISTED 437S

XIFX SERIES

CERTIFICATIONS

Class I, Divison I, Groups C & D Ex d IIB
Class II, Groups E, F, G — Ex d IIB Ex 6; T5: -20 < Ta < 55 C — II 2GD
Class III — DEMKO 07 ATEX 0603868U
Class I, Zone 1, AEx d IIB
Ex d IIB
IECEx Ex d IIB
IEC60529: IP 40
IECEX UL.08.0011U

XIFC SERIES

CERTIFICATIONS

Class I, Division I, Groups C & D
Class II, Groups E, F, G
Type 4

XIFCX SERIES

CERTIFICATIONS

Class I, Division I, Groups C,D
Class II, Groups E, F, G — Ex d IIB T5 Tamb +55° C
Class III — 0539 CE II 2 G Ex
Class I, Zone 1, AEx d IIB — DEMKO 09 ATEX 0816570X
Ex d IIB T6 (T5 Tamb +55° C)
IECEx Ex d IIB T6 (T5 Tamb +55° C)
IECEx UL 08.0023X
IP40

XIF SERIES

XIF: Junction Boxes
XIFX: Flameproof Junction Boxes
XIFC: Explosionproof Control Enclosures
XIFCX: Flameproof Control Enclosures

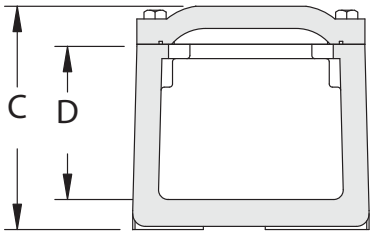

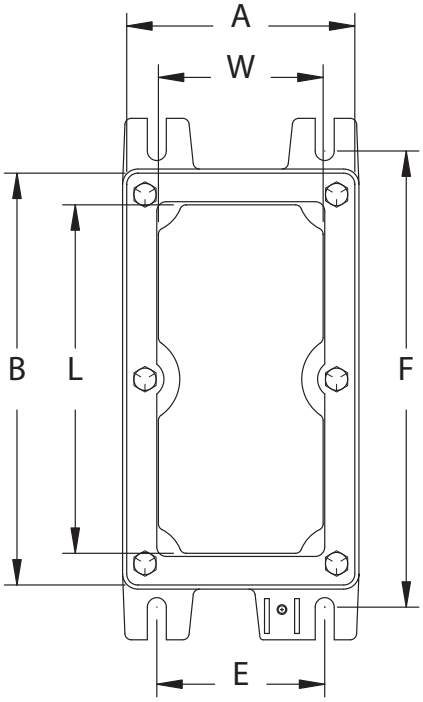

XIFC/XIFCX Catalog #	XIF/XIFX Catalog #	Inside Nom. Dimensions W	L	D	Overall Dimensions A	B	C	Mounting Lug CL to CL E	F	Mtg. Bolt Size	Ship Weight	Pan Catalog # Steel	Alum.	Phen	Nom. Dimensions W	L	Steel Pan Weight
XIFC/X030303	XIF/X030303	3 5/16	3 5/16	3 3/16	4 1/2	4 1/2	4 5/16	3 1/4	5 1/2	5/16	5	XSM0303	XSA0303	XSB0303	3	3	1/4
XIFC/X030603	XIF/X030603	3 1/4	5 3/4	3	4 1/2	7 1/16	4 1/4	3 1/4	8	5/16	6 1/2	XSM0306	XSA0306	XSB0306	3	5 1/2	1/2
XIFC/X030703	XIF/X030703	3 1/4	6 7/8	3	4 1/2	8 1/8	4 5/16	3 5/16	9	5/16	7 1/2	XSM0307	XSA0307	XSB0307	3	6 1/2	1/2
XIFC/X030903	XIF/X030903	3 11/32	8 15/16	3	4 1/2	10 1/16	4 5/16	3 1/4	11	5/16	9 1/2	XSM0309	XSA0309	XSB0309	3	8 1/2	3/4
XIFC/X031103	XIF/X031103	3 1/4	10 15/16	3	4 1/2	12	4 5/16	3 1/4	13	5/16	11	XSM0311	XSA0311	XSB0311	3	10 1/2	1
XIFC/X031303	XIF/X031303	3 1/4	12 13/16	3	4 1/2	14 1/16	4 5/16	3 1/4	15	5/16	11 1/2	XSM0313	XSA0313	XSB0313	3	12 1/2	1 1/4
XIFC/X031503	XIF/X031503	3 1/4	14 3/4	3 1/16	4 1/2	16	4 5/16	3 1/4	17	5/16	13	XSM0315	XSA0315	XSB0315	3	14 1/2	1 1/2
XIFC/X031803	XIF/X031803	3 1/4	17 3/4	3	4 1/2	19	4 1/4	3 1/4	20	5/16	16	XSM0318	XSA0318	XSB0318	3	17 1/2	1 3/4
XIFC/X032403	XIF/X032403	3 1/4	23 9/16	3	4 1/2	25 1/16	4 5/16	3 1/4	26	5/16	21	XSM0324	XSA0324	XSB0324	3	23 1/2	2 1/4
XIFC/X033003	XIF/X033003	3 1/4	29 1/2	3	4 9/16	31 1/16	4 5/16	3 1/4	32 1/8	5/16	28	XSM0330	XSA0330	XSB0330	3	29	2 3/4
XIFC/X033603	XIF/X033603	3 1/4	35 7/16	3	4 1/2	37 1/4	4 3/8	3 1/4	38 1/8	5/16	33	XSM0336	XSA0336	XSB0336	3	35	3 1/4
XIFC/X040604	XIF/X040604	4 1/8	5 7/8	4	5 3/8	7	5 5/16	4 3/8	8 1/4	5/16	8 1/2	XSM0406	XSA0406	XSB0406	3 7/8	5 1/2	3/4
XIFC/X041204	XIF/X041204	4 1/4	11 13/16	4	5 1/2	13 1/8	5 5/16	4 3/8	14 1/4	5/16	15 1/2	XSM0412	XSA0412	XSB0412	3 7/8	11 1/2	1 1/2
XIFC/X060606	XIF/X060606	5 1/2	5 1/2	6	7	7	7 3/8	5 1/2	8 1/2	3/8	14	XSM 0606	XSA 0606	XSB 0606	5½	5½	1
XIFC/X060608	XIF/X060608	5 1/4	5 1/2	8	7	7	9 3/8	5 1/2	8 1/2	3/8	17 1/2	XSM 0606	XSA 0606	XSB 0606	5½	5½	1
XIFC/X061206	XIF/X061206	5 1/4	11 1/8	6	7 1/4	13 1/2	7 5/8	5 1/2	15	3/8	28	XSM 0612	XSA 0612	XSB 0612	5 1/2	11 1/2	2
-	XIF/X061806*	6	18	6	7 1/2	19 1/2	7 13/16	5 1/2	21 1/8	3/8	33	XSM 0618	XSA 0618	XSB 0618	5 5/8	16 7/8	3
-	XIF/X062406*	6	24	6	7 1/2	25 1/2	7 3/4	5 1/2	27	3/8	59	XSM 0624	XSA 0624	XSB 0624	5 5/8	22 7/8	4
-	XIF/X063606*	6	36	6	7 1/2	37 1/2	7 13/16	5 1/2	39	3/8	84	XSM 0636	XSA 0636	XSB 0636	5 5/8	34 7/8	6
XIFC/X070704	XIF/X070704	6 7/8	6 7/8	4	7 15/16	7 15/16	5 5/16	6 5/8	9 1/8	3/8	13	XSM 0707	XSA 0707	XSB 0707	6 1/2	6 1/2	1 1/2
-	XIF/X071603*	7	16	3 1/2	8 1/2	17 1/2	5 5/16	6 1/2	18 7/8	3/8	36	XSM 0716	XSA 0716	XSB 0716	6 1/2	15 1/2	3
-	XIF/X083206*	8	32	5 7/8	9 1/2	33 1/2	7 7/8	7 1/2	35	3/8	87	XSM 0832	XSA 0832	XSB 0832	7 1/2	31 1/2	7 1/2

* Limited Approvals

The **ADALET** Engineering Department is Available to Assist you in the Selection of Enclosures and Accessories.

Non-fusible Disconnect switches

Non-fusible disconnect switches
16A – 3150A, 600V

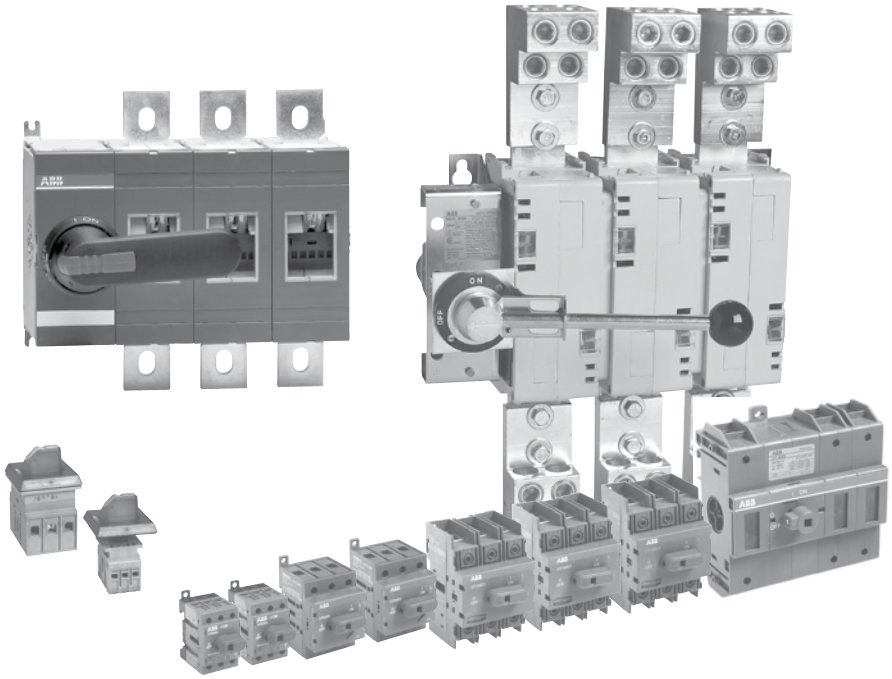

ABB SwitchLine includes 16 different amperage sizes from 16A to 3150A. The basic construction provides flexibility, safety, and high performance in an extremely compact size. ABB SwitchLine is a perfect choice for all switching applications from industrial motor control to construction safety switches.

International acceptance

UL listed, CSA approved, IEC rated, CE marked, and most other international standards.

UL98 (CSA 22.2 No.4) — UL File # E101914, CSA File #LR58077
For OT30, OT60, OT100, OT125, OT200, OT400, OT600, OETL-NF800 – OETL-NF2000 switches, OH_ pistol grip handles
Suitable for use as motor disconnects or industrial control panel disconnects on service entrance equipment, panelboards, switchboards, industrial control equipment, motor control centers, etc. and are horsepower rated and ampere rated.

UL508 (CSA 22.2 No. 14) — UL File # E63822, CSA File #LR58247
For OT16 – OT80 switches, OH_ selector handles
Suitable for use in equipment or machinery as motor controllers & motor disconnects and are horsepower and ampere rated.

IEC
Tested in accordance to IEC 947-1 and 3, IEC 664, IEC 269, and IEC 204

CE
Compliance with the European Machine Directive IEC 204 (EN 60204)

General information
Selection guide
OT16F3 – OT160E3

OT16F3 OT25F3 OT40F3

OT63F3 OT80F3

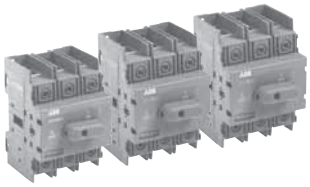

OT30F3 OT60F3 OT100F3

Catalog number	3 pole	OT16F3	OT25F3	OT40F3	OT63F3	OT80F3	OT30F3	OT60F3	OT100F3
General purpose amp rating	**A**	**16**	**25**	**40**	**60**	**80**	**30**	**60**	**100**
Approvals ①									
	2 pole	N/A	N/A	N/A	N/A	N/A	N/A	N/A	N/A
	3 pole	UL508	UL508	UL508	UL508	UL508	UL98	UL98	UL98
	4 pole	UL508	UL508	UL508	UL508	UL508	UL98	UL98	UL98
Technical ratings – UL,CSA ②									
Max operating voltage	V	600	600	600	600	600	600	600	600
Max horsepower rating									
Three phase									
240V	HP	5	7.5	10	15	20	10	20	30
480V	HP	10	15	20	30	40	20	40	50
600V	HP	10	20	25	30	40	30	40	50
Single phase									
120V	HP	1	1.5	2	2	2	2	3	5
240V	HP	2	3	5	5	5	5	7.5	15
Technical ratings – IEC②									
Rated insulation and operational voltage. AC20 and DC20	V	750	750	750	750	750	750	750	750
Rated thermal current, I_{th}									
AC 20/DC 20 open	A	25	32	40	63	80	40	63	115
AC 20/DC 20 enclosed	A	25	32	40	63	80	40	63	115
AC 21A ≤500V	A	16	25	32	63	80	40	63	100
≤690V	A	16	25	32	63	80	40	63	100
Rated operational power AC23									
400/415V	kW	7.5	9	11	22	37	15	18.5	37
690V	kW	7.5	9	11	15	18.5	15	15	37
Physical characteristics									
Weight ③ 3 pole	lb	0.24	0.24	0.24	0.59	0.59	0.79	0.79	0.79
Dimension 3 pole H	in	2.68	2.68	2.68	3.60	3.60	3.94	3.94	3.94
W	in	1.38	1.38	1.38	2.07	2.07	2.76	2.76	2.76
D	in	2.20	2.20	2.20	2.85	2.85	2.95	2.95	2.95
Accessories									
Terminal lug kit		Integral	Integral	Integral	Integral	Integral	Integral	Integral	Integral
Terminal shroud		•	•	•	•	•	•	•	•
Auxiliary contact		•	•	•	•	•	•	•	•
Shaft/handle diameter		6mm .24" x .24"	6mm .24" x .24"	6mm .24" x .24"	6mm .24" x .24"	6mm .24" x .24"	6mm .24" x .24"	6mm .24" x .24"	6mm .24" x .24"
Handle UL/NEMA type									
Type 1, 3R, 12		•	•	•	•	•	•	•	•
Type 1, 3R, 4, 4X, 12		•	•	•	•	•	•	•	•
Handle type									
Selector		•	•	•	•	•	—	—	—
Pistol		•	•	•	•	•	•	•	•
Recommended pistol handle length		45 - 65mm	45 - 65mm	45 - 65mm	45 - 65mm	45 - 65mm	45 - 65mm	45 - 65mm	45 - 65mm
Maximum recommended shaft length		290mm	290mm	290mm	290mm	290mm	290mm	290mm	290mm
Conversion kits									
6 pole		•	•	•	•	•	•	•	•
Transfer		•	•	•	•	•	•	•	•
Bypass		•	•	•	•	•	•	•	•
Mechanical interlock		•	•	•	•	•	•	•	•
Electrical interlock		—	—	—	—	—	—	—	—

• = Available
— = Not available

① UL listed switches are also CSA approved.
② For complete technical information please see page 18.38 – 18.70.
③ Switch only.

Approximate dimensions
OT16F3 – OT100F3
Base & DIN rail mounted switches

00.00 / 00.00 Inches [Millimeters]

OT16F3, OT25F3, OT40F3 — base & DIN rail mounted switch

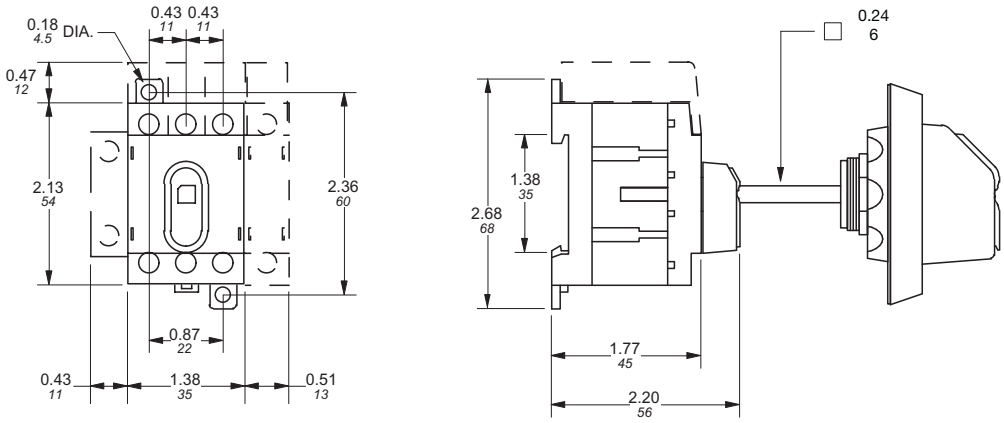

OT63F3, OT80F3 — base & DIN rail mounted switch

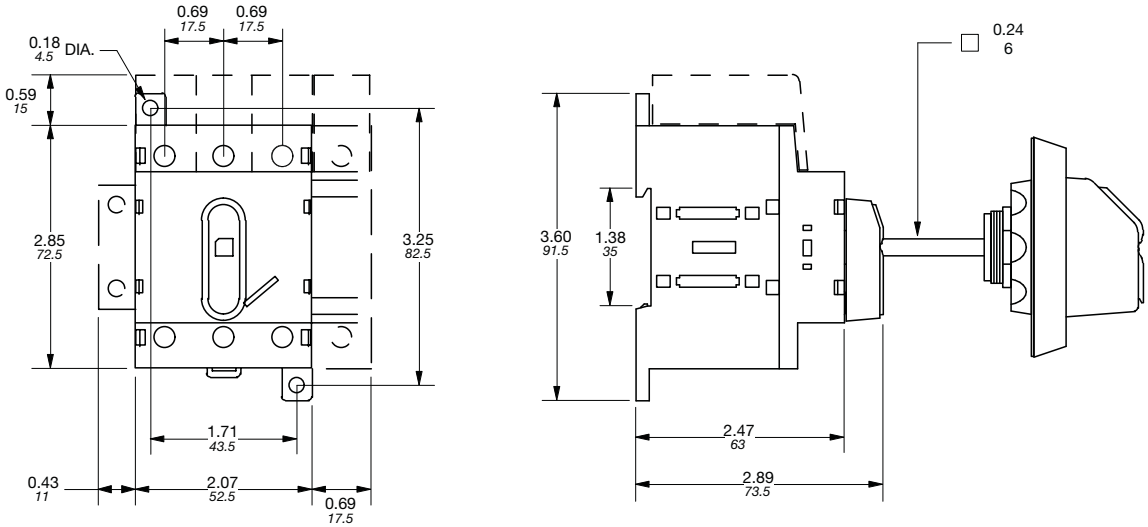

OT30F3, OT60F3, OT100F3 — base & DIN rail mounted switch

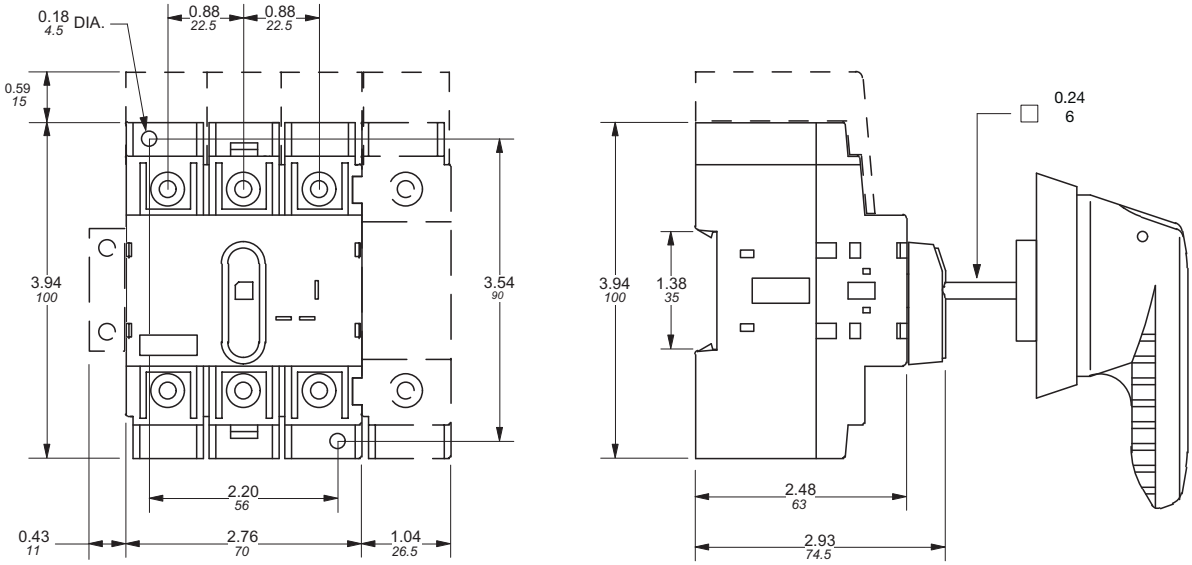

Section 4 – Verantis Corporation Drawings

REV.	DATE	DESCRIPTION	DRWN	CHK'D

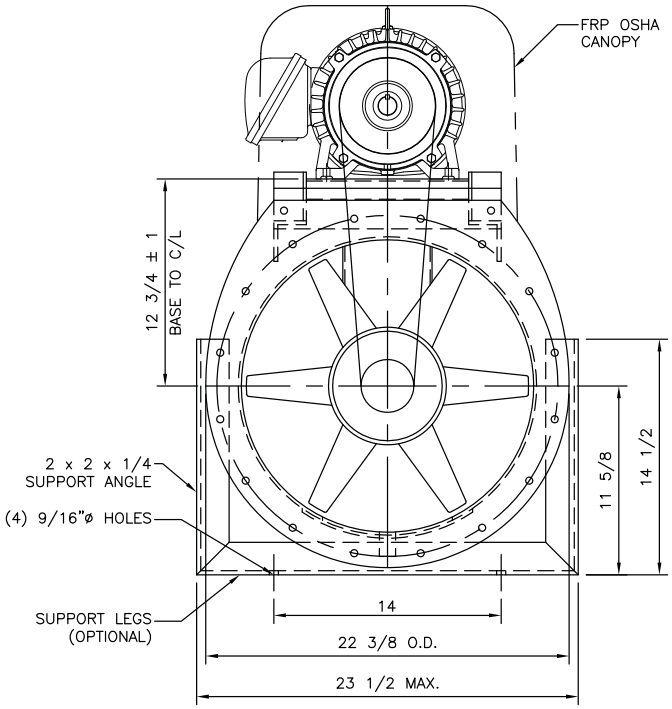

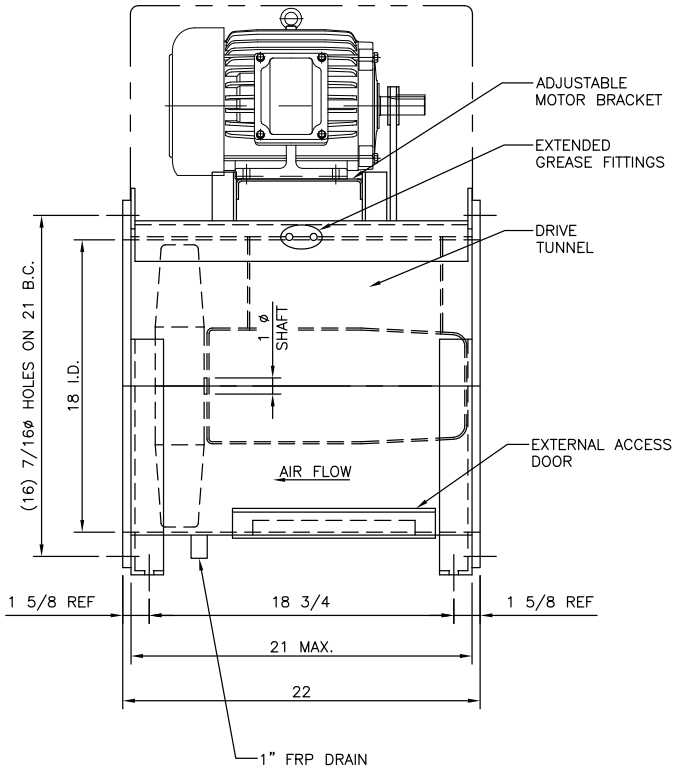

FAN SPECIFICATION			
HOUSING MATERIAL:	DEREKANE 510B-400		
IMPELLER MATERIAL:	DION 9800		
CONSTRUCTION CLASS:	II		
COLOR:	GREEN		
CFM: 4500	RPM: 2788		
TEMPERATURE:	70° F DB	70° F WB	
	ACTUAL	STD (70° F)	
AIR DENSITY	0.0729 LB/CF	0.075 LB/CF	
STATIC PRESS	2 " W.G.	" W.G.	
BRAKE HP	2.71 BHP	BHP	
FAN ACCESSORIES			
INLET FLEX CONNECTOR	–	DRILLED	–
OUTLET FLEX CONNECTOR	–	DRILLED	–
SHAFT MATERIAL:	CARBON STEEL		
SHAFT SEAL:	NEOPRENE		
MOTOR RAILS:	NONE		
DRIVE:	ADJUSTABLE		
VIBRATION MOUNTS:	NONE		
MOTOR SPEC			
HP 5	PHASE 3		
RPM 1800	CYCLE 60		
FRAME SIZE 184T	ENCLOSURE TEXP		
VOLTAGE 460	WEIGHT 145 LB		
CUSTOMER INFORMATION			
P.O. NO.	RR13-2628		
TAG:	F-51005		

NOTES:
1. ALL DIMENSIONS ARE IN INCHES.
2. INLET & OUTLET DUCTWORK TO BE INDEPENDENTLY SUPPORTED AND ISOLATED FROM FAN WITH EXPANSION JOINTS (BY OTHERS).
3. FAN BASE WILL BE CONSTRUCTED OF CARBON STEEL, COATING WITH HERESITE VR-500 AIR DRY PHENOLIC SERIRES.
4. ALL AIRSTREAM BOLTING HARDWARE IS 316 S.S. MATERIAL. GASKET MATERIAL IS EPDM.
5. FAN BEARINGS HAVE A MINIMUM L10 LIFE RATING OF 100,000 HOURS.
6. IMPELLER CLASS II CONSTRUCTION WITH STANDARD ENCAPSULATED CARBON STEEL HUB ASSEMBLY.
7. FAN FABRICATED IN GENERAL ACCORDANCE WITH ASTM-D4167, NBS PS15-69 AND ASTM-C582. FANS ARE RATED IN ACCORDANCE WITH AMCA STANDARDS BUT DO NOT CARRY THE AMCA SEAL.
8. FANS ARE BALANCED AT OPERATING SPEED. BALANCE TOLERANCE NOT TO EXCEED 0.078 IN/SEC VELOCITY (FILTER IN).
9. INTERNAL SURFACES INCLUDE (1) LAYER OF "C" GLASS. EXTERNAL SURFACES INCLUDES ULTRAVIOLET INHIBITOR FOR ENVIRONMENTAL PROTECTION.
10. ALL INTERNAL SURFACES COATED WITH CARBON GEL WITH EMBEDDED S.S. GROUNDING LUG WITH STRAP TO FAN BASE.
11. FAN PROVIDED WITH DISCONNECT SWITCH.

DISP.	DRAWING STATUS	DATE
	CUSTOMER APPROVED FOR FABRICATION	/ /

THIS DRAWING IS THE PROPERTY OF VERANTIS CORPORATION. IT IS LOANED TO YOU SUBJECT TO RETURN ON DEMAND. THE CONTENTS ARE CONFIDENTIAL AND MUST NOT BE COPIED OR GIVEN TO ANY THIRD PARTIES FOR USE OR EXAMINATION UNLESS OTHERWISE AGREED TO IN WRITING BY VERANTIS CORP.

TITLE
FL-18 FAN
AXIAL

CUSTOMER
FLUID SYSTEMS
PORTLAND, OR

TOLERANCES UNLESS OTHERWISE SPECIFIED
1 PL DECIMALS ±.015
2 PL DECIMALS ±.010
3 PL DECIMALS ±.005
FRACTIONS ±1/16
ANGLES. ±1°

DRAWN: JZ
DATE: 8/27/13

SIZE: B | TOTAL WEIGHT: 500 LB | SCALE: 1:1 | SHEET: 1/1

VERANTIS CORP.
7251 ENGLE RD SUITE 300, PLAZA SOUTH ONE BLDG,
MIDDLEBURG HTS, OH, 44130

4093-001

REV. 0

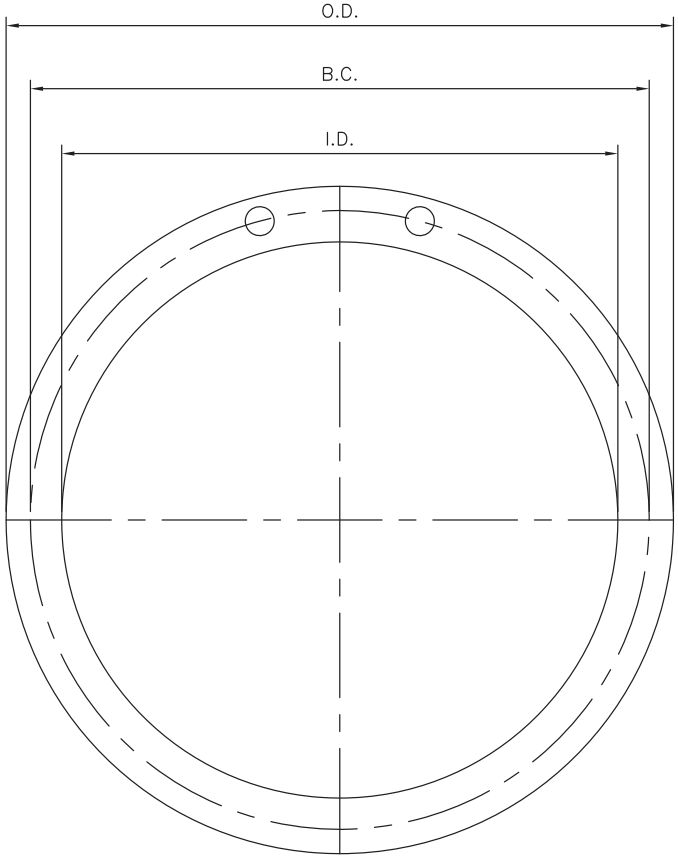

FAN SIZE	I.D.	O.D.	B.C.	HOLES		FLANGE THK.
				QTY.	DIA.	
2 4	4	8 3/8	7	4	7/16	1/4
6	6	10 3/8	9	8	7/16	1/4
8	8	12 3/8	11	8	"	"
10	10	14 3/8	13	12	"	3/8
12	12	16 3/8	15	12	"	"
14	14	18 3/8	17	12	"	"
16	16	20 3/8	19	16	"	1/2
18	18	22 3/8	21	16	"	"
20	20	24 3/8	23	20	"	"
24	24	28 3/8	27	20	"	"
30	30	34 3/8	33	28	"	"
36	36	40 3/8	39	32	"	"
42	42	46 3/8	45	36	"	5/8
48	48	54 3/8	52	44	9/16	"
54	54	60 3/8	58	44	"	"
60	60	66 3/8	64	52	"	"
72	72	78 3/8	76	60	"	3/4

NOTES:

1. ALL DIMENSIONS ARE IN INCHES.
2. FLANGE DIMENSIONS ARE IN ACCORDANCE WITH TABLE–2 IN PRODUCT STANDARD PS 15–69.
3. FLANGES ARE FURNISHED DRILLED ONLY WHEN SPECIFIED ON THE FAN DRAWING.
4. BOLT HOLES STRADDLE NATURAL CENTERLINES.

REV.	DATE	DESCRIPTION	DFT	CHK
2	11/15/11	ADDED FAN SIZE #4 TO CHART	MCS	
1	10/29/99	RE–DRAWN	KZ	

ITEM

FAN INLET & TRANSITION OUTLET FLANGES (PS 15–69)

NOTICE:

THIS DRAWING IS THE PROPERTY OF VERANTIS CORP. IT IS LOANED TO YOU SUBJECT TO RETURN ON DEMAND. THE CONTENTS ARE CONFIDENTIAL & MUST NOT BE COPIED OR GIVEN TO ANY THIRD PARTIES FOR USE OR EXAMINATION UNLESS OTHERWISE AGREED TO IN WRITING BY VERANTIS CORP.

VERANTIS CORP.

7251 Engle Rd. Suite 300/Plaza South One Middleburg Hts., OH 44130

VERANTIS SUCCESOR IN INTEREST TO CEILCOTE AIR POLLUTION CONTROL

DRAWN: KZ	CHK'D.:	FAN STD F–1	REV. 2
DATE: 10/29/99	DATE:		

CAD File: STD_F–1.DWG

[X] CUST. [X] SUB.