ELECTRICAL OPERATION AND MAINTENANCE MANUALS

Electric Service, Inc.

Waste Water Treatment Plant Improvements

Wenatchee, WA.

2013

Owner:	**City of Wenatchee**
Engineer:	**HDR Engineering, Inc.**
General Contractor:	**Apollo Inc.**
Electrical Contractor:	**Magnum Electric Service, Inc.**

Electrical Operating and Maintenance Manual for:

Waste Water Treatment Plant Improvements, Wenatchee, WA

1	**Instrumentation** Specification Section 13440
2	**Arc Flash Hazard Study** Specification Section 16010
3	**Variable Frequency Drives: Low Voltage** Specification Section 16265
4	**Safety Switches** Specification Section 16410
5	**Motor Control Equipment** Specification Section 16442
6	**Dry Type Transformers** Specification Section 16460
7	**Overcurrent and Short Circuit Protection** Specification Section 16490
8	**Low Voltage Surge Suppression** Specification Section 16491
9	**Electrical Metering Devices** Specification Section 16492
10	**Control Equipment** Specification Section 16493
11	**Lighting** Specification Section 16500
12	**Architectural Theme LED Lighting** Specification Section 16512
13	**Panelboards** Specification Section 16441

Specification Section 13440

Instrumentation

Technical Systems Inc.
2303 196th Street SW
Lynnwood, WA 98036
Tel 425.775.5696
Fax 425.775.9074
TSIcontrols.com

Equipment Information and Drawings Submittal

on

City of Wenatchee WWTP
WWTP Improvements Project P0913

by

Technical Systems, Inc.
2303 - 196th St. SW
Lynnwood, WA 98036
(425) 775-5696

for

Magnum Electric

TSI Job 7374

Project Manager: Lenny Stoltman

Date: January 16, 2012

anchor scientific inc.

Float Switches

eco·float MODEL G

Features
- **Mercury Free**
- **Variety of Mounting Styles**
- **Variety of Circuit Configurations**
- **Installation Easy**
- **Differential In One Float**
- **Replaces Diaphragm and Mercury Switches**

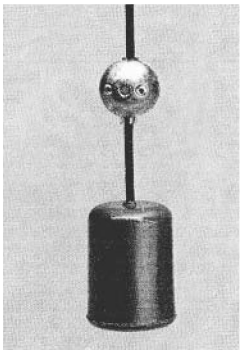

Priced from $27.50

Description
The Eco-float is a mercury-free float switch for controlling liquid levels in a variety of applications. A snap-action switch is activated by a steel ball rolling back and forth within a switching tube in a plastic float housing. There is a minimum differential between "on" and "off" of approximately 3.5 inches. Greater differentials can be achieved when the pipe mounted or externally weighted mounting styles are used. Various lengths of cable and circuit configurations are available and in stock.

Applications
The Eco-Float can be used in a variety of liquid level monitoring applications including sumps, sewage ejectors, septic tanks, vaults, lift stations, and tanks. Eco-Floats are ruggedly constructed of corrosion resistant materials, enabling them to be used in a variety of different liquids. Some applications are subject to additional requirements described in the National Electric Code.

Specifications

Cable	18-2 or 18-3 SJO W/A, 60 C., 41 x 34 stranding dia. - . 29(18-2); .31(18-3)
Float Housing	Polypropylene Dim: 3.OD x 4.25
Electrical Ratings	7A. @ 115 VAC; 3.5A @ 230 VAC
Clamp	Polypropylene, (Model GP)
External Weight	Lead, 300 series stainless steel (Model GSE)
Temp. Limit	140° F

Ordering Information

Specify:	
Model	G
Mounting Sytle	SE (external weight) SI (internal weight) P (pipe mounted)
Cable Length	10, 15, 20, 30, 40, 50 Custom lengths available
Circuit Configuration	NO (normally open) NC (normally closed) NONC (normally open/ normally closed)

Example
GSI 20NO - Eco-Float, suspended internal wt. 20', normally open contacts.

solo·float

FEATURES
- **Reliability**
- **Adjustable Pumping Range**
- **Manual Operation**
- **Non-mercury Element**
- **Converts Non-automatic Pumps To Automatic**
- **Replaces Diaphragm Pressure Switches**
- **Easy Installation**
- **In Stock, Low Cost**

Priced from $28.00

DESCRIPTION
The new Solo-Float" is a direct acting float switch for controlling 11/2 HP and smaller pump motors. The new Solo-Float has been completely redesigned and uses a metal ball rolling back and forth in a tube to actuate a reliable, snap-action switch. An adjustable, plastic clamp with stainless steel hose clamp is provided for attaching the Solo-Float at the appropriate level on the pump discharge pipe. By varying the tether length, a pumping range of 8" - 14" can be achieved. The Solo-Float is available with a piggyback plug in either a 115 volt or 230 volt configuration. It is also available blunt cut, without a plug, for wiring to an Anchor Scientific JX junction box.

APPLICATIONS
The Solo-Float can be used in a variety of liquid level applications, including sumps, sewage ejectors, septic tanks, vaults and tanks. The corrosion resistance of the materials used in its construction also make the Solo-Float a good choice for many corrosive applications.

Example

D Model Type	20 Cable Length	NO Circuit Config.	115 Plug Style
	Standard Models		
D	10	NO	115
	15	NC	230
	20		-(Blunt)
	30		

SPECIFICATIONS

Cable	16-2, SJO W/A, 60° C. Dia.- .32 65 Strands x #34
Float Housing	Polypropylene. Dim 5.0" x 3.0" D. Blue - Normally Open Red - Normally Closed
Clamp	Polyethylene Pipe/Cable Clamp, Stainless Steel Hose Clamp, Range: 3/4" - 3"
Electrical Rating	1/2 HP @ 115V, Single Phase 11/2 HP @ 230V, Single Phase UL 508 Ind. Con. Eq.

ORDERING INFORMATION
Three variables must be specified when ordering SoloFloats: 1.) Cable Length 2.) Circuit configuration. 3.) Plug Voltage. Cable lengths are available in 5 foot increments from 10' to 30". Consult factory for longer lengths. The circuit configuration is either `NO', normally open, (pump down); or 'NC', normally closed, (pump up). The plug voltage also must be specified: `115' for 115 volt or `230' for 230 volt applications.

AAElectricOnline.com AA ELECTRIC 1-800-237-8274

ITEM 3

Ultima® X Series Gas Monitors

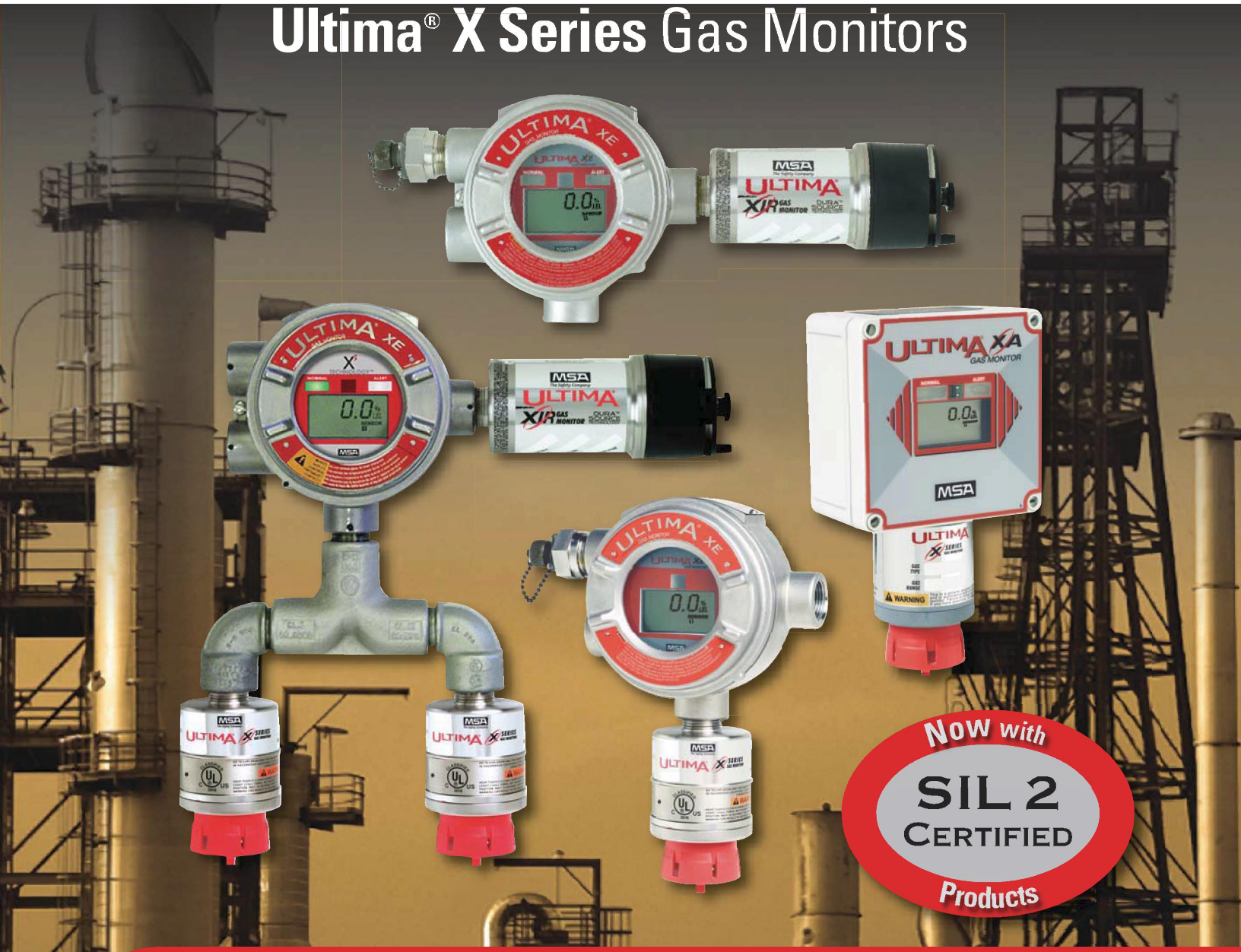

Versatile fixed instruments provide continuous monitoring of many hazardous gases using catalytic, electrochemical, and infrared gas detection methods.

New features & EXtreme design, now with HART Protocol and DuraSource™ Technology.

X Factors

- DuraSource Technology providing extended infrared sensor life
- HART field communications protocol option for improved asset management.
- Patented sensor disconnect-under-power allows sensor change-out without declassifying a hazardous area
- Interchangeable smart sensors: pre-calibrated, installation-ready sensor modules, field-replaceable without tools
- New sensor type quick recognition and reconfiguration of alarm and relay settings
- LCD conveniently alternates between sensor reading and gas type plus scrolling messaging for ongoing diagnostic checks
- Single-board design for ultimate reliability and serviceability

MSA
The Safety Company

ITEM 3

Ultima® X Series Gas Monitors

Ultimate Features. . . EXtreme Design

Ultima XE Gas Monitor – Explosion-Proof, Stainless Steel Gas Detector with Display

The Ultima XE Gas Monitor offers:

- Explosion-proof 316 stainless steel
- Multiple-entry mounting enclosure
- Type 4X, IP66

Ultima XA Gas Monitor – Water- and Corrosion-Resistant, All-Purpose, Polycarbonate Gas Detector with Display

The Ultima XA Gas Monitor offers:

- Nema 4X rating
- Light weight (only 1.5 lbs)

Ultima XIR Gas Monitor – Explosion-Proof, Stainless Steel, Infrared Gas Detector with Display

The Ultima XIR Gas Monitor offers:

- DuraSource Technology for improved IR sensor life
- 316 Stainless steel
- Multiple-entry mounting enclosure
- Fast response time
- Operation based on dual-wavelength, heated-optics technology, providing definitive compensation for temperature, humidity and aging effects
- IR technology which offers excellent long-term stability, eliminating the need for frequent calibrations
- A sintered-disk-free design for optimum performance in harsh environments
- No-gas calibration. Only a zero adjustment is required for full calibration.
- Type 4X, IP66

MSA
The Safety Company

Ultima® X Series Gas Monitors

With a number of new and exciting features, **Ultima X Series Gas Monitors** are suitable for indoor and outdoor applications in virtually any type of industry including offshore, refineries, chemical and petrochemical facilities, steel mills, water and wastewater plants, mining, and general industry.

MSA's Ultima X Series Gas Monitors are microprocessor-based transmitters, engineered with the customer in mind.

Ultima X Series Gas Monitors, available in either stainless steel or polycarbonate enclosure housings, provide continuous monitoring of combustible and toxic gases, and oxygen deficiency. Installation is both simple and flexible. Ultima X Series Gas Monitors are suitable for indoor and outdoor applications in virtually any type of industry including offshore, refineries, chemical and petrochemical facilities, steel mills, water and wastewater plants, mining, and general industry.

MSA's Ultima X Series Gas Monitors, engineered using microprocessor-based technology and designed for varied gas detection needs, provide HART protocol. Ultima XIR and XI Gas Monitors offer DuraSource Technology, a new and improved light source providing extended sensor life.

HART Field Communications Protocol provides increased sensor data, part of cost-effective asset management. HART also provides convenient setup, calibration, and diagnostics. Calibrate, set up or perform diagnostics with HART from any point along the 4-20mA line. HART allows for existing component install and wiring to be used, reducing installation costs.

Installation and Operation

Installation is both simple and flexible. Ultima X Series Gas Monitors:

- Operate in diffusion mode, with factory-calibrated sensors ready to perform immediately after installation
- Offer HART upgrade of existing units via replacement PCBA
- Are available for remote sensing applications, where installations require the sensor to be separated from electronics
- Can operate completely stand-alone with a large LCD display, optional quick-check LEDs and four relay outputs (three alarm and one fault), or connected with a standard 4-20mA output to a control system (PLC, DCS, etc)
- Have an adjustable full-scale range
- Provide for easy installation with the two-piece, field-wiring connectors

Calibration

As with all gas monitors, Ultima X Series Gas Monitors must be calibrated periodically with the gas of interest to ensure proper operation. The calibration process offers:

- Automatic adjustments
- Date stamping
- Calibration instructions displayed on monitor
- Selectable lockout of output signal during calibration
- Ability to calibrate at the installation location or remotely without systems interruption
- Accessory calibrator, controller, or pushbutton for calibration initiation

ITEM 3

Ultima X³® Technology

[X to the Power of 3]

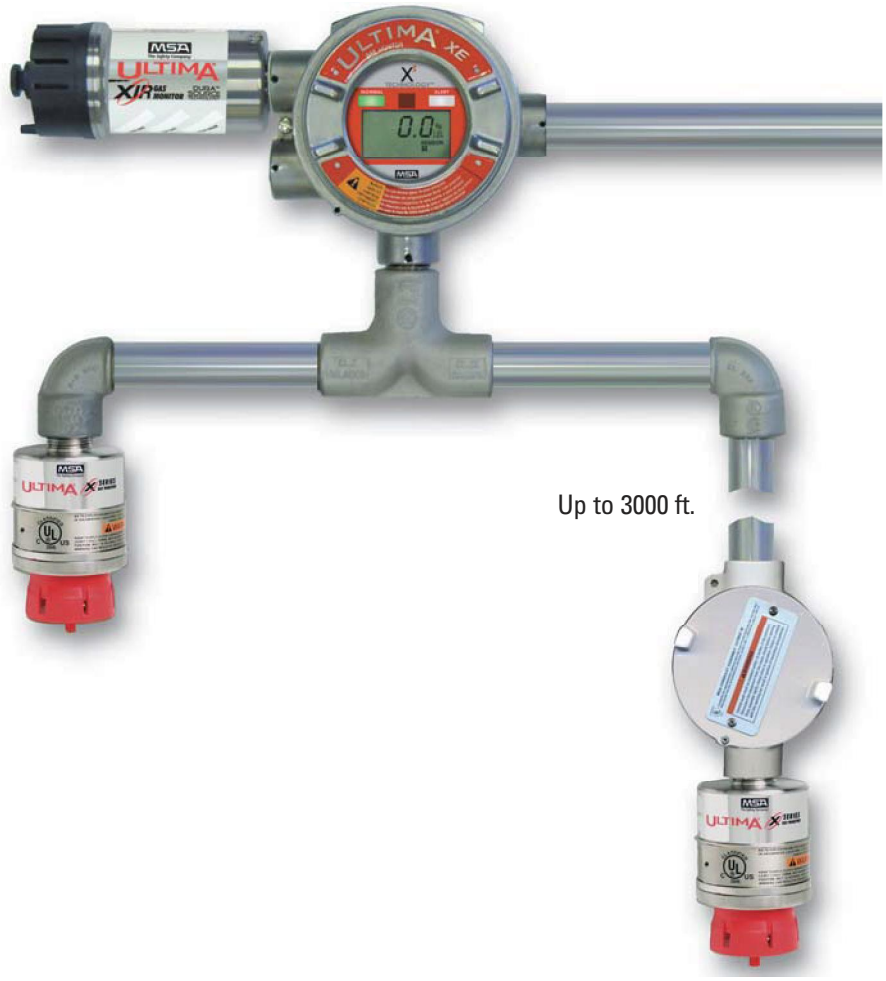

PLC/DCS [ProSoft-Tested]

Connect the X³ unit to PLC/DCS control systems. X³ technology is ProSoft-certified. It has been tested and found to be compatible with Allen-Bradley PLC/ModBUS connectivity by ProSoft Technology, Inc.

Ultima X³ Technology for Ultima X Series Gas Monitors features:

- **Multi-sensing**
  - Up to 31 monitors with up to 3 sensors inputted per monitor for 93-sensor total
  - Combination of electrochemical-, catalytic-, and infrared-type sensors is available
  - Scrolling display – monitor scrolls through type and reading for all attached sensors
  - Operation of monitor as network slave device
- **Signal boost**
  - Each sensor is remotely observable up-to 3000ft. from the monitor
  - Universal 85-256VAC or 8-30VDC power supply available at remote condulet
- **ModBUS RTU output**
  - Industry-standard format
  - RS-485 half-duplex communication interface
  - PLC/DCS systems integration

Accessories

Power Supply

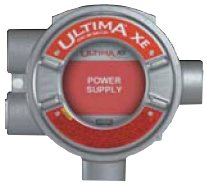

Ultima X Series external power supply can power sensors remotely; one remote power supply module can power:

- up to 5 electrochemical or oxygen sensors
- up to 3 combustible sensors
- internal power supply option also available

Pushbutton

Pushbutton feature lets users view various functions without calibrator:

- alarm acknowledge
- zero calibration initialization
- SPAN calibration initialization
- iCAL calibration initialization
- calibration abort

Duct-Mount Kit

Duct-mount Kit allows the user to monitor air within ductwork using the Ultima XE, XA or XIR sensor. Quick-disconnect fitting enables calibration gas to reach sensors without duct-mounted sensor removal.

Pump

Sampling pumps bring remote samples to sensors. Sampling modules are available in GP and XP versions of aspirated and pumped modules.

Calibrator

Ultima Monitor Calibrator offers the industry's simplest calibration method, a three-button device allowing Ultima X Series calibration and address changes.

Controller

Ultima Monitor Controller provides complete access to all features through its full-function keypad: alarm level set, span gas value changes, and last calibration date display.

HART Port

Intrinsically safe connection for a HART communicator.

MSA
The Safety Company

ITEM 3

Gases

- Acetylene IR- 0-2.5%
- Ammonia- 0-50 PPM
- Ammonia- 0-100 PPM
- Ammonia- 0-1000 PPM
- Arsine- 0-2 PPM
- Bromine- 0-5 PPM
- Carbon Dioxide IR- 0-0.5%
- Carbon Dioxide IR- 0-2%
- Carbon Dioxide IR- 0-5%
- Carbon Monoxide- 0-100 PPM
- Carbon Monoxide- 0-500 PPM
- Carbon Monoxide- 0-1000 PPM
- Chlorine- 0-5 PPM
- Chlorine- 0-10 PPM
- Chlorine- 0-20 PPM
- Chlorine Dioxide- 0-3 PPM
- IR Combustible Gas - Methane- 0-100% LEL
- IR Combustible Gas - Non-Methane- 0-100% LEL
- Combustible Gas- 0-100% LEL Natural Gas and H_2
- Combustible Gas- 0-100% LEL Petroleum Vapors
- Combustible Gas- 0-100% Solvents
- Diborane- 0-50 PPM
- Ethylene Oxide- 0-10 PPM
- Fluorine- 0-5 PPM
- Hydrogen Fluoride- 0-10 PPM
- Hydrogen- 0-1000 PPM
- Hydrogen Chloride- 0-50 PPM
- Hydrogen Cyanide- 0-50 PPM
- Hydrogen Sulfide- 0-10 PPM
- Hydrogen Sulfide- 0-50 PPM
- Hydrogen Sulfide- 0-100 PPM
- Hydrogen Sulfide- 0-500 PPM
- Nitric Oxide- 0-100 PPM
- Nitrogen Dioxide- 0-10 PPM
- Oxygen- 0-10% - compensated
- Oxygen- 0-25% - compensated
- Oxygen - CO_2 Tolerant- 0-25%
- Oxygen - Solvent Tolerant- 0-25%
- Phosgene- 0-1%
- Phosphine- 0-2 PPM
- Silane- 0-25 PPM
- Sulfur Dioxide- 0-25 PPM
- Sulfur Dioxide- 0-100 PPM

Specifications (for Ultima XE, Ultima XA and Ultima XIR)

Gas Types	XE, XA	Combustibles, oxygen and toxics
	XIR	Combustibles; 0-100%LEL
Temperature Range		-40°C to +60°C (-40°F to +140°F)
		(Typical-range for some gases may differ)
Drift		
Zero Drift	XE, XA	<5%/year, typical
	XIR	±2%/year, typical
Span Drift	XE, XA	<10%/year, typical
Noise		<1% Full Scale
Accuracy		
Repeatability	XE, XA, XIR	±1%Full Scale or 2ppm, typical
Linearity	XE, XA	±2%Full Scale or 2ppm, (O_2, CO)
	XIR	±2%Full Scale (≤50% LEL)
	XE, XA	±3%Full Scale (<50% LEL combustibles)
	XE, XA, XIR	±5%Full Scale (>50% LEL combustibles)
	XE, XA	±10%Full Scale or 2ppm, (non-CO toxics)
Response Times		
T20 O_2 & toxics	XE, XA	<12 seconds (typically 6 seconds)
T50 O_2 & toxics	XE, XA	<30 seconds (typically 12 seconds)
T50 combust.	XE, XA	<8 seconds
T90 combust.	XE, XA	<30 seconds
T90 combust.	XIR	<2 seconds
Humidity	XE, XA	15%-95% RH, non-condensing
	XIR	0%-95% RH, non-condensing
Sensor Life		
Oxygen & Toxics	XE, XA	2 years typical
Combust.	XE, XA	3 years typical
Combust.	XIR	10 years typical
Warranty		1 year XE, XA; 2 years XIR; 10 years XIR, XI (IR source only)
Power Input	XE, XA	7-30VDC (oxygen and toxics)
	XE, XA	7-30VDC @ 450mA maximum (combustibles)
	XIR	7-30VDC @ 750mA maximum (combustibles)
Wiring Requirements		
Combust.	XE, XA, XIR	3-wire
Oxygen & Toxics	XE, XA	2-wire; no LEDs or relays
Oxygen & Toxics	XE, XA	3-wire; LEDs and/or relays
Signal Output	XE, XA	4-20mA 2-wire current sink
	XE, XA, XIR	4-20mA 3-wire current source
Relay Contact Rating		5amp @ 220 VAC; 5amp @ 30 VDC
Housing Entries	XE, XIR	Four conduit entries, 3/4" NPT or 25mm
	XA	One entry
Physical	XE	316 Stainless Steel; 10.4lbs (4.7kg)
		6.3"W x 3.9"D x 10.3"L (160 x 99 x 261mm)
	XA	Polycarbonate; 1.5lbs (0.68kg)
		5.1"W x 2.9"D x 9.4"L (130 x 76 x 239mm)
	XIR	316 Stainless Steel; 10.8lbs (4.9kg)
		12.6"W x 3.9"D x 5.7"L (320 x 99 x 144mm)
Approval Ratings	Ultima X Series	**USA/Canada**
		$_c$FM$_{us}$, $_c$UL$_{us}$, CSA
		Class I, Div. 1 and 2, Groups A, B, C, D
		Class II, Div. 1, Groups F & G, Class III
		Type 4X, IP66
		ANSI/ISA 12.13.01
		CSA C22.2 No.152
		Class I, Div. 1, Groups A,B,C,D
		CSA C22.2 No. 152
		Class I, Div. 1, Groups B,C,D (XIR)
	XA	Nema 4X rating
	Ultima X Series	**Europe**
		CE Low Voltage/EMC/ATEX, EN 60079-1
		Ex 11 2G Ex d 11C T4
		IP 66
	Ultima X Series	**SIL Certification**
	(not including X3	SIL 2 @ HFT=0 (Oxygen, catalytic combustible and IR)
	Technology or Hart)	SIL 1 @ HFT = 0: SIL 2 @ HFT = 1 (Toxic)

Note: This Bulletin contains only a general description of the products shown. While uses and performance capabilities are described, under no circumstances shall the products be used by untrained or unqualified individuals and not until the product instructions including any warnings or cautions provided have been thoroughly read and understood. Only they contain the complete and detailed information concerning proper use and care of these products.

Corporate Headquarters
P.O. Box 426, Pittsburgh, PA
15230 USA
Phone 412-967-3000
www.MSAnet.com

U.S. Customer Service Center
Phone 1-800-MSA-INST
Fax 1-724-776-3280

MSA Canada
Phone 1-800-672-2222
Fax 1-800-967-0398

MSA Mexico
Phone 52-55 21 22 5770
Fax 52-55 5359 4330

MSA International
Phone 412-967-3354
FAX 412-967-3451

Offices and representatives worldwide
For further information:

ID 07-2051-MC / April 2009

© MSA 2008 Printed in U.S.A.

The Safety Company

ITEM 3

Mine Safety Appliances Company • P.O. Box 427 • Pittsburgh, PA 15230

Ultima X^3 Technology - ATO Order Form

A-Ultima X3	__	__	_	_	_	_	_	_	_	_	_	_	_	_	_	_	_	_
	1	2	3	4	5	6	7	8	9	10	11	12	13	14	15	16	17	18

1 Model Type
A = Nema 4X Plastic Enclosure
E = 316 Stainless Steel Enclosure
G = 316 Stainless Steel, General Purpose

2 Enclosure Type
0 = Plastic (North American Software)
* 1 = Stainless Steel, UL approved, NPT threads
● 2 = Stainless Steel, ATEX approved, metric threads
● 3 = Stainless Steel, ATEX approved, NPT threads
4 = Plastic, (European software)
* 5 = Stainless Steel, CSA approved, NPT threads
8 = Stainless Steel, FM Approved, NPT threads

3 Sensor Output
M = Modbus RTU

4 LED / Relay Option
0 = None
1 = LEDs and No Relays
2 = Relays and No LEDs
3 = LED's and Relays

5 Power Supply Options
0 = None
1 = Internal 85-256 VAC / 12 VDC
2 = Internal 85-256 VAC / 24 VDC
3 = External 85-256 VAC / 12 VDC
4 = External 85-256 VAC / 24 VDC

6 Language Option
0 = English

7 Hardware / Software Options
0 = None
1 = Push-button

Plastic	
Stainless Steel	

2 = PB w/ horn-reset

~ Plastic	
~ Stainless Steel	

3 = European Software

8 Signal Boost Option (US only)
0 = No
1 = Yes

9 Sensor 1 Selection
See Sensor Selection Table
32

10 Sensor 1 Accessories
0 = Integral or Remote w/no condulet
1 = Remote w/condulet, no signal boost no power supply
2 = Remote w/condulet, signal boost & 85-256 VAC supply
3 = Remote w/condulet, signal boost, & 7-30 VDC supply

11 Sensor 1 Installation Hardware
0 = None
1 = Mounting Kit (XE only)
2 = Duct Mount kit
3 = Nema 4X Installation kit (XA only)
4 = Mounting bracket with duct mount kit for XE
5 = Nema 4X installation kit w/mounting bracket and Duct Mount Kit for XA
6 = Duct Mount Kit, Metric only

12 Sensor 2 Selection
See Sensor Selection Table

XA	
XE	38
XIR	

13 Sensor 2 Accessories
0 = Integral or Remote w/no condulet
-- 1 = Remote w/condulet, no signal boost, no power supply
-- 2 = Remote w/condulet, signal boost & 85-256 VAC supply
-- 3 = Remote w/condulet, signal boost, & 7-30 VDC supply

14 Sensor 2 Installation Hardware
0 = None
1 = Mounting Kit (XE only)
2 = Duct Mount kit
3 = Nema 4X Installation kit (XA only)
4 = Mounting bracket with duct mount kit for XE
5 = Nema 4X installation kit w/mounting bracket and Duct Mount Kit for XA
6 = Duct Mount Kit, Metric only

15 Sensor 3 Selection
See Sensor Selection Table

XA	
XE	0
XIR	

16 Sensor 3 Accessories
0 = Integral or Remote w/no condulet
-- 1 = Remote w/condulet, no signal boost, no power supply
-- 2 = Remote w/condulet, signal boost & 85-256 VAC supply
-- 3 = Remote w/condulet, signal boost, & 7-30 VDC supply

Mine Safety Appliances Company • P.O. Box 427 • Pittsburgh, PA 15230

17 **Sensor 3 Installation Hardware**

0 = None
1 = Mounting Kit (XE only)
2 = Duct Mount kit
3 = Nema 4X Installation kit (XA only)
4 = Mounting bracket with duct mount kit for XE
5 = Nema 4X installation kit w/mounting bracket and Duct Mount Kit for XA
6 = Duct Mount Kit, Metric only

18 **Custom**

C = Custom
T = Tagging,SS
0 = NONE

Sensor Selection Table

0 None
11 Carbon Monoxide 0-100 PPM
12 Carbon Monoxide 0-500 PPM
13 Oxygen 0- 10%
14 Oxygen 0-25%
15 Hydrogen Sulfide 0-10 PPM
16 Hydrogen Sulfide 0-50 PPM
17 Hydrogen Sulfide 0-100 PPM
" ~ 18 Chlorine 0-5 PPM
19 Sulfur Dioxide 0-25 PPM
20 Nitric Oxide 0-100 PPM
21 Nitrogen Dioxide 0-10 PPM
22 Hydrogen Cyanide 0-50 PPM
" ~ 23 Hydrogen Chloride 0-50 PPM
" ~ 24 Chlorine Dioxide 0-3 PPM
25 Hydrogen Sulfide 0-500PPM
" ~ 26 Hydrogen Fluoride 0-10 PPM
27 Sulfur Dioxide 0-100PPM
" ~ 28 Chlorine 0-10 PPM
31 Combustible gas 0-100% LEL - Natural Gas & H_2
32 Combustible gas 0-100% LEL – Petroleum Vapors
33 Combustible gas 0-100% LEL – Solvents
} " ^ 34 Acetylene IR 0-2.5%
} " 35 Carbon Dioxide IR 0-0.5%
} " 36 Carbon Dioxide IR 0-2%
} " 37 Carbon Dioxide IR 0-5%
** 38 IR combustible 0-100% LEL- Methane
* 39 IR combustible 0-100% LEL – Propane
41 Phosphine 0-2 PPM
42 Arsine 0-2 PPM
43 Silane 0-25 PPM
44 Germane 0-3 PPM
" ~ 45 Diborane 0-50 PPM
" ~ 46 Bromine 0-5 PPM
" ~ 47 Flourine 0-10 PPM
" ~ 48 Ammonia 0–100 PPM
49 Hydrogen 0-1000 PPM
" ~ 50 Ethylene Oxide 0-10 PPM
51 Comb. Gas 0-100% LEL - ATEX - 4.4% CH4 Natural Gas and H2
52 Comb. Gas 0-100% LEL - ATEX - 1.7% Propane Petroleum Vapors
53 Comb. Gas 0-100% LEL - ATEX - 1.7% 1.7% Propane Solvents
"~ 54 Ammonia 0-1000 PPM
} " x 55 Solvent Tolerant O2
57 Carbon Monoxide 0-1000 PPM
58 Comb Gas IR – Methane 0-100% LEL – ATEX - 4.4% CH4
59 Comb Gas IR - Non Methane 0-100% LEL – ATEX 1.7% Propane
"~ 61 Chlorine 0-20 PPM
} " x 62 Solvent & CO2 Tolerant Oxygen
} " x 63 Low oxygen
} " x 64 Low solvent tolerant oxygen

SELECTION GUIDE FOR ULTIMA XIR COMBUSTIBLE

CATEGORY 38: Methane Calibration

	Controller Code	Cal Cylinder	Cylinder P/N	Cal Span Value
Methane	1	2.5% Methane	10028032	50% LEL

CATEGORY 39: Non-Methane Calibration

	Controller Code	Cal Cylinder	Cylinder P/N	Cal Span Value
Propane	2	0.6% Propane	10028034	29% LEL
Ethane	3	0.6% Propane	10028034	25% LEL
Butane	4	0.6% Propane	10028034	28% LEL
Pentane	5	0.6% Propane	10028034	33% LEL
Hexane	6	0.6% Propane	10028034	41% LEL
Cyclopentane	7	0.6% Propane	10028034	30% LEL
Ethylene	8	0.1% Propane	711054	28% LEL

For sensing multiple gases always calibrate for the least sensitive gas or vapor expected to be measured (highest response factor within category).

All other combustible gas span values available upon request.

Key:
+ UL approved, Class I, Div 1 & 2, Groups A, B, C, D; Class II, Div. 1, Groups E, F, G for IR, Groups F, G for E-chem and catalytic; Class III
> FM approved Class I, Div. 1 & 2, Groups A, B, C, D for oxygen, catalytic and IR
* CSA approved Class I, Div. 1, Groups A, B, C & D for E-chem and catalytic, Groups B, C & D for IR
** Selections 3 – 11 must be zero
● ATEX approved Ex d IIc T4, IP66
^ Available as custom product only
x XP Stainless Steel only
-- X^3IR must have condulet
~ Available with intrinsically safe barrier and ATEX approval or UL Div. 2 approval
" Not available as XL model
} Not available as XT model

Electraray® Hazardous Location Strobe Warning Light

Model 225XST and 225XST-I

Federal Signal's Electraray® Model 225XST hazardous location strobe light provides 80 high intensity flashes per minute. This warning light is available in 12-24VDC, 24VDC, 120VAC and 240VAC.

The Model 225XST has been certified by UL as meeting Type 4X water tight and corrosion resistant requirements; constructed to IP66 (in dome up orientation). This hazardous location warning light has a black polyurethane coated base and the inner fresnel lens is available in six colors (including magenta). The clear polycarbonate outer dome can be quickly removed for easy access to inspect the unit or change the lamp. The 225XST has an effective candela of 240 and a 580,000 peak candela.

The 24VDC 225XST-I features a voltage in-rush limiting PCB design that provides greater compatibility with factory automation control systems and less electrical interference with in-rush sensitive devices.

The 225XST is UL Listed and CSA Certified for Class I, Division 2, Groups A, B, C and D; Class II, Division 2, Groups F and G; and Class III.

Model 225XST is ideal for wet, corrosive atmospheres like those found in food processing industries, or anywhere a visual signa is needed.

Federal Signal's affordable Electraray Strobe Warning Light is specifically designed for use in hazardous locations or where corrosive materials are present.

DESIGNED FOR USE IN HAZARDOUS LOCATIONS

- 12-24VDC, 24VDC, 120VAC and 240VAC
- Six lens colors
- 5,000 hour, high-intensity strobe tube
- 1/2-inch NPT pipe mount
- Indoor/outdoor use
- Type 4X, IP66 enclosure (Dome up orientation)
- UL and cUL Listed and CSA Certified

Model	Voltage	Operating Current	Flash Rate/ Minute	Candela Peak[1]	Candela ECP[2]	Mount
225XST-012-024_*_	12-24VDC	1.70-0.70 amps	80	580,000	240	1/2" NPT Pipe
225XST-I-024_*_	24VDC	0.70 amps (2.0 amp In-rush)	80	580,000	240	1/2" NPT Pipe
225XST-120_*_	120VAC	0.25 amps	80	580,000	240	1/2" NPT Pipe
225XST-240_*_	240VAC	0.20 amps	80	580,000	240	1/2" NPT Pipe

** Indicates color: (A) Amber, (B) Blue, (C) Clear, (G) Green (M) Magenta or (R) Red*

Hazardous Location Rating:

T-Code at Maximum Ambient Temperature, °C	
Hazardous Location	**40°C**
Class I, Div 2, Groups A, B, C, D	T2A/280
Class II, Div 2, Groups F, G	T5/100
Class III	T5/100

[1] Peak candela is the maximum light intensity generated by a flashing light during its light pulse

[2] ECP (Effective Candela) is the intensity that would appear to an observer if the light were burning steadily

5 yr FEDERAL SIGNAL WARRANTY

ELECTRARAY® HAZARDOUS LOCATION WARNING LIGHT (225XST/225XST-I)

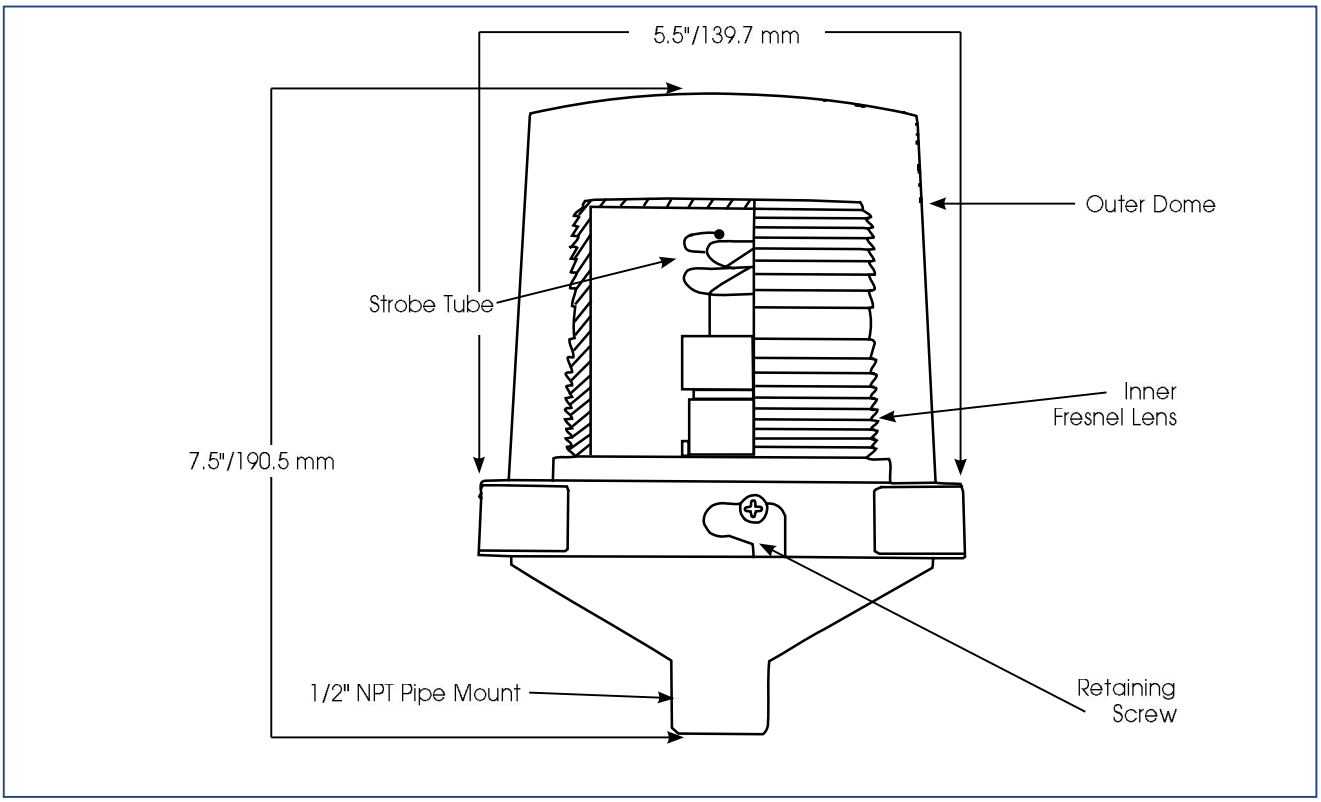

SPECIFICATIONS

Lamp Life:	10,000 Hours	10,000 Hours
Light Source:	Strobe tube	Strobe tube
Operating Temperature:	-40°F to 104°F	-40°C to 40°C
Net Weight:	1.5 lbs.	0.68 kg
Shipping Weight:	2.0 lbs.	0.9 kg
Height:	7.5"	190.5 mm
Diameter:	5.5"	139.7 mm

HOW TO ORDER

- Specify model, voltage and color
- Optional Accessories:
  Hazardous Wall Bracket (LHWB)
- Please refer to Model Number Index 225XST/225XST-I beginning on page 372

REPLACEMENT PARTS

Description	Part Number	Description	Part Number
Interior Lens		Exterior Dome, Clear	K8444D219C-04
Amber	K8550C095A-02	PC Assembly, 24VDC	K2001202C-01
Blue	K8550C095A-01	PC Assembly, 120VAC	K2001905A
Clear	K8550C095A	PC Assembly, 240VAC	K2001905A-01
Green	K8550C095A-04	Strobe Tube	K8107177A
Magenta	K8550C095A-07		
Red	K8550C095A-03		

FEDERAL SIGNAL CORPORATION

ITEM 7

Vibratone® Hazardous Location Horn

Model 350WBX

DIVISION 2 VIBRATING HORN

- Available in 120VAC and 240VAC
- Effective range of 200 feet
- Rated for Class I, Division 2; Class II, Division 2; Class III
- For coded or sustained tones
- Produces 100dBa @ 10' (110dBa @ 1m)
- Type 4X enclosure
- UL and cUL Listed and CSA Certified

Model 350WBX (AC current) Vibratone® horn produces sound by the electro-mechanical vibration of a stainless steel diaphragm. The horn mechanism with diaphragm is attached to the grille. The water- and dust-tight backbox is ideal for indoor or outdoor use.

The Model 350WBX is available in 120 or 240VAC for 50/60Hz. Its sound output level is 100dBa nominal at ten feet (110dBa @ 1 meter).

This hazardous location horn accommodates surface, flush or semi-flush mounting on walls, panels, and in cabinets.

The Model 350WBX features a die-cast zinc housing with a corrosion-resistant polyurethane finish. The rugged outer grille resists vandalism without reducing sound output. The 350WBX is fused and utilizes a terminal block connection. The 350WBX is approved for Class I, Division 2, Groups A, B, C and D; Class II, Division 2, Groups F and G; and Class III.

Capable of producing coded blasts or sustained tones, Federal Signal's Vibratone horns are excellent for general alarm, start/dismissal, coded paging and process control signaling in areas where their sound output exceeds ambient noise levels. Compact size and a variety of installation options make them ideal for institutional use.

Model	Voltage	Operating Current	Decibels @ 10'	Decibels @ 1m
350WBX-120	120VAC 50/60Hz	0.18 amps	100	110
350WBX-240	240VAC 50/60Hz	0.09 amps	100	110

5 yr FEDERAL SIGNAL WARRANTY

VIBRATONE® HORN (350WBX)

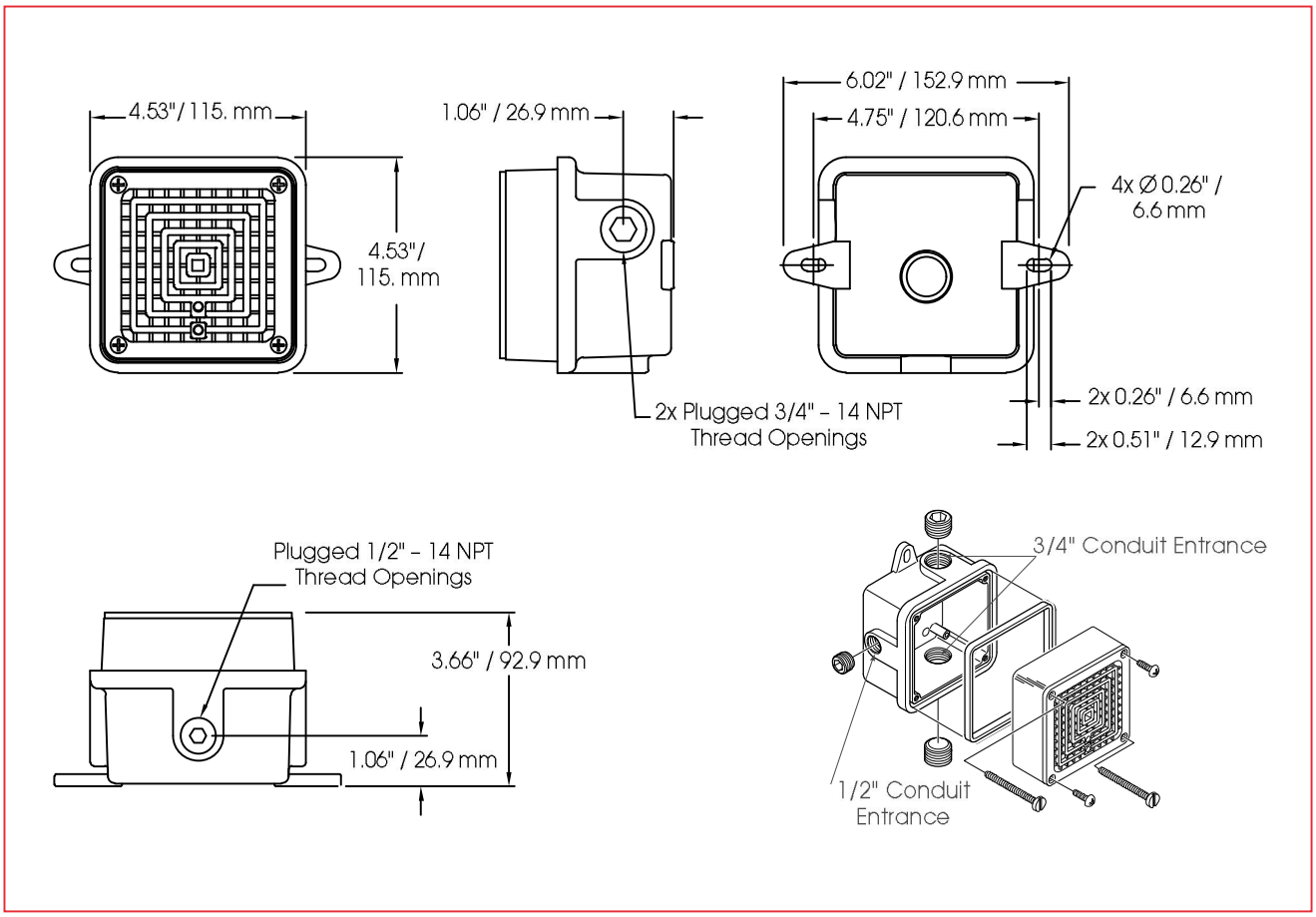

SPECIFICATIONS

Operating Temperature:	-65°F to 150°F	-54°C to 66°C
Net Weight:	2.7 lbs.	1.2 kg
Shipping Weight:	2.8 lbs.	1.2 kg
Height:	4.53"	115.0 mm
Width:	6.02"	152.0 mm
Depth:	3.66"	92.9 mm

REPLACEMENT PARTS

Description	***Part Number***
Coil (120VAC only)	KFC1516C
Volume Control Kit	K8435663B
Fuse, 1 amp, 250V	K148A155A-01

HOW TO ORDER

- Specify model and voltage
- Please refer to Model Number Index 350WBX beginning on page 374

New!

RXM Zelio plug-in relays and sockets provide a comprehensive selection of relays responding to the most demanding standards ranging from 3A to 12A. Some of the features include:

- Spring return test button for testing the contacts (standard)
- Green LED indication of relay status (depending on version)
- Mechanical indication of relay status (standard)
- Plug-in protection module to protect against electrical spikes
- Plug-in jumper bars for coil terminals to avoid time-consuming wiring

RXM●AGB2F7

Table 23.18: Miniature relays without LED (sold in lots of 10)

	Number and type of contacts - Thermal current (Ith)					
	2 C/O -12 A Res.		3 C/O - 10 A Res.		4 C/O - 6 A Res.	
Coil Voltage	Catalog Number	$ Price ea.	Catalog Number	$ Price ea.	Catalog Number	$ Price ea.
12 Vdc	RXM2AB1JD	4.20	RXM3AB1JD	4.50	RXM4AB1JD	4.70
24 Vdc	RXM2AB1BD	4.20	RXM3AB1BD	4.50	RXM4AB1BD	4.70
48 Vdc	RXM2AB1ED	4.20	RXM3AB1ED	4.50	RXM4AB1ED	4.70
110 Vdc	RXM2AB1FD	4.20	RXM3AB1FD	4.50	RXM4AB1FD	4.70
220 Vdc	—	—	—	—	RXM4AB1MD	4.70
24 Vac	RXM2AB1B7	4.20	RXM3AB1B7	4.50	RXM4AB1B7	4.70
48 Vac	RXM2AB1E7	4.20	RXM3AB1E7	4.50	RXM4AB1E7	4.70
120 Vac	RXM2AB1F7	4.20	RXM3AB1F7	4.50	RXM4AB1F7	4.70
230 Vac	RXM2AB1P7	4.20	RXM3AB1P7	4.50	RXM4AB1P7	4.70
240 Vac	—	—	—	—	RXM4AB1U7	4.70

Table 23.19: Miniature relays with LED (sold in lots of 10)

	Number and type of contacts - Thermal current (Ith)					
	2 C/O -12 A Res.		3 C/O - 10 A Res.		4 C/O - 6 A Res.	
Coil Voltage	Catalog Number	$ Price ea.	Catalog Number	$ Price ea.	Catalog Number	$ Price ea.
12 Vdc	RXM2AB2JD	4.90	RXM3AB2JD	5.20	RXM4AB2JD	5.40
24 Vdc	RXM2AB2BD	4.90	RXM3AB2BD	5.20	RXM4AB2BD	5.40
48 Vdc	RXM2AB2ED	4.90	RXM3AB2ED	5.20	RXM4AB2ED	5.40
110 Vdc	RXM2AB2FD	4.90	RXM3AB2FD	5.20	RXM4AB2FD	5.40
125 Vdc	—	—	—	—	RXM4AB2GD	5.40
24 Vac	RXM2AB2B7	4.90	RXM3AB2B7	5.20	RXM4AB2B7	5.40
48 Vac	RXM2AB2E7	4.90	RXM3AB2E7	5.20	RXM4AB2E7	5.40
120 Vac	RXM2AB2F7	4.90	RXM3AB2F7	5.20	RXM4AB2F7	5.40
230 Vac	RXM2AB2P7	4.90	RXM3AB2P7	5.20	RXM4AB2P7	5.40

Table 23.20: Miniature relays with LED without Push Button (sold in lots of 10)

	Number and type of contacts - Thermal current (Ith)					
	2 C/O -12 A Res.		3 C/O - 10 A Res.		4 C/O - 6 A Res.	
Coil Voltage	Catalog Number	$ Price ea.	Catalog Number	$ Price ea.	Catalog Number	$ Price ea.
12 Vdc	RXM2AB3JD	4.56	—	—	RXM4AB3JD	5.02
24 Vdc	RXM2AB3BD	4.56	—	—	RXM4AB3BD	5.02
48 Vdc	RXM2AB3ED	4.56	—	—	RXM4AB3ED	5.02
110 Vdc	RXM2AB3FD	4.56	—	—	RXM4AB3FD	5.02
125 Vdc	—	—	—	—	RXM4AB3GD	5.02
24 Vac	RXM2AB3B7	4.56	—	—	RXM4AB3B7	5.02
48 Vac	RXM2AB3E7	4.56	—	—	RXM4AB3E7	5.02
120 Vac	RXM2AB3F7	4.56	—	—	RXM4AB3F7	5.02
230 Vac	RXM2AB3P7	4.56	—	—	RXM4AB3P7	5.02

Table 23.21: Miniature relays with low level contacts, without LED (sold in lots of 10)

Number and type of contacts - Thermal current (Ith)		
4 C/O -3 A Res.		
Coil Voltage	Catalog Number	$ Price ea.
12 Vdc	RXM4GB1JD	4.70
24 Vdc	RXM4GB1BD	4.70
48 Vdc	RXM4GB1ED	4.70
110 Vdc	RXM4GB1FD	4.70
24 Vac	RXM4GB1B7	4.70
48 Vac	RXM4GB1E7	4.70
120 Vac	RXM4GB1F7	4.70
230 Vac	RXM4GB1P7	4.70

RXM4GB2F7

Table 23.22: Miniature relays with low level contacts, with LED (sold in lots of 10)

Number and type of contacts - Thermal current (Ith)		
4 C/O -3 A Res.		
Coil Voltage	Catalog Number	$ Price ea.
12 Vdc	RXM4GB2JD	5.40
24 Vdc	RXM4GB2BD	5.40
48 Vdc	RXM4GB2ED	5.40
110 Vdc	RXM4GB2FD	5.40
24 Vac	RXM4GB2B7	5.40
48 Vac	RXM4GB2E7	5.40
120 Vac	RXM4GB2F7	5.40
230 Vac	RXM4GB2P7	5.40
240 Vac	RXM4GB2U7	5.40

Table 23.23: Miniature relays with low level contacts, with LED without Push Button (sold in lots of 10)

Number and type of contacts - Thermal current (Ith)		
4 C/O -3 A Res.		
Coil Voltage	Catalog Number	$ Price ea.
12 Vdc	RXM4GB3JD	5.02
24 Vdc	RXM4GB3BD	5.02
48 Vdc	RXM4GB3ED	5.02
110 Vdc	RXM4GB3FD	5.02
125 Vdc	—	—
24 Vac	RXM4GB3B7	5.02
48 Vac	RXM4GB3E7	5.02
120 Vac	RXM4GB3F7	5.02
230 Vac	RXM4GB3P7	5.02

Approvals for Relays:

File CCN ▲ E164862 NLDX, NLDX7 — File CCN E164862 NLDX2, NLDX8 — File 230765 Class 3211 07 — RoHS Compliant

▲ When used with the appropriate socket.

For sockets and accessories, see page 23-7

© 2007 Schneider Electric
All Rights Reserved

RXZE2M114M with Relay RXM4AB2P7TQ

Table 23.24: Miniature relays (sold in lots of 100)

	Number and type of contacts - Thermal current (Ith)			
	2 C/O - 12 A Res.		4 C/O - 6 A Res.	
Coil Voltage	**Catalog Number**	**$ Price ea.**	**Catalog Number**	**$ Price ea.**
Without LED				
12 Vdc	—	—	RXM4AB1JDTQ	**4.70**
24 Vdc	RXM2AB1BDTQ	**4.20**	RXM4AB1BDTQ	**4.70**
48 Vdc	—	—	RXM4AB1EDTQ	**4.70**
110 Vdc	—	—	RXM4AB1FDTQ	**4.70**
220 Vdc	—	—	RXM4AB1MDTQ	**5.00**
24 Vac	RXM2AB1B7TQ	**4.20**	RXM4AB1B7TQ	**4.70**
48 Vac	—	—	RXM4AB1E7TQ	**4.70**
120 Vac	RXM2AB1F7TQ	**4.20**	RXM4AB1F7TQ	**4.70**
230 Vac	RXM2AB1P7TQ	**4.20**	RXM4AB1P7TQ	**4.70**
With LED				
24 Vdc	—	—	RXM4AB2BDTQ	**5.40**
24 Vac	RXM2AB2B7TQ	**4.90**	RXM4AB2B7TQ	**5.40**
230 Vac	RXM2AB2P7TQ	**4.90**	RXM4AB2P7TQ	**5.40**

Table 23.25: Miniature relays with LED without Push Button (sold in lots of 100)

	Number and type of contacts - Thermal current (Ith)			
	2 C/O - 12 A Res.		4 C/O - 6 A Res.	
Coil Voltage	**Catalog Number**	**$ Price ea.**	**Catalog Number**	**$ Price ea.**
24 Vdc	RXM2AB3BDTQ	**4.56**	RXM4AB3BDTQ	**5.02**
24 Vac	RXM2AB3B7TQ	**4.56**	RXM4AB3B7TQ	**5.02**
230 Vac	RXM2AB3P7TQ	**4.56**	RXM4AB3P7TQ	**5.02**

RXZE2S114M with relay RXM4AB2F7TQ

Table 23.26: Sockets (sold in lots of 10)

Contact terminal arrangement	Connection	Relay type	Catalog Number	$ Price ea.
Mixed	Screw clamp terminals	RXM2•••••▲ RXM4•••••▲	RXZE2M114■	**3.90**
	Box lug connector	RXM2••••• RXM4•••••	RXZE2M114M■	**3.90**
Separate	Box lug connector	RXM2•••••	RXZE2S108M♦	**3.90**
		RXM3•••••	RXZE2S111M■	**3.90**
		RXM4•••••	RXZE2S114M■	**3.90**

▲ When mounting relay RXM2••••• on socket RXZE2M••••, the thermal current must not exceed 10 A.
■ Thermal current Ith: 10 A
♦ Thermal current Ith: 12 A

Table 23.27: Protection modules (sold in lots of 20)

Description	Voltage	For use with	Catalog Number	$ Price ea.
Diode	6–250 Vdc	All sockets	RXM040W	**1.50**
RC circuit	24–60 Vac	All sockets	RXM041BN7	**1.50**
	110–240 Vac	All sockets	RXM041FU7	**1.70**
Varistor	6–24 Vac/Vdc	All sockets	RXM021RB	**1.50**
	24–60 Vac/Vdc	All sockets	RXM021BN	**1.50**
	110–240 Vac/Vdc	All sockets	RXM021FP	**1.50**

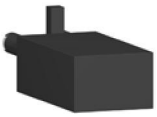

RXM041••7

RXZ400

Table 23.28: Accessories (sold in lots of 10)

Description	For use with	Catalog Number	$ Price ea.
Metal hold-down clip	All sockets	RXZ400	**.38**
Plastic hold-down clip	All sockets	RXZR335	**.38**
Bus jumper, 2-pole (Ith: 5 A)	All sockets with separate contacts	RXZS2	**.56**
Mounting adapter for DIN rail	All relays	RXZE2DA	**.56**
Mounting adapter for mounting directly to a panel	All relays	RXZE2FA	**.38**
Clip-in markers	All relays (sheet of 108 markers)	RXZL520	**.03**
	All sockets except RXZE2M114	RXZL420	**.03**

Approvals for Sockets:

File CCN E172326 SWIV2, SWIV8

File 230765 Class 3211 07

RoHS Compliant

© 2007 Schneider Electric
All Rights Reserved

Extract from the online catalog

MINI-PS-100-240AC/24DC/4

Order No.: 2938837

http://catalog.phoenixcontact.net/phoenix/treeViewClick.do?UID=2938837

DIN rail power supply unit 24 V DC/4 A, primary-switched mode, slim design

Commercial data	
EAN	4 017918 924058
Pack	1 Pcs.
Customs tariff	85044082
Product key	CMPM13
Catalog page information	Page 597 (IF-2011)

Product notes

WEEE/RoHS-compliant since: 07/10/2006

http://www.download.phoenixcontact.com Please note that the data given here has been taken from the online catalog. For comprehensive information and data, please refer to the user documentation. The General Terms and Conditions of Use apply to Internet downloads.

Product description

MINI POWER is the extremely slim power supply unit with constructional widths of 22.5 mm, 45 mm and 67.5 mm.

In addition to a 24 V version with output currents of 1.3 A, 2 A and 4 A, special voltages with 5 V/3 A and ±15 V/1 A and 10 V...15 V/2 A and 8 A are also available.

A reliable starting of complex loads is ensured by a power reserve of up to 100% – the POWER BOOST.

Extract from the online catalog

UT 4

Order No.: 3044102

http://eshop.phoenixcontact.de/phoenix/treeViewClick.do?UID=3044102

Universal terminal block with screw connection, cross section: 0,14 - 4 mm², AWG: 26 - 10, width: 6.2 mm, color: Gray

Commercial data	
EAN	4017918960391
Pack	50 Pcs.
Customs tariff	85369010
Weight/Piece	0.009424 KG
Catalog page information	Page 27 (CL-2007)

Product notes

WEEE/RoHS-compliant since: 01/01/2003

http:// www.download.phoenixcontact.com Please note that the data given here has been taken from the online catalog. For comprehensive information and data, please refer to the user documentation. The General Terms and Conditions of Use apply to Internet downloads.

Technical data

General

Number of levels	1
Number of connections	2
Color	gray

Insulating material	PA
Inflammability class acc. to UL 94	V0

Dimensions

Width	6.2 mm
Length	47.7 mm
Height NS 35/7,5	47.5 mm
Height NS 35/15	55 mm

Technical data

Maximum load current	41 A (with 6 mm^2 conductor cross section)
Rated surge voltage	8 kV
Pollution degree	3
Surge voltage category	III
Insulating material group	I
Connection in acc. with standard	IEC 60947-7-1
Nominal current I_N	32 A (with 4 mm^2 conductor cross section)
Nominal voltage U_N	1000 V
Open side panel	ja

Connection data

Conductor cross section solid min.	0.14 mm^2
Conductor cross section solid max.	6 mm^2
Conductor cross section stranded min.	0.14 mm^2
Conductor cross section stranded max.	6 mm^2
Conductor cross section AWG/kcmil min.	26
Conductor cross section AWG/kcmil max	10
Conductor cross section stranded, with ferrule without plastic sleeve min.	0.25 mm^2
Conductor cross section stranded, with ferrule without plastic sleeve max.	4 mm^2
Conductor cross section stranded, with ferrule with plastic sleeve min.	0.25 mm^2
Conductor cross section stranded, with ferrule with plastic sleeve max.	4 mm^2
2 conductors with same cross section, solid min.	0.14 mm^2
2 conductors with same cross section, solid max.	1.5 mm^2

2 conductors with same cross section, stranded min.	0.14 mm^2
2 conductors with same cross section, stranded max.	1.5 mm^2
2 conductors with same cross section, stranded, TWIN ferrules with plastic sleeve, min.	0.5 mm^2
2 conductors with same cross section, stranded, TWIN ferrules with plastic sleeve, max.	2.5 mm^2
2 conductors with same cross section, stranded, ferrules without plastic sleeve, min.	0.25 mm^2
2 conductors with same cross section, stranded, ferrules without plastic sleeve, max.	1.5 mm^2
Type of connection	Screw connection
Stripping length	9 mm
Internal cylindrical gage	A4
Screw thread	M 3
Tightening torque, min	0.6 Nm
Tightening torque max	0.8 Nm

Certificates / Approvals

Approval logo

CSA

Nominal voltage U_N	600 V
Nominal current I_N	30 A
AWG/kcmil	26-10

CUL

Nominal voltage U_N	600 V
Nominal current I_N	30 A
AWG/kcmil	26-10

UL

Nominal voltage U_N	600 V
Nominal current I_N	30 A
AWG/kcmil	26-10

Certification	CB, CSA, CUL, DNV, GL, LR, UL, VDE-PZI

requested approbations

Certification Ex:	IECEx, KEMA-EX

Accessories

Item	Designation	Description
Assembly		
3047167	ATP-UT	Partition plate, for visual and electrical separation of terminal groups, width: 2 mm, color: gray
3047028	D-UT 2,5/10	Cover, for terminal block UT and UT...-PE, width 2.2 mm, color: Gray
0801762	NS 35/ 7,5 CU UNPERF 2000MM	DIN rail, material: Copper, unperforated, height 7.5 mm, width 35 mm, length: 2 m
1207640	NS 35/ 7,5 PERF 755MM	NS 35 DIN rail, height 7.5 mm, length 755 mm
1207653	NS 35/ 7,5 PERF 955MM	NS35 DIN rail, height 7.5 mm, length 955 mm
1207666	NS 35/ 7,5 PERF 1155MM	NS 35 DIN rail, height 7.5 mm, length 1155 mm
0801733	NS 35/ 7,5 PERF 2000MM	DIN rail, material: Steel, perforated, height 7.5 mm, width 35 mm, length: 2 m
0801681	NS 35/ 7,5 UNPERF 2000MM	DIN rail, material: Steel, unperforated, height 7.5 mm, width 35 mm, length: 2 m
1201756	NS 35/15 AL UNPERF 2000MM	DIN rail, deep-drawn, high profile, unperforated, 1.5 mm thick, material: Aluminum, height 15 mm, width 35 mm, length 2 m
1201895	NS 35/15 CU UNPERF 2000MM	DIN rail, material: Copper, unperforated, 1.5 mm thick, height 15 mm, width 35 mm, length: 2 m
1207679	NS 35/15 PERF 755MM	NS 35 DIN rail, height 15 mm, length 755 mm
1207682	NS 35/15 PERF 955MM	NS 35 DIN rail, height 15 mm, length 955 mm
1207695	NS 35/15 PERF 1155MM	NS 35 DIN rail, height 15 mm, length 1155 mm
1201730	NS 35/15 PERF 2000MM	DIN rail, material: Steel, perforated, height 15 mm, width 35 mm, length: 2 m
1201714	NS 35/15 UNPERF 2000MM	DIN rail, material: Steel, unperforated, height 15 mm, width 35 mm, length: 2 m
1201798	NS 35/15-2,3 UNPERF 2000MM	DIN rail, material: Steel, unperforated, 2.3 mm thick, height 15 mm, width 35 mm, length: 2 m
Bridges		
3030336	FBS 2-6	Plug-in bridge for cross-connections in the terminal center, 2-pos., color: Red
3030242	FBS 3-6	Plug-in bridge for cross-connections in the terminal center, 3-pos., color: Red

ITEM 311

Extract from the online catalog

UT 4-PE

Order No.: 3044128

http://eshop.phoenixcontact.de/phoenix/treeViewClick.do?UID=3044128

Universal ground terminal block, Type of connection: Screw connection, Screw connection, Cross section: 0.14 mm² - 6 mm², AWG 26 - 10, Width: 6.2 mm, Color: green-yellow, Mounting type: NS 35/7,5, NS 35/15

Commercial data	
EAN	4017918960407
Pack	50 pcs.
Customs tariff	85369010
Weight/Piece	0.01325 KG
Catalog page information	Page 33 (CL-2007)

Product notes

WEEE/RoHS-compliant since: 01/01/2003

http://www.download.phoenixcontact.com Please note that the data given here has been taken from the online catalog. For comprehensive information and data, please refer to the user documentation. The General Terms and Conditions of Use apply to Internet downloads.

Technical data

General

Number of levels	1
Number of connections	2
Color	green-yellow

ITEMS 320, 323

217 Series, 5 x 20 mm, Fast-acting Fuse

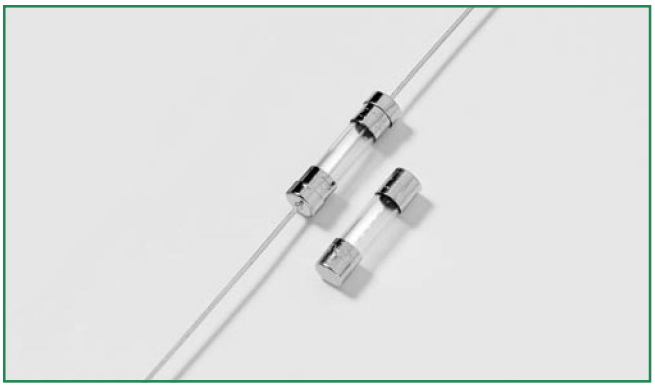

Agency Approvals

Agency	Agency File Number	Ampere Range
	Cartridge Certificates: NBK120802-E10480 A&C Leaded Certificates: NBK120802-E10480 B&D	1A – 5A 6.3A – 15A 1A – 5A 6.3A – 15A
	Certificates: 2002010207007600 2002010207007599	32mA – 800mA 1A – 6.3A
	Certificates: SU05001-3004 SU05001-2005 SU05001-2006 SU05001-2007	32mA – 40mA 50mA – 315mA 400mA – 6.3A 8A & 10A
	E10480 JDYX2	32mA – 6.3A
	File: 029862 Acc. Class: LR1422-30	
	License: KM41462	400mA – 6.3A
	File: 9848103, 9931059 304518 & 304555	32mA – 6.3A
	License: 40014645	32mA – 6.3A, 8A*, 10A*
	License: 40016647	15A*
		32mA – 15A

*Approval for cartridge versions only

Description

5x20mm fast-acting glass body cartridge fuse designed to IEC specification.

Features

- Designed to International (IEC) Standards for use globally
- Meets the IEC 60127-2, Sheet 2 specification for fast-acting fuses
- Available in cartridge and axial lead form
- RoHS compliant and lead-free

Applications

Used as supplementary protection in appliance or utilization equipment to provide individual protection for components or internal circuits.

Electrical Characteristics for Series

% of Ampere Rating	Ampere Rating	Opening Time
150%	32mA–100mA	60 minutes, Minimum
	125mA-6.3A	60 minutes, Minimum
	8A-15A	30 minutes, Minimum
210%	32mA-100mA	30 minutes, Maximum
	125mA-6.3A	30 minutes, Maximum
	8A-15A	30 minutes, Maximum
275%	32mA-100mA	0.01 sec., Min.; .5 sec. Max.
	125mA-6.3A	0.05 sec., Min.; 2 sec. Max.
	8A-15A	0.05 sec., Min.; 2 sec. Max.
400%	32mA-100mA	.003 sec., Min.; 0.1 sec.. Max.
	125mA-6.3A	.01 sec., Min.; 0.3 sec. Max.
	8A-15A	.01 sec., Min.; 0.4 sec. Max.
1000%	32mA-100mA	.02 second, Maximum
	125mA-6.3A	.02 second, Maximum
	8A-15A	.04 second, Maximum

© 2009 Littelfuse, Inc.
Specifications are subject to change without notice.
Please refer to www.littelfuse.com/series/217.html for current information.

Bulletin 1492

IEC Terminal Blocks

Fuse Blocks

	1492-WFB4			1492-WFB424			1492-WFB4250		
Dimensions are not intended to be used for manufacturing purposes. **Note:** Height dimension is measured from top of rail to top of terminal block.	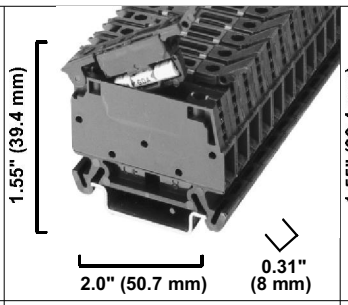			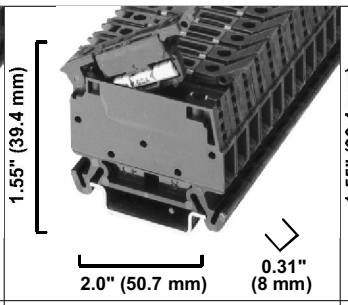			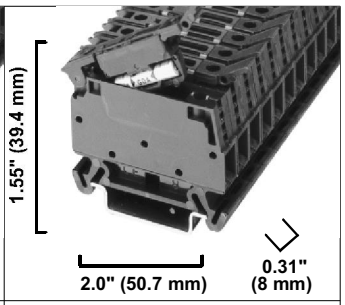		
Specifications	*Single-circuit fuse block.*			*Single-circuit fuse block with LED blown fuse indicator.*			*Single-circuit fuse block with neon blown fuse indicator.*		
Approvals	UL	CSA	IEC	UL	CSA	IEC	UL	CSA	IEC
Voltage Rating	300V AC/DC	300V AC/DC	500V AC/DC	300V AC/DC	300V AC/DC	500V AC/DC	300V AC/DC	300V AC/DC	500V AC/DC
Maximum Current	15 A	15 A	15 A ❶	15 A	15 A	15 A ❶	15 A	15 A	15 A ❶
Wire Range (Rated Cross Section)	#22…#12 AWG	#22…#12 AWG	0.5…4 mm²	#22…#12 AWG	#22…#12 AWG	0.5…4 mm²	#22…#12 AWG	#22…#12 AWG	0.5…4 mm²
Indicator Type	Non-Indicating			LED			Neon		
Leakage Current	—			2mA @ 24V			1mA @ 264V		
Working Voltage	Per Fuse Rating			10-57V AC/DC			85-264V AC		
Fuse Size (Not Supplied)	5 x 20 mm			5 x 20 mm			5 x 20 mm		
Wire Strip Length	0.31" (8 mm)			0.31" (8 mm)			0.31" (8 mm)		
Recommended Tightening Torque	5.0…5.6 lb-in. (0.6 Nm)			5.0…5.6 lb-in. (0.6 Nm)			5.0…5.6 lb-in. (0.6 Nm)		
Density	38 pcs./ft (125/m)			38 pcs./ft (125/m)			38 pcs./ft (125/m)		
Insulation Temperature Range	–40…+195°F (–40…+90°C)			–40…+195°F (–40…+90°C)			–40…+195°F (–40…+90°C)		
Terminal Blocks	**Cat. No.**		**Pcs./ Pkg.**	**Cat. No.**		**Pcs./ Pkg.**	**Cat. No.**		**Pcs./ Pkg.**
Terminal Block	1492-WFB4		50	1492-WFB424		50	1492-WFB4250		50
Accessories (page 12-172)	**Cat. No.**		**Pcs./ Pkg.**	**Cat. No.**		**Pcs./ Pkg.**	**Cat. No.**		**Pcs./ Pkg.**
Mounting Rails: 1 m Symmetrical DIN (Steel)	199-DR1		5	199-DR1		5	199-DR1		5
1 m Symmetrical DIN (Aluminum)	1492-DR5		5	1492-DR5		5	1492-DR5		5
1 m Hi-Rise Sym. DIN (Aluminum)	1492-DR6		2	1492-DR6		2	1492-DR6		2
1 m Angled Hi-Rise Sym. DIN (Steel)	1492-DR7		2	1492-DR7		2	1492-DR7		2
End Barrier	Not Required		—	Not Required		—	Not Required		—
End Anchors: DIN Rail — Normal Duty	1492-EA35		50	1492-EA35		50	1492-EA35		50
DIN Rail — Heavy Duty	1492-EAH35		10	1492-EAH35		10	1492-EAH35		10
Jumpers: Side Jumper — 10-pole Insulated	1492-SJFB8-10		10	1492-SJFB8-10		10	1492-SJFB8-10		10
Other Accessories: Partition Plate	1492-PPSL3		50	1492-PPSL3		50	1492-PPSL3		50
Group Marking Carrier	1492-GM35		10	1492-GM35		10	1492-GM35		10
Marking Systems: Snap-in Marker Card — For Base Block	1492-SM8X12		5	1492-SM8X12		5	1492-SM8X12		5
For Handle	1492-SM6X9		5	1492-SM6X9		5	1492-SM6X9		5
Individual Marker Tabs (single char.)	1492-MP ❷		10	1492-MP ❷		10	1492-MP ❷		10

❶ IEC standards for 5 x 20 mm fuses do not include ratings above 6.3 A.
❷ Cat. no. is not complete. See page 12-173.

Accessories — Page 12-172

PRODUCT DATASHEET
SL/SLX-5/8/9ES-1/2/3

Sixnet

UNMANAGED INDUSTRIAL ETHERNET SWITCHES

The SL/SLX-5ES and SL/SLX-8/9ES are 5 and 8/9 port industrial Ethernet switches that provide advanced performance that enables you to achieve real-time deterministic operation. These ruggedized switches are industrial hardened to provide superior reliability. They require no user setup and immediately start operating as soon as you power them up. Sixnet switches are designed to make your job easier, ensuring your system will keep running for many years to come.

PRODUCT HIGHLIGHTS

- Slim packaging fits on your DIN rail
- High performance and value
- Truly industrial hardened design
- Plug & play saves you time and money

REAL-TIME ETHERNET PERFORMANCE

- Fast wire-speed switching
- Intelligent message routing - No collisions!
- Ideal for any system

PLUG & PLAY SIMPLICITY

- Auto-sensing for speed and duplex
- Auto-mdi/mdix-crossover works with straight or crossed cables
- Auto-polarity corrects for crossed signals

TROUBLE FREE OPERATION

- Ultra-reliable 1,000,000+ hours MTBF
- Dual power inputs with industrial spike protection
- DIN rail or direct panel mounting
- UL/CSA (CUL), CE, hazardous locations (Zone 2) and maritime rated
- -40 to 85°C operating range (SLX models)

Sixnet Knows Industrial

We have been designing industrial hardware such as Remote Terminal Units for over 30 years and have used this expertise to design the toughest Ethernet switches on the market. Don't trust your critical communications to so-called industrial hardware from commercial switch manufacturers. Sixnet switches give you proven assurance that your system will keep running for years to come.

SL Model

SLX Model

ITEM 509

UNMANAGED INDUSTRIAL ETHERNET SWITCHES SPECIFICATIONS SL/SLX-5/8/9ES-1/2/3

ETHERNET PERFORMANCE

- Unmanaged with 5, 8 or 9 Ethernet ports
- Store & forward wire-speed switching
- Automatic address learning, aging and migration
- Full duplex operation with flow control (no collisions)
- All IEEE 802.3 Ethernet protocols supported
- 1024 MAC addresses supported
- Memory bandwidth 3.2 Gbps
- Typical latency (varies on load)
  - @ 100 Mbps: 5 µs + frame time
  - @ 10 Mbps: 16 µs + frame time
- Ethernet isolation 1500 VRMS 1 minute

ETHERNET PORTS

- Shielded RJ45 ports for 10/100BaseTX
  - Auto-negotiation for 10 or 100 Mbps
  - Auto- MDI/MDIX-crossover for either cable type
  - Auto-polarity corrects for crossed +/- signals
- Fiber optic port speed 100BaseFX (100 Mbps)
- Fiber duplex operation: Full duplex
- Fiber wavelength: 1300 nm center (typical)
- Fiber max. distance (full duplex) (see web for details)
  - 4 km for multimode 50 or 62.5/125 µm (SC or ST)
  - 20 km for singlemode 9 or 10/125 µm (SC or ST)
  - 40 km (long haul) or more (contact Sixnet)

ETHERNET COMPLIANCE

- IEEE 802.3 (10Mbps Ethernet supports legacy devices)
- IEEE 802.3u (Fast Ethernet 100Mbps for newer devices)
- IEEE 802.3x (Full-Duplex with Flow Control)

POWER INPUT

- Power input voltage: 10-30 VDC
- Redundant input terminals
- Input power (typical - all ports active at 100 Mbps)
  - 2.0 W (5-port without fiber)
  - 3.0 W (5-port including 1 fiber)
  - 4.0 W (8-port without fiber)
  - 5.0 W (9-port including 1 fiber)
- Transient protection: 15,000 watts peak
- Spike protection: 5,000 watts (10 times for 10 uS)

ENVIRONMENTAL

- Operating temperature
  - SL -5ES models: -10 to +60°C
  - SL -6/8/9 ES models: -40 to +60°C
  - SLX models: -40 to +85°C (cold startup at -40)
- Storage temperature: -40 to +85 °C
- Humidity (non-condensing) 5 to 95% RH
- Vibration and shock: IEC60068-2-6

STANDARDS COMPLIANCE

- Electrical safety - UL508/CSA C22.2/14, EN61010-1, CE
- EMC - FCC part 15, ICES-003, EN55022, EN61000-6, CE
- Hazardous locations: UL1604/CSA C22.2/213 (Class I, Div. 2); EN60079-15 (Zone 2, Category 3), CE (ATEX)
- Maritime rated for marine & offshore per ABS
- Eye safety (fiber models) - IEC60825-1, Class 1; FDA 21 CFR 1040.10 and 1040.11

PHYSICAL

- DIN rail or direct panel mounting
- Ingress protection: IP30
- Case: UL94V0 Lexan (SL) or Aluminum (SLX)
- Weight:
  - o 4 oz (0.11 kg) – SL-5ES
  - o 6 oz (0.17 kg) – SLX-5ES, SL-8/9ES
  - o 8 oz (0.23 kg) – SLX-8/9ES
- Dimensions – see mechanical diagram below

All specifications are subject to change. Consult factory for latest info.

MECHANICAL DRAWINGS

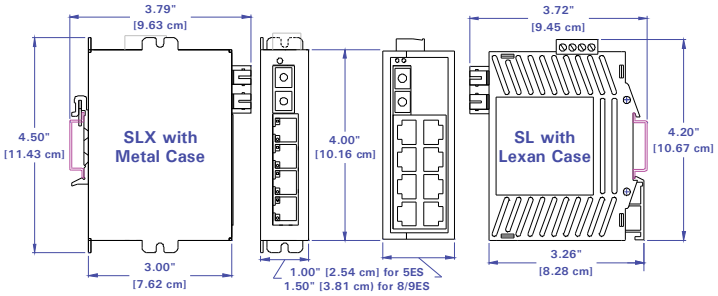

See the User Manual for a More Detailed Diagram

ORDERING GUIDE

SLX-5ES-1	5 RJ45 10/100 ports
SLX-5ES-2SC	4 RJ45 ports and 1 mm fiber SC, 4 Km
SLX-5ES-2ST	4 RJ45 ports and 1 mm fiber ST, 4 Km
SLX-5ES-3SC	4 RJ45 ports and 1 sm fiber SC, 20 Km
SLX-5ES-3ST	4 RJ45 ports and 1 sm fiber ST, 20 Km
SLX-6ES-4/5	Dual fiber - see separate datasheet
SLX-8ES-1	8 RJ45 10/100 ports
SLX-8ES-6/7	Three fiber - see separate datasheet
SLX-9ES-2SC	8 RJ45 ports and 1 mm fiber SC, 4 Km
SLX-9ES-2ST	8 RJ45 ports and 1 mm fiber ST, 4 Km
SLX-9ES-3SC	8 RJ45 ports and 1 sm fiber SC, 20 Km
SLX-9ES-3ST	8 RJ45 ports and 1 sm fiber ST, 20 Km
SL-	w/Lexan case and limited temperature
ET-PS-024-02	2 Amp, AC to 24 VDC Power Supply
SP-ETH-2	Dual Ethernet port surge & lightning protector

Contact Sixnet for special or long haul fiber transeivers up to 120 Km.

Sixnet
331 Ushers Road • Ballston Lake, NY 12019 • USA
+1.518.877.5173 • Fax +1.518.877.8346 • sales@sixnet.com

ITEM 701

Adapter Panel, Fiber Optic, 6-Fiber, ST, Zirconium Insert, Multimode/Singlemode

ITEM #:
AP-VAAWC6

Description:	**Adapter Panel, Fiber Optic, 6-Fiber, ST, Zirconium Insert, Multimode/Singlemode**
Item #:	**AP-VAAWC6**

ITEM 200

Type 12 Free-Stand Enclosures

Free-Stand, Single or Dual Access, Type 12

Industry Standards

UL 508A Listed; Type 12; File No. E61997
cUL Listed per CSA C22.2 No. 94; Type 12; File No. E61997

NEMA/EEMAC Type 12
E.I.A. RS310D
CSA, File No. 42186, Type 12
IEC 60529, IP55

Application

Available with front or front and rear access, these Type 12 enclosures have sturdy unibody construction and flexible internal mounting options.

Specifications

- 12 gauge steel
- Seams continuously welded and ground smooth; no holes or knockouts
- Stiffeners on back of two-door enclosures maintain flatness and increase rigidity
- Lifting eyes for easy handling
- 3-point latches operated by oil-tight key-locking handle
- Latch rod rollers for easy door closing
- Heavy-gauge continuous hinges support each door
- Data pockets are high-impact thermoplastic
- Internal mounting channels welded horizontally to sides at top, bottom and center
- Optional panels and rack mount angles can be mounted anywhere along channels
- Oil-resistant door gasket
- Bonding provision on door
- Provision for mounting fluorescent light

Finish

White polyester powder paint inside with ANSI 61 gray polyester powder paint outside over pretreated surfaces. Optional panels and side-mounted panels have white enamel or conductive finish. Swing-out panels, rack mounting frames, heavy-duty panel supports and center panel supports are white.

Accessories

See also Accessories.
Plate Casters
Electric Heater
Door Stop Kit
Compact Cooling Fans
PANELITE™ Enclosure Lights Overview

Modification and Customization

Hoffman excels at modifying and customizing products to your specifications. Contact your local Hoffman sales office or distributor for complete information.

Bulletin: A30

© 2011 Pentair Technical Products

Type 12 Free-Stand Enclosures

Standard Product **One-Door Single-Access**

Catalog Number	AxBxC in.	AxBxC mm	F (in.)	F (mm)	G (in.)	G (mm)	Number of Lifting Eyes	Number of Rack Units
A602418FS	60.06 x 24.06 x 18.06	1526 x 611 x 459	32.03	814	23.12	587	2	28
A722418FS	72.06 x 24.06 x 18.06	1830 x 611 x 459	38.03	966	29.12	740	2	35
A723018FS	72.06 x 30.06 x 18.06	1830 x 764 x 459	38.03	966	29.12	740	2	35
A723618FS	72.06 x 36.06 x 18.06	1830 x 916 x 459	38.03	966	29.12	740	2	35
A902420FS	90.06 x 24.06 x 20.06	2288 x 611 x 510	47.03	1195	38.12	968	2	45
A903620FS	90.06 x 36.06 x 20.06	2288 x 916 x 510	47.03	1195	38.12	968	2	45
A603624FS	60.06 x 36.06 x 24.06	1526 x 916 x 611	32.03	814	23.12	587	2	28
A722424FS	72.06 x 24.06 x 24.06	1830 x 611 x 611	38.03	966	29.12	740	2	35
A723024FS	72.06 x 30.06 x 24.06	1830 x 764 x 611	38.03	966	29.12	740	2	35
A723624FS	72.06 x 36.06 x 24.06	1830 x 916 x 611	38.03	966	29.12	740	2	35
A903624FS	90.06 x 36.06 x 24.06	2288 x 916 x 611	47.03	1195	38.12	968	2	45
A723630FS	72.06 x 36.06 x 30.06	1830 x 916 x 764	38.03	966	29.12	740	4	35
A723636FS	72.06 x 36.06 x 36.06	1830 x 916 x 916	38.03	966	29.12	740	4	35
A903636FS	90.06 x 36.06 x 36.06	2288 x 916 x 916	47.03	1195	38.12	968	4	45

One-Door Single-Access Free-Standing Type 12 Enclosures

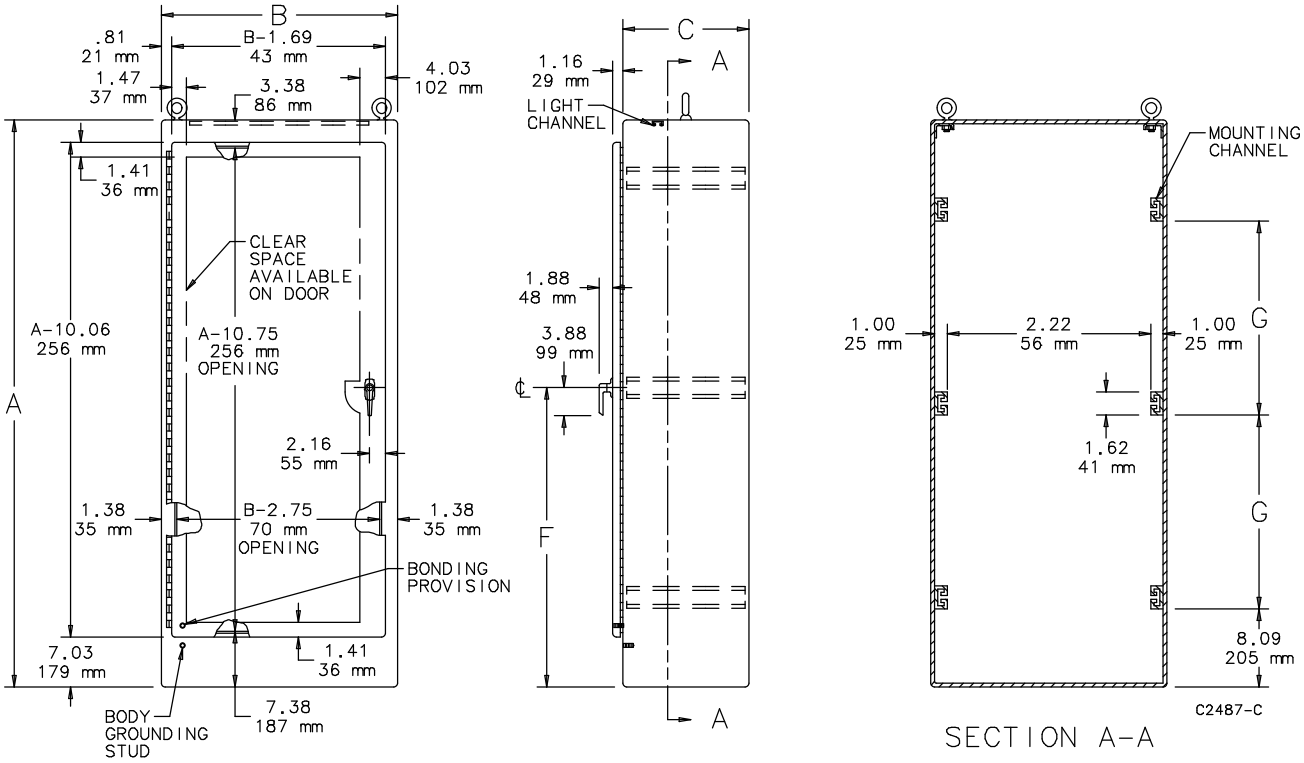

NOTE:
1. Four lifting eyes are furnished if C=30.06 (764mm) or more.
2. See General Accessories chapter for section view A-A showing accessories.
3. Removable 12.00 x 12.00 (305 mm x 305mm) data pocket.

© 2011 Pentair Technical Products

ITEM 201

Panels for Enclosures

Catalog Number	Material	Panel Size D x E (in.)	Panel Size D x E (mm)	Panel Gauge or Thickness	Edge Flanges	T (in.)	T (mm)	Number of Holes
A42P42G	Conductive steel	39.00 x 39.00	991 x 991	12 ga.	4	0.75	19	8
A48P24	Painted steel	45.00 x 21.00	1143 x 533	12 ga.	2	0.75	19	6
A48P24G	Conductive steel	45.00 x 21.00	1143 x 533	12 ga.	2	0.75	19	6
A48P30	Painted steel	45.00 x 27.00	1143 x 686	12 ga.	4	0.75	19	6
A48P30G	Conductive steel	45.00 x 27.00	1143 x 686	12 ga.	4	0.75	19	6
A48P36	Painted steel	45.00 x 33.00	1143 x 838	12 ga.	4	0.75	19	8
A48P36G	Conductive steel	45.00 x 33.00	1143 x 838	12 ga.	4	0.75	19	8
A48P36SS6	Stainless Steel	45.00 x 33.00	1143 x 838	12 ga.	4	0.75	19	8
A48P36AL	Aluminum	45.00 x 33.00	1143 x 838	0.10 in./3 mm	4	0.75	19	8
A48P42	Painted steel	45.00 x 39.00	1143 x 991	12 ga.	4	0.75	19	8
A48P42G	Conductive steel	45.00 x 39.00	1143 x 991	12 ga.	4	0.75	19	8
A48P48	Painted steel	44.00 x 44.00	1118 x 1118	10 ga.	4	0.88	22	8
A48P48G	Conductive steel	44.00 x 44.00	1118 x 1118	10 ga.	4	0.88	22	8
A54P42	Painted steel	50.00 x 38.00	1270 x 965	12 ga.	4	0.75	19	8
A54P42G	Conductive steel	50.00 x 38.00	1270 x 965	10 ga.	4	0.75	19	8
A60P24	Painted steel	57.00 x 21.00	1448 x 533	12 ga.	4	0.75	19	6
A60P24G	Conductive steel	57.00 x 21.00	1448 x 533	12 ga.	4	0.75	19	6
A60P30	Painted steel	57.00 x 27.00	1448 x 686	12 ga.	4	0.75	19	6
A60P30G	Conductive steel	57.00 x 27.00	1448 x 686	12 ga.	4	0.75	19	6
A60P36	Painted steel	57.00 x 33.00	1448 x 838	12 ga.	4	0.75	19	8
A60P36G	Conductive steel	57.00 x 33.00	1448 x 838	12 ga.	4	0.75	19	8
A60P36SS6	Stainless Steel	57.00 x 33.00	1448 x 838	12 ga.	4	0.75	19	8
A60P36AL	Aluminum	57.00 x 33.00	1448 x 838	0.10 in./3 mm	4	0.75	19	8
A60BFP42	Painted steel	56.00 x 38.00	1422 x 965	10 ga.	4	0.88	22	10
A60BFP42G	Conductive steel	56.00 x 38.00	1422 x 965	10 ga.	4	0.88	22	10
A60P48	Painted steel	56.00 x 44.00	1422 x 1118	10 ga.	4	0.88	22	12
A60P48G	Conductive steel	56.00 x 44.00	1422 x 1118	10 ga.	4	0.88	22	12
A60P60	Painted steel	56.00 x 56.00	1422 x 1422	10 ga.	4	0.88	22	10
A60P60G	Conductive steel	56.00 x 56.00	1422 x 1422	10 ga.	4	0.88	22	10
A72P36	Painted steel	69.00 x 33.00	1753 x 838	12 ga.	4	0.75	19	8
A72P36G	Conductive steel	69.00 x 33.00	1753 x 838	12 ga.	4	0.75	19	8
A72P60	Painted steel	68.00 x 56.00	1727 x 1422	10 ga.	4	0.88	22	12
A72P60G	Conductive steel	68.00 x 56.00	1727 x 1422	10 ga.	4	0.88	22	12
A72P72	Painted steel	68.00 x 68.00	1727 x 1727	10 ga.	4	0.88	22	10
A72P72G	Conductive steel	68.00 x 68.00	1727 x 1727	10 ga.	4	0.88	22	10

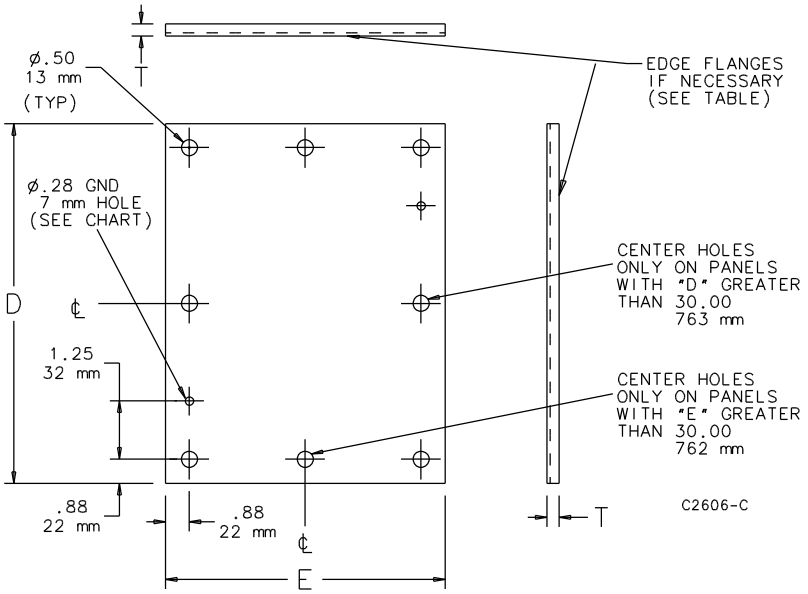

© 2009 Hoffman Enclosures Inc.

ITEMS 210, 211

PF 32000
Filterfan®
PFA 30000
Exhaust filter

- Installation size 3, air flow rate up to 65 CFM
- System of protection IP 54 and IP 55, NEMA type 12
- UL, cUL to NITW2 Category and CE approved, CSA pending

Options:

- **UV-resistance / EMC, consult factory for part numbers**

Data		PF32000			Unit
Part number	RAL 9011 (Black Grill)	11632104050	11632154050	11632804050	
	RAL 7035 (Lt. Gray Grill)	11632104055	11632154055	11632804055	
		AC 50 Hz / 60 Hz		DC	
Rated voltage ± 10 %		230	115	24	V
Unimpeded airflow (CFM2)		65 (110)			CFM (m^3/h)
Air flow rate in combination (PF + PFA 30000) (CFM3)		38 (64)			
Power consumption		19 / 18	20 / 20	5	W
Current consumption		0.12 / 0.18	0.24 / 0.23	0.21	A
Noise level (according to EN ISO 3741)		40			
Weight		1.9 (0.87)		1.3 (0.61)	lb (kg)
Type of connection		terminal strip		cable, 2-core, length 310 mm	
Fuse (Recommended)		6			A
System of protection according to EN 60529 / UL 50		NEMA Type 12 - fluted filter / IP 55			
Filtration efficiency		91			%
Filter mat quality class [1]		G 4			
Duty cycle		100			%
Bearing type		sleeve bearing		ball bearing	
Service life L_{10} (+ 40 °C)[2]		37500	40000	62500	h
Temperature range		+ 5 … + 131 / - 15 … + 55			°F / °C
Material Protection Rating		made of injection-molded thermoplastic, self-extinguishing, UL 94 VO, UV-resistant optional			

Accessories		Piece	Part number	Information on page
Exhaust filter PFA 30000	RAL 9011 (Black Grill)	1	11730004050	164
	RAL 7035 (Lt. Gray Grill)	1	11730004055	164
Thermostat FLZ 530° F		1	17121000010	174

[1] according to DIN EN 779
[2] fan failure is defined as being when the current and speed deviate or the operating noises are out of the ordinary
Approvals see page 136

Cooling Capacity Performance Curves	Static Pressure Performance Curves
PF 32000 T12 / IP 55 (& UV option)	PF 32000 T12 / IP 55 (& UV option)

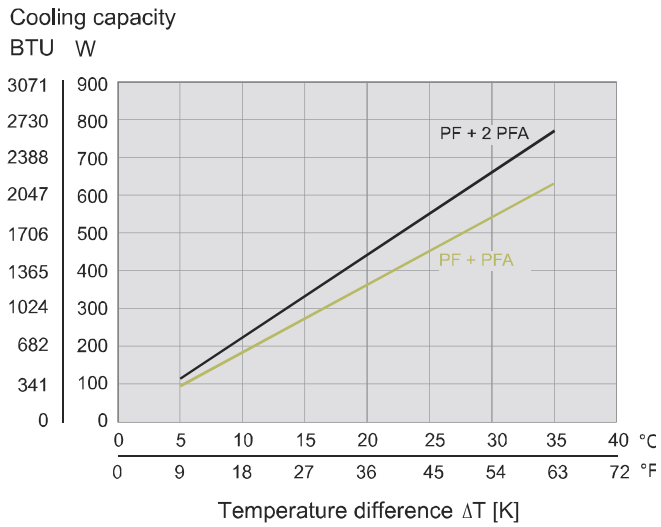

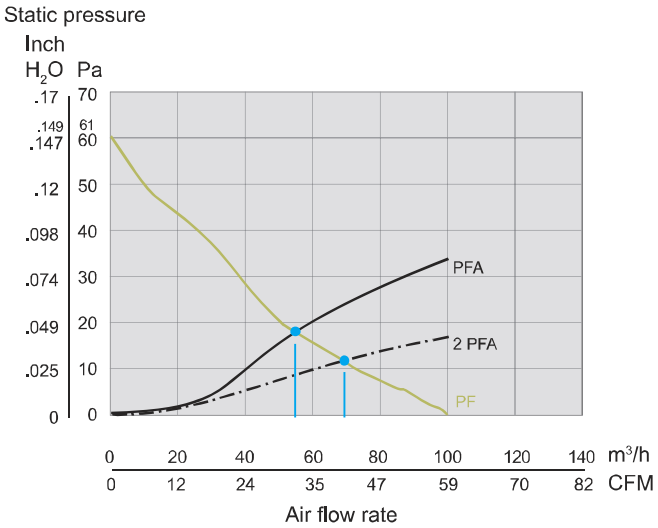

Dimensions

inches (mm)	PF 32000		PFA 30000
	AC	DC	Exhaust
X	7.95 (202)	7.95 (202)	7.95 (202)
Y	7.95 (202)	7.95 (202)	7.95 (202)
Z1	.24 (6)	.24 (6)	.24 (6)
Z2	3.43 (87)	3.19 (81)	1.34 (34)
A[1]	6.97 (177)[2]	6.97 (177)[2]	6.97 (177)[2]
B[1]	6.97 (177)[2]	6.97 (177)[2]	6.97 (177)[2]

[1] for material thicknesses up to .07" (2 mm)
+1 mm for thickness of material > .07" (2 mm) ≤ 1.2" (3 mm)

[2] add .039" (1 mm) for EMC version

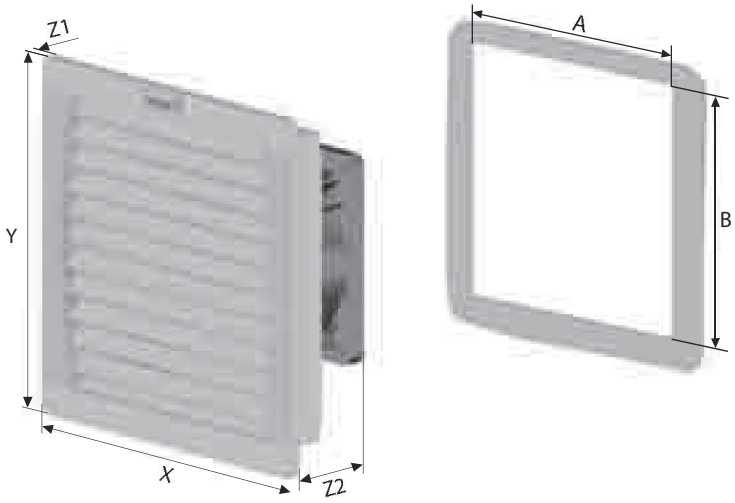

Lighting Packages

Remote Switches for Fluorescent Light Package

Catalog Number	Description
ALFSWM	Manual Switch
ALFSWD	Door-Activated Switch
PLFSWM	Manual Switch [a]
PLFSWD	Door-Activated Switch [a]

[a] For installation in PROLINE® Enclosures.

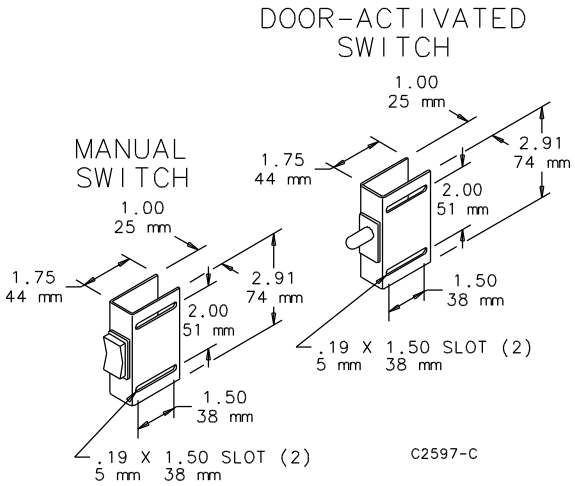

Remote switches for the Fluorescent Light Packages. Mounts on the frame and includes mounting hardware. Mounting plate is 14 gauge steel with a plated finish.

Bulletin: A80LT, P20

© 2009 Hoffman Enclosures Inc.

ITEM 213

DIN Rail Mount Thermostats

GENESIS AUTOMATION©

Adjustable Thermostats for Heat or Cooling

Type	FGT 100	FGT 200	FGT 10 1	FGT 20 1
Function	Heating Control Normally Closed	Cooling Control Normally Open	Heating Control Normally Closed	Cooling Control Normally Open
Temperature Range [*C]	-10 to + 50 *C	0 to + 60 *C	14 to + 122 *F	32 to + 140 *F
Hysterisis [*C]	7 K ± 4 K	7 K ± 4 K	7 K ± 4 K	7 K ± 4 K
Current Rating at 250V AC	16	16	16	16
at 100V AC	15	15	15	15
at 24V DC	2,5	2,5	2.5	2.5
at 12V DC	5	5	5	5
Voltage [V] AC	100 - 250	100 - 250	100 - 250	100 - 250
[V] DC	12 - 24	12 - 24	12 - 24	12 - 24
Degree of enclosure protection	IP 30	IP 30	IP 30	IP 30
Protection Class	II	II	II	II
Dimensions LxWxH [mm]	65 x 33 x 43	65 x 33 x 43	65 x 33 x 43	65 x 33 x 43

Features

- Common product carries UL, CSA, VDE approvals (VDE pending)
- Integrated 35mm DIN Rail mounting features (EN 50022)
- Adjustable temperature control
- Broad temperature range
- 100,000 cycle rating at 100-250VAC
- Versions differentiated by button colour
- Compact and lightweight

Data is given for illustration purposes only and does not release the customer from independent application tests. This information is subject to change without notice.

Genesis Automation Inc. 9013 Heritage Drive Plain City, OH 43064 Phone: 614-873-0980 FAX: 614-873-0982
www.genesisautomationonline.com E-mail sales@genesisautomationonline.com

ITEMS 214, 215

GE Advantage White Fluorescent Direct Wire Under Cabinet 18 In. Light Fixture

Model # 16547 Internet/Catalog # 100384843
Store SKU # 759583

15W Replacement Bulb: F15T8WW

Description

This fixture is great for basic kitchens, basements or home offices. It features a durable steel housing and warm fluorescent bulb. Wire nuts, strain relief and mounting hardware are all included.

Simple to install
Convenient on/off rocker switch
Light bulb and mounting hardware included
3 year limited fixture warranty
MFG Brand Name : GE
MFG Model # : 16547
MFG Part # : 16547

Specifications

Assembled Depth (In Inches) : 1.75 in
Assembled Height (In Inches) : 18.38 in
Assembled Weight (In LBS) : 2.55 lb
Assembled Width (In Inches) : 4.8 in
Color/Finish : White
Energy Star Compliant : No
Hardwired or Plug-In : Hardwired
Maximum Bulb Wattage : 15 W
Number of Tiers : 1
Shade/Glass Type : Plastic
Width : 4.8 in

ITEM 216

Rockwell Automation

IEC TERMINAL BLOCK ACCESSORIES

DIN Rail Receptacle

Convenient 15 A or 20 A power source designed to be installed in panels that will be used in North America and other locations that use the NEMA 5-15 socket (125V, 50/60 Hz).

DIN Rail Receptacle		Standard Duplex		Ground Fault Circuit Interrupter (GFCI)	
Photo					
Certifications		c UL US LISTED			
		UL 508A, NEMA WD-6, NEMA 5-15R			
		UL498		UL 498, UL 943	
Device Rating	15 A	15 Amp 125V			
	20 A	20 Amp 125V			
Operating Frequency		50/60 Hz			
Dielectric Voltage		Withstands 2000V per UL498		Withstands 1500V per UL498	
Short-Circuit Current Rating		10 kA		2 kA	
Operating Temperature Range		-31…+140 °F (-35…+60 °C)			
Storage Temperature Range		-13…+176 °F (-25…+80 °C)			
Terminal Wire Sizes		#20…#10 AWG solid or stranded			
Terminal Torque		7 lb. - in. (.79 Nm)			
DIN Rail Receptacle	15 A	Cat. No.	Pkg. Qty.	Cat. No.	Pkg. Qty.
		1492-REC15	1	1492-REC15G	1
	20 A	1492-REC20	1	1492-REC20G	1
Accessories Marking Systems Marker Card:		1492-MS10X17	5 (40/card)	1492-MS10X17	5 (40/card)

Extract from the online catalog

SD-US/SC/LA/GY

Order No.: 2963860

http://eshop.phoenixcontact.de/phoenix/treeViewClick.do?UID=2963860

Rail-mountable socket, with light indicator, housing color: gray, with screw connection, national version: USA, housing width 45 mm

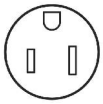

Commercial data	
EAN	4017918859138
Pack	10 pcs.
Customs tariff	85366990
Weight/Piece	0.07641 KG
Catalog page information	Page 603 (IF-2009)

Product notes

WEEE/RoHS-compliant since: 07/20/2006

http://www.download.phoenixcontact.com Please note that the data given here has been taken from the online catalog. For comprehensive information and data, please refer to the user documentation. The General Terms and Conditions of Use apply to Internet downloads.

Technical data

General data

Nominal voltage U_N	125 V AC
Nominal current I_N	15 A AC
Status display	Glow lamp or LED with preresistor

SD-US/SC/LA/GY Order No.: 2963860
http://eshop.phoenixcontact.de/phoenix/treeViewClick.do?UID=2963860

Contact material	CuZn37
For country-specific use in	USA
Color	gray
Insulating material	PA
Ambient temperature (operation)	-20 °C ... 60 °C
Ambient temperature (storage/transport)	-20 °C ... 60 °C
Standards/regulations	IEC 83
	DIN 49440-1
	UL 498
Width	45 mm
Height	70.5 mm
Depth	75 mm

Connection data

Conductor cross section solid min.	0.2 mm²
Conductor cross section solid max.	4 mm²
Conductor cross section stranded min.	0.2 mm²
Conductor cross section stranded max.	2.5 mm²
Conductor cross section AWG/kcmil min.	30
Conductor cross section AWG/kcmil max	12
Type of connection	Screw connection
Stripping length	8 mm
Screw thread	M3

Certificates / Approvals

Certification	CUL Listed, GOST, UL Listed

Diagrams/Drawings

Circuit diagram

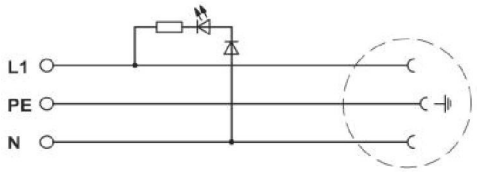

1P C60N

2P C60N

Multi 9 C60N UL 489 Listed 240 V Miniature Circuit Breakers

- UL 489 Listed and CSA 22.2 No.5.1 for branch circuit protection
- Eliminates concerns and uncertainty of using a UL 1077 device where a UL 489 device is required
- Replaces fuses in low-ampere range; 17 ratings up to 35 A

Trip Curve	Use	Magnetic Release
C	For typical loads	7–10 x ampere rating (7–14 for DC)
D	For high inrush	10–14 x ampere rating

- 10 k AIR (1P @ 120 Vac; 2P and 3P @ 240 Vac)
- 60 Vdc for 1P and 125 Vdc for 2P (on C-curve circuit breakers only, see table below)
- Increased installation flexibility with standard box lugs or optional ring terminals
- Allows easy front-mounting and rear wiring when using ring terminals
- A wide range of electrical and mechanical accessories
- Suitable for reverse feeding
- Trip-free mechanism
- Positive indication of contact disconnect

3P C60N

Box Lug C60N

Ring Tongue C60N

Box/Ring C60N

Table 7.27: UL 489 Circuit Breakers (120/240 V)

Rating (A)	C Curve—7–10 Times Ampere Rating (7–14 DC)						D Curve—10–14 Times Ampere Rating					
	1P▲		2P■		3P		1P		2P		3P	
	Cat. No.	$ Price	Cat. No.	$ Price	Cat. No.	$ Price	Cat. No.	$ Price	Cat. No.	$ Price	Cat. No.	$ Price
Box Lug/Box Lug												
0.5	60100	**83.00**	60134	**179.00**	—	—	60117	**83.00**	60151	**179.00**	—	—
1	60101	**83.00**	60135	**179.00**	60168	**258.00**	60118	**83.00**	60152	**179.00**	60184	**258.00**
1.5	60102	**83.00**	60136	**179.00**	60169	**258.00**	60119	**83.00**	60153	**179.00**	60185	**258.00**
2	60103	**83.00**	60137	**179.00**	60170	**258.00**	60120	**83.00**	60154	**179.00**	60186	**258.00**
3	60104	**83.00**	60138	**179.00**	60171	**258.00**	60121	**83.00**	60155	**179.00**	60187	**258.00**
4	60105	**83.00**	60139	**179.00**	60172	**258.00**	60122	**83.00**	60156	**179.00**	60188	**258.00**
5	60106	**83.00**	60140	**179.00**	60173	**258.00**	60123	**83.00**	60157	**179.00**	60189	**258.00**
6	60107	**76.00**	60141	**164.00**	60174	**237.00**	60124	**76.00**	60158	**164.00**	60190	**237.00**
7	60108	**76.00**	60142	**164.00**	60175	**237.00**	60125	**76.00**	60159	**164.00**	60191	**237.00**
8	60109	**76.00**	60143	**164.00**	60176	**237.00**	60126	**76.00**	60160	**164.00**	60192	**237.00**
10	60110	**76.00**	60144	**164.00**	60177	**237.00**	60127	**76.00**	60161	**164.00**	60193	**237.00**
13	60111	**76.00**	60145	**164.00**	60178	**237.00**	60128	**76.00**	60162	**164.00**	60194	**237.00**
15	60112	**76.00**	60146	**164.00**	60179	**237.00**	60129	**76.00**	60163	**164.00**	60195	**237.00**
20	60113	**76.00**	60147	**164.00**	60180	**237.00**	60130	**76.00**	60164	**164.00**	60196	**237.00**
25	60114	**76.00**	60148	**164.00**	60181	**237.00**	60131	**76.00**	60165	**164.00**	60197	**237.00**
30	60115	**80.00**	60149	**171.00**	60182	**248.00**	60132	**80.00**	60166	**171.00**	60198	**248.00**
35	60116	**80.00**	60150	**171.00**	60183	**248.00**	60133	**80.00**	60167	**171.00**	60199	**248.00**
Ring Tongue/Ring Tongue												
0.5	60200	**87.00**	60234	**188.00**	—	—	60217	**87.00**	60251	**188.00**	—	—
1	60201	**87.00**	60235	**188.00**	60268	**273.00**	60218	**87.00**	60252	**188.00**	60284	**273.00**
1.5	60202	**87.00**	60236	**188.00**	60269	**273.00**	60219	**87.00**	60253	**188.00**	60285	**273.00**
2	60203	**87.00**	60237	**188.00**	60270	**273.00**	60220	**87.00**	60254	**188.00**	60286	**273.00**
3	60204	**87.00**	60238	**188.00**	60271	**273.00**	60221	**87.00**	60255	**188.00**	60287	**273.00**
4	60205	**87.00**	60239	**188.00**	60272	**273.00**	60222	**87.00**	60256	**188.00**	60288	**273.00**
5	60206	**87.00**	60240	**188.00**	60273	**273.00**	60223	**87.00**	60257	**188.00**	60289	**273.00**
6	60207	**81.00**	60241	**174.00**	60274	**252.00**	60224	**81.00**	60258	**174.00**	60290	**252.00**
7	60208	**81.00**	60242	**174.00**	60275	**252.00**	60225	**81.00**	60259	**174.00**	60291	**252.00**
8	60209	**81.00**	60243	**174.00**	60276	**252.00**	60226	**81.00**	60260	**174.00**	60292	**252.00**
10	60210	**81.00**	60244	**174.00**	60277	**252.00**	60227	**81.00**	60261	**174.00**	60293	**252.00**
13	60211	**81.00**	60245	**174.00**	60278	**252.00**	60228	**81.00**	60262	**174.00**	60294	**252.00**
15	60212	**81.00**	60246	**174.00**	60279	**252.00**	60229	**81.00**	60263	**174.00**	60295	**252.00**
20	60213	**81.00**	60247	**174.00**	60280	**252.00**	60230	**81.00**	60264	**174.00**	60296	**252.00**
25	60214	**81.00**	60248	**174.00**	60281	**252.00**	60231	**81.00**	60265	**174.00**	60297	**252.00**
30	60215	**84.00**	60249	**182.00**	60282	**263.00**	60232	**84.00**	60266	**182.00**	60298	**263.00**
35	60216	**84.00**	60250	**182.00**	60283	**263.00**	60233	**84.00**	60267	**182.00**	60299	**263.00**
Box Lug/Ring Tongue												
0.5	60300	**$86.00**	60334	**186.00**	—	—	60317	**86.00**	60351	**186.00**	—	—
1	60301	**86.00**	60335	**186.00**	60368	**$269.00**	60318	**86.00**	60352	**186.00**	60384	**269.00**
1.5	60302	**86.00**	60336	**186.00**	60369	**269.00**	60319	**86.00**	60353	**186.00**	60385	**269.00**
2	60303	**86.00**	60337	**186.00**	60370	**269.00**	60320	**86.00**	60354	**186.00**	60386	**269.00**
3	60304	**86.00**	60338	**186.00**	60371	**269.00**	60321	**86.00**	60355	**186.00**	60387	**269.00**
4	60305	**86.00**	60339	**186.00**	60372	**269.00**	60322	**86.00**	60356	**186.00**	60388	**269.00**
5	60306	**86.00**	60340	**186.00**	60373	**269.00**	60323	**86.00**	60357	**186.00**	60389	**269.00**
6	60307	**80.00**	60341	**171.00**	60374	**248.00**	60324	**80.00**	60358	**171.00**	60390	**248.00**
7	60308	**80.00**	60342	**171.00**	60375	**248.00**	60325	**80.00**	60359	**171.00**	60391	**248.00**
8	60309	**80.00**	60343	**171.00**	60376	**248.00**	60326	**80.00**	60360	**171.00**	60392	**248.00**
10	60310	**80.00**	60344	**171.00**	60377	**248.00**	60327	**80.00**	60361	**171.00**	60393	**248.00**
13	60311	**80.00**	60345	**171.00**	60378	**248.00**	60328	**80.00**	60362	**171.00**	60394	**248.00**
15	60312	**80.00**	60346	**171.00**	60379	**248.00**	60329	**80.00**	60363	**171.00**	60395	**248.00**
20	60313	**80.00**	60347	**171.00**	60380	**248.00**	60330	**80.00**	60364	**171.00**	60396	**248.00**
25	60314	**80.00**	60348	**171.00**	60381	**248.00**	60331	**80.00**	60365	**171.00**	60397	**248.00**
30	60315	**83.00**	60349	**179.00**	60382	**258.00**	60332	**83.00**	60366	**179.00**	60398	**258.00**
35	60316	**83.00**	60350	**179.00**	60383	**258.00**	60333	**83.00**	60367	**179.00**	60399	**258.00**

▲ 1P dual rated 120 Vac/60 Vdc.
■ 2P dual rated 240 Vac/125 Vdc.

Interrupting ratings . . . . . Page 7-3
Accessories . . . . . Page 7-20
Dimensions. . . . . Page 7-53
Mounting Bases . . . . . Page 7-13
DIN Mounting Rail . . . . . Section 18

© 2007 Schneider Electric
All Rights Reserved

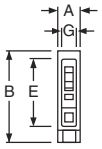

Figure 1

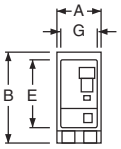

Figure 2

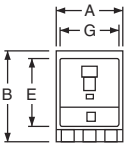

Figure 3

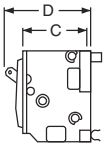

QO, QOB

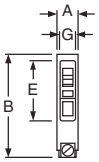

Figure 4

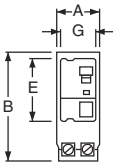

Figure 5

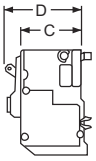

QO-GFI, QO-PL
QO-EPD

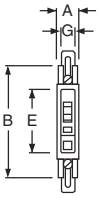

Figure 6

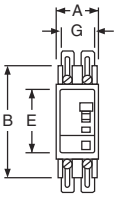

Figure 7

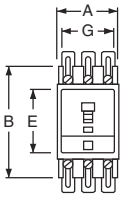

Figure 8

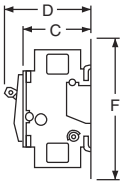

QOU, QYU
Low Ampere

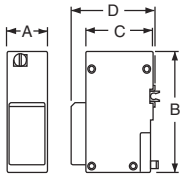

Figure 9
QO-PLPS

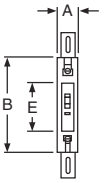

Figure 10

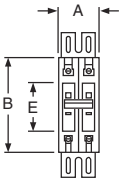

Figure 11

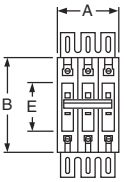

Figure 12

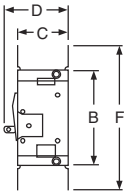

QOU
High Ampere

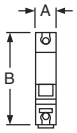

Figure 13

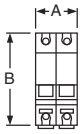

Figure 14

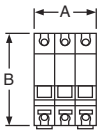

Figure 15

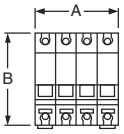

Figure 16

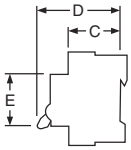

C60

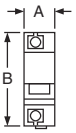

Figure 17

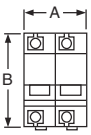

Figure 18

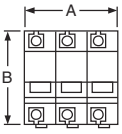

Figure 19

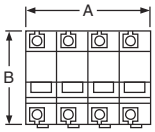

Figure 20

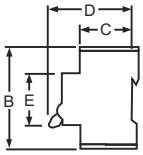

C120

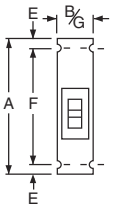

Figure 21

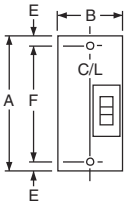

Figure 22

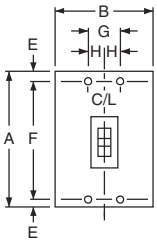

Figure 23

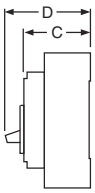

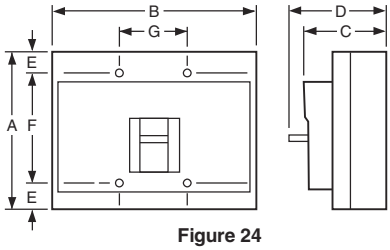

Figure 24

Table 7.133: QO®, QOU, Multi 9™ Circuit Breakers

Circuit Breaker Cat. No. Prefix	Poles	Fig. No.	Dimensions—Inches						
			A	B	C	D	E	F	G
QO, QOB	1	1	0.75	3.00▲	2.31	2.91	2.25	—	0.59
	2	2	1.50	3.00▲	2.31	2.91	2.25	—	1.34
	3	3	2.25	3.00▲	2.31	2.91	2.25	—	2.09
QOB-VH 150 A QOB-VH 110–150 A	2	2	3.0	5.72	2.53	4.90	3.78	—	2.85
	3	3	4.50	5.72	2.53	4.90	3.78	—	4.35
QO-PL QO-GFI QO-EPD	1	4	0.75	4.12■	2.31	2.91	2.25	—	0.59
	2	5	1.50	4.12■	2.31	2.91	2.25	—	1.34
	3	5	2.25	4.12■	2.31	2.91	2.25	—	2.09
QOU QYU Low Ampere	1	6	0.75	4.05♦	2.38	2.98	2.25	5.00★	0.62
	2	7	1.50	4.05♦	2.38	2.98	2.25	5.00★	1.37
	3	8	2.25	4.05★	2.38	2.98	2.25	5.00△	2.12
QOU High Ampere	1	10	0.75	4.45	2.37	2.96	2.25	6.78	—
	2	11	1.50	4.45	2.37	2.96	2.25	6.78	—
	3	12	2.25	4.45	2.37	2.96	2.25	6.78	—
Multi 9™ C60N	1	13	0.71	3.19	1.73	2.76	1.77	—	—
	2	14	1.42	3.19	1.73	2.76	1.77	—	—
	3	15	2.13	3.19	1.73	2.76	1.77	—	—
	4	16	2.84	3.19	1.73	2.76	1.77	—	—
Multi 9 NC100	1	17	1.06	3.19	1.73	2.76	1.77	—	—
	2	18	2.13	3.19	1.73	2.76	1.77	—	—
	3	19	3.19	3.19	1.73	2.76	1.77	—	—
	4	20	4.25	3.19	1.73	2.76	1.77	—	—
QO-PLPS Power Supply	2	9	1.45	4.35	2.42	3.11	—	—	—

▲ 35–70 A is 3.12 in; 80–100 A 2P and 70–100 A 3P are 3.50 in.
■ QO-PL is 4.55 in.
♦ 80–100 A 1P and 80–125 A 2P are 4.45 in
★ 80–100 A 1P and 80–125 A 2P are 6.78 in.
▼ 70–100 A 4.45 in.
△ 70–100 A is 6.78 in.

Table 7.134: QB, QD, QG, QJ, Q4, FA, FI, KA, KC, KI, LA, LC, LI, LE, LX, LXI, MA Circuit Breakers

Circuit Breaker Cat. No. Prefix	Poles	Fig. No.	Dimensions—Inches							
			A	B	C	D	E	F	G	H
QB, QD, QG, QJ	2	22	6.47	3.00	3.02	3.93	□	4.25	—	—
	3	23	6.47	4.50	3.02	3.93	□	4.25	1.50	0.75
FAL, FHL	1	21	6.00	1.50	3.16	4.13	0.44	5.13	1.50	—
	2	22	6.00	3.00	3.16	4.13	0.44	5.13	—	—
	3	23	6.00	4.50	3.16	4.13	0.44	5.13	1.50	0.75
FIL, KAL, KCL, KHL, KIL	2 & 3	23	8.00	4.50	3.66	4.75	0.44	7.13	1.50	0.75
Q4L, LAL, LHL	2 & 3	23	11.00	6.00	4.06	5.84	0.88	9.25	2.00	1.00
LIL, LEL, LXL, LXIL, LCL	2 & 3	24	11.86	7.50	5.48	6.74	0.55	10.75	2.50	
MAL, MHL	2 & 3	23	14.00	9.00	4.53	6.50	1.66	10.69	3.00	1.50

□ Dimensions E are 1.59 in at ON end and 0.63 in at OFF end.

Table 7.135: Shipping Weights◊

Frame Size	Approx. Shipping Weight (Lbs.)	Frame Size	Approx. Shipping Weight (Lbs.)
FAL, FHL 1P	2	KIL	9
FAL, FHL 2P	3	LAL, LHL	15
FAL, FHL 3P	5	LEL, LIL, LXL, LXIL, LCL	25
FIL	8	Q4L	15
QB, QD, QG, QJ	4	MAL, MHL	34
KAL, KHL	7		

◊ All weights are for 3P circuit breakers unless otherwise noted.

© 2007 Schneider Electric
All Rights Reserved

ITEM 324

AC Power
For *Business-Critical Continuity™*

Liebert® GXT3, 500VA -3000VA Models

Reliable On-Line UPS Protection In A Compact 2U Package

Liebert GXT3 is a true on-line UPS that delivers continuous, high-quality AC power to IT equipment with no break when transferring to battery. It protects equipment from virtually all power disturbances due to blackouts, brownouts, sags, surges or noise interference. The UPS is available in rack/tower and mini-tower configurations.

One of the most affordable UPS systems in its class, Liebert GXT3 leads the industry in combining small size, high capacity and high reliability features:

- On-line design means zero transfer time from external to internal power. When utility power fails, your critical load remains supported by a seamless flow of power.
- Liebert GXT3 rated output power factor of 0.9 better matches up with switch-mode power supplies used in today's IT equipment. A higher output power factor allows for a more efficient utilization of the UPS.
- The UPS provides easy serviceability with user replaceable hot-swappable batteries.
- For maximum control, Liebert GXT3 is custom configurable to your needs using a specially designed Windows software package.

Ideally suited for:

- PCs
- Network workstations
- Servers
- Network closets
- Large network peripherals
- VoIP

EMERSON™
Network Power

ITEM 324

The Proven Reliability Of True On-Line Operation Plus The Features You Need Most

Although Liebert GXT3 requires just a slim 2U of rack space, it provides the capabilities of a physically larger system. Get up to 3kVA of capacity and battery backup, in 120V or 230V systems. External battery cabinets may be added for extended run time.

On-Line UPS Protection for Essential and Critical Applications

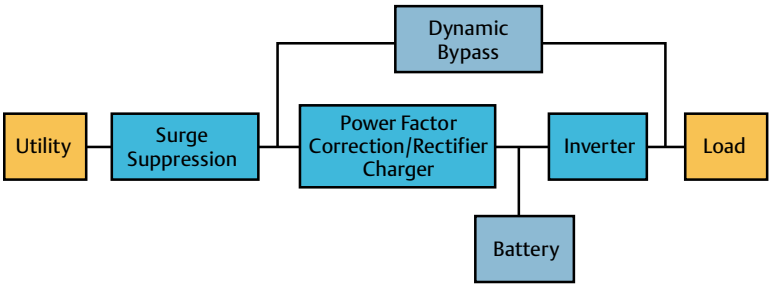

Liebert GXT3 is a true on-line power source, so whatever the quality of power coming in, the pure sinewave output meets the exacting standards of your equipment.

Liebert GXT3 includes:

- Power factor correction
- Internal batteries
- Frequency conversion
- Internal automatic bypass to utility in case of adverse UPS conditions
- Manual bypass capability
- Support for up to four external battery cabinets (rack/tower models)

Liebert GXT3 handles all these potential power problems:

- Power spikes and transients
- EMI/RFI noise
- Voltage sags and brownout conditions
- Harmonics
- Power-factor corrected loads
- Outages
- Frequency variations

Liebert GXT3 Standard Features

Flexibility:

Up To Six Battery-Backed Outlets
A generous quantity of battery-backed outlets allows more equipment to be protected by the UPS.

Rotatable Display Panel
The LED display panel rotates 90° to make the readout of the LED display easy to see in rack or tower position.

Automatic Frequency Sensing
The UPS automatically adjusts to the input frequency, 50Hz or 60Hz.

Mounting Flexibility
Optional telescoping rack rails mount to the sides of the UPS for easy installation into a rack enclosure. A standard tower support base ships with the UPS.

Liebert GXT3 is easily configured for either rack-mount or tower applications. The LED display rotates for easy viewing in either orientation.

ITEM 324

Liebert GXT3 contains internal batteries, and is also able to support up to four external battery cabinets – also 2U size.

Higher Availability:

Advance Early Warning of UPS System Status
Multiple audible and visual alarms immediately alert you to an output overload, low battery, bypass, battery discharge, battery loss or replace battery condition.

4-8 minutes of Battery Backup Time at Full load
Provides ample time for an orderly shutdown of connected equipment when utility power fails. Optional matching external battery cabinets offer additional backup time.

Overload Capability
Designed to handle output overload conditions.

Full Sequenced Battery Testing
Provides automatic and manual self-diagnostic battery testing capabilities. This provides a comprehensive analysis of the condition of the batteries within the UPS and will notify you when the internal batteries need to be replaced.

User Replaceable Hot Swappable Batteries
Easy to replace batteries increase product life and provide prolonged UPS reliability. Batteries are conveniently located behind the front bezel of the unit.

Power-Factor Correction
Prevents noise, harmonics and distortion from being passed on to connected loads or from being fed back to the utility.

Internal Automatic and Manual Bypass Capability
Assures continuity of power to critical loads during system problems or maintenance.

Intelligent Battery Management
Includes efficient three-stage charging technique and comprehensive discharging protection that extends battery life for greater availability.

Input Circuit Breaker
Provides increased protection to ease recovery from overloads.

Lightning and Surge Protection
The transient voltage surge suppression (TVSS) circuitry inside Liebert GXT3 provides additional protection for the connected equipment from incoming spikes, surges, and other power anomalies present on the incoming utility power source.

Lowest Total Cost Of Ownership:

0.9 Output Power Factor
Liebert GXT3 rated output power factor of 0.9 better matches up with switch-mode power supplies used in today's IT equipment. A higher output power factor allows for a more efficient utilization of the UPS.

Wide Input Voltage Window
Prolongs battery life by allowing the UPS to maximize the use of utility power before transferring to battery when input voltage exceeds specified limits.

Intelligent Fan Operation
Automatically changes rotation speed depending on system requirements to decrease power consumption and noise.

Efficient Operation
≥ 88% AC-AC, minimum.

Warranty Protection
The industry's best warranty – No-hassle two-year warranty with UPS replacement in the event of problems. Shipping is free for both original UPS return and the replacement unit. Optional one-year and three-year extensions also available.

Multiple Choices For Communication, Shutdown And Reporting:

SNMP And Web-Based Communication Options
Liebert IntelliSlot® Web Card provides SNMP and web-based management to your Liebert GXT3. Provides SNMP MIB to monitor and control your UPS from your network management station or any PC running Microsoft Internet Explorer.

- Network shutdown
- Sends both SNMP traps and emails for event notification, and automatically emails a daily UPS history
- Auto-senses 10M/100M Ethernet
- Compatible with shutdown software to ensure graceful computer shutdown

The Liebert GXT3 is also fully compatible with:

- Liebert MultiLink™ shutdown software –included with the Liebert GXT3 UPS
- Liebert Nform™ monitoring software
- Liebert Multiport multiplexing unit
- Liebert Intellislot Relay Interface Card

USB Communications
Windows (98 and later) built-in power management functions provide monitoring of UPS status and manage the automatic orderly shutdown of the computer if a power outage ever exceeds the battery capacity of the UPS. Liebert MultiLink shutdown software can also be used via USB connection.

Optional Liebert MicroPOD Output Distribution And Maintenance Bypass Module
When your computer system can't be without power, even for scheduled UPS maintenance, the Liebert MicroPOD Maintenance Bypass and Output Distribution Unit ensures continuous uptime. It allows you to manually transfer connected equipment to utility power via a maintenance bypass switch, permitting scheduled service or UPS replacement without the need to shut down connected equipment. Features include:

- 2U height minimizes rack space requirements
- Installs with plug-and-play ease
- Two-year, no-hassle replacement warranty

Liebert MicroPOD

Liebert GXT3 mini-tower model provides 1000VA capacity in a compact design.

ITEM 324

Specifications

Model Number	GXT3-500RT120	GXT3-700RT120	GXT3-1000RT120	GXT3-1000MT120
Model Rating VA/W	500/450	700/630	1000/900	1000/900
Dimensions: in. (mm) DxWxH	19.7x16.9x3.4 (497x430x85)			15.4x6.9x8.9 (390x175x225)
Weight: lbs. (kg)	44 (20)			
Input AC Parameter				
Voltage Range	120VAC nominal; variable based on output load			
Frequency	40Hz ~ 70Hz; Auto Sensing			
Input Power Cord	10 ft. attached w/ NEMA 5-15P plug			
Output AC Parameter				
Output Receptacles	5-15R x 6			
Voltage	110/115/120/127VAC (user-configurable); ±3%			
Waveform	Sine wave			
Battery				
Full Load	12 minutes	6 minutes	5 minutes	5 minutes
Half Load	30 minutes	14 minutes	15 minutes	15 minutes
Recharge Time	3 Hours to 90% capacity after full discharge with 100% load till UPS auto-shutdown			
Agency				
Safety	UL 1778, cUL Listed			
RFI/EMI	FCC Part 15, Class A=CISPR22 Class B			
Surge Immunity	IEC 62040-2 2nd Ed			
Transportation	ISTA Procedure 1A			

Model Number	GXT3-1500RT120	GXT3-2000RT120	GXT3-3000RT120	GXT3-3000RT208
Model Rating VA/W	1500/1350	2000/1800	3000/2700	3000/2700
Dimensions: in. (mm) DxWxH	19.7x16.9x3.4 (497x430x85)		23.7x16.9x3.4 (602x430x85)	
Weight: lbs. (kg)	48.5 (22)	52.9 (24)	61.7 (28)	61.7 (28)
Input AC Parameter				
Voltage Range	120VAC nominal; variable based on output load			208VAC nominal; variable based on output load
Frequency	40Hz ~ 70Hz; Auto Sensing			
Input Power Cord	10 ft. attached w/ NEMA 5-15P plug	10 ft. attached w/ NEMA 5-20P plug	10 ft. attached w/ NEMA L5-30P plug	10 ft. attached w/ NEMA L6-20P plug
Output AC Parameter				
Output Receptacles	5-15R x 6	5-20R x 6	L5-30Rx1+5-20Rx6	L6-20Rx1+L6-15Rx2
Voltage	110/115/120/127VAC (user-configurable); ±3%			208/220/230/240 VAC (user-configurable); ±3%
Waveform	Sine wave			
Battery				
Full Load	5 minutes	4 minutes	4 minutes	4 minutes
Half Load	16 minutes	11 minutes	14 minutes	14 minutes
Recharge Time	3 Hours to 90% capacity after full discharge with 100% load till UPS auto-shutdown			
Agency				
Safety	UL 1778, cUL Listed			
RFI/EMI	FCC Part 15, Class A=CISPR22 Class B			
Surge Immunity	IEC 62040-2 2nd Ed			
Transportation	ISTA Procedure 1A			

Liebert Corporation

1050 Dearborn Drive
P.O. Box 29186
Columbus, Ohio 43229
800 877 9222 Phone (U.S. & Canada Only)
614 888 0246 Phone (Outside U.S.)
614 841 6022 FAX

Via Leonardo Da Vinci 8
Zona Industriale Tognana
35028 Piove Di Sacco (PD)
Italy
39 049 9719 111 Phone
39 049 5841 257 FAX

Emerson Network Power Asia Pacific
29/F, The Orient Square Building
F. Ortigas Jr. Road, Ortigas Center
Pasig City 1605
Philippines
+63 2 687 6615
+63 2 730 9572 FAX

liebert.com

24 x 7 Tech Support

800 222 5877 Phone
614 841 6755 (outside U.S.)

While every precaution has been taken to ensure accuracy and completeness in this literature, Liebert Corporation assumes no responsibility, and disclaims all liability for damages resulting from use of this information or for any errors or omissions.

© 2009 Liebert Corporation. All rights reserved throughout the world. Specifications subject to change without notice.

All names referred to are trademarks or registered trademarks of their respective owners.

® Liebert is a registered trademark of the Liebert Corporation.

SL-23182 (R09/09) Printed in USA

Emerson Network Power.
The global leader in enabling *Business-Critical Continuity*™.

- **AC Power**
- Connectivity
- DC Power
- Embedded Computing
- Embedded Power
- Monitoring
- Outside Plant
- Power Switching & Controls
- Precision Cooling
- Racks & Integrated Cabinets
- Services
- Surge Protection

Emerson Network Power.com

Business-Critical Continuity, Emerson Network Power and the Emerson Network Power logo are trademarks and service marks of Emerson Electric Co. ©2009 Emerson Electric Co.

ITEM 700

WAC-2X, Fiber Enclosure, Wall Mount, 2 Panel

ITEM #:
WAC-2X

Description: **WAC-2X, Fiber Enclosure, Wall Mount, 2 Panel**

Item #: **WAC-2X**

Features: Wall-mount enclosure accommodates ***2 panels*** (6-, 8-, 12- or 24- fiber panels). Note:

24 Port Panels only available in LC connectors. 16-gauge steel with corrosion-resistant black powder finish coat. When closed, wall-mount is lockable with a 1" keyed barrel lock. Grommets at the top and bottom allow user to enter main enclosure without unwanted handling of fiber optic cables.

Side swing door allows user to run jumper cable assemblies to final destination. Spools and cable tie down bracket included on the inside compartment.

Dimensions: Width = 13", Depth = 3.6", Height = 9.2"
Weight (unloaded): 6.85 lbs.

Edco HSP121BT-1RU

120 VAC Heavy Duty (Series) 120 Volt AC

The Edco HSP121BT-1RU is an advanced 3-stage hybrid, solid-state power line protector. Features such as noise filtering, common mode and normal mode suppression, nanosecond reaction time, power line tracking, and compression screw terminations make the Edco HSP121BT-1RU an excellent choice in commercial and industrial applications.

The Edco HSP121BT-1RU offers a replaceable fuse designed to remove the load (protected equipment) from the line if the unit is either overloaded or the internal protection fails. This feature prevents surges from entering equipment through a failed protector not noticed by the user.

Features

- Fast response time
- Failure indicator
- Power line tracking
- Filtering
- 3-stage hybrid design
- Replaceable fuse
- UL 1449 recognized
- 5 year warranty

General Technical Specifications

Operating Voltage	120 VAC
Clamping Voltage	325 VAC
Operating Current	15 A
Total Peak Surge Current	39 kA (8 x 20 µs)
Operating Frequency	47-63 Hz
EMI Attenuation (100 kHz to 100 MHz)	> 40 dB
SPD Technology	Metal Oxide Varistors (MOVs) w/ L-C Filter
Modes of Protection	Line-to-Neutral, Line-to-Ground, Neutral-to-Ground
Status Indication	Power On & MOVs functional
Connection Type	3 position, 20A terminal block w/ compression screws Terminals accept up to 14 AWG
Operating Temperature	-40°C to +85°C
Dimensions (Inches)	1.8H x 2.9W x 5.3L
Weight	10 oz
Certifications	UL 1449 recognized

Installation

1. Mount HSP121BT-1RU in a UL approved housing.
2. Make sure wiring from power sources properly connects to LINE side of HSP. Wiring from protected equipment must properly connect to EQUIP side of HSP.
3. Connect only to 120 VAC, 15 Amp max., single phase, three-wire circuit.
4. Indication of internal failure:
   a. Indicator will extinguish.
   b. Fuse blown will disconnect load from power source.

Warning: *For continued protection against risk of fire, replace only with same type rating of fuse (3AB, 15A/250V).*

Dimensions

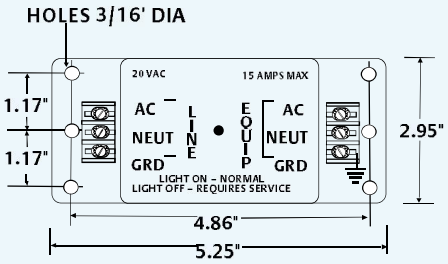

SIEMENS

Product data sheet 6ES7315-2AF03-0AB0

SIMATIC S7-300,
CPU 315-2 DP CPU WITH INTEGRATED 24 V DC POWER SUPPLY,
64 KBYTE WORKING MEMORY 2ND INTERFACE DP-MASTER/SLAVE

Supply voltage	
Rated voltage/DC	24 V
permissible range, lower limit (DC)	20.4 V
permissible range, upper limit (DC)	28.8 V
Input current	
Rated value at 24 V DC	1000 mA
Inrush current, max.	8000 A
Power losses	
Power loss, max.	8 W
Memory	
Work memory	
integrated	64 kbyte ; 64 KB / 21K instructions RAM (integrated)
integrated	64 kbyte ; 64 KB / 21K instructions RAM (integrated)
Load memory	
expandable FEPROM	Yes ; Flash-EPROM
expandable FEPROM, max.	4 Mbyte
expandable FEPROM, max.	4 Mbyte
Backup	
with battery	Yes ; all blocks
without battery	Yes ; 4 KB: bit memory, counter, times and data
CPU processing times	
for bit operations, min.	0.3 µs
for bit operations, max.	0.6 µs
for word operations, min.	1 µs

subject to modifications
© Copyright Siemens AG 2012

for fixed point arithmetic, min.	2 µs
for floating point arithmetic, min.	50 µs
for timer/counter operations, min.	12 µs
CPU-blocks	
DB	
Number, max.	255
FB	
Number, max.	192
FC	
Number, max.	192
OB	
Description	see instruction list
Number of free cycle OBs	1 ; OB 1
Number of time alarm OBs	1 ; OB 10
Number of time interrupt OBs	1 ; OB 35
Number of process alarm OBs	1 ; OB 40
Number of startup OBs	1 ; OB 100
Nesting depth	
per priority class	8 ; for each programming level
Counters, timers and their retentivity	
S7 counter	
Number	64
of which retentive with battery	
adjustable	Yes
lower limit	0
upper limit	63
of which retentive without battery	
adjustable	Yes
lower limit	0
upper limit	63
Counting range	
lower limit	1
upper limit	999

subject to modifications
© Copyright Siemens AG 2012

S7 times	
Number	128
of which retentive with battery	
adjustable	Yes
lower limit	0
upper limit	127
of which retentive without battery	
adjustable	Yes
lower limit	0
upper limit	127
Time range	
lower limit	10 ms
upper limit	9990 s
Data areas and their retentivity	
Flag	
Number, max.	256 byte
Number, max.	256 byte
Retentivity available	Yes ; MB 0 to MB 255
of which retentive with battery	0 to 2047 (M 0.0 to M 255.7, adjustable)
of which retentive without battery	0 to 2047 (M 0.0 to M 255.7, adjustable)
Address area	
I/O address area	
Inputs	1 kbyte
Inputs	1 kbyte
Outputs	1 kbyte
Outputs	1 kbyte
Process image	
Inputs	128 byte
Inputs	128 byte
Outputs	128 byte
Outputs	128 byte
Digital channels	
Inputs	8192

subject to modifications
© Copyright Siemens AG 2012

Outputs	8192
Inputs, of which central	1024
Outputs, of which central	1024
Analog channels	
Inputs	512
Outputs	512
Inputs, of which central	256
Outputs, of which central	128
Addressing volume	
Outputs	244 byte
Inputs	244 byte
Hardware configuration	
Modules per rack, max.	32
Expansion devices, max.	3
Connectable programming devices/PCs	PGs/PCs with STEP 7 connectable via MPI interface
Number of modules per DP slave interface, max.	64
Number of DP masters	
integrated	1
via CP	1 ; CP 342-5
Number of operable FMs and CPs (recommended)	
FM	8
CP, point-to-point	4
CP, LAN	2
Time of day	
Clock	
Hardware clock (real-time clock)	Yes
Interfaces	
MPI	
Cable length, max.	9100 m ; without repeaters: 50 m; with 2 repeaters: 1100 m; with 10 repeaters in series: 9100 m; via fiber optic cable: 23.8 km (with 16 star hubs or OLMs)
1st interface	
Functionality	
MPI	Yes

subject to modifications
© Copyright Siemens AG 2012

MPI	
Services	
PG/OP communication	Yes
Global data communication	Yes
S7 basic communication	Yes
S7 communication	Yes
Number of nodes, max.	32
Transmission rate, max.	187.5 kbit/s
2nd interface	
Functionality	
DP master	Yes
DP slave	Yes
DP master	
Services	
Equidistance mode support	Yes
Activation/deactivation of DP slaves	Yes
Direct data exchange (slave-to-slave communication)	Yes ; Transmitter and receiver
Number of DP slaves, max.	64
User data per DP slave	
User data per DP slave, max.	244 byte
Communication functions	
PG/OP communication	Yes
Global data communication	
supported	Yes
S7 basic communication	
supported	Yes
S7 communication	
supported	Yes
S5-compatible communication	
supported	Yes ; via loadable blocks
Standard communication (FMS)	
supported	Yes ; via loadable blocks
Number of connections	

subject to modifications
© Copyright Siemens AG 2012

overall	
of which dynamic	8
of which static	4
Configuration	
Configuration software	
STEP 7	Yes ; STEP 7 V5.0
programming	
Programming language	
LAD	Yes
FBD	Yes
STL	Yes
SCL	Yes
CFC	Yes
GRAPH	Yes
HiGraph®	Yes
Command set	Binary logic operations, bracketed operations, result allocation, saving, counting, loading, transferring, comparing, shifting, rotating, complementation, calling blocks, fixed point arithmetic, floating point arithmetic, jump functions
Nesting levels	8
Program organization	Linear, structured
Software libraries	
Process diagnostics	Yes
Software controller	Yes ; depending on the required memory space and the resulting execution time
System functions (SFC)	Interrupt and error processing, copy data, clock functions, diagnostic functions, module parameterization, operating mode transitions
Know-how protection	
User program protection/password protection	Yes
Cycle time monitoring	
lower limit	1 ms
upper limit	6000 ms
adjustable	Yes

subject to modifications
© Copyright Siemens AG 2012

preset	150 ms
Dimensions	
Width	80 mm
Height	125 mm
Depth	130 mm
Weight	
Weight, approx.	530 g ; Memory card 16 g
Status	Jan 5, 2012

subject to modifications
© Copyright Siemens AG 2012

© Siemens AG 2007

Overview

- Load current supplies for S7-300/ET 200M
- To convert the line voltage to the required operating voltage (24V DC)
- Output current 2 A, 5 A or 10 A

Technical specifications

Power supply, type	**2 A**	**2 A**	**5 A**	**5 A**	**10 A**
Order No.	**6ES7 307-1BA00-0AA0**	**6ES7 305-1BA80-0AA0**	**6ES7 307-1EA00-0AA0**	**6ES7 307-1EA80-0AA0**	**6ES7 307-1KA01-0AA0**
Order No. SIPLUS		**6AG1 305-1BA80-2AA0** 1)		**6AG1 307-1EA80-2AA0** 1)	
Input	Single-phase AC	DC voltage	Single-phase AC	Single-phase AC	Single-phase AC
Rated voltage $V_{in\ rated}$	**120/230 V AC** Set via switch on device	**24 V … 110 V DC** Wide-range input	**120/230 V AC** Set via switch on device	**120/230 V AC** Set via switch on device	**120/230 V AC** Set via switch on device
Voltage range	85 … 132 V AC/ 170 … 264 V AC	16.8 … 138 V DC	85 … 132 V AC/ 170 … 264 V AC	93 … 132 V AC/ 187 … 264 V AC	85 … 132 V AC/ 170 … 264 V AC
Overvoltage resistance	2.3 x Vin_{rated}, 1.3 ms	154 V; 0.1 s	2.3 x $V_{inrated}$, 1.3 ms	2.3 x $V_{inrated}$, 1.3 ms	2.3 x $V_{inrated}$, 1.3 ms
Line buffering at $I_{out\ rated}$	> 20 ms at V_{in} = 93/187 V	> 10 ms at $V_{in\ rated}$	> 20 ms at V_{in} = 93/187 V	> 20 ms at V_{in} = 93/187 V	> 20 ms at V_{in} = 93/187 V
Rated line frequency; rated line-frequency range	50/60 Hz, 47 to 63 Hz	-	50/60 Hz; 47 Hz to 63 Hz	50/60 Hz, 47 Hz to 63 Hz	50/60 Hz, 47 Hz to 63 Hz
Rated current $I_{in\ rated}$	0.9/0.6 A	2.7 … 0.6 A (4 … 0.9 A)	2.1/1.3 A	2.1/1.2 A	4.1/1.8 A
Switch-on current limit (+25 °C)	< 20 A, < 3 ms	< 20 A, < 10 ms	< 45 A, < 3 ms	< 45 A, < 3 ms	< 55 A, < 3 ms
I^2t	< 1.0 A^2s	< 5 A^2s	< 1.2 A^2s	< 1.8 A^2s (typ. 1.2 A^2s)	< 3.3 A^2s
Built-in line-side fuse	T 1.6 A/250 V (inaccessible)	T 6.3 A/250 V (inaccessible)	F 4 A/250 V (inaccessible)	T 3.15 A/250 V (inaccessible)	T 6.3 A/250 V (inaccessible)
Recommended miniature circuit-breaker (IEC 898) in the supply line	3 A, Characteristic C	At and above 10 A, C characteristic, suitable for DC	At and above 6 A, C characteristic	at and above 10 A, Characteristic C or at and above 6 A, Characteristic D	At and above 10 A, C characteristic
Output	Controlled, isolated DC voltage	Controlled, isolated DC voltage	Controlled, isolated DC voltage	Controlled, isolated DC voltage	Controlled, isolated DC voltage
Rated voltage $V_{out\ rated}$	**24 V DC**	**24 V DC**	**24 V DC**	**24 V DC**	**24 V DC**
Total tolerance	± 3 %	± 3 %	± 3 %	± 3 %	± 3 %
• Static line smoothing	approx. 0.1 %	approx. 0.2 %	approx. 0.1 %	approx. ± 0.2 %	approx. 0.1%
• Static load smoothing	approx. 0.2 %	approx. 0.4 %	approx. 0.2 %	approx. ± 0.4 %	approx. 0.5%
Ripple content (clock frequency: approx. 50 kHz; approx. 70 kHz with 6ES7 307-1BA00-0AA0)	< 150 mV_{pp} (typ. < 20 mV_{pp})	< 150 mV_{pp} (typ. < 30 mV_{pp})	< 150 mV_{pp} (typ. 40 mV_{pp})	< 150 mV_{pp} (typ. 40 mV_{pp})	< 150 mV_{pp} (typ. 40 mV_{pp})
Spikes (bandwidth: 20 MHz)	< 240 mV_{pp} (typ. < 150 mV_{pp})	< 240 mV_{pp} (typ. < 150 mV_{pp})	< 240 mV_{pp} (typ. 90 mV_{pp})	< 240 mV_{pp} (typ. 90 mV_{pp})	< 240 mV_{pp} (typ. 100 mV_{pp})
Adjustment range	-	-	-	-	-

1) SIPLUS module for temperature range -25 … +60°C and use under medial load (e.g. sulphur chloride atmosphere).
This SIPLUS power supply conforms with standards for electronic equipment used on rolling stock (EN 50155, temperature T1, category 1).

Technical specifications (continued)

Order No.	6ES7 307-1BA00-0AA0	6ES7 305-1BA80-0AA0	6ES7 307-1EA00-0AA0	6ES7 307-1EA80-0AA0	6ES7 307-1KA01-0AA0
Order No. SIPLUS		**6AG1 305-1BA80-2AA0** [1]		**6AG1 307-1EA80-2AA0** [1]	
Status indicator	Green LED for 24 V OK	Green LED for 24 V OK	Green LED for 24 V OK	Green LED for 24 V OK	Green LED for 24 V OK
Response on activation/deactivation	No overshoot of V_{out} (soft start)	No overshoot of V_{out} (soft start)	No overshoot of V_{out} (soft start)	No overshoot of V_{out} (soft start)	No overshoot of V_{out} (soft start)
Startup delay/ voltage rise	< 3 s/typ.60 ms	< 3 s (typ.7 ms)/ typ. 5 ms	< 2 s (typ.60 ms)	< 3 s/typ.100 ms	< 1.5 s/typ.80 ms
Rated current $I_{out\ rated}$	**2 A**	**2 A (3 A with Vin > 24 V)**	**5 A**	**5 A**	**10 A**
Current range					
• Up … +45 °C	0 A … 2 A	0 … 2 A (3 A)	0 A … 5 A	0 A … 5 A	0 A … 10 A
• Up … +60 °C	0 A … 2 A	0 … 3 A (3 A)	0 A … 5 A	0 A … 5 A	0 A … 10 A
Dynamic V/I at					
• Power-up on short-circuit	typ. 10 A for 90 ms	typ. 9 A for 270 ms	typ. 20 A for 75 ms	typ. 20 A for 180 ms	typ. 35 A for 80 ms
• Short-circuit during operation	typ. 10 A for 90 ms	typ. 9 A for 270 ms	typ. 20 A for 75 ms	typ. 20 A for 80 ms	typ. 35 A for 150 ms
Parallel switching for enhanced performance	not permissible	Yes, 2 units	not permissible	not permissible	not permissible
Efficiency					
Efficiency at $V_{out\ rated}$, $I_{out\ rated}$	approx. 83 %	approx. 75 %	approx. 87 %	approx. 84 %	approx. 87 %
Power loss at $V_{out\ rated}$, $I_{out\ rated}$	approx. 10 W	approx. 16 W (24 W)	approx. 18 W	approx. 23 W	approx. 34 W
Closed-loop control					
Dynamic line smoothing ($V_{in\ rated}$ ±15 %)	±0.3 % V_{out}	±0.3 % V_{out}	±0.3 % V_{out}	±0.3 % V_{out}	±0.3 % V_{out}
Dynamic load smoothing (I_{out}: 50/100/50 %)	±0.8 % V_{out}	±2.5 % V_{out}	±2.5 % V_{out}	±3 % V_{out}	±2.5 % V_{out}
Load-step settling time					
• 50 at 100 %	< 5 ms (typ. 2.5 ms)	< 5 ms (typ. 2.5 ms)	typ. 0.1 ms	< 5 ms (typ. 0.2 ms)	< 5 ms
• 100 at 50%	< 5 ms (typ. 2.5 ms)	< 5 ms (typ. 2.5 ms)	Typ. 0.1 ms	< 5 ms (typ. 0.2 ms)	< 5 ms
Protection and monitoring					
Output overvoltage protection	Additional control loop, shutdown at approx. 30 V, automatic restart	Additional control loop, shutdown at approx. 30 V, automatic restart	Additional control loop, shutdown at approx. 30 V, automatic restart	Additional control loop, shutdown at approx. 30 V, automatic restart	Additional control loop, shutdown at approx. 30 V, automatic restart
Current limit	2.2 A … 2.6 A	3.3 A … 3.9 A	5.5 A … 6.5 A	5.5 A … 6.5 A	11 A … 12 A
Short-circuit protection	Electronic shutdown, automatic restart	Electronic shutdown, automatic restart	Electronic shutdown, automatic restart	Electronic shutdown, automatic restart	Electronic shutdown, automatic restart
Sustained-short-circuit-current rms value	< 4 A	< 2 A	< 9 A	< 5 A	< 10 A
Overload/short-circuit indicator	-	-	-	-	-
Safety					
Primary/secondary galvanic isolation	Yes, safety extra-low output voltage V_{out} to EN 60950 and EN 50178	Yes, safety extra-low output voltage V_{out} to EN 60950 and EN 50178, creepages and clearances > 5 mm	Yes, safety extra-low output voltage V_{out} to EN 60950 and EN 50178	Yes, safety extra-low output voltage V_{out} to EN 60950 and EN 50178, creepages and clearances > 8 mm	Yes, safety extra-low output voltage V_{out} to EN 60950 and EN 50178
Protection class	Class I	Class I	Class I	Class I	Class I
Leakage current	< 3.5 mA (typ. 0.7 mA)	< 3.5 mA (typ. 0.7 mA)	< 3.5 mA (typ. 0.3 mA)	< 3.5 mA (typ. 0.3 mA)	< 3.5 mA (typ. 0.5 mA)

1) SIPLUS module for temperature range -25 … +60°C and use under medial load (e.g. sulphur chloride atmosphere).
This SIPLUS power supply conforms with standards for electronic equipment used on rolling stock (EN 50155, temperature T1, category 1).

© Siemens AG 2007

Technical specifications (continued)

Order No.	6ES7 307-1BA00-0AA0	6ES7 305-1BA80-0AA0	6ES7 307-1EA00-0AA0	6ES7 307-1EA80-0AA0	6ES7 307-1KA01-0AA0
Order No. SIPLUS		**6AG1 305-1BA80-2AA0** 1)		**6AG1 307-1EA80-2AA0** 1)	
German Technical Inspectorate approval	Yes	Yes	Yes	Yes	Yes
CE label	Yes	Yes	Yes	Yes	Yes
UL/cUL (CSA) approval	Yes, UL-listed (UL 508) File E143289, CSA (CSA22.2 No. 14-95)	Yes, UL-listed (UL 508), file E143289, CSA (CSA22.2 no. 14-95)	Yes, UL-listed (UL 508), file E143289, CSA (CSA 22.2 no. 14-95)	Yes, UL-Listed (UL 508) File E143289, CSA (CSA22.2 No. 14-95)	Yes, UL-listed (UL 508), file E143289, CSA (CSA22.2 no. 14-95)
FM approval	Yes, Class I Div. 2 Group A, B, C, D T4	-	Yes, Class I Div. 2 Group A, B, C, D, T 4	-	Yes, Class I Div. 2, A, B, C, D, T4
Marine type approval	in S7-300 system	Yes, GL, LRS	in S7-300 system	Yes, GL, LRS	in S7-300 system
Degree of protection (EN 60529)	IP20	IP20	IP20	IP20	IP20
EMC					
Emitted interference	EN 55022 Class B	EN 55011 Class A	EN 55022 Class B	EN 55011 Class A	EN 55022 Class B
Supply-harmonics limitation	Not applicable	Not applicable	EN 61000-3-2	-	EN 61000-3-2
Noise immunity	EN 61000-6-2	EN 61000-6-2	EN 61000-6-2	EN 61000-6-2	EN 61000-6-2
Operating data					
Ambient temperature range	0°C … +60°C with natural convection	-25°C … +70°C with natural convection	0°C … +60°C with natural convection	-25°C … +70°C with natural convection	0°C … +60°C with natural convection
Transport/storage temperature range	-40 °C … +85 °C	- 40 … + 85 °C	-40 °C … +85 °C	- 40 … + 85 °C	- 40 … + 85 °C
Humidity class	Climate class 3K3 to EN 60721, no condensation	Climate class 3K5 to EN 60721, transient condensation permitted	Climate class 3K3 to EN 60721, no condensation	Climate class 3K5 to EN 60721, transient condensation permitted	Climate class 3K3 to EN 60721, no condensation
Mechanical system					
Ports					
• Supply input L, N, PE (DC input: L+1, M1, PE)	Solid/finely-stranded per screw-type terminal for 0.5 mm to 2.5 mm^2	Solid/finely-stranded per screw-type terminal for 0.5 mm to 2.5 mm^2	Solid/finely-stranded per screw-type terminal for 0.5 mm to 2.5 mm^2	Solid/finely-stranded per screw-type terminal for 0.5 mm to 2.5 mm^2	Solid/finely-stranded per screw-type terminal for 0.5 mm to 2.5 mm^2
• Output L+	2 screw-type terminals for 0.5 mm to 2.5 mm^2	3 screw-type terminals for 0.5 mm to 2.5 mm^2	3 screw-type terminals for 0.5 mm to 2.5 mm^2	3 screw-type terminals for 0.5 mm to 2.5 mm^2	4 screw-type terminals for 0.5 mm to 2.5 mm^2
• Output M	2 screw-type terminals for 0.5 mm to 2.5 mm^2	3 screw-type terminals for 0.5 mm to 2.5 mm^2	3 screw-type terminals for 0.5 mm to 2.5 mm^2	3 screw-type terminals for 0.5 mm to 2.5 mm^2	4 screw-type terminals for 0.5 mm to 2.5 mm^2
Dimensions (W x H x D) in mm	50 x 125 x 120	80 x 125 x 120	80 x 125 x 120	80 x 125 x 120	120 x 125 x 120
Weight, approx.	0.42 kg	0.75 kg	0.74 kg	0.57 kg	1.1 kg
Assembly	Snaps onto S7 busbar	Snaps onto S7 busbar	Snaps onto S7 busbar	Snaps onto S7 busbar	Snaps onto S7 busbar
Accessories	Mounting adapter for DIN rail and PS-CPU power connector	Mounting adapter for DIN rail and PS-CPU power connector	Mounting adapter for DIN rail and power connector	Mounting adapter for DIN rail and power connector	Mounting adapter for DIN rail and PS-CPU power connector

1) SIPLUS module for temperature range -25 … +60°C and use under medial load (e.g. sulphur chloride atmosphere).
This SIPLUS power supply conforms with standards for electronic equipment used on rolling stock (EN 50155, temperature T1, category 1).

© Siemens AG 2007

Ordering data

	Order No.
PS 305/307 load power supply	
incl. power connector	
120/230 V AC / 24 V DC; 2 A	**6ES7 307-1BA00-0AA0**
24 … 110 V DC / 24 V DC; 2 A, for extended temperature range	**6ES7 305-1BA80-0AA0**
120/230 V AC / 24 V DC; 5 A	**6ES7 307-1EA00-0AA0**
120/230 V AC / 24 V DC; 5 A, for extended temperature range	**6ES7 307-1EA80-0AA0**
120/230 V AC / 24 V DC; 10 A	**6ES7 307-1KA01-0AA0**

	Order No.
SIPLUS load power supply PS 305/307	
for temperature range -25 … +60°C and use under medial load (e.g. sulphur chloride atmosphere). Conforms with standard for electronic equipment used on rolling stock (EN 50155, temperature T1, category 1).	
24 … 110 V DC / 24 V DC; 2 A	**6AG1 305-1BA80-2AA0**
120/230 V AC / 24 V DC; 5 A	**6AG1 307-1EA80-2AA0**
Installation adapter	**6ES7 390-6BA00-0AA0**
For snapping the PS 307 onto a 35 mm DIN rail (EN 50022)	
PS-CPU power connector	**6ES7 390-7BA00-0AA0**
Spare part	

DIN Rail

Overview

- The mechanical mounting rack of the SIMATIC S7-300
- For accommodating the modules
- Can be screwed onto the wall

Ordering data

	Order No.
DIN rail	
160 mm	**6ES7 390-1AB60-0AA0**
482 mm	**6ES7 390-1AE80-0AA0**
530 mm	**6ES7 390-1AF30-0AA0**
830 mm	**6ES7 390-1AJ30-0AA0**
2000 mm	**6ES7 390-1BC00-0AA0**

© Siemens AG 2007

Ordering data

	Order No.
PS 305/307 load power supply	
incl. power connector	
120/230 V AC / 24 V DC; 2 A	**6ES7 307-1BA00-0AA0**
24 … 110 V DC / 24 V DC; 2 A, for extended temperature range	**6ES7 305-1BA80-0AA0**
120/230 V AC / 24 V DC; 5 A	**6ES7 307-1EA00-0AA0**
120/230 V AC / 24 V DC; 5 A, for extended temperature range	**6ES7 307-1EA80-0AA0**
120/230 V AC / 24 V DC; 10 A	**6ES7 307-1KA01-0AA0**

	Order No.
SIPLUS load power supply PS 305/307	
for temperature range -25 … +60°C and use under medial load (e.g. sulphur chloride atmosphere). Conforms with standard for electronic equipment used on rolling stock (EN 50155, temperature T1, category 1).	
24 … 110 V DC / 24 V DC; 2 A	**6AG1 305-1BA80-2AA0**
120/230 V AC / 24 V DC; 5 A	**6AG1 307-1EA80-2AA0**
Installation adapter	**6ES7 390-6BA00-0AA0**
For snapping the PS 307 onto a 35 mm DIN rail (EN 50022)	
PS-CPU power connector	**6ES7 390-7BA00-0AA0**
Spare part	

DIN Rail

Overview

- The mechanical mounting rack of the SIMATIC S7-300
- For accommodating the modules
- Can be screwed onto the wall

Ordering data

	Order No.
DIN rail	
160 mm	**6ES7 390-1AB60-0AA0**
482 mm	**6ES7 390-1AE80-0AA0**
530 mm	**6ES7 390-1AF30-0AA0**
830 mm	**6ES7 390-1AJ30-0AA0**
2000 mm	**6ES7 390-1BC00-0AA0**

© Siemens AG 2007

SM 321 digital input modules

Overview

- Digital inputs
- For connecting standard switches and two-wire proximity switches (BERO)

Technical specifications

	6ES7 321-1BH02-0AA0	6ES7 321-1BH50-0AA0	6ES7 321-1BL00-0AA0	6ES7 321-1BH10-0AA0
Voltages and currents				
Load voltage L+				
• Rated value (DC)	24 V	24 V	24 V	24 V
Current consumption				
from load voltage L+ (without load), max.	25 mA			
from backplane bus DC 5 V, max.	10 mA	10 mA	15 mA	110 mA
Power loss, typ.	3.5 W	3.5 W	6.5 W	3.8 W
Connection point				
required front connectors	20-pin	20-pin	40-pin	20-pin
Isochronous mode				
Isochronouos mode	No	No	No	Yes
Digital inputs				
Number of digital inputs	16	16	32	16
Number of simultaneously controllable inputs				
• vertical installation				
- up to 40 °C, max.	16	16	32	16
• horizontal installation				
- up to 40 °C, max.			32	
- up to 60 °C, max.	16	16	16	16
Cable length				
• Cable length, shielded, max.	1,000 m	1,000 m	1,000 m	1,000 m
• Cable length unshielded, max.	600 m	600 m	600 m	600 m
Input characteristic curve to IEC 1131, type 1	Yes	Yes	Yes	Yes
Input voltage				
• Rated value, DC	24 V	24 V	24 V	24 V
• for signal "0"	-30 V to 5 V	30 V to -5V	-30 to 5 V	-30 V to 5 V
• for signal "1"	13 to 30 V	-13 to -30 V	13 to 30 V	13 to 30 V
Input current				
• for signal "1", typ.	7 mA	7 mA	7 mA	7 mA

© Siemens AG 2007

Technical specifications (continued)

	6ES7 321-1BH02-0AA0	6ES7 321-1BH50-0AA0	6ES7 321-1BL00-0AA0	6ES7 321-1BH10-0AA0
Digital inputs				
Input delay (for rated value of input voltage)				
• for standard inputs				
- at "0" to "1", min.	1.2 ms	1.2 ms	1.2 ms	25 µs
- at "0" to "1", max.	4.8 ms	4.8 ms	4.8 ms	75 µs
Encoder				
Connectable encoders				
• 2-wire BEROS	Yes	Yes	Yes	Yes
• permissible quiescent current (2-wire BEROS), max.	1.5 mA	1.5 mA	1.5 mA	1.5 mA
Status information/ alarms/diagnostics				
Alarms				
• Alarms	No	No	No	No
Diagnoses				
• Diagnostic functions	No	No	No	No
Diagnostics indication LED				
• Status indicator digital input (green)	Yes	Yes	Yes	Yes
Isolation				
Isolation checked with	500 V DC	500 V DC	500 V DC	500 V DC
Isolation				
Galvanic isolation, digital inputs				
• between the channels			Yes	
• between the channels, in groups of	16	16	16	16
• between the channels and the backplane bus	Yes; Optocoupler	Yes; Optocoupler	Yes; Optocoupler	Yes; Optocoupler
Dimensions and weight				
Width	40 mm	40 mm	40 mm	40 mm
Height	125 mm	125 mm	125 mm	125 mm
Depth	120 mm	120 mm	120 mm	120 mm
Weights				
Weight, approx.	200 g	200 g	260 g	200 g

	6ES7 321-7BH01-0AB0	6ES7 321-1CH00-0AA0	6ES7 321-1CH20-0AA0	6ES7 321-1FH00-0AA0
Voltages and currents				
Load voltage L+				
• Rated value (DC)	24 V	24 V	48 V	
Load voltage L1				
• Rated value (AC)		24 V		230 V; 120/230 V AC; all load voltages must have the same phase.
Current consumption				
from load voltage L+ (without load), max.	90 mA			
from backplane bus DC 5 V, max.	130 mA	100 mA	40 mA	29 mA
Power loss, typ.	4 W	1.5 W	4.3 W	4.9 W
Connection point				
required front connectors	20-pin	40-pin	20-pin	20-pin

© Siemens AG 2007

Technical specifications (continued)

	6ES7 321-7BH01-0AB0	6ES7 321-1CH00-0AA0	6ES7 321-1CH20-0AA0	6ES7 321-1FH00-0AA0
Isochronous mode				
Isochronouos mode	Yes	No	No	No
Digital inputs				
Number of digital inputs	16	16	16	16
Number of simultanneously controllable inputs				
• vertical installation				
- up to 40 °C, max.	16	16	8	16
• horizontal installation				
- up to 50 °C, max.			8	
- up to 60 °C, max.	16	16	8; 6 to Ue 146 V	16
Cable length				
• Cable length, shielded, max.	1,000 m	1,000 m	1,000 m	1,000 m
• Cable length unshielded, max.	600 m	600 m	600 m	600 m
Input characteristic curve to IEC 1131, type 1		Yes	Yes	Yes
Input characteristic curve to IEC 1131, type 2	Yes			
Input voltage				
• Rated value, AC		24 V; AC 24 or 48 V		230 V; 120/230 V AC
• Rated value, DC	24 V	24 V; DC 24 or 48 V	48 V; DC 48 to 125 V	
• for signal "0"	-30V to 5 V	-5 to 5 V AC	-146 V to 15 V DC	0 to 40 V
• for signal "1"	13 to 30 V	14 to 60 V AC	30 to 146 V DC	85 to 264 V
• Frequency range		0 to 63 Hz		47 to 63 Hz
Input current				
• for signal "1", typ.	7 mA	2.7 mA	3.5 mA	8 mA; (120V, 60Hz), 16mA (230V, 50Hz)
Input delay (for rated value of input voltage)				
• for standard inputs				
- programmable	Yes; 0.1 / 0.5 / 3 / 15 / 20 ms	No		No
- at "0" to "1", min.			0.1 ms	
- at "0" to "1", max.		16 ms	3.5 ms	25 ms
Encoder				
Connectable encoders				
• 2-wire BEROS	Yes	Yes	Yes	Yes
• permissible quiescent current (2-wire BEROS), max.	2 mA	1 mA	1 mA	2 mA
Status information/ alarms/diagnostics				
Alarms				
• Alarms	Yes	No	No	No
• Diagnostic alarm	Yes; parameterizable	No	No	No
• Process alarm	Yes; parameterizable	No	No	No
Diagnoses				
• Diagnostic functions	Yes; parameterizable	No	No	No
Diagnostics indication LED				
• Status indicator digital input (green)	Yes	Yes	Yes	Yes

© Siemens AG 2007

Technical specifications (continued)

	6ES7 321-7BH01-0AB0	6ES7 321-1CH00-0AA0	6ES7 321-1CH20-0AA0	6ES7 321-1FH00-0AA0
Isolation				
Isolation checked with	500 V DC	1500 V AC	1500 V DC	4000 V DC
Isolation				
Galvanic isolation, digital inputs				
• between the channels		Yes	Yes	Yes
• between the channels, in groups of	16	1	8	4
• between the channels and the backplane bus	Yes; Optocoupler	Yes; Optocoupler	Yes; Optocoupler	Yes; Optocoupler
Dimensions and weight				
Width	40 mm	40 mm	40 mm	40 mm
Height	125 mm	125 mm	125 mm	125 mm
Depth	120 mm	120 mm	120 mm	120 mm
Weights				
Weight, approx.	200 g	260 g	200 g	240 g

	6ES7 321-1EL00-0AA0	6ES7 321-1FF01-0AA0	6ES7 321-1FF10-0AA0
Voltages and currents			
Load voltage L1			
• Rated value (AC)	120 V	230 V; 120V/230V AC	230 V; 120/230 V AC; all load voltages must have the same phase.
Current consumption			
from backplane bus DC 5 V, max.	16 mA	29 mA	100 mA
Power loss, typ.	4 W	4.9 W	4.9 W
Connection point			
required front connectors	40-pin	20-pin	40-pin
Isochronous mode			
Isochronouos mode	No	No	No
Digital inputs			
Number of digital inputs	32	8	8
Number of simultaneously controllable inputs			
• vertical installation - up to 40 °C, max.	32	8	8
• horizontal installation - up to 40 °C, max.	32		
- up to 60 °C, max.	24	8	8
Cable length			
• Cable length, shielded, max.	1,000 m	1,000 m	1,000 m
• Cable length unshielded, max.	600 m	600 m	600 m
Input characteristic curve to IEC 1131, type 1		Yes	Yes
Input characteristic curve to IEC 1131, type 2	Yes		
Input voltage			
• Rated value, AC	120 V	230 V; 120/230 V AC	120 V; 120/230 V AC
• for signal "0"	0 to 20 V	0 to 40 V	0 to 40 V
• for signal "1"	74 to 132 V	85 to 264 V	85 to 264 V
• Frequency range	47 to 63 Hz	47 to 63 Hz	47 to 63 Hz

© Siemens AG 2007

Ordering data

		Order No.
SM 321 digital input modules		
incl. labeling strips, bus connector		
16 inputs, 24 V DC		**6ES7 321-1BH02-0AA0**
16 inputs, 24 V DC, active low		**6ES7 321-1BH50-0AA0**
32 inputs, 24 V DC		**6ES7 321-1BL00-0AA0**
16 inputs, 24 … 48 V DC	A)	**6ES7 321-1CH00-0AA0**
16 inputs, 48 … 125 V DC	A)	**6ES7 321-1CH20-0AA0**
16 inputs, 24 V DC, for isochronous mode		**6ES7 321-1BH10-0AA0**
32 inputs, 120 V AC	A)	**6ES7 321-1EL00-0AA0**
8 inputs, 120/230 V AC	A)	**6ES7 321-1FF01-0AA0**
8 inputs, 120/230 V AC, single root	A)	**6ES7 321-1FF10-0AA0**
16 inputs, 120/230 V AC	A)	**6ES7 321-1FH00-0AA0**
16 inputs, 24 V DC, for isochronous mode, diagnostics-capable		**6ES7 321-7BH01-0AB0**
Front connectors		
20-pin, with screw contacts		
• 1 unit		**6ES7 392-1AJ00-0AA0**
• 100 units		**6ES7 392-1AJ00-1AB0**
20-pin, with cage clamp contacts		
• 1 unit		**6ES7 392-1BJ00-0AA0**
• 100 units		**6ES7 392-1BJ00-1AB0**
40-pin, with screw contacts		
• 1 unit		**6ES7 392-1AM00-0AA0**
• 100 units		**6ES7 392-1AM00-1AB0**
40-pin with cage clamp contacts		
• 1 unit		**6ES7 392-1BM01-0AA0**
• 100 units		**6ES7 392-1BM01-1AB0**
SIMATIC TOP connect		See page 4/225; Information about which components can be used for the respective module, see A&D Mall or Catalog KT 10.2
Bus connectors		**6ES7 390-0AA00-0AA0**
1 unit (spare part)		
Labeling strips		
10 units (spare part)		
for modules with 20-pin front connector		**6ES7 392-2XX00-0AA0**
for modules with 40-pin front connector		**6ES7 392-2XX10-0AA0**
Label cover		
10 units (spare part)		
for modules with 20-pin front connector		**6ES7 392-2XY00-0AA0**
for modules with 40-pin front connector		**6ES7 392-2XY10-0AA0**

A) Subject to export regulations: AL: N and ECCN: EAR99H

D) Subject to export regulations: AL: N and ECCN: 5D992B1

		Order No.
S7 SmartLabel		
Software for automatic labeling of modules based on data of the STEP 7 project		**2XV9 450-1SL01-0YX0**
Labeling sheets for machine inscription		
for 16-channel signal modules, DIN A4, for printing with laser printer; 10 units		
petrol		**6ES7 392-2AX00-0AA0**
light-beige		**6ES7 392-2BX00-0AA0**
yellow		**6ES7 392-2CX00-0AA0**
red		**6ES7 392-2DX00-0AA0**
for 32-channel signal modules, DIN A4, for printing with laser printer; 10 units		
petrol		**6ES7 392-2AX10-0AA0**
light-beige		**6ES7 392-2BX10-0AA0**
yellow		**6ES7 392-2CX10-0AA0**
red		**6ES7 392-2DX10-0AA0**
SIMATIC Manual Collection	D)	**6ES7 998-8XC01-8YE0**
Electronic manuals on DVD, multilingual: S7-200, S7-300, C7, S7-400, SIMATIC DP (Distributed I/O), SIMATIC PC, SIMATIC PG, STEP 7, Engineering Tools, Runtime Software, SIMATIC PCS 7, SIMATIC HMI (Human Machine Interface), SIMATIC NET (Industrial Communication), SIMATIC Machine Vision, SIMATIC Sensors		
SIMATIC Manual Collection update service for 1 year	D)	**6ES7 998-8XC01-8YE2**
Current S7 Manual Collection DVD and the three subsequent updates		
S7-300 manual		
Design, CPU data, module data, instruction list		
German		**6ES7 398-8FA10-8AA0**
English		**6ES7 398-8FA10-8BA0**
French		**6ES7 398-8FA10-8CA0**
Spanish		**6ES7 398-8FA10-8DA0**
Italian		**6ES7 398-8FA10-8EA0**

© Siemens AG 2007

SM 322 digital output modules

Overview

- Digital outputs
- For connecting solenoid valves, contactors, low-power motors, lamps and motor starters

Technical specifications

	6ES7 322-1BH01-0AA0	6ES7 322-1BH10-0AA0	6ES7 322-1BL00-0AA0	6ES7 322-8BF00-0AB0	6ES7 322-5GH00-0AB0	6ES7 322-1CF00-0AA0
Voltages and currents						
Load voltage L+						
• Rated value (DC)	24 V	24 V	24 V	24 V	24 V; 24/48	48 V; 48 to 125 V DC
Current consumption						
from load voltage L+ (without load), max.	80 mA	110 mA	160 mA	90 mA	200 mA	2 mA
from backplane bus DC 5 V, max.	80 mA	70 mA	110 mA	70 mA	100 mA	100 mA
Power loss, typ.	4.9 W	5 W	6.6 W	5 W	2.8 W	7.2 W
Connection point						
required front connectors	20-pin	20-pin	40-pin	20-pin	40-pin	20-pin
Digital outputs						
Number of digital outputs	16	16	32	8	16	8
Cable length, shielded, max.	1,000 m	1,000 m	1,000 m	1,000 m	1,000 m	1,000 m
Cable length unshielded, max.	600 m	600 m	600 m	600 m	600 m	600 m
Short-circuit protection of the output	Yes; electronic	Yes; electronic	Yes; electronic	Yes; electronic	No; to be provided externally	Yes; electronic
Limitation of inductive shutdown voltage to	L+ (-53 V)	L+ (-53 V)	L+ (-53 V)	L+ (-45 V)		M (-1V)
Lamp load, max.	5 W	5 W	5 W	5 W	2.5 W	15 W; 15 W (48 V) or 40 W (125 V)
Output voltage						
• for signal "1", min.	L+ (-0.8 V)	L+ (-0.8 V)	L+ (-0.8 V)	L+ (-0.8 V to -1.6 V)	L+ (-0.25 V)	L+ (-1.2 V)
Output current						
• for signal "1" rated value	0.5 A	0.5 A	0.5 A	0.5 A	0.5 A	1.5 A
• for signal "1" permissible range for 0 to 40 °C, min.	5 mA	5 mA	5 mA	10 mA		10 mA
• for signal "1" permissible range for 0 to 40 °C, max.	0.6 A	0.6 A	0.6 A	0.6 A		1.5 A
• for signal "1" permissible range for 40 to 60 °C, min.	5 mA	5 mA	5 mA	10 mA		10 mA
• for signal "1" permissible range for 40 to 60 °C, max.	0.6 A	0.6 A	0.6 A	0.6 A		1.5 A

© Siemens AG 2007

Technical specifications (continued)

	6ES7 322-1BF01-0AA0	6ES7 322-1FF01-0AA0	6ES7 322-5FF00-0AB0	6ES7 322-1FH00-0AA0	6ES7 322-1FL00-0AA0	6ES7 322-1HF01-0AA0
Aggregate current of the outputs (per group)						
• horizontal installation						
- up to 40 °C, max.		4 A	8 A	4 A	4 A	
- up to 60 °C, max.	4 A	2 A	4 A	2 A	3 A	
Relay outputs						
Rated input voltage of relay L+ (DC)						24 V; 110 mA
Number of operating cycles						300,000; 230 V AC: 100000, 120 V AC: 200000, 24 V DC: 300000 (at 2 A)
Switching capacity of the contacts						
• with inductive load, max.						2 A; 2 A (230 V AC), 2 A (24 V DC)
• with resistive load, max.						2 A
Status information/ alarms/diagnostics						
Alarms						
• Diagnostic alarm	No	No	Yes; parameterizable	No	No	No
Diagnoses						
• Diagnostics	No	Yes	Yes; Off / last value / substitute value	Yes	Yes	No
Isolation						
Isolation checked with	500 V DC	1500 V AC	1500 V AC	4000 V DC	4000 V DC	1500 V AC
Isolation						
Isolation, digital outputs						
• between the channels, in groups of	4	4	1	8	8	2
• between the channels and the backplane bus	Yes; Optocoupler	Yes; Optocoupler	Yes; Optocoupler	Yes; Optocoupler	Yes; Optocoupler	Yes; Optocoupler
Dimensions and weight						
Width	40 mm	40 mm	40 mm	40 mm	80 mm	40 mm
Height	125 mm	125 mm	125 mm	125 mm	125 mm	125 mm
Depth	120 mm	120 mm	120 mm	120 mm	117 mm	120 mm
Weights						
Weight, approx.	190 g	275 g	275 g	275 g	500 g	190 g

	6ES7 322-1HF10-0AA0	6ES7 322-5HF00-0AB0	6ES7 322-1HH01-0AA0
Voltages and currents			
Load voltage L+			
• Rated value (DC)	120 V	24 V	120 V
Load voltage L1			
• Rated value (AC)	230 V	230 V	230 V
Current consumption			
from backplane bus DC 5 V, max.	40 mA	100 mA	100 mA
Power loss, typ.	4.2 W	3.5 W	4.5 W
Connection point			
required front connectors	40-pin	40-pin	20-pin

© Siemens AG 2007

Technical specifications (continued)

	6ES7 322-1HF10-0AA0	6ES7 322-5HF00-0AB0	6ES7 322-1HH01-0AA0
Digital outputs			
Number of digital outputs	8; Relay	8; Relay	16; Relay
Cable length, shielded, max.	1,000 m	1,000 m	1,000 m
Cable length unshielded, max.	600 m	600 m	600 m
Short-circuit protection of the output	No; to be provided externally	No; to be provided externally	
Lamp load, max.	1,500 W; AC 230 V	1,500 W; AC 230 V	50 W; AC 230 V
Output current			
• for signal "1" minimum load current	5 mA	10 mA	10 mA
Switching frequency			
• with resistive load, max.	2 Hz	2 Hz	1 Hz
• with inductive load, max.	0.5 Hz	0.5 Hz	0.5 Hz
• on lamp load, max.	2 Hz	2 Hz	1 Hz
• mechanical, max.	10 Hz	10 Hz	10 Hz
Aggregate current of the outputs (per group)			
• vertical installation - up to 40 °C, max.	5 A	5 A	8 A
• horizontal installation - up to 60 °C, max.	5 A	5 A	8 A
Relay outputs			
Rated input voltage of relay L+ (DC)	24 V		24 V
Number of operating cycles	300,000; 300000 (DC 24 V, at 2 A), 200000 (AC 120 V, at 3 A), 100000 (AC 230 V, at 3 A)	100,000; 100,000 (DC 24 V, at 5 A), 100,000 (AC 230 V, at 5 A)	100,000; 50000 (24 V DC, at 2 A), 700000 (120 V AC, at 2 A), 100000 (230 V AC, at 2 A)
Switching capacity of the contacts			
• with inductive load, max.	3 A; 3 A (230 V AC), 2 A (24 V DC)	5 A; 5 A (230 V AC), 5 A (24 V DC)	2 A; 2 A (230 V AC), 2 A (24 V DC)
• with resistive load, max.	8 A; 8 A (230 V AC), 5 A (24 V DC)	5 A; 5 A (230 V AC), 5 A (24 V DC)	2 A; 2 A (230 V AC), 2 A (24 V DC)
Status information/ alarms/diagnostics			
Alarms			
• Diagnostic alarm	No	Yes; parameterizable	No
Diagnoses			
• Diagnostics	No	Yes; Off / last value / substitute value	No
Isolation			
Isolation checked with	2000 V AC	1500 V AC	1500 V AC
Isolation			
Isolation, digital outputs			
• between the channels, in groups of	1	1	8
• between the channels and the backplane bus	Yes; Optocoupler	Yes; Optocoupler	Yes; Optocoupler
Dimensions and weight			
Width	40 mm	40 mm	40 mm
Height	125 mm	125 mm	125 mm
Depth	120 mm	120 mm	120 mm
Weights			
Weight, approx.	320 g	320 g	250 g

© Siemens AG 2007

Ordering data

		Order No.
SM 322 digital output modules		
incl. labeling strips, bus connector		
8 outputs, 24 V DC, 2 A		**6ES7 322-1BF01-0AA0**
16 outputs, 24 V DC, 0.5 A		**6ES7 322-1BH01-0AA0**
16 outputs, 24 V DC, 0.5 A, high speed		**6ES7 322-1BH10-0AA0**
32 outputs, 24 V DC, 0.5 A		**6ES7 322-1BL00-0AA0**
8 outputs, 24 V DC, 0.5 A, diagnostics-capable		**6ES7 322-8BF00-0AB0**
16 outputs, 24/48 V DC, 0.5 A	A)	**6ES7 322-5GH00-0AB0**
8 outputs, 48 to 125 V DC, 1.5 A	A)	**6ES7 322-1CF00-0AA0**
8 outputs, 120/230 V AC, 1 A	A)	**6ES7 322-1FF01-0AA0**
8 outputs, 120/230 V AC, 2 A	A)	**6ES7 322-5FF00-0AB0**
16 outputs, 120/230 V AC, 1 A	A)	**6ES7 322-1FH00-0AA0**
32 outputs, 120 V AC, 1 A	A)	**6ES7 322-1FL00-0AA0**
8 outputs, relay contacts, 2 A		**6ES7 322-1HF01-0AA0**
8 outputs, relay contacts, 5 A		**6ES7 322-1HF10-0AA0**
8 outputs, relay contacts, 5 A, with RC filter, overvoltage protection	A)	**6ES7 322-5HF00-0AB0**
16 outputs, relay contacts, 8 A		**6ES7 322-1HH01-0AA0**
Front connectors		
20-pin, with screw contacts		
• 1 unit		**6ES7 392-1AJ00-0AA0**
• 100 units		**6ES7 392-1AJ00-1AB0**
20-pin, with cage clamp contacts		
• 1 unit		**6ES7 392-1BJ00-0AA0**
• 100 units		**6ES7 392-1BJ00-1AB0**
40-pin, with screw contacts		
• 1 unit		**6ES7 392-1AM00-0AA0**
• 100 units		**6ES7 392-1AM00-1AB0**
40-pin with cage clamp contacts		
• 1 unit		**6ES7 392-1BM01-0AA0**
• 100 units		**6ES7 392-1BM01-1AB0**
Front door, elevated design	A)	**6ES7 328-0AA00-7AA0**
e.g. for 32-channel modules; for connecting 1.3 mm²/16 AWG conductors		
SIMATIC TOP connect		See page 4/225; Information about which components can be used for the respective module, see A&D Mall or Catalog KT 10.2
Bus connectors		**6ES7 390-0AA00-0AA0**
1 unit (spare part)		
Set of fuses for SM 322		
10 fuses 8 A quick-response, 2 fuse holders; for 6ES7 322-1FF01-0AA0, 6ES7 322-1FH00-0AA0	A)	**6ES7 973-1HD00-0AA0**
10 fuses 6.3 A; for 6ES7 322-1CF00-0AA0		**6ES7 973-1GC00-0AA0**

		Order No.
Labeling strips		
10 units (spare part)		
for modules with 20-pin front connector		**6ES7 392-2XX00-0AA0**
for modules with 40-pin front connector		**6ES7 392-2XX10-0AA0**
Label cover		
10 units (spare part)		
for modules with 20-pin front connector		**6ES7 392-2XY00-0AA0**
for modules with 40-pin front connector		**6ES7 392-2XY10-0AA0**
S7 SmartLabel		
Software for automatic labeling of modules based on data of the STEP 7 project		**2XV9 450-1SL01-0YX0**
Labeling sheets for machine inscription		
For 16-channel signal modules, DIN A4, for printing with laser printer; 10 units		
petrol		**6ES7 392-2AX00-0AA0**
light-beige		**6ES7 392-2BX00-0AA0**
yellow		**6ES7 392-2CX00-0AA0**
red		**6ES7 392-2DX00-0AA0**
For 32-channel signal modules, DIN A4, for printing with laser printer; 10 units		
petrol		**6ES7 392-2AX10-0AA0**
light-beige		**6ES7 392-2BX10-0AA0**
yellow		**6ES7 392-2CX10-0AA0**
red		**6ES7 392-2DX10-0AA0**
SIMATIC Manual Collection	D)	**6ES7 998-8XC01-8YE0**
Electronic manuals on DVD, multilingual: S7-200, S7-300, C7, S7-400, SIMATIC DP (Distributed I/O), SIMATIC PC, SIMATIC PG (Programming device), STEP 7, Engineering Tools, Runtime Software, SIMATIC PCS 7, SIMATIC HMI (Human Machine Interface), SIMATIC NET (Industrial Communication), SIMATIC Machine Vision, SIMATIC Sensors		
SIMATIC Manual Collection update service for 1 year	D)	**6ES7 998-8XC01-8YE2**
Current S7 Manual Collection DVD and the three subsequent updates		
S7-300 manual		
Design, CPU data, module data, instruction list		
German		**6ES7 398-8FA10-8AA0**
English		**6ES7 398-8FA10-8BA0**
French		**6ES7 398-8FA10-8CA0**
Spanish		**6ES7 398-8FA10-8DA0**
Italian		**6ES7 398-8FA10-8EA0**

A) Subject to export regulations: AL: N and ECCN: EAR99H

D) Subject to export regulations: AL: N and ECCN: 5D992B1

© Siemens AG 2007

Overview

- Analog inputs
- For connection of voltage and current sensors, thermocouples, resistors and resistance thermometers

Technical specifications

	6ES7 331-7KF02-0AB0	6ES7 331-7HF01-0AB0	6ES7 331-1KF01-0AB0	6ES7 331-7KB02-0AB0
Voltages and currents				
Load voltage L+				
• Rated value (DC)	24 V	24 V		24 V
• reverse polarity protection	Yes	Yes		Yes
Current consumption				
from load voltage L+ (without load), max.	200 mA	50 mA		80 mA
from backplane bus DC 5 V, max.	50 mA	60 mA	90 mA	50 mA
Power loss, typ.	1 W	1.5 W	0.4 W	1.3 W
Connection point				
required front connectors	20-pin	20-pin	40-pin	20-pin
Isochronous mode				
Isochronouos mode	No	Yes	No	No
Analog inputs				
Number of analog inputs	8	8	8	2
Number of analog inputs for resistance measurement	4		8	1
Cable length, shielded, max.	200 m; 50 m at 80 mV and with thermocouples	200 m	200 m; max. 50 m at 50 mV	200 m; 50 m at 80 mV and with thermocouples
permissible input frequency for voltage input (destruction limit), max.	20 V; continuous; 75 V for max. 1s (mark to space ratio 1:20)	20 V; 20 V continuous, 75 V for max. 1s (mark to space ratio 1:20)	30 V; 12 V continuous, 30 V for max. 1 s	20 V; continuous; 75 V for max. 1s (mark to space ratio 1:20)
permissible input current for current input (destruction limit), max.	40 mA	40 mA	40 mA	40 mA
Input ranges (rated values), voltages				
• 0 to +10 V			Yes	
• 1 to 5 V	Yes	Yes	Yes	Yes
• 1 to 10 V		Yes	No	
• -1 V to +1 V	Yes	Yes	Yes	Yes
• -10 V to +10 V	Yes	Yes	Yes	Yes
• -2.5 V to +2.5 V	Yes		No	Yes
• -250 mV to +250 mV	Yes		No	Yes
• -5 V to +5 V	Yes	Yes	Yes	Yes

© Siemens AG 2007

4

Technical specifications (continued)

	6ES7 331-7KF02-0AB0	6ES7 331-7HF01-0AB0	6ES7 331-1KF01-0AB0	6ES7 331-7KB02-0AB0
Input ranges (rated values), voltages (continued)				
• -50 mV to +50 mV			Yes	
• -500 mV to +500 mV	Yes		Yes	Yes
• -80 mV to +80 mV	Yes			Yes
Input ranges (rated values), currents				
• 0 to 20 mA	Yes	Yes	Yes	Yes
• -10 to +10 mA	Yes			Yes
• -20 to +20 mA	Yes	Yes	Yes	Yes
• -3.2 to +3.2 mA	Yes			Yes
• 4 to 20 mA	Yes	Yes	Yes	Yes
Input ranges (rated values), thermoelements				
• Type E	Yes			Yes
• Type J	Yes			Yes
• Type K	Yes			Yes
• Type N	Yes			Yes
Input ranges (rated values), resistors				
• 0 to 150 Ohm	Yes			Yes
• 0 to 300 Ohm	Yes			Yes
• 0 to 600 Ohm	Yes		Yes	Yes
• 0 to 6000 Ohm			Yes	
Input ranges (rated values), resistance thermometers				
• Ni 100	Yes; Standard		Yes; Standard/AirCon	Yes
• LG-Ni 1000			Yes; Standard/AirCon	
• Pt 100	Yes; Standard		Yes; Standard/AirCon	Yes
Characteristic linearization				
• programmable	Yes		Yes	Yes
• for thermoelements	Type N, E, J, K, L			Type N, E, J, K, L
• for thermoresistor	Pt 100 (Standard, climatic range), Ni 100 (Standard, climatic range)		yes; Pt100 standard/air con.; Ni100 standard/air con.; Ni1000 standard/air con.; LG-Ni1000 standard/air con.	Pt 100 (Standard, climatic range), Ni 100 (Standard, climatic range)
Temperature compensation				
• programmable	Yes			Yes
• external temperature compensation with compensations socket	Yes			Yes
• internal temperature compensation	Yes			Yes
Analog value creation				
Measurement principle	integrating	Conversion of instantaneous values	integrating	integrating
Integrations and conversion time/resolution per channel				
• Resolution with overload area (bit including sign), max.	15 Bit; unipolar: 9 / 12 / 12 / 14 bit, bipolar: 9 + sign/ 12 + sign/12 + sign/ 14 + sign bit	14 Bit; unipolar: 14 bit; bipolar: 13+sign bit	13 Bit	15 Bit; unipolar: 9 / 12 / 12 / 14 bit, bipolar: 9 + sign/ 12 + sign/12 + sign/ 14 + sign bit

© Siemens AG 2007

Technical specifications (continued)

	6ES7 331-7KF02-0AB0	6ES7 331-7HF01-0AB0	6ES7 331-1KF01-0AB0	6ES7 331-7KB02-0AB0
Integrations and conversion time/resolution per channel (continued)				
• Integration time, parameterizable	Yes; 2.5 / 16.67 / 20 / 100 ms	Yes	Yes; 60 / 50 ms	Yes; 2.5 / 16.67 / 20 / 100 ms
• Basic conversion time, including integration time, ms	3/ 17/ 22/ 102 ms		66 / 55 ms	6/ 34/ 44/ 204 ms
• Basic conversion time, ms		52 µs per channel	66 / 55 ms	
• Interference voltage suppression for interference frequency f1 in Hz	400 / 60 / 50 / 10 Hz	400 / 60 / 50 / 10 Hz	50 / 60 Hz	400 / 60 / 50 / 10 Hz
Encoder				
Connection of signal encoders				
• for current measurement as 2-wire transducer	Yes	Yes	Yes; with external supply	Yes
• for current measurement as 4-wire transducer	Yes	Yes	Yes	Yes
• for resistance measurement with 2-conductor connection	Yes		Yes	Yes
• for resistance measurement with 3-conductor connection	Yes		Yes	Yes
• for resistance measurement with 4-conductor connection	Yes		Yes	Yes
Errors/accuracies				
Operational limit in overall temperature range				
• Voltage, relative to input area	+/- 1 %; +/-1% (80mV), +/-0.6% (250-1000mV), +/-0.8% (2.5-10mV)	+/- 0.4 %	+/- 0.6 %; +/-0.6% (+/-5V,10V,1-5V,0-10V; +/-0,5% (+/-50 mV, 500 mV, 1 V	+/- 1 %; +/-1% (80mV), +/- 0.6% (250-1000mV), +/- 0.8% (2.5-10V)
• Current, relative to input area	+/- 0.7 %; from 3.2 to 20mA	+/- 0.3 %	+/- 0.5 %; +/-20mA, 0-20mA, 4-20mA	+/- 0.7 %; from 3.2 to 20mA
• Impedance, relative to input area	+/- 0.7 %; 150, 300, 600 Ohm		+/- 0.5 %; 0-6kOhm, 0-600kOhm	+/- 0.7 %; 150, 300, 600 Ohm
• Resistance-type thermometer, relative to input area	+/- 0.7 %; +/-0.7% (Pt100/ Ni100); +/-0.8% (Pt100 climat)			+/- 0.7 %; +/-0.7% (Pt100/ Ni100); +/-0.8% (Pt100 climat)
Basic error limit (operational limit at 25 °C)				
• Voltage, relative to input area	+/- 0.6 %; +/-0.4% (250-1000mV); +/-0.6% (2.5-10mV); +/-0.7% (80mV)	+/- 0.25 %	+/- 0.4 %; 0.4% (+/-5V,10V,1-5V, 0-10V); 0.3% (+/-50mV,500mV,1V)	+/- 0.6 %; +/-0.6% (80mV, 2.5-10V); +/-0.4% (250-1000mV)
• Current, relative to input area	+/- 0.5 %; 3,2 to 20mA	+/- 0.2 %	+/- 0.3 %; +/-20mA, 0-20mA,4-20mA	+/- 0.5 %; 3,2 to 20mA
• Impedance, relative to input area	+/- 0.5 %; 150, 300, 600 Ohm		+/- 0.3 %; 0-6kOhm, 0-600kOhm	+/- 0.5 %; 150, 300, 600 Ohm
• Resistance-type thermometer, relative to input area	+/- 0.6 %; +/-0.5% (Pt100/ Ni100); +/-0.6% (Pt100 climatic)			+/- 0.6 %; +/-0.5% (Pt100/ Ni100); +/-0.6% (Pt100 climatic)
Status information/ alarms/diagnostics				
Alarms				
• Diagnostic alarm	Yes; parameterizable channels 0 and 2	Yes; parameterizable	No	Yes
• Limit value alarm	Yes; parameterizable	Yes; parameterizable channels 0 and 2	No	Yes; parameterizable; Channel 0
Diagnoses				
• Diagnostic information readable	Yes	Yes	No	Yes

© Siemens AG 2007

Technical specifications (continued)

	6ES7 331-7KF02-0AB0	6ES7 331-7HF01-0AB0	6ES7 331-1KF01-0AB0	6ES7 331-7KB02-0AB0
Isolation				
Isolation checked with	500 V DC	500 V DC	500 V DC	500 V DC
Isolation				
Isolation, analog inputs				
• between the channels	Yes	No	No	No
• between the channels, in groups of	2			
• between the channels and the backplane bus	Yes	Yes	Yes	Yes
Dimensions and weight				
Width	40 mm	40 mm	40 mm	40 mm
Height	125 mm	125 mm	125 mm	125 mm
Depth	120 mm	120 mm	117 mm	120 mm
Weights				
Weight, approx.	250 g	200 g	250 g	250 g

	6ES7 331-7PF01-0AB0	6ES7 331-7PF11-0AB0	6ES7 331-7NF00-0AB0	6ES7 331-7NF10-0AB0
Voltages and currents				
Load voltage L+				
• Rated value (DC)	24 V	24 V		24 V
• reverse polarity protection	Yes	Yes		Yes
Current consumption				
from load voltage L+ (without load), max.	240 mA	200 mA		200 mA
from backplane bus DC 5 V, max.	100 mA	100 mA	130 mA	100 mA
Power loss, typ.	4.6 W	3 W	0.6 W	3 W
Connection point				
required front connectors	40-pin	40-pin	40-pin	40-pin
Isochronous mode				
Isochronouos mode	No	No	No	No
Analog inputs				
Number of analog inputs	8	8	8	8
Number of analog inputs for resistance measurement	8			
Cable length, shielded, max.	200 m	100 m	200 m	200 m
permissible input frequency for voltage input (destruction limit), max.	75 V; 35 V continuous, 75 V for max. 1 s (mark to space ratio 1:20)	75 V; 20 V DC permanent, 75 V DC for max. 1 s (pulse duty factor 1:20)	50 V; permanent	75 V; 35 V continuous, 75 V for max. 1 s (mark to space ratio 1:20)
permissible input current for current input (destruction limit), max.			32 mA	40 mA
Input ranges (rated values), voltages				
• 1 to 5 V			Yes	Yes
• -10 V to +10 V			Yes	Yes
• -5 V to +5 V			Yes	Yes
Input ranges (rated values), currents				
• 0 to 20 mA			Yes	Yes
• -20 to +20 mA			Yes	Yes
• 4 to 20 mA			Yes	Yes

© Siemens AG 2007

ITEM 505

SM 331 analog input modules

4

Ordering data		Order No.
SM 331 analog input modules		
Including labeling strips, bus connector, measuring range modules		
8 inputs, 13-bit resolution		**6ES7 331-1KF01-0AB0**
8 inputs, resolution 9/12/14 bits		**6ES7 331-7KF02-0AB0**
2 inputs, resolution 9/12/14 bits	A)	**6ES7 331-7KB02-0AB0**
8 inputs, enhanced resolution 16 bits	A)	**6ES7 331-7NF00-0AB0**
8 inputs, enhanced resolution 16 bits, 4-channel mode	A)	**6ES7 331-7NF10-0AB0**
8 inputs, resolution 14 bits, for isochronous mode		**6ES7 331-7HF01-0AB0**
8 inputs, for thermal resistors	A)	**6ES7 331-7PF01-0AB0**
8 inputs, for thermoelements		**6ES7 331-7PF11-0AB0**
Measuring range module for analog inputs		**6ES7 974-0AA00-0AA0**
1 module for 2 analog inputs; 2 units (spare part)		
Front connectors		
1 unit		
20-pin, with screw contacts		
• 1 unit		**6ES7 392-1AJ00-0AA0**
• 100 units		**6ES7 392-1AJ00-1AB0**
20-pin, with cage clamp terminals		
• 1 unit		**6ES7 392-1BJ00-0AA0**
• 100 units		**6ES7 392-1BJ00-1AB0**
40-pin, with screw contacts		
• 1 unit		**6ES7 392-1AM00-0AA0**
• 100 units		**6ES7 392-1AM00-1AB0**
40-pin, with cage clamp terminals		
• 1 unit		**6ES7 392-1BM01-0AA0**
• 100 units		**6ES7 392-1BM01-1AB0**
Front door, elevated design	A)	**6ES7 328-0AA00-7AA0**
e.g. for 32-channel modules; for connecting 1.3 mm²/16 AWG wires		
SIMATIC TOP connect		See page 4/225; Information about which components can be used for the respective module, see A&D Mall or Catalog KT 10.2
Bus connectors		**6ES7 390-0AA00-0AA0**
1 unit (spare part)		
Shield connecting element		**6ES7 390-5AA00-0AA0**
80 mm wide, with 2 rows for 4 shielding connection clamps each		
Shielding connection clamps		
2 units		
For 2 cables with 2 mm to 6 mm diameter		**6ES7 390-5AB00-0AA0**
For 1 cable with 3 mm to 8 mm diameter		**6ES7 390-5BA00-0AA0**
For 1 cable with 4 mm to 13 mm diameter		**6ES7 390-5CA00-0AA0**

		Order No.
Label cover		**6ES7 392-2XY00-0AA0**
10 units (spare part), for modules with 20-pin front connector		
Labeling strips		**6ES7 392-2XX00-0AA0**
10 units (spare part), for modules with 20-pin front connector		
S7 SmartLabel		**2XV9 450-1SL01-0YX0**
Software for automatic labeling of modules based on data of the STEP 7 project		
Labeling sheets for machine labeling		
For 16-channel signal modules, DIN A4, for printing with laser printer; 10 units		
petrol		**6ES7 392-2AX00-0AA0**
light-beige		**6ES7 392-2BX00-0AA0**
yellow		**6ES7 392-2CX00-0AA0**
red		**6ES7 392-2DX00-0AA0**
For 32-channel signal modules, DIN A4, for printing with laser printer; 10 units		
petrol		**6ES7 392-2AX10-0AA0**
light-beige		**6ES7 392-2BX10-0AA0**
yellow		**6ES7 392-2CX10-0AA0**
red		**6ES7 392-2DX10-0AA0**
SIMATIC Manual Collection	D)	**6ES7 998-8XC01-8YE0**
Electronic manuals on DVD, multilingual: S7-200, S7-300, C7, S7-400, SIMATIC DP (Distributed I/O), SIMATIC PC, SIMATIC PG, STEP 7, Engineering Tools, Runtime Software, SIMATIC PCS 7, SIMATIC HMI (Human Machine Interface), SIMATIC NET (Industrial Communication), SIMATIC Machine Vision, SIMATIC Sensors		
SIMATIC Manual Collection update service for 1 year	D)	**6ES7 998-8XC01-8YE2**
Current S7 Manual Collection DVD and the three subsequent updates		
S7-300 manual		
Design, CPU data, module data, instruction list		
German		**6ES7 398-8FA10-8AA0**
English		**6ES7 398-8FA10-8BA0**
French		**6ES7 398-8FA10-8CA0**
Spanish		**6ES7 398-8FA10-8DA0**
Italian		**6ES7 398-8FA10-8EA0**

A) Subject to export regulations: AL: N and ECCN: EAR99H
D) Subject to export regulations: AL: N and ECCN: 5D992B1

© Siemens AG 2007

Front connectors

Overview

- For simple and user-friendly connection of sensors and actuators
- For retaining the wiring when replacing modules
- With coding to avoid mistakes when replacing modules

Ordering data

Ordering data		Order No.
Front connectors		
20-pin, with screw contacts		
• 1 unit		**6ES7 392-1AJ00-0AA0**
• 100 units		**6ES7 392-1AJ00-1AB0**
20-pin, with cage clamp terminals		
• 1 unit		**6ES7 392-1BJ00-0AA0**
• 100 units		**6ES7 392-1BJ00-1AB0**
40-pin, with screw contacts		
• 1 unit		**6ES7 392-1AM00-0AA0**
• 100 units		**6ES7 392-1AM00-1AB0**
40-pin, with cage clamp terminals		
• 1 unit		**6ES7 392-1BM01-0AA0**
• 100 units		**6ES7 392-1BM01-1AB0**
Front door, elevated design	A)	**6ES7 328-0AA00-7AA0**
e.g. for 32 channel modules; enables connection of 1.3 mm^2/16 AWG wires		

A) Subject to export regulations: AL: N and ECCN: EAR99H

© Siemens AG 2011

CP 343-1 Lean

Overview

ISO	TCP/ UDP	PN	MRP	IT	IP-R	PG/OP	S7/S5
	●	●	●			●	●

Communication processor for connecting the SIMATIC S7-300 powerline to Industrial Ethernet networks, also as a PROFINET IO device.

Support of PG/OP communication, S7 communication, open communication (SEND/RECEIVE) and PROFINET communication.

Technical specifications

Order No.	6GK7 343-1CX10-0XE0
	CP 343-1 Lean
Transmission rate	
Transmission rate at interface 1	10 … 100 Mbit/s
Interfaces	
Number of electrical connections	
• at interface 1 in accordance with Industrial Ethernet	2
• for power supply	1
Design of electrical connection	
• at interface 1 in accordance with Industrial Ethernet	RJ45 port
• for power supply	2-pin plug-in terminal strip
Supply voltage, current consumption, power loss	
Type of power supply	DC
Power supply	
• 1 from backplane bus	5 V
• External	24 V
Relative positive tolerance at 24 V DC	20 %
Relative negative tolerance at 24 V DC	15 %
Current consumed	
• from backplane bus at 5 V DC, typical	0.2 A
• from external power supply with 24 V DC	
- Typical	0.16 A
- Maximum	0.2 A
Effective power loss	5.8 W

Order No.	6GK7 343-1CX10-0XE0
	CP 343-1 Lean
Permitted ambient conditions	
Ambient temperature	
• With vertical installation during operating phase	0 ... 40 °C
• With horizontal installation during operating phase	0 ... 60 °C
• During storage	-40 ... +70 °C
• During transport	-40 ... +70 °C
Relative humidity at 25 °C without condensation during operating phase, maximum	95 %
IP degree of protection	IP 20
Design, dimensions and weights	
Module format	S7-300 compact module, single-width
Width	40 mm
Height	125 mm
Depth	120 mm
Net weight	0.22 kg
Performance data	
Performance data Open communication	
Number of possible connections for open communication by means of SEND/RECEIVE blocks, maximum	8

Technical specifications (continued)

Order No.	6GK7 343-1CX10-0XE0
	CP 343-1 Lean
Data volume	
• as user data per TCP connection for open communication by means of SEND/RECEIVE blocks, maximum	8 KB
• as user data per UDP connection for open IE communication by means of SEND/RECEIVE blocks, maximum	2 KB
Number of multicast stations	8
Performance data S7 communication	
Maximum number of possible connections for S7 communication	4
Number of possible connections for S7 communication - Note	-
Performance data Multiprotocol operation	
Number of active connections in multiprotocol mode	12
Performance data PROFINET communication as PN IO device	
Product function: PROFINET IO device	Yes
Data volume	
• As user data for input variables as PROFINET IO device, maximum	512 byte
• As user data for output variables as PROFINET IO device, maximum	512 byte
• As user data for input variables per submodule as PROFINET IO device	240 byte
• As user data for output variables per submodule as PROFINET IO device	240 byte
• As user data for the consistency area per submodule	240 byte
Number of submodules per PROFINET IO device	32

Order No.	6GK7 343-1CX10-0XE0
	CP 343-1 Lean
Product functions Management, configuration, programming	
Product function: MIB support	Yes
Protocol is supported	
• SNMP v1	Yes
• DCP	Yes
• LLDP	Yes
Configuration software required	STEP 7 V5.4 and higher
Product functions Diagnostics	
Product function: Web-based diagnostics	Yes
Product functions Switch	
Product feature: Switch	Yes
Product function	
• Switch-managed	No
• Configuration with STEP 7	Yes
Product functions Redundancy	
Product function	
• Ring redundancy	Yes
• Redundancy procedure MRP	Yes
Product functions Security	
Product function	
• Switching-off non-required services	Yes
• Blocking of communication via physical ports	Yes
Product functions Time	
Product function	
• SICLOCK support	Yes
• Passing-on of time synchronization	Yes
NTP Protocol is supported	Yes

5

Ordering data	Order No.
CP 343-1 Lean communication processor For connecting SIMATIC S7-300 to Industrial Ethernet through TCP/IP and UDP, Multicast, S7 communication, open communication (SEND/RECEIVE), FETCH/WRITE, PROFINET IO device, MRP, integrated 2-port switch ERTEC, comprehensive diagnostics facilities, module replacement without PG, SNMP, initial commissioning over LAN; with electronic manual on CD-ROM	**6GK7 343-1CX10-0XE0**
IE FC TP standard cable GP 2x2 4-core, shielded TP installation cable for connection to IE FC Outlet RJ45/ IE FC RJ45 Plug; PROFINET-compatible; with UL approval; sold by the meter	**6XV1 840-2AH10**
CSM 377 compact switch module Unmanaged switch for connection of a SIMATIC S7-300-CPU, ET 200M and as many as three further nodes to Industrial Ethernet operating at 10/100 Mbit/s; 4 x RJ-45 ports; external 24 V DC power supply, LED diagnostics, S7-300 module including electronic Manual on CD-ROM	**6GK7 377-1AA00-0AA0**
IE FC RJ-45 Plug 145 RJ-45 plug connector for Industrial Ethernet with a rugged metal housing and integrated insulation displacement contacts for connecting Industrial Ethernet FC installation cables; with 145° cable outlet;	
• 1 pack = 1 unit	**6GK1 901-1BB30-0AA0**
• 1 pack = 10 units	**6GK1 901-1BB30-0AB0**
• 1 pack = 50 units	**6GK1 901-1BB30-0AE0**
IE FC stripping tool Preadjusted stripping tool for fast stripping of the Industrial Ethernet FC cables	**6GK1 901-1GA00**
SOFTNET S7 for Industrial Ethernet	
Software for S7 and open communication, including OPC server, PG/OP communication and NCM PC, runtime software, software and electronic manual on CD-ROM, license key on a USB stick, Class A	
SOFTNET V8.0 for Industrial Ethernet for 32-bit Windows 7 Professional/ Ultimate; German/English up to 64 connections	
• Single license for 1 installation	**6GK1 704-1CW80-3AA0**

	Order No.
SOFTNET Edition 2008 for Industrial Ethernet for 32-bit Windows XP Professional SP2/3; Windows 2003 Server R2, SP2; Windows Vista Business/Ultimate SP1; Windows 2008 Server; German/English up to 64 connections	
• Single license for 1 installation	**6GK1 704-1CW71-3AA0**
• 1-year Software Update Service, with automatic extension; requirement: Current software version	**6GK1 704-1CW00-3AL0**
• Upgrade from Edition 2006 to V8.0	**6GK1 704-1CW00-3AE0**
• Upgrade from V6.0, V6.1, V6.2 or V6.3 to V8.0	**6GK1 704-1CW00-3AE1**
SOFTNET S7 Lean Edition V8 for Industrial Ethernet up to 8 connections	
• Single license for 1 installation	**6GK1 704-1LW80-3AA0**
SOFTNET S7 Lean Edition 2008 for Industrial Ethernet up to 8 connections	
• Single license for 1 installation	**6GK1 704-1LW71-3AA0**
• 1-year Software Update Service, with automatic extension; requirement: Current software version	**6GK1 704-1LW00-3AL0**
• Upgrade from Edition 2006 to V8.0	**6GK1 704-1LW00-3AE0**
• Upgrade from V6.0, V6.1, V6.2 or V6.3 to V8.0	**6GK1 704-1LW00-3AE1**
STEP 7 Version 5.4 Target system: SIMATIC S7-300/-400, SIMATIC C7, SIMATIC WinAC Requirements: Windows XP Professional, Vista Ultimate, Vista Business Type of dlivery: German, English, French, Spanish, Italian, including license key on USB flash drive, with electronic documentation	
• Floating license on DVD	**6ES7 810-4CC08-0YA5**
• Rental license for 50 hours	**6ES7 810-4CC08-0YA6**
• Software Update Service on DVD (requires current software version)	**6ES7 810-4BC01-0YX2**
• Floating license upgrade 3.x/4.x/5.x to V5.4; on DVD	**6ES7 810-4CC08-0YE5**
• Trial license STEP 7 V5.4; on DVD, operational for 14 days	**6ES7 810-4CC08-0YA7**

1) The HSP for the CP 343-1 Lean (6GK7-343-1CX10 0XE0) can be directly downloaded and installed from the Internet through STEP 7 and is already included from STEP 7 Version V5.4 SP1.

© Siemens AG 2007

Technical specifications (continued)

	6ES7 357-4AH01-0AE0
Positioning	
Programmable traverse speed, max.	1,000 m/min
Drive interface	
Signal output I	
• Type	5 V difference signal (phys. RS 422)
• Function	Direction, enable, clock pulse
• Differential output voltage, min.	2 V; RL = 100 Ohm
• Differential output voltage for signal "0", max.	1 V; Io = 20 mA
• Differential output voltage, for signal "1", min.	3.7 V; Io = -20 mA
• Pulse frequency	750 kHz
• Cable length, max.	50 m; 35 m in hybrid mode with servo axes
Signal output II	
• Type	Controller release (contact), FM-READY output (contact)
• Function	Drive disconnection for operation via contact relay, Data set ready for link with Emergency STOP
• Load	1 A/50 V/30 VA DC

	6ES7 357-4AH01-0AE0
Signal output III	
• Type	Analog output
• Function	Drive interface for analog drives: setpoint output for drive
• Output voltage	-10 to +10 V
• Output current	-3 to +3 mA
• Cable length, max.	35 m
Isolation	
Isolation, digital outputs	
• Galvanic isolation, digital outputs	Yes
Galvanic isolation, digital inputs	
• galvanic isolation, digital inputs	Yes
Dimensions and weight	
Width	200 mm
Height	125 mm
Depth	118 mm
Weights	
Weight, approx.	1,200 g

Ordering data

	Order No.
FM 357-2 positioning module B)	**6ES7 357-4AH01-0AE0**
Basic unit	
System firmware	
incl. configuration package on CD-ROM, German, English, French, Italian, consisting of equipment manual (electronic), configuring software (parameterization screenforms, standard blocks, operator control and monitoring screenforms for OP17/OP27)	
FM 357-2L system firmware	**6ES7 357-4AH03-3AE0**
On memory card	
FM 357-2LX system firmware	**6ES7 357-4BH03-3AE0**
With additional functions; on memory card	
FM 357-H system firmware	**6ES7 357-4CH03-3AE0**
With additional functions for the handling sector; on memory card	
FM 357-2 manual	
German	**6ES7 357-4AH00-8AG0**
English	**6ES7 357-4AH00-8BG0**
French	**6ES7 357-4AH00-8CG0**
Italian	**6ES7 357-4AH00-8EG0**

B) Subject to export regulations: AL: N and ECCN: 4A994

	Order No.
Edit FM	**6FC5 263-0AA03-0AB0**
Program editor for editing, loading and saving NC programs with the standard programming device/PC; German/English, on CD-ROM	
Connecting cables and encoders	see catalogs NC 60, CA 01 or in the A&D Mall
Front connector	
40-pin, with screw contacts	
• 1 unit	**6ES7 392-1AM00-0AA0**
• 100 units	**6ES7 392-1AM00-1AB0**
40-pin, with cage clamp terminals	
• 1 unit	**6ES7 392-1BM01-0AA0**
• 100 units	**6ES7 392-1BM01-1AB0**
Back-up battery	**6ES7 971-1AA00-0AA0**
Li-Ion, 3.6 V/0.95 Ah	
Signal cable	
Pre-assembled for SSI absolute encoder, UL/DESINA	**6FX5 0■2-2CC11-■■■■**
Pre-assembled for TTL encoder 6FX2001-1, UL/DESINA	**6FX5 0■2-2CD01-■■■■**
Pre-assembled for TTL encoder 24 V, UL/DESINA	**6FX5 0■2-2CD24-■■■■**
Length code	see FM 351, page 4/154

Littelfuse®
Expertise Applied | Answers Delivered

ITEMS 320, 323

Electrical Characteristic Specifications by Item

Amp Code	Amp Rating (A)	Voltage Rating (V)	Interrupting Rating	Nominal Cold Resistance (Ohms)	Nominal Melting I²t (A²sec)	Nominal Voltage Drop at Rated Current (mV)	Nominal Power Dissipation At Rated Current (W)	Agency Approvals								
.032	0.032	250	35A@250Vac	262.2000	0.00006	10000	1.6	x	x		x	x	x	x	x	
.040	0.04	250		183.1500	0.00008	8000	1.6	x	x		x	x	x	x	x	
.050	0.05	250		15.2000	0.00019	7000	1.6	x	x		x	x	x	x	x	
.063	0.063	250		10.4500	0.00056	5000	1.6	x	x		x	x	x	x	x	
.080	0.08	250		7.8900	0.00083	4000	1.6	x	x		x	x	x	x	x	
.100	0.1	250		5.6965	0.00450	3500	1.6	x	x		x	x	x	x	x	
.125	0.125	250		3.8200	0.00478	2000	1.6	x	x		x	x	x	x	x	
.160	0.16	250		2.5250	0.01000	2000	1.6	x	x		x	x	x	x	x	
.200	0.2	250		1.7000	0.02000	1700	1.6	x	x		x	x	x	x	x	
.250	0.25	250		1.2325	0.04000	1400	1.6	x	x		x	x	x	x	x	
.315	0.315	250		0.8800	0.11000	1300	1.6	x	x		x	x	x	x	x	
.400	0.4	250		0.2770	0.12500	1200	1.6	x	x		x	x	x	x	x	x
.500	0.5	250		0.2065	0.21500	1000	1.6	x	x		x	x	x	x	x	x
.630	0.63	250		0.1900	0.41000	650	1.6	x	x		x	x	x	x	x	x
.800	0.8	250		0.1203	0.85000	240	1.6	x	x		x	x	x	x	x	x
001.	1	250		0.0964	1.04500	200	1.6	x	x	x	x	x	x	x	x	x
1.25	1.25	250		0.0701	2.23000	200	1.6	x	x	x	x	x	x	x	x	x
01.6	1.6	250		0.0528	4.61500	190	1.6	x	x	x	x	x	x	x	x	x
002.	2	250		0.0416	5.73000	170	1.6	x	x	x	x	x	x	x	x	x
02.5	2.5	250		0.0334	9.46000	170	1.6	x	x	x	x	x	x	x	x	x
3.15	3.15	250		0.0224	17.72000	150	2.5	x	x	x	x	x	x	x	x	x
004.	4	250	40A@250Vac	0.0165	29.16500	130	2.5	x	x	x	x	x	x	x	x	x
005.	5	250	50A@250Vac	0.0137	42.79500	130	2.5	x	x	x	x	x	x	x	x	x
06.3	6.3	250	63A@250Vac	0.0095	62.46500	130	2.5	x	x	x	x	x	x	x	x	x
008.	8	250	80A@250Vac	0.0068	198.16000	130	4	x		x				x	x*	
010.	10	250	100A@250Vac	0.0063	217.63500	130	4	x		x				x	x*	
015.	15	250	150A@250Vac	0.0040	607.13500	130	4			x				x	x*	

* Approval for cartidge versions only.

Temperature Rerating Curve

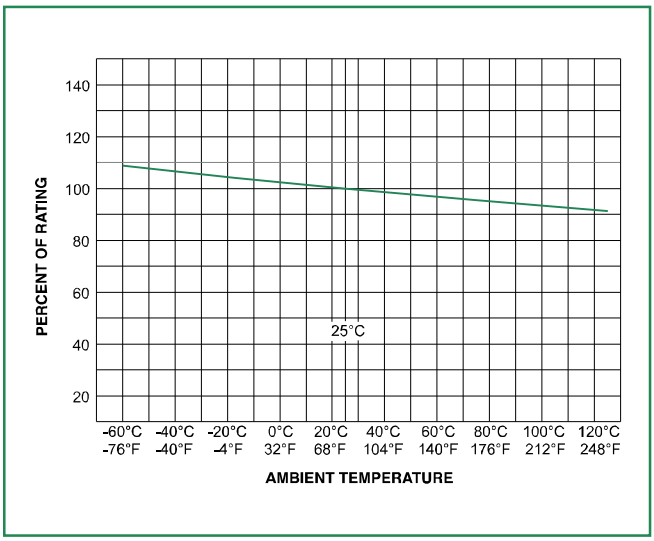

Average Time Current Curves

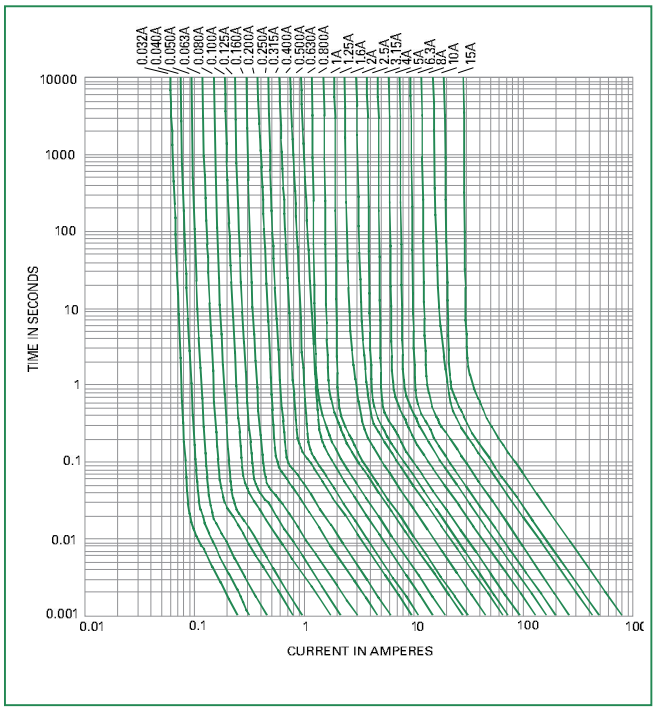

© 2009 Littelfuse, Inc.
Specifications are subject to change without notice.
Please refer to www.littelfuse.com/series/217.html for current information.

Specification Section 16010

Arc Flash Hazard Study

PowerStudies.com
22443 SE 240th St., Ste. 207 Maple Valley, WA 98038

ARC FLASH HAZARD STUDY

City of Wenatchee WWTP Improvements
Wenatchee, WA

Submitted By:
Tam Tran

Reviewed By:
Audra Justice

Customer P.O. #S456435
Job #1109105
Date: 10/25/12
Revision 0

253.639.8535 Phone
425.413.6797 Fax
www.powerstudies.com

1 Introduction

2 Executive Summary and Recommendations

3 One Line Drawings

4 Arc Flash Study

5 Arc Flash Evaluation Bus Reports

6 Arc Flash Labels

7 Input Data

8 Protective Device List

TAB 1

INTRODUCTION

In 2012, North Coast Electric hired PowerStudies.com, P.S. to perform arc flash hazard calculations for the City of Wenatchee WWTP Improvements and to provide arc flash warning labels for each piece of electrical equipment shown on the one line drawing that would require servicing while energized. The facility is located in Wenatchee, WA.

The protection engineer from PowerStudies.com performed an Arc Flash Study for the distribution system shown on the one line drawing (Tab 3). The study calculated the Arc Flash Boundary, Incident Energy Level, and the required Personnel Protection Equipment (PPE). The study includes a spreadsheet-type listing of each piece of electrical equipment that would require servicing while energized, upstream protective devices, arc flash boundaries, incident energy, and required PPE and is located in Tab 5. Located in Tab 6 are paper copies of the Arc Flash Labels. (Note: Only 1 set of adhesive labels is included for this project.) These labels should be attached to each piece of equipment.

TAB 2

EXECUTIVE SUMMARY AND RECOMMENDATIONS

PowerStudies.com performed arc flash calculations for the distribution system shown on the one line drawing. The arc flash calculations show that PPE clothing can be worn to increase personnel protection for the majority of the locations. The study was performed using the NFPA-70E (2012), IEEE – 1584 (2002), and NEC standards and codes. Using these standards along with the Power*Tools for Windows – Arc Flash Module, the engineer determined the incident energy level at various points throughout the distribution system.

The engineer performed the arc flash calculations for the equipment shown on the electrical one line drawing contained in the report. The engineer started at the utility main service and continued downstream, but stopped at the secondary side of any 208 Volt transformers rated less than 125 kVA. This is based upon the IEEE 1584 (2002) Standard page 6 that states, "Equipment below 240 V need not be considered unless it involves at least one 125 kVA or larger low impedance transformer in its immediate power supply". Page 25 of the Standard also states, "The arc-flash hazard need only be considered for large 208 V systems: systems fed by transformers smaller than 125 kVA should not be a concern." For these downstream areas, generic labels were created for the locations.

To aid the technicians in determining what PPE (personal protective equipment) must be worn, Arc flash warning labels are provided for these various locations. The examples of these warning labels are shown below.

NFPA 70E (2012) has been revised and the Hazard Risk Category (HRC) is no longer being used and recognized if detailed arc flash calculations are performed. The HRC and PPE matrix table 130.7(C)(16) is only applicable if the Task Tables 130(C)(15)(a) or (b) are used. Section 130.5(B)(1) requires that personnel use Table H.3(b) to select the appropriate PPE equipment based upon the calculated incident energy level.

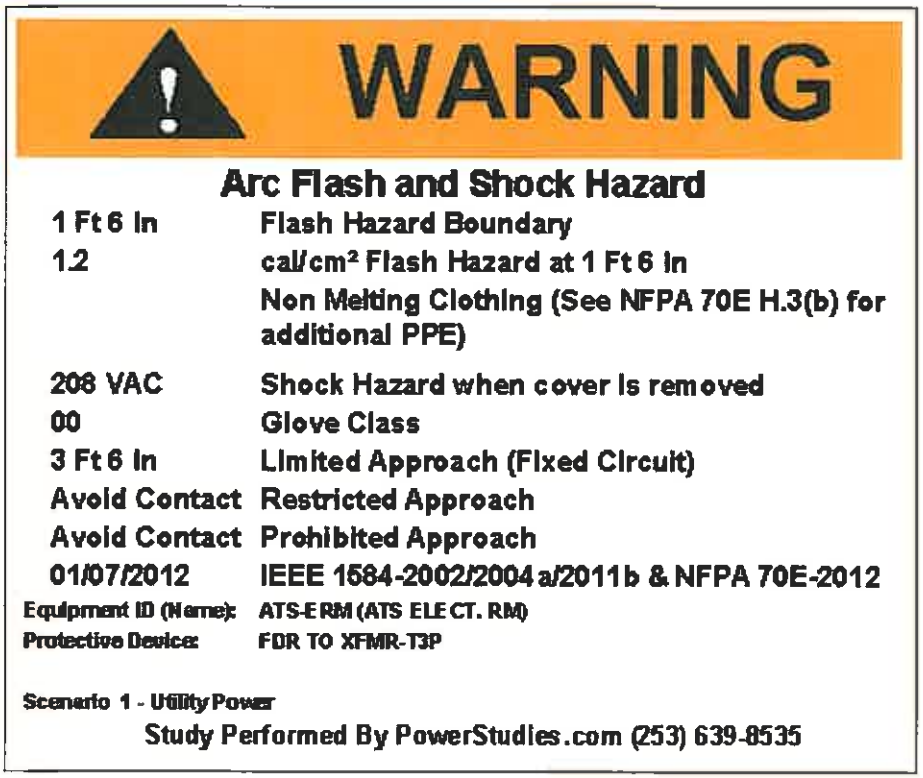

Figure 1 – Example Arc Flash Label

The PPE clothing class is determined based upon the incident energy and voltage class. The PPE matrix table H.3(b) from NFPA 70E (2012) can be found in Tab 4.

The engineer assumed the maximum arcing time current would be two seconds as referenced in IEEE-1584-2002. This is a reasonable assumption because after this period, the individual would either move voluntarily or be blown clear of the arcing fault.

The arc flash calculations show that PPE clothing can be worn to increase personnel protection for all of the locations. Arc flash warning labels provided for these locations display the maximum incident energy level. At areas greater than 1.2 cal/cm^2, arc rated clothing with an ATPV (arc thermal performance value) greater than the energy level shown on the label must be worn. The engineer recommends that the arc flash warning labels be installed on the electrical equipment to warn personnel of the potential hazard.

The following general recommendations will maintain the distribution system reliability.

1. Have a short circuit study performed to ensure that all the equipment is properly rated. Underrated equipment will make any arc flash calculations for the underrated equipment and the equipment downstream from it invalid and potentially dangerous.

2. Revise, update, and redraw the Distribution System One line drawing for the facility when new equipment is added. This will decrease trouble-shooting time, reduce errors in decision-making, and decrease engineering costs for future projects.

3. Test and inspect all electrical equipment periodically as outlined in:

   a) NFPA 70B: Electrical Equipment Maintenance
   b) NETA 2012: Standard for Acceptance Testing Specifications
   c) NETA 2007: Standard for Maintenance Testing Specification

4. NFPA 70E section 110.2 has specific electrical safety training requirements for qualified and non-qualified personnel. Retraining shall be performed at intervals not to exceed three years. (PowerStudies.com, P.S. provides low and high voltage electrical safety seminars as well as refresher courses. Please contact our company for more information.)

The following specific guidelines should be followed in order to safely perform maintenance.

1. Always de-energize equipment before removing covers or performing maintenance. If this is not possible, wear the appropriate PPE before working on the equipment.

2. In areas where the incident energy level is too high or the arc flash label indicates "DANGER!", or appropriate PPE is not available, the equipment must be de-energized before removing any covers and working on the equipment.

TAB 3

NOTES:

1. CONTENTS OF THIS DRAWING BASED ON "AS BUILT" DWG E-3, "DISTRIBUTION SYSTEM, ONE LINE DIAGRAMS", AUGUST 1992; AND RECORD DRAWING ELC-02, "EXISTING MCC-2, UV BUILDING AND AERATION BASIN, SINGLE LINE DIAGRAMS", FEBRUARY 2008.
2. CONTRACTOR TO VERIFY THERE IS AVAILABLE SPACE IN EXISTING EQUIPMENT AND MATCH BREAKER MANUFACTURER RATINGS AS APPROPRIATE.

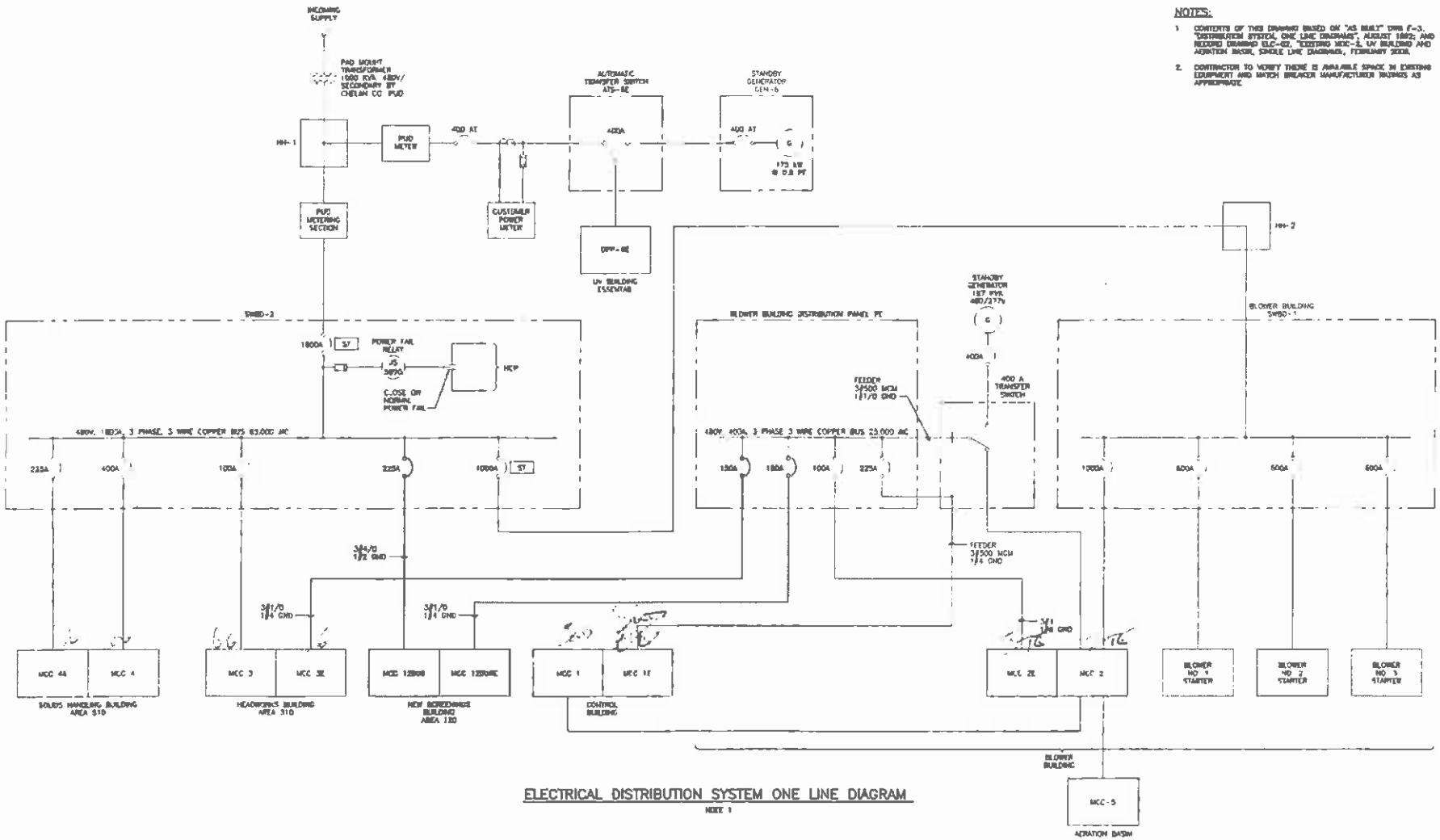

ELECTRICAL DISTRIBUTION SYSTEM ONE LINE DIAGRAM

NOTE 1

UNDERGROUND SERVICE ALERT
ONE-CALL NUMBER
1-800-424-5555

HDR

ISSUE	DATE	DESCRIPTION
A	JULY 2011	ISSUE FOR BID SUBMITTAL

PROJECT MANAGER	A. MELLEUR
DESIGNED	L. KINCEM
DRAWN	P. McCLINTOCK
CHECKED	F. SWANSON
PROJECT NUMBER	142105

06-08-11

City of Wenatchee
WASTE WATER TREATMENT PLANT IMPROVEMENTS

EXISTING ELECTRICAL DISTRIBUTION SYSTEM MODIFICATIONS

FILENAME: 000E-02.dwg
SCALE: NONE
SHEET: 000E-02

TAB 4

ARC FLASH STUDY

Arc Flash Calculations

The protection engineer performed arc flash calculations to determine the incident energy and arc flash boundary for various locations throughout the power system. Once the incident energy and arc flash boundaries are known, the required PPE is determined and the appropriate arc flash warning labels are generated. The owner can then attach these warning labels to electrical equipment that would require servicing while energized. These labels will indicate to personnel what the arc flash boundary is and what the correct personal protective equipment (PPE) is that they are required to wear.

NFPA 70E (2012) has been revised and the Hazard Risk Category (HRC) is no longer being used and recognized if detailed arc flash calculations are performed. The HRC and PPE matrix table 130.7(C)(16) is only applicable if the Task Tables 130(C)(15)(a) or (b) are used. Section 130.5(B)(1) requires that personnel use Table H.3(b) to select the appropriate PPE equipment based upon the calculated incident energy level.

Figure 2 – Example Arc Flash Label

The PPE clothing class is determined based upon the incident energy and voltage class. The PPE matrix table H.3(b) from NFPA 70E (2012) can be found in Tab 4.

CAUTION!

The equations used for the calculation of the estimated maximum incident energy and the estimated arc flash boundary distance are still under review and are being tested by IEEE and others.

Users should be aware that the equations are based upon measured incident energy under a specific set of test conditions and on theoretical work. Actual arc flash exposures may be more or less severe than calculated by the PTW program. (A discussion of the PTW program used for our calculations follows.) Calculations are base on the installation and configuration of the electrical distribution system as initially constructed. The calculations are also based upon the protective device settings listed in this report. Any changes or additions of the electrical distribution system or device settings may cause these calculations to be null & void. All short circuit and overcurrent protective devices (OCPD) must be replaced with the exact same manufacturer and model. Also, the user should be aware of the potentially hazardous effects of molten copper splatter, pressure impulses (arc blast), toxic arc byproducts, and projectiles. These effects have not been considered in the equation.

Personal Protective Equipment (PPE) for the arc flash hazard is the last line-of-defense. It is not intended nor will it prevent all injuries. NFPA 70E (2012) PPE levels are intended to reduce the impact of an arc flash to 2nd degree burns for the torso and head only. NFPA 70E (2012) states that the incident energy exposure shall be based on the working distance of the employee's face and head (18"). Objects closer to the arc flash will be exposed to much greater levels of incident energy. Arc Rated (AR) clothing and PPE shall be used based upon the incident energy exposure. This means injuries to hands and arms are expected if an arc at the level calculated and protected against occurs. It is impossible to design PPE to prevent all injures since it would be very restrictive and difficult to work in.

Incident energy levels are directly related to the clearing time of the upstream overcurrent protective device (OCPD). Operation of the OCPD within the manufacturers design specifications is essential for limiting the incident energy due to arc flash hazards. The Arc Flash Hazard Study is calculated based on the manufacturers published time current curves for new equipment. Failure of the OCPD components to operate within the manufacturer's time current curves will compromise the results of this Arc Flash Study and will result in higher levels of incident energy to electrical

workers. NETA, NFPA 70E (2012) & NFPA 70B standards recommend regularly scheduled maintenance and testing be performed on the electrical distribution system components to assure proper operation of all over current protective devices. Regular testing is required to protect electrical workers from greater arc flash energy hazards than are calculated in this study.

The arc flash labels provided in this study are invalid until the customer has field verified that the setting match what is shown under Tab 8.

Per the electrical contractor, Magnum Electric Service, the settings for the new breakers will be left unchanged from the factory settings.

The engineer performed the arc flash calculations for the equipment shown on the electrical one line drawing contained in the report. The engineer started at the utility main service and continued downstream to include the equipment shown of the one line drawings.

PTW Arc Flash Evaluation Program

The protection engineer used the PTW (Power Tools for Windows) Arc Flash Evaluation program. SKM System Analysis, Inc. of Redondo Beach, CA, wrote this program. It is an accepted industry standard for arc flash calculations and uses the IEEE 1584 equations. This program calculates the incident energy and arc flash boundary based upon the bolted three-phase short circuit at each bus.

These bolted three phase short circuit values are modified (reduced) by the program to determine the arcing fault current. The arcing fault current is then used to determine the upstream protective device clearing times. Incident energy and arc flash boundaries are calculated based on the bus three-phase fault current and arcing duration. Clothing requirements are specified from a user defined personal protective equipment table.

Maximum Arc Flash Energy (US) – All

Bus Name	Scenario	Protective Device Name	Bus Volt (v)	Bus Bolted Fault (kA)	Prot Dev Bolted Fault (kA)	Prot Dev Arcing Fault (kA)	Trip/ Delay Time (sec)	Breaker Opening Time (sec)	Ground	Equip Type	Gap (mm)	Arc Flash Bndry (in)	Work Dist (in)	Incident Energy (cal/cm2)	Notes
ATS-ERM (ATS ELECT. RM)	1	FDR TO XFMR-T3P	208	2.22	2.22	1.51	2.00	0.000	Y	PNL	25	18	18	1.20	(*N9) (*N15)
BUS1-FB (BUS 1 FEEDERBOX)	1	FDR TO XFMR-BUS1	208	1.85	1.85	1.33	2.00	0.000	Y	PNL	25	19	19	1.20	(*N9) (*N15)

The report contains one or more Arc Flash Calculation reports. The Maximum Arc Flash Energy (US) - All will display the maximum arc flash energy at each location. The second report Arc Flash Energy (US) - All Scenarios shows the arc flash energy results at each location for each different operating scenario. Reading from left to right, the columns have the following definitions:

Bus Name:	Indicates the fault location.
Scenario:	Operating scenario used to calculate the arc flash energy and arc flash boundary.
Protective Device Name:	The first upstream protective device that will interrupt (clear) for the fault.
kV:	Bus voltage at the fault location.
Bus Bolted Fault:	Total symmetrical fault current at the fault location.
Prot Dev Bolted Fault:	Symmetrical fault current passing through the referenced protective device for a bolted fault at the fault location, referenced to bus voltage at fault location.
Arcing Fault:	Branch fault current passing through the referenced protective device for an arcing fault at the fault location, referenced to bus voltage at fault location.
Trip/Delay Time:	Time for referenced protective device to trip (clearing curve) at arcing fault branch current value.
Breaker Opening Time:	User-defined trip time for breaker used when protective device clearing curve does not include the breaker operating time. For example, published relay trip curves reflect only the trip time of the relay since they can be applied to many different breakers

	and therefore the breaker opening time needs to be included.
Ground:	'Yes' indicates that the fault bus is connected solidly to ground. 'No' indicates that the fault bus is resistance grounded or ungrounded. The empirical equations for incident energy vary for grounded and ungrounded systems.
Equip Type:	Used only in the IEEE 1584 (2002) method to determine In Box or In Air condition as well as to provide a default gap between bus bars and distance factor used in the incident energy calculation.
Gap:	Gap between conductors where arc will occur.
Arc Flash Boundary:	Minimum distance from the arc within which a second degree burn could occur if no protective clothing is worn.
Working Distance:	Closest distance a worker's body, excluding arms and hands, would be exposed to the arc.
Incident Energy:	Energy released at the specified working distance expressed in cal/cm2 or J/cm2.
Calculation Notes	These notes provide additional information about how the arc flash energy was calculated. The cover sheet of these reports has a complete listing.

The following assumptions have been made by the PTW programmers and PowerStudies.com, P.S. Protection Engineer:

1. Arc Flash searches up to 5 branches away from the faulted bus to find the fastest protective device with an over-current trip curve. The device with the fastest trip time for the given arcing fault current is used. In most situations, this is the device closest to the faulted bus.

2. Worker is stationary during the entire arc flash incident (constant working distance) up to 2.0 seconds.

3. The maximum time that a worker will be exposed to the arc flash is 2.0 seconds. Either the person will move away or be blown away from the arcing fault location.

4. Induction motors are assumed to be operating. Fault current contribution from the motors lasts for 6 cycles only.

5. Current-limiting range for fuses is assumed to start where fuse clearing curve crosses 0.01 sec.

6. Current-limiting fuses operating in current limiting range are assumed to clear in ½ - ¼ cycle.

7. The Interrupting device is rated for available short circuit current.

8. The as found protective device settings were used by the protection engineer to perform the energy calculations. Selective Device Coordination has not been checked or verified by the protection engineer.

9. The engineer performed the arc flash calculations for the equipment shown on the electrical one line drawing contained in the report. The engineer started at the utility main service and continued downstream.

Theory

Arc Flash Energy and Arc Flash Boundaries are calculated using IEEE 1584 (2002a) Standard "IEEE Guide for Performing Arc Flash Hazard Calculations". NFPA 70E is used to determine other important information displayed on the arc flash label. The information displayed and the source is summarized below.

IEEE 1584 (2002a)

1) Arc Flash Energy (Incident Energy)
2) Arc Flash Boundary
3) Working Distance

NFPA 70E (2012)

1) Glove Class
2) Limited Approach Boundary
3) Restricted Approach Boundary
4) Prohibited Approach Boundary
5) Required PPE
6) Note: The Hazard Risk Category can no longer be shown on the label if the IEEE 1584 method is used.

Computer Modeling Software (SKM or ETAP)

1) Equipment Voltage
2) Equipment ID and Name
3) Operating Scenario

The following calculation procedures are used to determine the values shown on the Arc Flash Warning Labels and in the Arc Flash Evaluation Bus Reports:

Arc Flash Energy and Boundary Calculations Using IEEE 1584 (2002a)

The following is a summary of the steps and assumptions that are made to determine the arc flash energy and arc flash boundary using the IEEE 1584 equations and procedures.

1) Arc Flash Evaluation using IEEE 1584 (2002a) / D10 is applicable for the following ranges are used.

    a) Three phase systems operating at 60 or 50 Hertz

    b) Bus Voltage between 208V and 15kV

    c) Bolted fault current at the bus between 700A and 106kA

    d) Bus bar gap between 13mm and 153mm

    e) For systems greater than 15 kV, the LEE equations are used to calculate the arc flash energy and boundary.

    f) *For single phase systems, we model the system as a three phase system. Until new equations for single phase systems are developed, this is the best method available.

2) Determine the 3 Phase Fault at each bus in the power system, calculate or determine the Bolted Fault Current at the bus (IB) and the Bolted Fault Current through each

protective device (IB br).

3) Determine the Arcing Fault Current at the bus (Ia) and through each protective device (Ia br).

4) Determine the trip time for protective devices from the device Time Current Coordination Curves (TCC).

5) Determine the contact opening time for protective devices when using relays. Add this time to relay trip time.

Breaker Opening Time For relays:

Breaker Opening Time	Breaker Rating and Type
1.5 cycle	< 1000 V molded case
3.0 cycle	< 1000 V power circuit
5.0 cycle	1 – 35 kV
8.0 cycle	> 35 kV

For low voltage circuit breakers that can be tripped by relays, use a breaker opening time of 3 cycles. For all other device categories, set the Breaker Opening Time to 0.0s since the Trip/Delay Time reading from the TCC include breaker opening time already.

6) Determine the total Arcing duration by adding the Trip/Delay time and Breaker Opening time.

7) Determine the Equipment Type and Bus Bar Gap.

8) Determine the Working Distance.

The working distance based on the voltage level and equipment type using the table below.

Working Distance	**Equipment Type**	**kV**
24 inches (610mm)	Switchgear	≤ 1
18 inches (455mm)	Panel	≤1
36 inches (910mm)	Switchgear	> 1 & < 35
72 inches (1829mm)	Switchgear	> 35
18 inches (455mm)	all others	

9) Determine whether the equipment is grounded or not.

10) Calculate the Incident Energy using the equation in IEEE 1584

11) Calculate the Arc Flash Boundary DB using the equations in IEEE 1584

12) *Note: Following IEEE 1584 (2002) - 5.2, The program calculates a second arcing fault current at 85% of the original. Then the Trip Time and Incident Energy at both 85% and 100% arcing fault current is compared and the larger of the two Incident Energy values with the associated Trip Time are displayed.

Other Label Information Using NFPA 70E

The other information shown on our arc flash labels comes from NFPA 70E (2012). Below is a description of these items and from which tables they can be found in the document.

1) Determine the PPE Clothing Arc Rating and additional PPE

   The clothing Arc Rating and additional PPE is determined based upon the incident energy. This table (NPFA 70E Table H.3(b)) is shown on the next few pages.

Personnel Protective Equipment Matrix Table
(Data from 2012 Edition of NFPA 70E Tables H.3(b)

Incident Energy Exposure	**Protective Clothing and PPE**	**PPE Clothing Characteristics and Descriptions**
Less than or Equal to 1.2 cal/cm^2 Protective Clothing, Non-melting (according to ASTM F 1506-08) or Untreated Natural Fiber* Other Personal Protective Equipment	Shirt (long sleeve) and Pants (long) or coverall Arc-rated face shield for projectile protection (AN) Safety glasses or safety goggles (SR) Hearing protection (ear canal inserts) Heavy-Duty Leather gloves or rubber insulation gloves with leather protectors (AN)	Non-melting, flammable material (i.e., untreated cotton, wool, rayon, or silk, or blends of these materials) with a fabric weight at least 4.5 oz/yd^2 ***- PowerStudies.com recommends wearing arc rated clothing at all locations.***
Greater than 1.2 cal/cm^2 to 12 cal/cm^2 Arc Rated Clothing and equipment with an arc rating equal to or greater than the incidental energy determined in the (IEEE 1584) hazard analysis. (See Note 3) AR Protective Equipment	Arc-rated long-sleeve shirt (Note 3) Arc-rated pants (Note 3) Arc-rated coverall (Note 3) Arc-rated flash suit (SR) (Note 3) Arc-rated face shield and arc-rated balaclava hood or arc flash suit hood (SR) (Note 1) Arc-rated jacket, parka, or rainwear (AN) Hard hat Arc-rated hard hat liner (AN) Safety glasses or safety goggles (SR) Hearing protection (ear canal inserts) Heavy-Duty Leather gloves or rubber insulation gloves with leather protectors (SR) (See Note 4) Leather work shoes (AN)	Arc-rated shirt and pants or arc-rated coverall or arc-rated flash suit

Greater than 12 cal/cm^2 to 40 cal/cm^2 Arc Rated Clothing and equipment with an arc rating equal to or greater than the incidental energy determined in the (IEEE 1584) hazard analysis. (See Note 3) FR Protective Equipment	Arc-rated long-sleeve shirt Arc-rated pants Arc-rated coverall and/or Arc-rated flash suit (SR) Arc-rated flash suit hood (SR) Arc-rated gloves Arc-rated jacket, parka, or rainwear (AN) Hard hat Arc-rated hard hat liner (AN) Safety glasses or safety goggles (SR) Hearing protection (ear canal inserts) Arc rated gloves or rubber insulating gloves with leather protectors (SR) (See Note 4) Leather work shoes (AN)	Arc-rated shirt and pants or arc-rated coverall or arc-rated flash suit
Greater than 40 cal/cm^2	**Danger!** **PowerStudies.com does not recommend working or interacting with equipment in locations where the arc flash energy is greater than 40 cal/cm^2. At locations greater than 40 cal/cm^2, the arc blast becomes the dominant hazard and there is no PPE to protect personnel from the arc blast.**	

NFPA 70E Table H.3(b) Notes

Legend:
AN = As needed (in addition to the protective clothing and PPE required by 130.5(B)(1))
SR = Selection of one in group is required by 130.5(B)(1).

Notes:
1. Face shields with a wrap-around guarding to protect the face, chin, forehead, ears, and neck area are required by 130.8(C)(10)(c). For full head and neck protection, use a balaclava or an arc flash hood.
2. All items not designated "AN" are required per 130.7(C).

3. Arc ratings can be for a single layer, such as an arc-rated shirt and pants or a coverall, or for an arc flash suit or a multi-layer system consisting of a combination of arc-rated shirt and pants, coverall, and arc flash suit.
4. Rubber insulating gloves with leather protectors provide arc flash protection in addition to shock protection. Higher class rubber insulating gloves with leather protectors, due to their increased material thickness, provide increased arc flash protection.

2) The Glove Rating class is determined based upon the voltage class.

3) Determine the Limited Approach Boundary

   This is the distance from an exposed live part within which a shock hazard exists. This value is determined by NFPA 70E (2012) Table 130.4(C)(a).

4) Determine the Prohibited Approach Boundary

   This is the distance from an exposed live part within which work is considered the same as making contact with the live part. This value is determined by NFPA 70E (2012) Table 130.4(C)(a).

5) Determine the Restricted Approach Boundary

   This is the distance from an exposed live part within which there is an increased risk of shock, due to electrical arc over combined with inadvertent movement, for personnel working in close proximity to the live part. This value is determined by NFPA 70E (2012) Table 130.4(C)(a) shown below.

(1) Nominal System Voltage Range, Phase to Phase	(2) Limited Approach Boundary – Exposed Movable Conductor		(3) Limited Approach Boundary – Exposed Fixed Circuit Part		(4) Restricted Approach Boundary – Includes Inadvertent Movement Adder		(5) Prohibited Approach Boundary	
Less than 50	Not Specified		Not Specified		Not Specified		Not Specified	
50 to 300	10 ft 0 in.	3.0 m	3 ft 6in	1.0 m	Avoid Contact		Avoid Contact	
301 to 750	10 ft 0 in.	3.0 m	3 ft 6in.	1.0 m	1 ft 0 in.	0.3 m	0 ft 1 in.	25 mm
751 to 15 kV	10 ft 0 in.	3.0 m	5 ft 0 in.	1.5 m	2 ft 2 in.	0.7 m	0 ft 7 in.	0.2 m
15.1 kV to 36 kV	10 ft 0 in.	3.0 m	6 ft 0 in.	1.8 m	2 ft 7 in.	0.8 m	0 ft 10 in.	0.3 m
36.1 kV to 46 kV	10 ft 0 in.	3.0 m	8 ft 0 in.	2.5 m	2 ft 9 in.	0.8 m	1 ft 5 in.	0.4 m
46.1 kV to 72.5 kV	10 ft 0 in.	3.0 m	8 ft 0 in	2.5 m	3 ft 3 in.	1 m	2 ft 2 in.	1.0 m

(1) Nominal System Voltage Range, Phase to Phase	(2) Limited Approach Boundary – Exposed Movable Conductor		(3) Limited Approach Boundary – Exposed Fixed Circuit Part		(4) Restricted Approach Boundary – Includes Inadvertent Movement Adder		(5) Prohibited Approach Boundary	
72.6 kV to 121 kV	10 ft 8 in.	3.3 m	8 ft 0 in.	2.5 m	3 ft 4 in.	1.0 m	2 ft 9 in.	0.8 m
138 kV to 145 kV	11 ft 0 in.	3.4 m	10 ft 0 in.	3.0 m	3 ft 10 in.	1.2 m	3 ft 4 in.	1.0 m
161 kV to 169 kV	11 ft 8 in.	3.6 m	11 ft 8 in.	3.6 m	4 ft 3 in.	1.3 m	3 ft 9 in.	1.1 m
230 kV to 242 kV	13 ft 0 in.	4.0 m	13 ft 0 in.	4.0 m	5 ft 8 in.	1.7 m	5 ft 2 in.	1.6 m
345 kV to 362 kV	15 ft 4 in.	4.7 m	15 ft 4 in.	4.7 m	9 ft 2 in.	2.8 m	8 ft 8 in.	2.6 m
500 kV to 550 kV	19 ft 0 in.	5.8 m	19 ft 0 in.	5.8 m	11 ft 10 in.	3.6 m	11 ft 4 in.	3.5 m
765 kV to 800 kV	23 ft 9 in.	7.2 m	23 ft 9 in.	7.2 m	15 ft 11 in.	4.9 m	15 ft 5 in.	4.7 m

General Statement: Columns 1 through 5 of Table 130.2(C) all show various distances from the exposed energized electrical conductors or circuit part. They include dimensions that are added to a basic minimum air insulation distance. That basic minimum air insulation distance for voltages 72.5 kV and under are based on ANSI/IEEE 4-1995, Standard Techniques for High-Voltage Testing, Appendix 2B; and for voltages over 72.5 kV, are based on ANSI/IEEE 516-1995, "Guide for Maintenance Methods on Energized Power Lines". The minimum air insulation distances required to avoid flashover are:

6) Create the Arc Flash Hazard Warning Label

The Arc Flash Label lists important information such as Flash Hazard Boundary, Incident Energy at the given Working Distance, minimum PPE clothing arc rating, and the shock boundaries for Limited, Restricted, and Prohibited Approaches. An example of an arc flash warning label is shown below.

Figure 3 – Example Arc Flash Label

Results

The arc flash calculations show that PPE clothing can be worn to increase personnel protection for all of the locations. Arc flash warning labels provided for these locations display the maximum incident energy level. At areas greater than 1.2 cal/cm^2, arc rated clothing with an ATPV (arc thermal performance value) greater than the energy level shown on the label must be worn. The engineer recommends that the arc flash warning labels be installed on the electrical equipment to warn personnel of the potential hazard.

Ways to Reduce Arc Flash Energy

There are many ways to reduce arc flash energies within a facility. The best method is to de-energize the equipment before work is performed. This reduces the energy level to zero and then the arc flash hazard no longer exists.

In many locations, the obvious solution above cannot be implemented. Many times, breakers must be racked in and out while the equipment is energized. Sometimes, it can be extremely hazardous or expensive to de-energize or shut down the equipment. For these locations and facilities, several methods are available to reduce the arc flash energy levels.

The three major factors that affect the amount of arc flash energy at a particular location are:

1. Device Operation Time – The time it takes for the upstream device to operate.
2. Fault Current – The amount of fault current that will flow through the upstream protective device and is available at the fault location.
3. Working Distance – The amount of distance between the fault point and the worker.

It is the device operation time that effects the calculations the most, followed by fault current and working distance. In most cases, concentrating more on time reduction will result in a greater reduction in arc flash energy.

Many facilities use thermal magnetic trip units in their low voltage circuit breakers. These breakers have a fixed thermal and adjustable or fixed instantaneous function. Specifying breakers with solid state trip units using long, short, instantaneous, and ground fault functions will increase both equipment protection and coordination between devices. Tighter coordination between devices will mean a reduction in device operating times and arc flash energies.

For double ended substations using a bus tie, the mains and bus tie breaker settings can be set to the same settings. This enables the main to be set with a lower time delay which will reduce energy levels. Sacrificing the selective coordination between these devices is minor since most facilities rarely close the bus tie breakers except for maintenance purposes.

Most modern low voltage switchboards or switchgear can be equipped with trip units that are zone interlocked. If a fault occurs on the main bus, then the main and tie breakers will trip instantaneously instead of using the normal delayed coordination settings.

New trip units are being manufactured with maintenance switches. When this trip unit is switched to maintenance mode, a low instantaneous function is enabled. Should a fault occur, the breaker will quickly trip and reduce the arc flash hazard downstream. These trip units are available on new breakers or retrofit kits for old style power circuit breakers.

Medium voltage relay operating times can be reduced using some of the same techniques used above for low voltage switchgear. The operating (trip) times can sometimes be reduced by changing the relay operating curve. These times can also be changed by reducing the selective coordination safety margin and by selecting a lower time dial setting.

Many newer protective relays have group settings. This allows the relay settings to change depending upon an input to the relay. A maintenance switch can be added and connected to the input of one of the relays. When the switch is turned to the on position, it tells the relay to use a lower set of relay settings. Should a fault occur downstream from the relay, the relay will trip sooner and reduce the arc flash energy.

Arc flash energy can also be reduced by modification of the work procedures. Examples of this are listed below:

1. Eliminating paralleling of transformers. (reduces fault current and arc flash energy)
2. Eliminating work between Transformer Secondary and Main Breaker. (Normally, the primary device must sense the fault on the secondary side of the transformer. This lower level of fault current, seen by the primary devices causes the trip time to be long. This increased trip time means larger energy levels.
3. Implementing faster trip times for maintenance work. (See descriptions in previous section)
    a) Circuit Breakers
    b) Relays
    c) Using infrared windows for infrared surveys
    d) Working at a greater distance
    e) Do not stand in front of electrical equipment when operating or inserting (racking in)
    f) Remote breaker racking

Arc Flash hazards exist in every facility. This hazard can be reduced by reviewing types of equipment used, device operation times, and working distance. Each location must be analyzed and the best engineering solution determined. In summary, Arc Flash Energy can be reduced by increasing the worker distance, reducing fault currents, and decreasing the trip times.

TAB 5

Maximum Arc Flash Energy (US) – All

Scenario Descriptions

Scenario 1: Maximum Fault
Scenario 2: Minimum Fault
Scenario 3: Generator

Calculation Details

IEEE 1584-2002/2004a/2011b & NFPA 70E-2012 Versions Bus + Line Side Report (Include Line Side + Load Side Contributions), 80% Cleared Fault Threshold, include Ind. Motors for 5.0 Cycles, mis-coordination checked

Arc Flash Notes

(*N1) Out of IEEE 1584 or NFPA 70E Ranges. LEE equation is used in this case and applicable for Open Air only.
(*N2) < 80% Cleared Fault Threshold
(*N3) Arcing Fault Current Low Tolerances Used.
(*N4) Equipment Specific Incident Energy and Flash Boundary Equations Used.
(*N5) Mis-coordinated. Upstream Device Tripped.
(*N6) Special Instantaneous Protection in Use. Refer to Bus Detail & Device Setting Sheets.
(*N7) Trip Time Unlinked with TCC.
(*N8) Fault Current Unlinked with Fault Study results.
(*N9) Max Arcing Duration Reached
(*N10) Fuse Cable Protector Modeled.
(*N11) Out of IEEE 1584 Range, Lee Equation Used. Applicable for Open Air only. Existing Equipment type is not Open Air!
(*N12) Out of IEEE 1584 Gap Range.
(*N13) PPE up one Category
(*N14) Zone Selective Interlock (ZSI) in Use.
(*N15) Report as category 0 if fed by one transformer size < 125 kVA
(*N16) Trip Time Recalculated
(*N20) Out of NESC Voltage Range
(*N21) Out of NESC Fault Current Range
(*N22) Out of NESC Max Clearing Range
(*N23) Out of NESC Voltage Range
(*N24) Out of NESC Altitude Range
(*N25) Out of NESC Max Over Voltage Factor Range
(*N26) NESC SLG Fault is Zero

Maximum Arc Flash Energy (US) – All

Bus Name	Scenario	Protective Device Name	Bus Volt (v)	Bus Bolted Fault (kA)	Prot Dev Bolted Fault (kA)	Prot Dev Arcing Fault (kA)	Trip/ Delay Time (sec)	Breaker Opening Time (sec)	Ground	Equip Type	Gap (mm)	Arc Flash Bndry (in)	Work Dist (in)	Incident Energy (cal/cm2)	Notes
MCC-12006 (MCC 12006)	1	MCC 12006 MAIN	480	10.39	10.32	6.73	0.03	0.000	Y	PNL	25	11	18	0.54	
MCC-12006 (MCC 12006) (MCC 12006 MAIN LineSide)	1	FDR TO MCC 12006	480	10.39	10.32	6.73	0.03	0.000	Y	PNL	25	11	18	0.54	
MCC-12006E (MCC 12006E)	1	MCC 12006E MAIN	480	5.33	5.25	3.77	0.03	0.000	Y	PNL	25	8	18	0.29	
MCC-12006E (MCC 12006E) (MCC 12006E MAIN LineSide)	1	FDR TO MCC 12006E	480	5.33	5.25	3.77	0.03	0.000	Y	PNL	25	8	18	0.29	
MCC-3E (MCC 3E)	1	FDR TO MCC 3E	480	5.13	4.86	3.51	0.03	0.000	Y	PNL	25	7	18	0.28	

Arc Flash Energy All Scenarios (US) - All

Scenario Descriptions

Scenario 1: Maximum Fault
Scenario 2: Minimum Fault
Scenario 3: Generator

Calculation Details

IEEE 1584-2002/2004a/2011b & NFPA 70E-2012 Versions Bus + Line Side Report (Include Line Side + Load Side Contributions), 80% Cleared Fault Threshold, include Ind. Motors for 5.0 Cycles, mis-coordination checked

Arc Flash Notes

(*N1) Out of IEEE 1584 or NFPA 70E Ranges. LEE equation is used in this case and applicable for Open Air only.
(*N2) < 80% Cleared Fault Threshold
(*N3) Arcing Fault Current Low Tolerances Used.
(*N4) Equipment Specific Incident Energy and Flash Boundary Equations Used.
(*N5) Mis-coordinated, Upstream Device Tripped.
(*N6) Special Instantaneous Protection in Use. Refer to Bus Detail & Device Setting Sheets.
(*N7) Trip Time Unlinked with TCC.
(*N8) Fault Current Unlinked with Fault Study results.
(*N9) Max Arcing Duration Reached
(*N10) Fuse Cable Protector Modeled.
(*N11) Out of IEEE 1584 Range. Lee Equation Used. Applicable for Open Air only. Existing Equipment type is not Open Air!
(*N12) Out of IEEE 1584 Gap Range.
(*N13) PPE up one Category
(*N14) Zone Selective Interlock (ZSI) in Use.
(*N15) Report as category 0 if fed by one transformer size < 125 kVA
(*N16) Trip Time Recalculated
(*N20) Out of NESC Voltage Range
(*N21) Out of NESC Fault Current Range
(*N22) Out of NESC Max Clearing Range
(*N23) Out of NESC Voltage Range
(*N24) Out of NESC Altitude Range
(*N25) Out of NESC Max Over Voltage Factor Range
(*N26) NESC SLG Fault is Zero

Arc Flash Energy All Scenarios (US) - All

Bus Name	Scenario	Protective Device Name	Bus Volt (v)	Bus Bolted Fault (kA)	Prot Dev Bolted Fault (kA)	Prot Dev Arcing Fault (kA)	Trip/ Delay Time (sec)	Breaker Opening Time (sec)	Ground	Equip Type	Gap (mm)	Arc Flash Bndry (in)	Work Dist (in)	Incident Energy (cal/cm2)	Notes
MCC-12006 (MCC 12006)	1	MCC 12006 MAIN	480	10.39	10.32	6.73	0.03	0.000	Y	PNL	25	11	18	0.54	
MCC-12006 (MCC 12006)	2	MCC 12006 MAIN	480	9.92	9.92	6.51	0.03	0.000	Y	PNL	25	11	18	0.52	
MCC-12006 (MCC 12006) (MCC 12006 MAIN LineSide)	1	FDR TO MCC 12006	480	10.39	10.32	6.73	0.03	0.000	Y	PNL	25	11	18	0.54	
MCC-12006 (MCC 12006) (MCC 12006 MAIN LineSide)	2	FDR TO MCC 12006	480	9.92	9.92	6.51	0.03	0.000	Y	PNL	25	11	18	0.52	
MCC-12006E (MCC 12006E)	1	MCC 12006E MAIN	480	5.33	5.25	3.77	0.03	0.000	Y	PNL	25	8	18	0.29	
MCC-12006E (MCC 12006E)	2	MCC 12006E MAIN	480	5.09	5.09	3.68	0.03	0.000	Y	PNL	25	7	18	0.28	
MCC-12006E (MCC 12006E)	3	MCC 12006E MAIN	480	1.65	1.65	1.41	0.03	0.000	Y	PNL	25	4	18	0.10	
MCC-12006E (MCC 12006E) (MCC 12006E MAIN LineSide)	1	FDR TO MCC 12006E	480	5.33	5.25	3.77	0.03	0.000	Y	PNL	25	8	18	0.29	
MCC-12006E (MCC 12006E) (MCC 12006E MAIN LineSide)	2	FDR TO MCC 12006E	480	5.09	5.09	3.68	0.03	0.000	Y	PNL	25	7	18	0.28	
MCC-12006E (MCC 12006E) (MCC 12006E MAIN LineSide)	3	FDR TO MCC 12006E	480	1.65	1.65	1.41	0.03	0.000	Y	PNL	25	4	18	0.10	
MCC-3E (MCC 3E)	1	FDR TO MCC 3E	480	5.13	4.86	3.51	0.03	0.000	Y	PNL	25	7	18	0.28	
MCC-3E (MCC 3E)	2	FDR TO MCC 3E	480	4.76	4.76	3.48	0.03	0.000	Y	PNL	25	7	18	0.27	
MCC-3E (MCC 3E)	3	FDR TO MCC 3E	480	1.62	1.62	1.39	0.03	0.000	Y	PNL	25	4	18	0.10	

TAB 6

Arc Flash Label Installation Instructions

1) Before applying the labels to the equipment, read the important information listed below.

2) Always clean the surface with detergent to remove all grease and dirt. Wipe surface dry before applying the label.

3) Where possible, apply labels at eye level on equipment covers.

4) The labels are **CUSTOM MADE** and are specific to each piece of electrical equipment. Each label has an alpha-numeric ID and Name. The name is shown in parenthesis. Care must be taken when attaching the labels to the equipment.

   a) **VERIFY THAT YOU ARE ATTACHING THE CORRECT LABEL TO THE EQUIPMENT!!!**
   b) **If you are unsure, please contact our office immediately at 253-639-8535.**

5) Some locations will have a Line Side Label and a bus label. They should be installed at locations where maintenance staff could be exposed to energized parts on the line side of a fuse or circuit breaker. Examples of this are Main Breakers in Panelboards, Switchboards, Motor Control Centers and Switchgear. Bus labels are for the main bus of the equipment and are located downstream from the main breaker (if the main breaker exists). Both the bus ID and name will be the same. The difference is that a line side label will state, Line Side 6-DBA MAIN.

a) Attach the line side label at the main breaker line side. Usually this is located on the top of the main breaker but please verify before attaching the label.

b) Attach the bus label downstream from the main breaker.

Figure 4 – Example of Bus Side Label

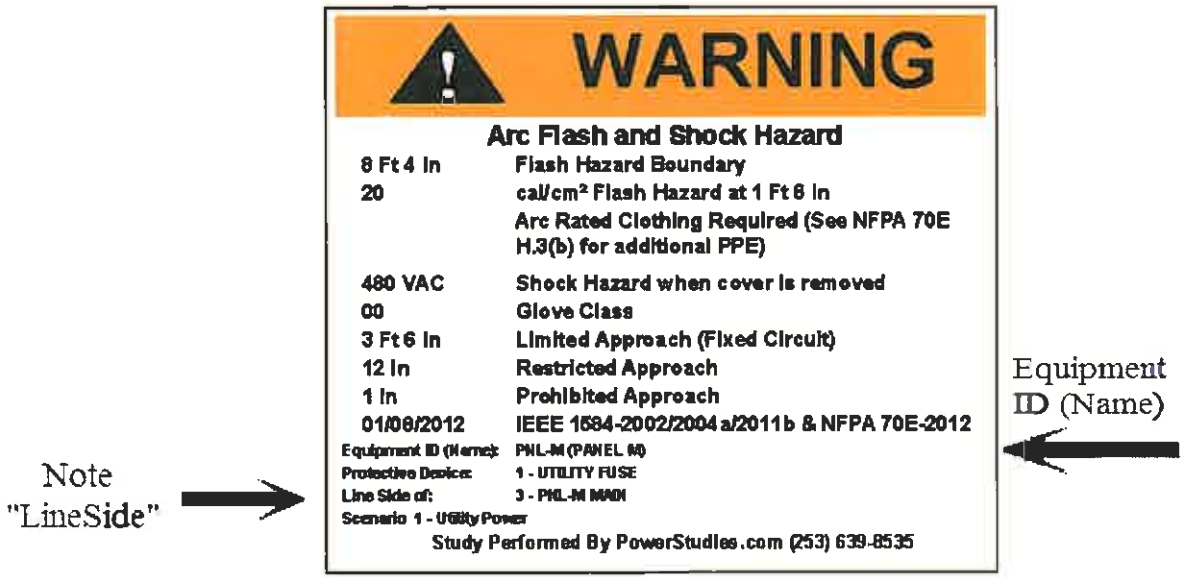

Figure 5 – Example of Line Side of a Protective Device

6) Transformers will have two labels provided. One label will be for the primary and the other label for the secondary. Place the labels on the appropriate ends (or sides) of the transformer. If the transformer is a small distribution type (i.e. 480 / 208 V) place both the primary and secondary labels on the front of the transformer.

7) Locations where the label will be exposed to direct sun light should be brought to the attention of PowerStudies.com. We will provide a special UV resistant label.

WARNING

Arc Flash and Shock Hazard

0 Ft 11 In	Flash Hazard Boundary
0.54	cal/cm² Flash Hazard at 1 Ft 6 In
	Non Melting AR Clothing Recommended (See NFPA 70E H.3(b) for additional PPE)
480 VAC	Shock Hazard when cover is removed
00	Glove Class
3 Ft 6 In	Limited Approach (Fixed Circuit)
12 In	Restricted Approach
1 In	Prohibited Approach
10/25/2012	IEEE 1584-2002/2004a/2011b & NFPA 70E-2012

Equipment ID (Name): MCC-12006 (MCC 12006)
Protective Device: MCC 12006 MAIN

Scenario 1 - Maximum Fault

Study Performed By PowerStudies.com (253) 639-8535

WARNING

Arc Flash and Shock Hazard

0 Ft 11 In	Flash Hazard Boundary
0.54	cal/cm² Flash Hazard at 1 Ft 6 In
	Non Melting AR Clothing Recommended (See NFPA 70E H.3(b) for additional PPE)
480 VAC	Shock Hazard when cover is removed
00	Glove Class
3 Ft 6 In	Limited Approach (Fixed Circuit)
12 In	Restricted Approach
1 In	Prohibited Approach
10/25/2012	IEEE 1584-2002/2004a/2011b & NFPA 70E-2012

Equipment ID (Name): MCC-12006 (MCC 12006)
Protective Device: FDR TO MCC 12006
Line Side of: MCC 12006 MAIN
Scenario 1 - Maximum Fault

Study Performed By PowerStudies.com (253) 639-8535

WARNING

Arc Flash and Shock Hazard

0 Ft 8 In	Flash Hazard Boundary
0.29	cal/cm² Flash Hazard at 1 Ft 6 In
	Non Melting AR Clothing Recommended (See NFPA 70E H.3(b) for additional PPE)
480 VAC	Shock Hazard when cover is removed
00	Glove Class
3 Ft 6 In	Limited Approach (Fixed Circuit)
12 In	Restricted Approach
1 In	Prohibited Approach
10/25/2012	IEEE 1584-2002/2004a/2011b & NFPA 70E-2012

Equipment ID (Name): MCC-12006E (MCC 12006E)
Protective Device: MCC 12006E MAIN

Scenario 1 - Maximum Fault

Study Performed By PowerStudies.com (253) 639-8535

WARNING

Arc Flash and Shock Hazard

0 Ft 8 In	Flash Hazard Boundary
0.29	cal/cm² Flash Hazard at 1 Ft 6 In
	Non Melting AR Clothing Recommended (See NFPA 70E H.3(b) for additional PPE)
480 VAC	Shock Hazard when cover is removed
00	Glove Class
3 Ft 6 In	Limited Approach (Fixed Circuit)
12 In	Restricted Approach
1 In	Prohibited Approach
10/25/2012	IEEE 1584-2002/2004a/2011b & NFPA 70E-2012

Equipment ID (Name): MCC-12006E (MCC 12006E)
Protective Device: FDR TO MCC 12006E
Line Side of: MCC 12006E MAIN
Scenario 1 - Maximum Fault

Study Performed By PowerStudies.com (253) 639-8535

WARNING

Arc Flash and Shock Hazard

0 Ft 7 In	Flash Hazard Boundary
0.28	cal/cm² Flash Hazard at 1 Ft 6 In
	Non Melting AR Clothing Recommended (See NFPA 70E H.3(b) for additional PPE)
480 VAC	Shock Hazard when cover is removed
00	Glove Class
3 Ft 6 In	Limited Approach (Fixed Circuit)
12 In	Restricted Approach
1 In	Prohibited Approach
10/25/2012	IEEE 1584-2002/2004a/2011b & NFPA 70E-2012
Equipment ID (Name):	MCC-3E (MCC 3E)
Protective Device:	FDR TO MCC 3E

Scenario 1 - Maximum Fault

Study Performed By PowerStudies.com (253) 639-8535

TAB 7

Project: 1109105

DAPPER Fault Analysis Input Report (English)

Utilities

Contribution From Name	Bus Name	In/Out Service	Nominal Voltage	Contribution Data				PU (100 MVA Base		
					Duty	Units	X/R		R PU	X PU
UTIL-MAX	XFMR-UTP	In	12,470	3P:	7,118	Amps	5.21	Pos:	0.123	0.639
				SLG:	5,629	Amps	5.21	Zero:	0.220	1.146
UTIL-MIN	XFMR-UTP	In	12,470	3P:	5,776	Amps	3.64	Pos:	0.213	0.773
				SLG:	465	Amps	3.64	Zero:	7.491	27.237

Generators

Contribution From Name	Bus Name	In/Out Service	Nominal Voltage	Contribution Data			PU (100 MVA Base)	
				Base kVA	X"	X/R	R PU	X PU
GEN	GEN-BUS	In	480	188.00	0.11	3.39	17.25	58.51
					0.12	3.70	17.24	63.83
					0.07	2.16	17.25	37.23

Motors

Contribution From Name	# of Motors	Bus Name	In/Out Service	Nominal Voltage	Contribution Data			PU (100 MVA Base)	
					Base kVA	Xd"	X/R	R PU	X PU
MTR-MC12006E	1	MCC-12006E	In	480	25.22	0.3347	9.00	135.427	1,218.844
MTR-MCC12006	1	MCC-12006	In	480	19.17	0.3347	9.00	178.194	1,603.743
MTRS-MCC-2E	1	PNL-PE	In	480	50.44	0.3347	9.00	67.714	609.422
MTRS-MCC-3E	1	MCC-3E	In	480	65.07	0.2405	9.00	37.718	339.460
MTRS-MCC-4	1	SWBD-2	In	480	36.82	0.3347	9.00	92.758	834.825

Cables

Cable Name	From Bus To Bus	In/Out Service	Qty /Ph	Length Feet	Size	Cable Description Cond. Type	Duct Type	Insul	Per Unit (100 MVA Base)	R pu	jX pu
C-ATS	MCC-2	In	1	32	500	Copper	Magnetic		Pos:	0.4042	0.6667
	ATS								Zero:	1.2625	1.0611
C-ATS_E	GEN-BUS	In	1	20	500	Copper	Magnetic		Pos:	0.2526	0.4167
	ATS								Zero:	0.7891	0.6632
C-MCC-12006	SWBD-2	In	1	155	4-0	Copper	Magnetic		Pos:	4.2450	3.4310
	MCC-12006								Zero:	8.4362	7.3127
C-MCC-12006E	PNL-PE	In	1	255	1-0	Copper	Magnetic		Pos:	13.3034	6.0872
	MCC-12006E								Zero:	20.6191	14.3438
C-MCC-2	SWBD-1	In	3	35	500	Copper	Magnetic		Pos:	0.1474	0.2431
	MCC-2								Zero:	0.4603	0.3869
C-MCC-3E	PNL-PE	In	1	285	1-0	Copper	Magnetic		Pos:	14.8685	6.8034
	MCC-3E								Zero:	23.0449	16.0313
C-PNL-PE	ATS	In	1	38	500	Copper	Magnetic		Pos:	0.4799	0.7917
	PNL-PE								Zero:	1.4992	1.2601
C-SWBD-1	SWBD-2	In	3	218	500	Copper	Magnetic		Pos:	0.9178	1.5139
	SWBD-1								Zero:	2.8669	2.4096
C-SWBD-2	XFMR-UTS	In	5	195	500	Copper	Non-Magnetic		Pos:	0.4587	0.6602
	SWBD-2								Zero:	1.5387	1.0783

2-Winding Transformers

Xformer Name	In/Out Service	Primary & Secondary Bus	Conn.	Volts	FLA	Nominal kVA	Z PU (100 MVA Base)	R pu	jX pu
XFMR UTIL SEC	In	XFMR-UTP	WG	12,470	46	1,000.0	Pos:	1.0304	5.7077
		XFMR-UTS	WG	480	1,203		Zero:	1.0304	5.7077

TAB 8

Project Name: 1109105(Base Project)

ALL INFORMATION PRESENTED IS FOR REVIEW, APPROVAL, INTERPRETATION,
AND APPLICATION BY A REGISTERED ENGINEER ONLY.
SKM DISCLAIMS ANY RESPONSIBILITY AND LIABILITY RESULTING
FROM THE USE AND INTERPRETATION OF THIS SOFTWARE.

CAPTOR (Computer Aided Plotting for Time Overcurrent Reporting)
COPYRIGHT SKM SYSTEMS ANALYSIS, INC. 1983-2007

Device Name:	MCC 12006 MAIN	TCC Name:	
Bus Name:	MCC-12006	Bus Voltage:	480.0V
Function Name:	Phase		
Manufacturer:	GE		
Description:	70-250A		
Type:	SFLA, Spectra RMS		
AIC Rating:	65kA	Fault Duty:	10977.1A
Frame:	SFLA 480V 250A	Curve Multiplier:	1
Time Multiplier:	1	Time Adder:	0
Trip:	225A		
Setting: 1) MIN			

Device Name:	MCC 12006E MAIN	TCC Name:	
Bus Name:	MCC-12006E	Bus Voltage:	480.0V
Function Name:	Phase		
Manufacturer:	GE		
Description:	15-150A		
Type:	SELA, Spectra RMS		
AIC Rating:	65kA	Fault Duty:	5543.6A
Frame:	SELA 480V 150A	Curve Multiplier:	1
Time Multiplier:	1	Time Adder:	0
Trip:	150A		
Setting: 1) MIN			

Device Name:	FDR TO MCC 12006E	TCC Name:	
Bus Name:	PNL-PE	Bus Voltage:	480.0V
Function Name:	Phase		
Manufacturer:	GE		
Description:	70-250A		
Type:	SFLA, Spectra RMS		
AIC Rating:	65kA	Fault Duty:	13544.1A
Frame:	SFLA 480V 250A	Curve Multiplier:	1
Time Multiplier:	1	Time Adder:	0
Sensor:	150A		
Plug:	150A		

Setting: 1)	150A, LTPU/LTD	150A	(176.3A)
2)	150A, STPU/STD	MIN	(285A)
3)	150A, INST	MIN	(439.5A)

Device Name: FDR TO MCC 3E
TCC Name:
Bus Name: PNL-PE
Bus Voltage: 480.0V
Function Name: Phase
Manufacturer: GE
Description: 70-250A
Type: SFLA, Spectra RMS
AIC Rating: 65kA
Fault Duty: 13544.1A
Frame: SFLA 480V 250A
Curve Multiplier: 1
Time Multiplier: 1
Time Adder: 0
Sensor: 150A
Plug: 150A
Setting: 1) 150A, LTPU/LTD 150A (176.3A)
2) 150A, STPU/STD MIN (285A)
3) 150A, INST MIN (439.5A)

Device Name: FDR TO MCC 12006
TCC Name:
Bus Name: SWBD-2
Bus Voltage: 480.0V
Function Name: Phase
Manufacturer: GE
Description: 70-250A
Type: SFLA, Spectra RMS
AIC Rating: 65kA
Fault Duty: 19780.7A
Frame: SFLA 480V 250A
Curve Multiplier: 1
Time Multiplier: 1
Time Adder: 0
Sensor: 225A
Plug: 225A
Setting: 1) 225A, LTPU/LTD 225.0A (264.4A)
2) 225A, STPU/STD MIN (427.5A)
3) 225A, INST MIN (659.3A)

Device Name: PRI-FUSE
TCC Name:
Bus Name: XFMR-UTP
Bus Voltage: 12470.0V
Function Name: Phase
Manufacturer: COOPER
Description: C3-C18
Type: Bay-O-Net Dual Sensing Fuse Link
AIC Rating: 3kA
Fault Duty: 12952.2A
Cartridge: 358C14 15500V 65A
Curve Multiplier: 1
Time Multiplier: 1
Time Adder: 0
Size: 65A

Specification Section 16265

Variable Frequency Drives Low Voltage

16265 Variable Frequency
7.5HP ASU-8004 ,
25HP Pump1 Pump 2

GE

Built-in features
Built-in simplicity
Built for constant torque

AF-650 GP™ General Purpose Drives

a product of
ecomagination

imagination at work

AF-650 GP™ General Purpose Drives

Built for constant torque

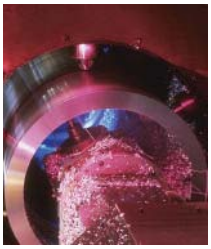

The AF-650 GP drive is designed for light and heavy duty control of mixers and material handling applications. It also provides vector modes (advanced, sensorless and closed loop) for those demanding torque applications.
It's just right for:

- Conveyors
- Mixers
- Agitators
- Lathes
- Spinning machines
- Machine tool
- Grinders
- Extruders
- Plastic injection molding machines
- Constant displacement pumps
- Woodworking machines

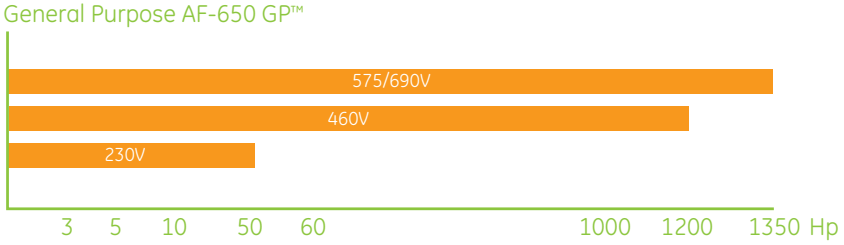

A rock-solid aluminum base is integrated with the back panel to provide high mechanical stability and the fan is quickly accessible to make cleaning easy.

- Available up to 50HP @ 208/230, up to 1200HP @ 460V, and up to 1350HP @ 575V and 690V
- Designed for ambient temperatures up to 50°C
- Built-in DC link reactor ensures very low harmonic disturbance of the power supply
- Compliance with major international standards CE, UL, cUL, C-Tick

Fully functional, fully ready

- Self protecting features
- 150% current overload up to 1 minute
- Flying start (catch a spinning motor)
- Precise stop function
- Electronic thermal overload
- Easy to use PC software
- Energy monitoring feature
- Modbus RTU built-in
- Speed and process PID controls
- Advanced brake control
- 24V encoder feedback built-in

Stand-alone drive types

For drives rated up to and including 100HP

- IP20/chassis
- IP21/NEMA 1 Field Installed Kit
- IP66/NEMA 4

For drives rated 125HP or more

- IP00/chassis
- IP21/NEMA 1

For all drives

- IP54 /55/NEMA 12

AF-650 GP™ General Purpose Drives

Built-in simplicity speeds set-up

The removable keypad, common to all AF-6 Series drives, is your window into all programming and information elements.

The keypad INFO key provides full-text, context-sensitive information to make programming easier and can eliminate the need for printed manuals. In most cases, start-up can be completed in less than 5 minutes – saving you valuable time.

You can set up one drive and then copy settings to other drives using the hot pluggable feature, eliminating the need for duplicate programming.

The Quick Menu provides easy access to all the basic settings and the controller.

- Hot pluggable
- Illuminated LCD display
- Parameters & their values
- Unit indications
- Rotation direction indication
- Set-up indication
- Custom user displays
- Trended charts display speed, torque, current
- Full alarm messages & descriptions

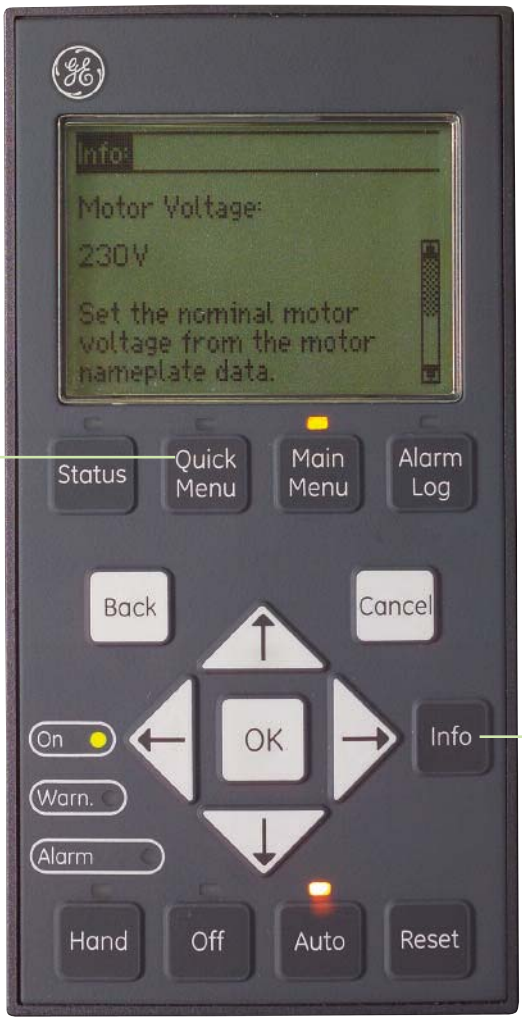

Actual size

AF-650 GP™ General Purpose Drives

Standard features

Control card

Terminal blocks	Pluggable, spring-loaded
Serial ports	RS485 and USB ports
Control inputs	4/6 digital, 2 analog, 2 pulse, 1 encoder, 24Vdc
Control outputs	2 relay, 1 analog, 2 pulse
Safe stop input	"Safe channel" meets the following global standards: EN954-1 according to category 0 of EN60204-1

Logic controller

Built-in sequencer that can eliminate the need for PLCs or timers
Easy to learn, program and debug

DCT-10 software

Familiar, intuitive interface
Option programming
On- and off-line utility
Real-time data collection
Process management interaction
USB, RS485 or Fieldbus communication
On-board help for each parameter
Logging of alarms and warnings
Easy fault history documentation

RFI filter

Reduces interference
A2 standard, A1 and B1 optional
Facilitates meeting CE EMC directives

DC Link Reactor

Low harmonic emission: THID < 48%
No voltage drop, full output voltage
Fulfills EN 61000-3-2/3-12
Displacement power factor (cos f ~ 1)
True power factor 0.9

Optional features

Plug-and-play option modules deliver application versatility so you can maximize performance and energy savings.

Networks

Top or bottom cable entry
Profibus, DeviceNet, Ethernet IP and Modbus TCP/IP

General purpose I/O

3 digital and 2 analog inputs
2 digital and 1 analog outputs

Encoder

Connects encoder feedback
Encoder module supports
Incremental encoders
Power supply for encoders – 5 VDC
RS 422 interface

Resolver	Supports brushless servo and flux vector controlled asynchronous motors Primary voltage 4 - 8 Vrms Primary frequency 2.5 kHz – 15 kHz Primary current max 50 mA rms Secondary input voltage 4 Vrms Resolution 10 bit @ 4 Vrms input amplitude
Relay	Adds 3 relay outputs AC-1 Resistive load 240VAC, 2A AC-15 Inductive load @ cos ? 0.4, 0.2 A DC-1 Resistive load 240V AC 1A DC-13 Inductive load @ cos ? 0.4, 0.1 A
Safe PLC interface	Maintains integrity of dual wire Safe PLC safety link Isolates safety link circuit from other standard logic inputs Eliminates interference with the Safe PLC safety link sense signal
24 Vdc supply	Powers control card and options Allows serial communication, control, programming and diagnostics during power outages Input voltage range: 24 V DC ± 15% (max. 37 V in 10 sec.) Max. input current: 2.2 A Input capacitance load: < 10 uF Power-up delay: < 0.6 s
Brake resistors	AF-650 GP only when purchased with optional built-in Brake Chopper Provides dynamic braking torque up to 160% 10% duty cycle / 120 sec period 40% duty cycle / 120 sec period
Line / load reactors	Filters switching frequency from drive output Reduces motor's audible noise Eliminates dV/dt and Vpeak motor insulation stresses Allows use of non-VFD rated motors
Harmonics filter	Reduces AC line current distortion Superior to 12 and 18 pulse solutions Supplements built-in DC Link Reactor Supported by GE harmonics calculation software
Backplate	Completes heatsink cooling air channel NEMA 1 (IP21) , NEMA 12 (IP55) IP65/66 (~NEMA 4)
Conformal coating	Protects electronics from aggressive atmospheres Tested to ANSI/ISA S71.04-1985, Classes G3 and GX

Accessories

Remote display kit	NEMA 4 (IP65) rating for remote mounting of keypad Preassembled cable
NEMA 1 kits	Converts IP20 chassis drive to IP21/NEMA 1 Includes field-installable top dust cover, bottom wiring box and bonding plate Fits all drives ≤125HP

AF-650 GP™ General Purpose Drives

Ratings, dimensions and specifications

Voltage	HP Rating	Output Current (A)	Efficiency		Watt Loss (W)	GE Unit Size	Type	Dimensions (in)			Weight (lbs)
			kHz	%				Height	Width	Dept	
230Vac	0.33	1.8	5	94	21	12	IP20	14.7	3.5	8.7	10.8
	0.5	2.4	5	94	29	12	IP20	14.7	3.5	8.7	10.8
	1	4.6	5	95	54	12	IP20	14.7	3.5	8.7	10.8
	2	7.5	5	96	82	12	IP20	14.7	3.5	8.7	10.8
	3	10.6	5	96	115	12	IP20	14.7	3.5	8.7	10.8
	5	16.7	5	96	185	13	IP20	14.7	5.1	8.7	14.55
	7.5	24.2	4	96.4	239	23	IP20	15.71	6.5	9.13	26.5
	10	30.8	4	95.9	371	23	IP20	15.71	6.5	9.13	26.5
	15	46.2	4	96.4	463	24	IP20	20.47	9.06	9.41	51.8
	20	59.4	3	96	621	33	IP20	24.8	12.13	13.15	77.2
	25	74.8	3	97	740	33	IP20	24.8	12.13	13.15	77.2
	30	88	3	97	874	34	IP20	31.5	14.57	13.15	110.2
	40	115	3	97	1143	34	IP20	31.5	14.57	13.15	110.2
	50	143	3	97	1400	34	IP20	31.5	14.57	13.15	110.2
460Vac	0.5	1.3	5	93	35	12	IP20	14.7	3.5	8.7	10.8
	1	2.4	5	96	46	12	IP20	14.7	3.5	8.7	10.8
	2	4.1	5	97	62	12	IP20	14.7	3.5	8.7	10.8
	3	5.6	5	97	88	12	IP20	14.7	3.5	8.7	10.8
	5	10	5	97	124	12	IP20	14.7	3.5	8.7	10.8
	7.5	13	5	97	187	13	IP20	14.7	5.1	8.7	14.55
	10	16	5	97	255	13	IP20	14.7	5.1	8.7	14.55
	15	24	4	98	291	23	IP20	15.71	6.5	9.13	26.5
	20	32	4	98	379	23	IP20	15.71	6.5	9.13	26.5
	25	37.5	4	98	444	24	IP20	20.47	9.06	9.41	51.8
	30	44	4	98	547	24	IP20	20.47	9.06	9.41	51.8
	40	61	3	98	570	24	IP20	20.47	9.06	9.41	51.8
	50	73	3	98	697	33	IP20	24.8	12.13	13.15	77.2
	60	90	3	98	891	33	IP20	24.8	12.13	13.15	77.2
	75	106	3	98	1022	34	IP20	31.5	14.57	13.15	110.2
	100	147	3	99	1232	34	IP20	31.5	14.57	13.15	110.2
	125	160	3	97	2641	43	IP00	39.3	16.1	14.7	200.6
	150	190	3	97	2995	43	IP00	39.3	16.1	14.7	200.6
	200	240	3	97	3425	44	IP00	50.3	16.1	14.7	304.2
	250	302	3	98	3910	44	IP00	50.3	16.1	14.7	304.2
	300	361	3	98	4625	44	IP00	50.3	16.1	14.7	304.2
	350	443	3	98	6005	52	IP00	59	23	19.5	611
	450	540	2	98	6960	52	IP00	59	23	19.5	611
	500	590	2	98	7691	52	IP00	59	23	19.5	611
	550	678	2	98	8636	52	IP00	59	23	19.5	611
	600	730	2	98	9492	61	IP21/NEMA 1	86.8	55.1	23.9	2214
	650	780	2	98	10631	61	IP21/NEMA 1	86.8	55.1	23.9	2214
	750	890	2	98	11263	61	IP21/NEMA 1	86.8	55.1	23.9	2214
	900	1050	2	98	13172	62	IP21/NEMA 1	86.8	71	23.9	2748
	1000	1160	2	98	14967	62	IP21/NEMA 1	86.8	71	23.9	2748
	1200	1380	2	98	16392	62	IP21/NEMA 1	86.8	71	23.9	2748

For 575/690Vac data, consult www.geelectrical.com/drives

Information provided is subject to change without notice. Please verify all details with GE. All values are design or typical values when measured under laboratory conditions, and GE makes no warranty or guarantee, express or implied, that such performance will be obtained under end-use conditions.

GE
41 Woodford Avenue
Plainville, CT 06062

www.geelectrical.com/drives

imagination at work

16265 Variable Frequency

DUAL DIMENSIONS INCHES (MILLIMETERS) (ESTIMATING ONLY)

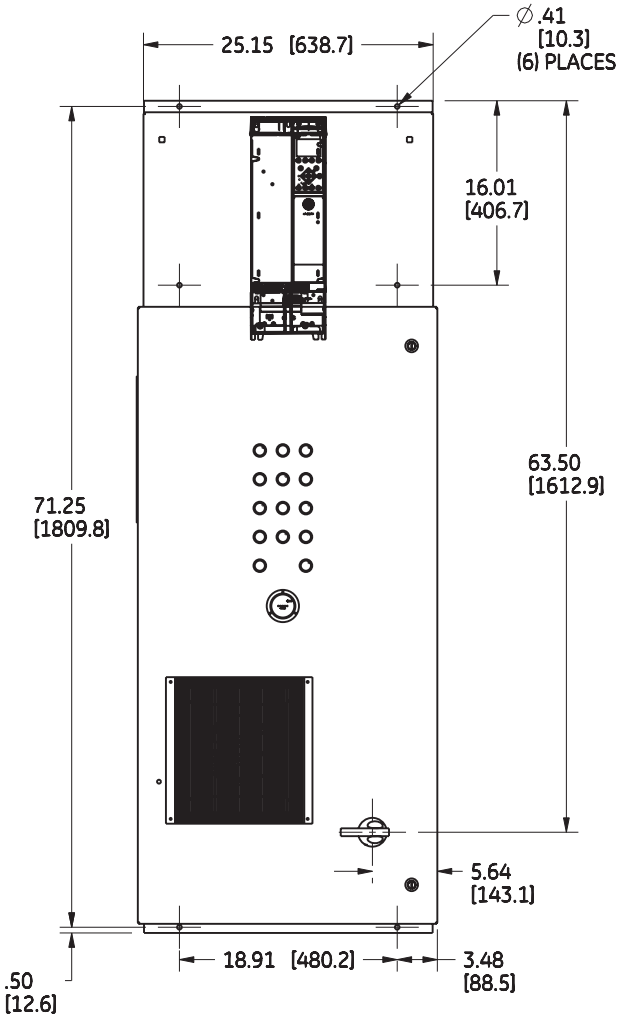

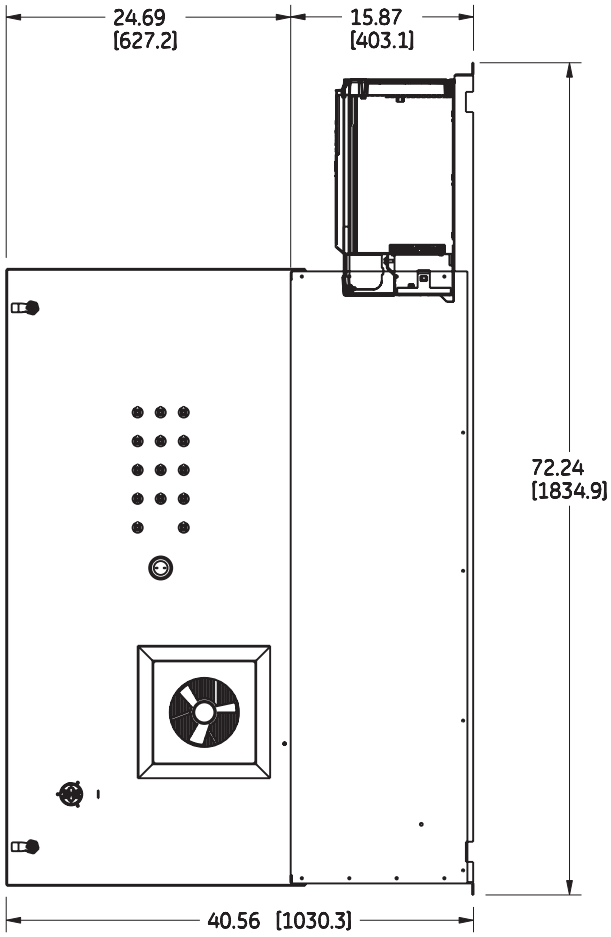

DOOR OPEN AT 90°

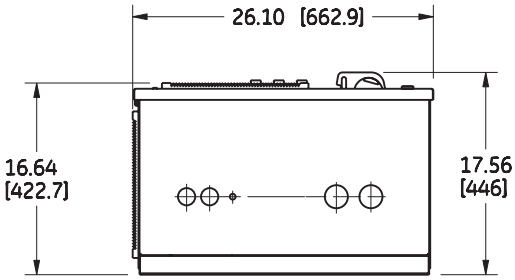

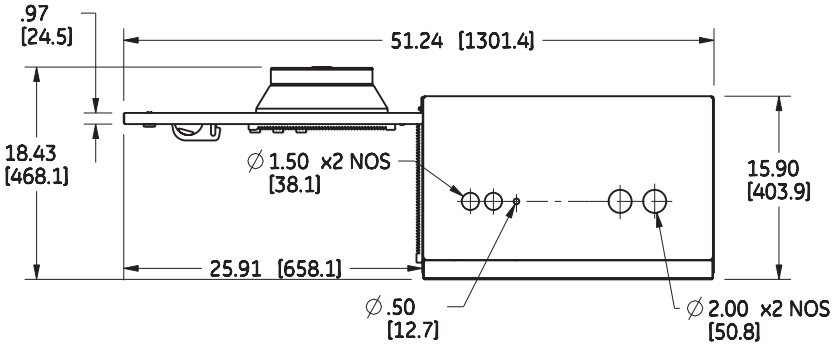

DOOR OPEN AT 180°

WEIGHT :391 LBS [177 KG]
1-10HP@208V & 1-20HP@460V

imagination at work

OUTLINE ENCLOSED DRIVES
AF 650 GP TYPE-1 HMR

AN #	THIRD ANGLE PROJECTION	SHEET #	DWG NO.	DATE	REV
09-3038		1 OF 1	55-217776	07/15/09	3

16265 Variable Frequency

DUAL DIMENSIONS INCHES (MILLIMETERS) (ESTIMATING ONLY)

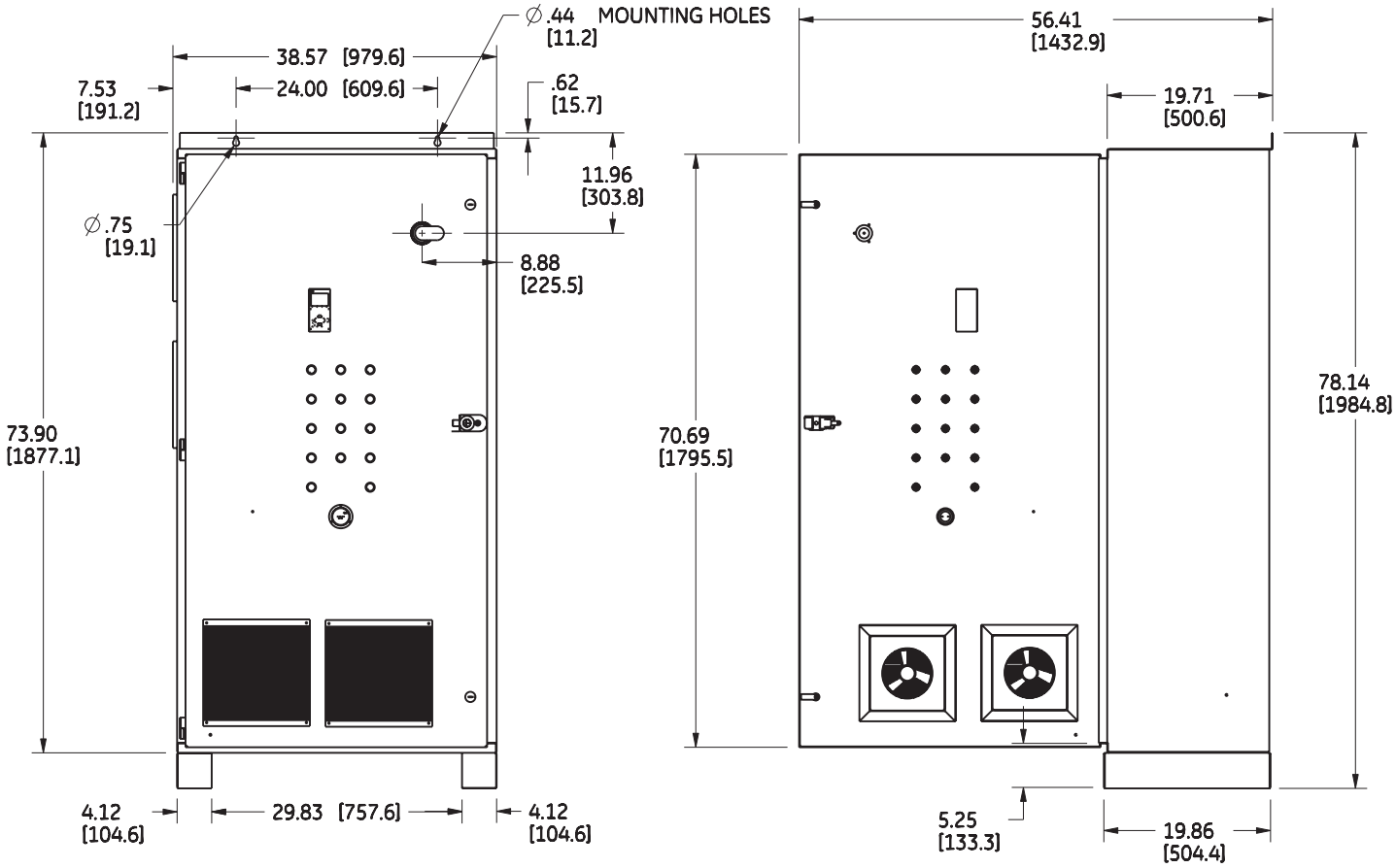

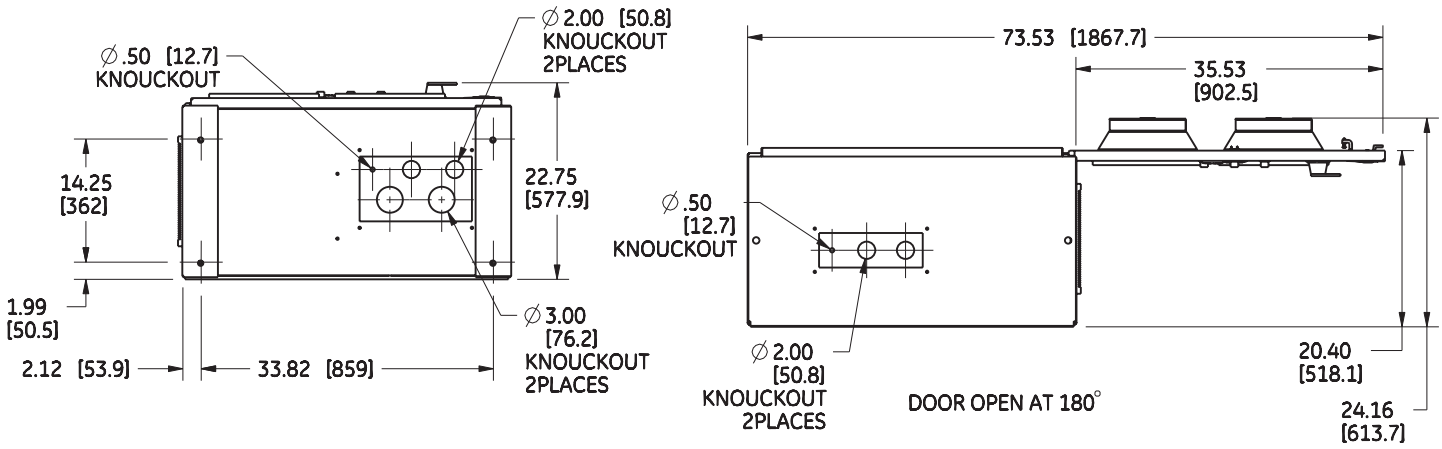

WEIGHT : 919 LBS [417 KGS]
15-30HP@208V & 25-60HP@460V

imagination at work

OUTLINE- ENCLOSED DRIVE
AF 650 GP TYPE-1 HMR

AN #	THIRD ANGLE PROJECTION	SHEET #	DWG NO.	DATE	REV
09-3038		1 OF 1	55-217777	07/15/08	3

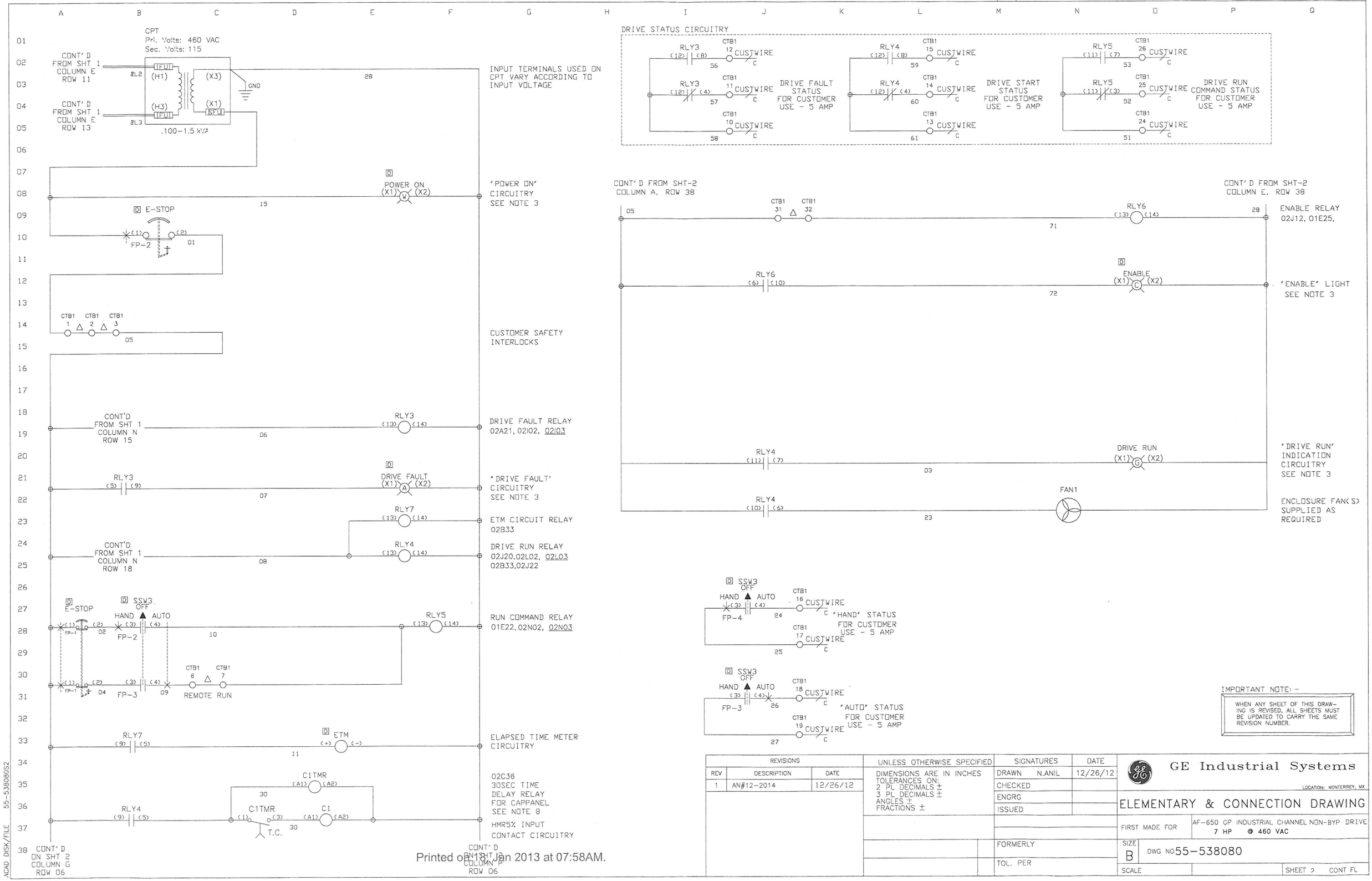

IMPORTANT NOTE: -

WHEN ANY SHEET OF THIS DRAWING IS REVISED, ALL SHEETS MUST BE UPDATED TO CARRY THE SAME REVISION NUMBER.

REVISIONS		
REV	DESCRIPTION	DATE
1	AN#12-2014	12/26/12

UNLESS OTHERWISE SPECIFIED
DIMENSIONS ARE IN INCHES
TOLERANCES ON:
2 PL DECIMALS ±
3 PL DECIMALS ±
ANGLES ±
FRACTIONS ±

SIGNATURES		DATE
DRAWN	N.ANIL	12/26/12
CHECKED		
ENGRG		
ISSUED		
FORMERLY		
TOL. PER		

GE Industrial Systems
LOCATION: MONTERREY, MX

ELEMENTARY & CONNECTION DRAWING

FIRST MADE FOR: AF-650 GP INDUSTRIAL CHANNEL NON-BYP DRIVE 7 HP @ 460 VAC

SIZE B | DWG NO 55-538080

SCALE | SHEET 2 | CONT FL

ACAD DISK/FILE 55-538080S2

Printed on 18 Jan 2013 at 07:58AM.

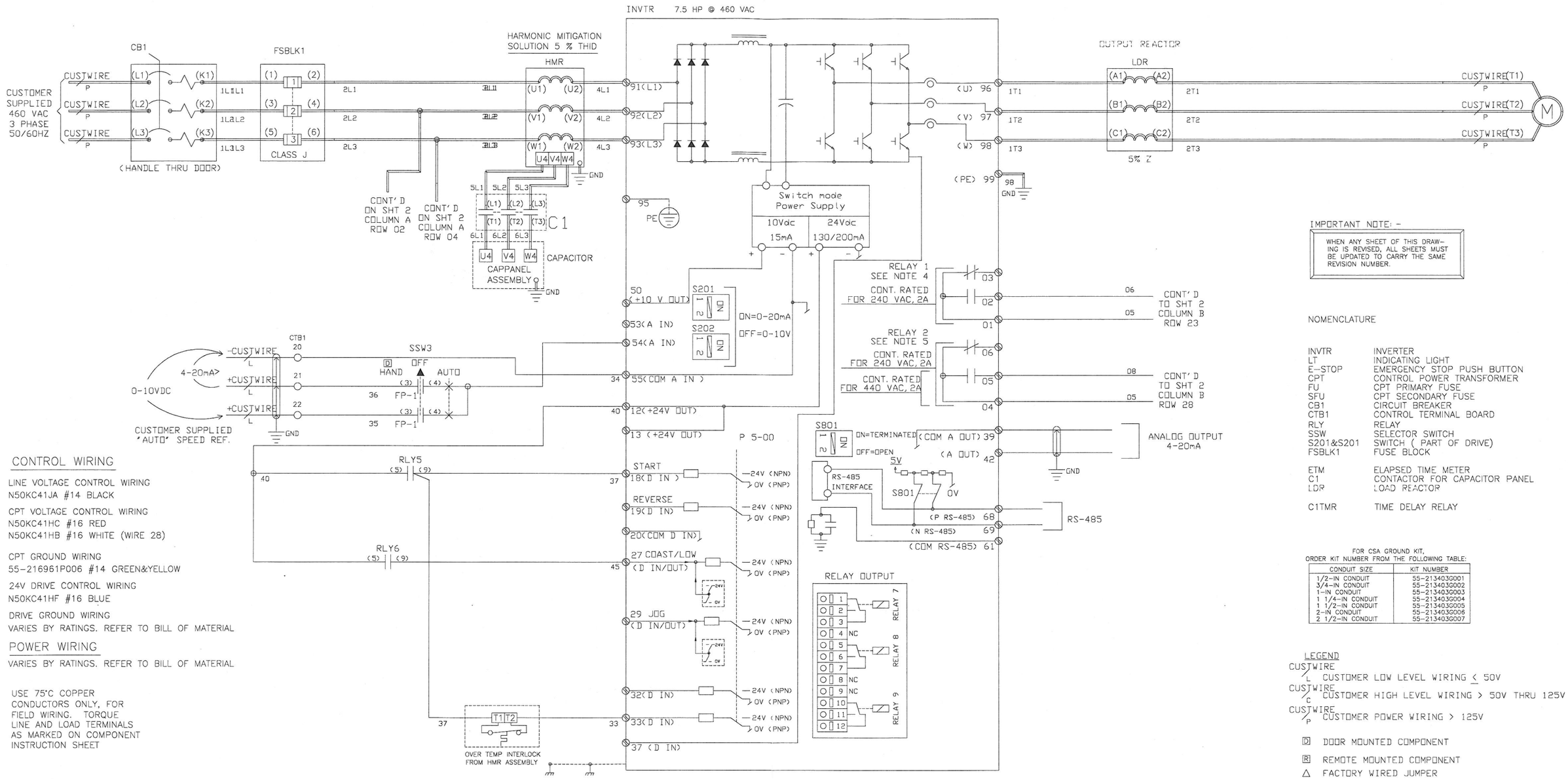

CONTROL WIRING

LINE VOLTAGE CONTROL WIRING
N50KC41JA #14 BLACK

CPT VOLTAGE CONTROL WIRING
N50KC41HC #16 RED
N50KC41HB #16 WHITE (WIRE 28)

CPT GROUND WIRING
55-216961P006 #14 GREEN&YELLOW

24V DRIVE CONTROL WIRING
N50KC41HF #16 BLUE

DRIVE GROUND WIRING
VARIES BY RATINGS. REFER TO BILL OF MATERIAL

POWER WIRING

VARIES BY RATINGS. REFER TO BILL OF MATERIAL

USE 75°C COPPER CONDUCTORS ONLY, FOR FIELD WIRING. TORQUE LINE AND LOAD TERMINALS AS MARKED ON COMPONENT INSTRUCTION SHEET

NOTES:

4. RELAY1 PROGRAMMED FOR FAULT INDICATION
5. RELAY2 PROGRAMMED FOR DRIVE RUN INDICATION
6. DRIVE INPUT SIGNALS ARE SHOWN FOR 'PNP' (SOURCE) LOGIC.

8. THIS TIMER NEED TO BE SET IN THE FIELD BASED ON THE MOTOR CHARACTERISTIC. (FACTORY SETTING WILL BE MAX 30 SEC)

NOTES:

1. DC LINK REACTOR (DCR) IS BUILT INTO THE DRIVE.
3. PILOT DEVICE LAYOUT

PILOT DEVICE LAYOUT		
POWER ON-(W)	DRIVE FAULT-(A)	DRIVE RUN-(G)
ENABLE-(C)	HAND-OFF-AUTO	NOT USED
NOT USED	NOT USED	NOT USED
NOT USED	NOT USED	E-STOP
NOT USED	NOT USED	NOT USED

IMPORTANT NOTE: -

WHEN ANY SHEET OF THIS DRAWING IS REVISED, ALL SHEETS MUST BE UPDATED TO CARRY THE SAME REVISION NUMBER.

NOMENCLATURE

INVTR	INVERTER
LT	INDICATING LIGHT
E-STOP	EMERGENCY STOP PUSH BUTTON
CPT	CONTROL POWER TRANSFORMER
FU	CPT PRIMARY FUSE
SFU	CPT SECONDARY FUSE
CB1	CIRCUIT BREAKER
CTB1	CONTROL TERMINAL BOARD
RLY	RELAY
SSW	SELECTOR SWITCH
S201&S201	SWITCH (PART OF DRIVE)
FSBLK1	FUSE BLOCK
ETM	ELAPSED TIME METER
C1	CONTACTOR FOR CAPACITOR PANEL
LDR	LOAD REACTOR
C1TMR	TIME DELAY RELAY

FOR CSA GROUND KIT, ORDER KIT NUMBER FROM THE FOLLOWING TABLE:

CONDUIT SIZE	KIT NUMBER
1/2-IN CONDUIT	55-2134036001
3/4-IN CONDUIT	55-2134036002
1-IN CONDUIT	55-2134036003
1 1/4-IN CONDUIT	55-2134036004
1 1/2-IN CONDUIT	55-2134036005
2-IN CONDUIT	55-2134036006
2 1/2-IN CONDUIT	55-2134036007

LEGEND

CUSTWIRE/L CUSTOMER LOW LEVEL WIRING ≤ 50V
CUSTWIRE/C CUSTOMER HIGH LEVEL WIRING > 50V THRU 125V
CUSTWIRE/P CUSTOMER POWER WIRING > 125V

D DOOR MOUNTED COMPONENT
R REMOTE MOUNTED COMPONENT
△ FACTORY WIRED JUMPER

REVISIONS		
REV	DESCRIPTION	DATE
1	AN#12-2014	12/26/12

UNLESS OTHERWISE SPECIFIED
DIMENSIONS ARE IN INCHES
TOLERANCES ON:
2 PL DECIMALS ±
3 PL DECIMALS ±
ANGLES ±
FRACTIONS ±

SIGNATURES		DATE
DRAWN	N.ANIL	12/26/12
CHECKED		
ENGRG		
ISSUED		
FORMERLY		
TOL. PER		

GE Industrial Systems
LOCATION: MONTERREY, MX

ELEMENTARY & CONNECTION DRAWING

FIRST MADE FOR: AF-650 GP INDUSTRIAL CHANNEL NON-BYP DRIVE 7 HP @ 460 VAC

SIZE B | DWG NO 55-538080 | SCALE | SHEET 1 CONT 2

Printed on 18, Jan 2013 at 07:57AM.

GE Consumer & Industrial
Electrical Distribution

AF-650 GP™
General Purpose Drive
(230V to 50HP, 460/575V to 100HP)

Operating Instructions

imagination at work

Contents

1 How to Read these Operating Instructions 3

Approvals 3
Symbols 4
Abbreviations 4

2 Safety Instructions and General Warning 5

High Voltage 5
Avoid Unintended Start 7
Safe Stop of AF-650 GP 7
Safe Stop Installation 8
IT Mains 8

3 How to Install 9

Mechanical Installation 14
Electrical Installation 16
Connection to Mains and Earthing 17
Motor Connection 19
Fuses 22
Electrical Installation, Control Terminals 26
Connection Examples 27
Electrical Installation, Control Cables 28
Switches S201, S202, and S801 31
Additional Connections 34
Mechanical Brake Control 34
Motor Thermal Protection 34
How to Connect a PC to the frequency converter 35
The AF-650 GP PC Software 35

4 How to Program 37

The Graphical Keypad 37
How to Program on the Graphical Keypad 37
Quick Setup Parameter List 39
Parameter Lists 46
K-## Keypad Set-up 47
F-## Fundamental Parameters 48
E-## Digital In/Outs 49
C-## Frequency Control Functions 51
P-## Motor Data 52
H-## High Perf Parameters 53
AN-## Analog In / Out 55
SP-## Special Functions 56

O-## Options/Comms 57
DN-## DevicNet 58
PB-## Profibus 59
ID-## Drive Information 60
DR-## Data Readouts 62
LC-## Logic Controller 64
B-## Braking Functions 65
PI-## PID Controls 66
EC-## Feedback Option 67
RS-## Resolver Interface 68

5 General Specifications 69
Electrical Data - 200-240 V 69
Electrical Data - 380-500 V 71
Electrical Data - 525-600 V 74

6 Troubleshooting 83
Warnings/Alarm Messages 83

Index 90

1 How to Read these Operating Instructions

1.1.1 How to Read these Operating Instructions

AF-650 GP is designed to provide high shaft performance on electrical motors. Please read this manual carefully for proper use. Incorrect handling of the frequency converter may cause improper operation of the frequency converter or related equipment, shorten lifetime or cause other troubles.

These Operating Instructions will help you get started, install, program, and troubleshoot your AF-650 GP.
. AF-650 GP is a high performance frequency converter for asynchronous as well as permanent motors and handles various kinds of motor control principles such as volts/hertz, advanced vector control, sensorless vector, and full flux vector control.

Chapter 1, **How to Read these Operating Instructions**, introduces the manual and informs you about the approvals, symbols, and abbreviations used in this literature.

Chapter 2, **Safety Instructions and General Warnings**, entails instructions on how to handle the AF-650 GP correctly.

Chapter 3, **How to Install**, guides you through mechanical and technical installation.

Chapter 4, **How to Program**, shows you how to operate and program the AF-650 GP via the Keypad.

Chapter 5, **General Specifications**, contains technical data about AF-650 GP.

Chapter 6, **Troubleshooting**, assists you in solving problems that may occur when using AF-650 GP.

Available Literature for AF-650 GP

- The AF-650 GP Design Guide entails all technical information about the drive design and applications including encoder, resolver and relay options.
- The AF-650 GP Profibus Operating Instructions provide the information required for controlling, monitoring and programming the drive via a Profibus network.
- The AF-650 GP DeviceNet Operating Instructions provide the information required for controlling, monitoring and programming the drive via a DeviceNet network.
- The AF-650 GP DCT 10 Operating Instructions provide information for installation and use of the software on a PC.
- The AF-650 GP IP21 / Nema 1 kit Instruction provides information for installing the IP21 / Nema 1 field installed option kits..
- The AF-650 GP 24 V DC Backup Instruction provides information for installing the 24 V DC Backup option.

GE technical literature is also available online at www.geelectrical/drives.

1.1.2 Approvals

1.1.3 Symbols

Symbols used in this Operating Instructions.

NB!
Indicates something to be noted by the reader.

Indicates a general warning.

Indicates a high-voltage warning.

* Indicates default setting

1.1.4 Abbreviations

Alternating current	AC
American wire gauge	AWG
Ampere/AMP	A
Current limit	I_{LIM}
Degrees Celsius	°C
Direct current	DC
Drive Control Tool PC Software	DCT 10
Drive Dependent	D-TYPE
Electro Magnetic Compatibility	EMC
Electronic Thermal Overload	Elec. OL
Gram	g
Hertz	Hz
Kilohertz	kHz
Meter	m
Millihenry Inductance	mH
Milliampere	mA
Millisecond	ms
Minute	min
Nanofarad	nF
Newton Meters	Nm
Nominal motor current	$I_{M,N}$
Nominal motor frequency	$f_{M,N}$
Nominal motor power	$P_{M,N}$
Nominal motor voltage	$U_{M,N}$
Parameter	par.
Protective Extra Low Voltage	PELV
Printed Circuit Board	PCB
Rated Inverter Output Current	I_{INV}
Revolutions Per Minute	RPM
Regenerative terminals	Regen
Second	s
Synchronous Motor Speed	n_s
Torque limit	T_{LIM}
Volts	V

2 Safety Instructions and General Warning

Equipment containing electrical components may not be disposed of together with domestic waste.
It must be separately collected with electrical and electronic waste according to local and currently valid legislation.

The DC link capacitors remain charged after power has been disconnected. To avoid electrical shock hazard, disconnect the frequency converter from mains before carrying out maintenance. When using a PM-motor, make sure it is disconnected. Before doing service on the frequency converter wait at least the amount of time indicated below:

380 - 500 V	0.25 - 7.5 kW	4 minutes
	11 - 75 kW	15 minutes
	90 - 200 kW	20 minutes
	250 - 800 kW	40 minutes
525 - 690 V	37 - 315 kW	20 minutes
	355 - 1000 kW	30 minutes

AF-650 GP

Operating Instructions

Software version: 4.9x

These Operating Instructions can be used for all AF-650 GP frequency converters with software version 4.9x.
The software version number can be seen from par. ID-43 Software *Version*.

2.1.1 High Voltage

The voltage of the frequency converter is dangerous whenever the frequency converter is connected to mains. Incorrect installation or operation of the motor or frequency converter may cause damage to the equipment, serious personal injury or death. The instructions in this manual must consequently be observed, as well as applicable local and national rules and safety regulations.

Installation in high altitudes
380 - 500 V: At altitudes above 3 km, please contact GE regarding PELV.
525 - 690 V: At altitudes above 2 km, please contact GE regarding PELV.

The voltage of the frequency converter is dangerous whenever connected to mains. Incorrect installation of the motor, frequency converter or network may cause damage to the equipment, serious personal injury or death. Consequently, the instructions in this manual, as well as national and local rules and safety regulations, must be complied with.

Safety Regulations

1. The mains supply to the frequency converter must be disconnected whenever repair work is to be carried out. Check that the mains supply has been disconnected and that the necessary time has elapsed before removing motor and mains supply plugs.
2. The [OFF] button on the control panel of the frequency converter does not disconnect the mains supply and consequently it must not be used as a safety switch.
3. The equipment must be properly earthed, the user must be protected against supply voltage and the motor must be protected against overload in accordance with applicable national and local regulations.
4. The earth leakage current exceeds 3.5 mA.
5. Protection against motor overload is not included in the factory setting. If this function is desired, set par. F-10 *Electronic Overload* to data value Elec. OL trip 1 [4] or data value Elec. OL warning 1 [3].
6. Do not remove the plugs for the motor and mains supply while the frequency converter is connected to mains. Check that the mains supply has been disconnected and that the necessary time has elapsed before removing motor and mains plugs.
7. Please note that the frequency converter has more voltage sources than L1, L2 and L3, when load sharing (linking of DC intermediate circuit) or external 24 V DC are installed. Check that all voltage sources have been disconnected and that the necessary time has elapsed before commencing repair work.

2.1.2 General Warning

Warning:
Touching the electrical parts may be fatal - even after the equipment has been disconnected from mains.
Also make sure that other voltage inputs have been disconnected, such as load-sharing (linkage of DC intermediate circuit), as well as the motor connection for kinetic back-up.
Using AF-650 GP: wait at least 15 minutes.
Shorter time is allowed only if indicated on the nameplate for the specific unit.

Leakage Current
The earth leakage current from the frequency converter exceeds 3.5 mA. To ensure that the earth cable has a good mechanical connection to the earth connection (terminal 95), the cable cross section must be at least 10 mm^2 or 2 times rated earth wires terminated separately.
Residual Current Device
This product can cause a D.C. current in the protective conductor. Where a residual current device (RCD) is used for extra protection, only an RCD of Type B (time delayed) shall be used on the supply side of this product.
Protective earthing of the AF-650 GP and the use of RCD's must always follow national and local regulations.

NB!
For vertical lifting or hoisting applications it is strongly recommended to ensure that the load can be stopped in case of an emergency or a malfunction of a single part such as a contactor, etc.
If the frequency converter is in alarm mode or in an over voltage situation, the mechanical brake cuts in.

2.1.3 Before Commencing Repair Work

1. Disconnect the frequency converter from mains
2. Disconnect DC bus terminals 88 and 89 from load share applications
3. Wait for discharge of the DC-link. See period of time on the warning label
4. Remove motor cable

2.1.4 Avoid Unintended Start

While the frequency converter is connected to mains, the motor can be started/stopped using digital commands, bus commands, references or via the Keypad.

- Disconnect the frequency converter from mains whenever personal safety considerations make it necessary to avoid unintended start.
- To avoid unintended start, always activate the [OFF] key before changing parameters.
- An electronic fault, temporary overload, a fault in the mains supply, or lost motor connection may cause a stopped motor to start. Frequency converter with Safe Stop provides protection against unintended start, if the Safe Stop Terminal 37 is on low voltage level or disconnected.

2.1.5 Safe Stop of AF-650 GP

The AF-650 GP can perform the safety function *Safe Torque Off* (As defined by IEC 61800-5-2) or *Stop Category 0* (as defined in EN 60204-1).

It is designed and approved suitable for the requirements of Safety Category 3 in EN 954-1. This functionality is called Safe Stop. Prior to integration and use of Safe Stop in an installation, a thorough risk analysis on the installation must be carried out in order to determine whether the Safe Stop functionality and safety category are appropriate and sufficient. In order to install and use the Safe Stop function in accordance with the requirements of Safety Category 3 in EN 954-1, the related information and instructions of the AF-650 GP Design Guide must be followed! The information and instructions of the Operating Instructions are not sufficient for a correct and safe use of the Safe Stop functionality!

2.1.6 Safe Stop Installation

To carry out an installation of a Category 0 Stop (EN60204) in conformance with Safety Category 3 (EN954-1), follow these instructions:

1. The bridge (jumper) between Terminal 37 and 24 V DC must be removed. Cutting or breaking the jumper is not sufficient. Remove it entirely to avoid short-circuiting. See jumper on illustration.
2. Connect terminal 37 to 24 V DC by a short-circuit protected cable. The 24 V DC voltage supply must be interruptible by an EN954-1 Category 3 circuit interrupt device. If the interrupt device and the frequency converter are placed in the same installation panel, you can use a regular cable instead of a protected one.
3. The Safe Stop function only fulfills EN 954-1 Category 3 if it is protected by a Nema 12 or Nema 4 drive. Open Chassis or Nema 1 drives must be mounted in a Nema 12 or higher cabinet to meet protection requirements for the Safe Stop functionality.

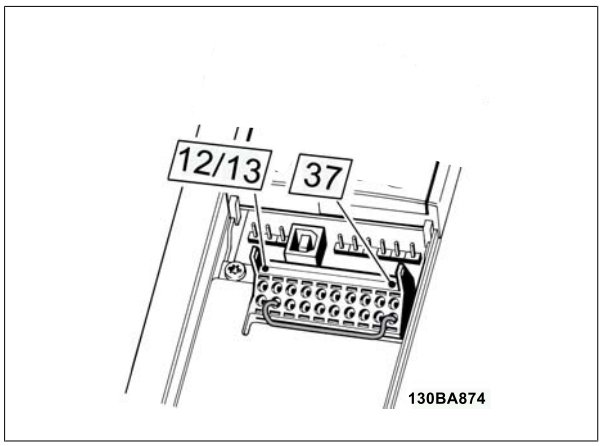

Illustration 2.1: Bridge jumper between terminal 37 and 24 VDC

The illustration below shows a Stopping Category 0 (EN 60204-1) with safety Category 3 (EN 954-1). The circuit interrupt is caused by an opening door contact. The illustration also shows how to connect a non-safety related hardware coast.

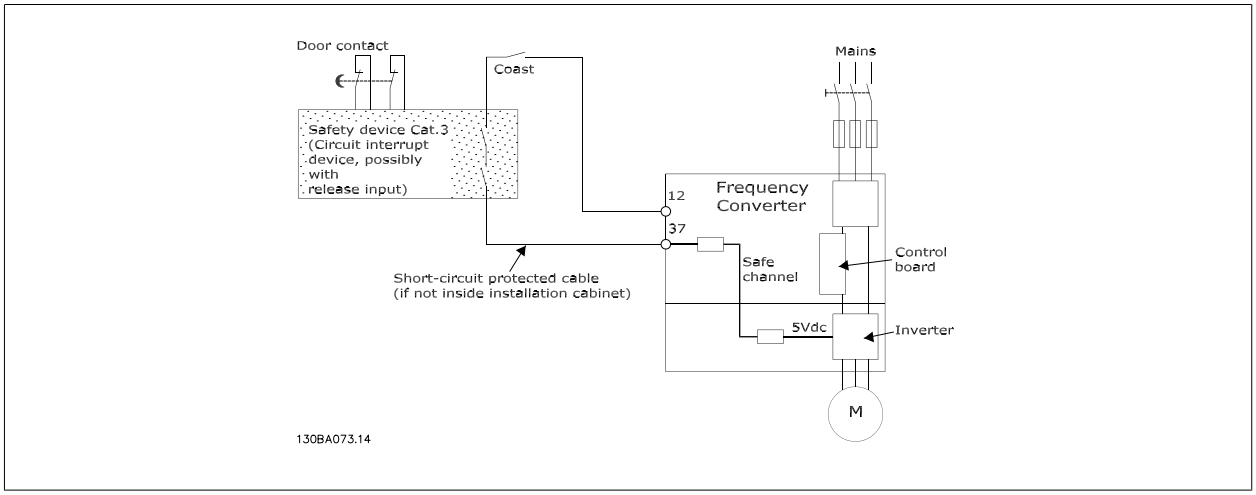

Illustration 2.2: Illustration of the essential aspects of an installation to achieve a Stopping Category 0 (EN 60204-1) with safety Category 3 (EN 954-1).

2.1.7 IT Mains

par. SP-50 RFI *Filter* can be used to disable the factory installed A1/B1 RFI filter option. If this is done it will reduce the RFI performance to A2 level. For the 525 - 690 V frequency converters, par. SP-50 RFI *Filter* is not available as there is no A1/B1 Factory Installed RFI Filter option.

3 How to Install

3.1.1 About How to Install

This chapter covers mechanical and electrical installations to and from power terminals and control card terminals.
Electrical installation of *options* is described in the relevant Operating Instructions and Design Guide.

3.1.2 How to Get Started

AF-650 GP is designed to achieve a quick installation by following the steps described below.

Read the safety instructions before installing the unit.

Mechanical Installation

- Mechanical mounting

Electrical Installation

- Connection to Mains and Protecting Earth
- Motor connection and cables
- Fuses and circuit breakers
- Control terminals - cables

Quick setup

- Keypad
- Auto Tuning of drive
- Programming

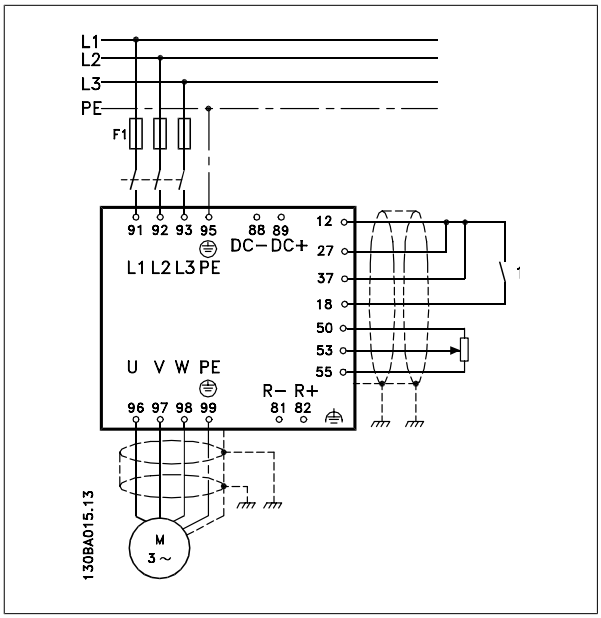

Illustration 3.1: Diagram showing basic installation including mains, motor, start/stop key, and potentiometer for speed adjustment.

3

Mechanical Dimensions, 1X Unit Sizes

12/13

15

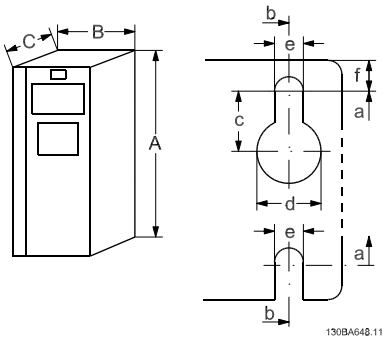

Unit Sizes		12		13		15
		0.25-3 kW (200-240 V) 0.37-4.0 kW (380-480/ 500 V) 0.75-4 kW (525-600 V)		3.7 kW (200-240 V) 5.5-7.5 kW (380-480/ 500 V) 5.5-7.5 kW (525-600 V)		0.25-3.7 kW (200-240 V) 0.37-7.5 kW (380-480/ 500 V) 0.75-7.5 kW (525-600 V)
IP		20	21	20	21	55/66
NEMA		Chassis	Nema 1	Chassis	Nema 1	Nema 12/Nema 4
Height						
Height of back plate	A	268 mm	375 mm	268 mm	375 mm	420 mm
Height with de-coupling plate	A	374 mm		374 mm	-	-
Distance between mounting holes	a	257 mm	350 mm	257 mm	350 mm	402 mm
Width						
Width of back plate	B	90 mm	90 mm	130 mm	130 mm	242 mm
Width of back plate with one C option	B	130 mm	130 mm	170 mm	170 mm	242 mm
Width of back plate with two C options	B	150 mm	150 mm	190 mm	190 mm	242 mm
Distance between mounting holes	b	70 mm	70 mm	110 mm	110 mm	215 mm
Depth						
Depth without option A/B	C	205 mm	207 mm	205 mm	207 mm	195 mm
With option A/B	C	220 mm	222 mm	220 mm	222 mm	195 mm
Screw holes						
	c	8.0 mm	8.0 mm	8.0 mm	8.0 mm	8.25 mm
	d	ø11 mm	ø11 mm	ø11 mm	ø11 mm	ø12 mm
	e	ø5.5 mm	ø5.5 mm	ø5.5 mm	ø5.5 mm	ø6.5 mm
	f	9 mm	9 mm	9 mm	9 mm	9 mm
Max weight		4.9 kg	5.3 kg	6.6 kg	7.0 kg	13.5/14.2 kg

Mechanical Dimensions, 2X Unit Sizes

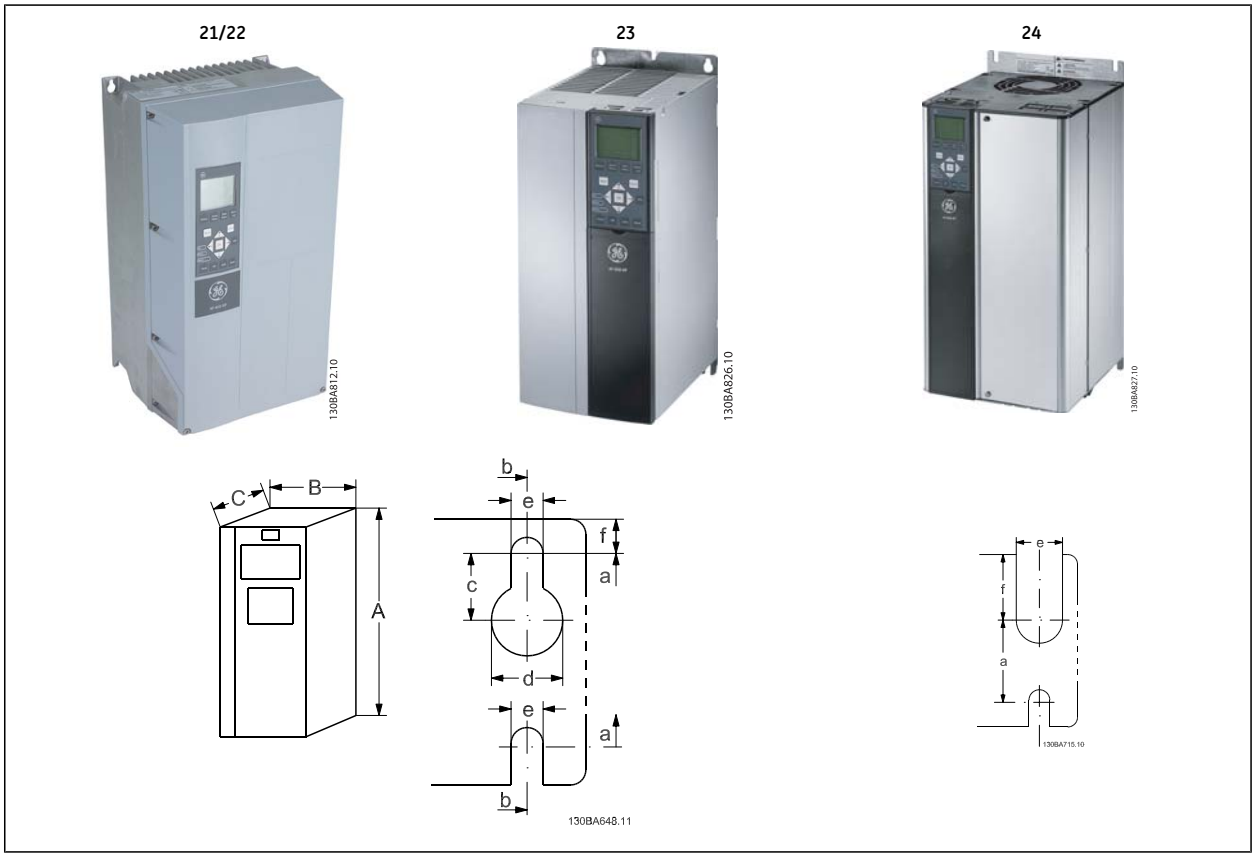

Unit Sizes		21	22	23	24
		5.5-7.5 kW (200-240 V) 11-15 kW (380-480/500 V) 11-15 kW (525-600 V)	11 kW (200-240 V) 18.5-22 kW (380-480/ 500 V) 18.5-22 kW (525-600 V)	5.5-7.5 kW (200-240 V) 11-15 kW (380-480/500 V) 11-15 kW (525-600 V)	11-15 kW (200-240 V) 18.5-30 kW (380-480/ 500 V) 18.5-30 kW (525-600 V)
IP		21/ 55/66	55/66	20	20
NEMA		Nema 1/Nema 12	Nema 12/Nema 4	Chassis	Chassis
Height					
Height of back plate	A	480 mm	650 mm	399 mm	520 mm
Height with de-coupling plate	A	-	-	420 mm	595 mm
Distance between mounting holes	a	454 mm	624 mm	380 mm	495 mm
Width					
Width of back plate	B	242 mm	242 mm	165 mm	230 mm
Width of back plate with one C option	B	242 mm	242 mm	205 mm	230 mm
Width of back plate with two C options	B	242 mm	242 mm	225 mm	230 mm
Distance between mounting holes	b	210 mm	210 mm	140 mm	200 mm
Depth					
Depth without option A/B	C	260 mm	260 mm	249 mm	242 mm
With option A/B	C	260 mm	260 mm	262 mm	242 mm
Screw holes					
	c	12 mm	12 mm	8 mm	
	d	ø19 mm	ø19 mm	12 mm	
	e	ø9 mm	ø9 mm	6.8 mm	8.5 mm
	f	9 mm	9 mm	7.9 mm	15 mm
Max weight		23 kg	27 kg	12 kg	23.5 kg

3

Mechanical Dimensions,3X Unit Sizes

31/ 32

33/ 34

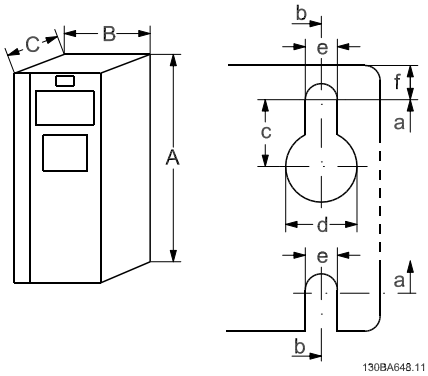

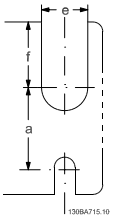

Unit Sizes		**31**	**32**	**33**	**34**
		15-22 kW (200-240 V) 30-45 kW (380-480/ 500 V) 30-45 kW (525-600 V)	**30-37 kW (200-240 V) 55-75 kW (380-480/ 500 V) 55-90 kW (525-600 V)**	**18.5-22 kW (200-240 V) 37-45 kW (380-480/ 500 V) 37-45 kW (525-600 V)**	**30-37 kW (200-240 V) 55-75 kW (380-480/ 500 V) 55-90 kW (525-600 V)**
IP		55/66	55/66	20	20
NEMA		Nema 12/Nema 4	Nema 12/Nema 4	Chassis	Chassis
Height					
Height of back plate	A	680 mm	770 mm	550 mm	660 mm
Height with de-coupling plate	A			630 mm	800 mm
Distance between mounting holes	a	648 mm	739 mm	521 mm	631 mm
Width					
Width of back plate	B	308 mm	370 mm	308 mm	370 mm
Width of back plate with one C option	B	308 mm	370 mm	308 mm	370 mm
Width of back plate with two C options	B	308 mm	370 mm	308 mm	370 mm
Distance between mounting holes	b	272 mm	334 mm	270 mm	330 mm
Depth					
Depth without option A/B	C	310 mm	335 mm	333 mm	333 mm
With option A/B	C	310 mm	335 mm	333 mm	333 mm
Screw holes					
	c	12.5 mm	12.5 mm		
	d	ø19 mm	ø19 mm		
	e	ø9 mm	ø9 mm	8.5 mm	8.5 mm
	f	9.8 mm	9.8 mm	17 mm	17 mm
Max weight		45 kg	65 kg	35 kg	50 kg

Accessory Bags: Find the following parts included in the frequency converter accessory bags

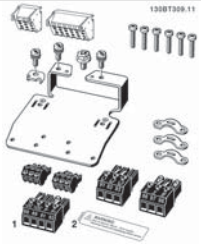

Unit Sizes 22 and 23, IP20 Open Chassis

Unit Size 15, Nema 12 or Nema 4

Unit Sizes 21 and 22
IP55/Type 12

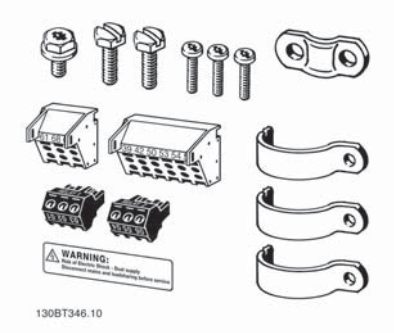

Unit Size 23, IP20 Open Chassis

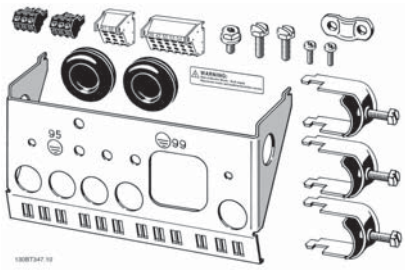

Unit Size 24, IP20 Open Chassis

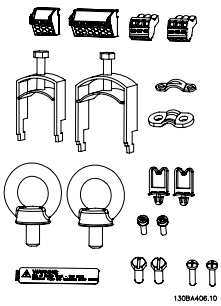

Unit Sizes 31 and 32, IP55/Nema 12, IP66/Nema 4

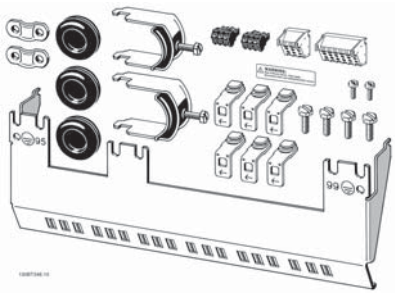

Unit Size 23, IP20 Open Chassis

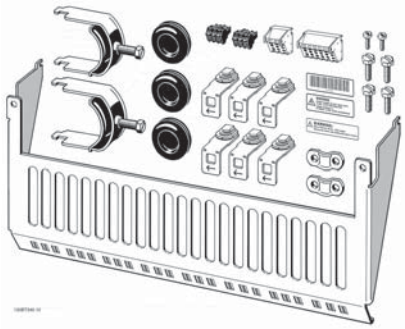

Unit Size 24, IP20 Open Chassis

1 + 2 only available in units with brake chopper. For DC link connection (Load sharing) the connector 1 can be ordered separately

3.2 Mechanical Installation

3.2.1 Mechanical mounting

All IP20 .

3

If the P21/Nema 1 field installed option kits are installed, there must be a clearance of a minimum of 50mm or 2 inches between drives.

For optimal cooling conditions allow a free air passage above and below the frequency converter. See table below.

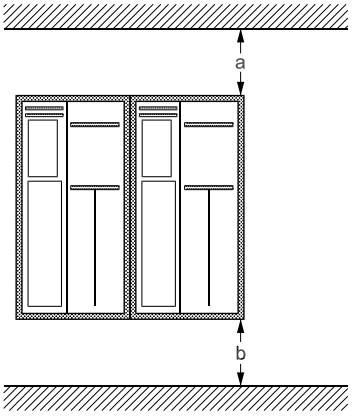

Air passage for different Unit Sizes

Unit Size:	12	13	15	21	22	23	24	31	32	33	34
a (mm):	100	100	100	200	200	200	200	200	225	200	225
b (mm):	100	100	100	200	200	200	200	200	225	200	225

Table 3.1:

1. Drill holes in accordance with the measurements given.
2. You must provide screws suitable for the surface on which you want to mount the frequency converter. Retighten all four screws.

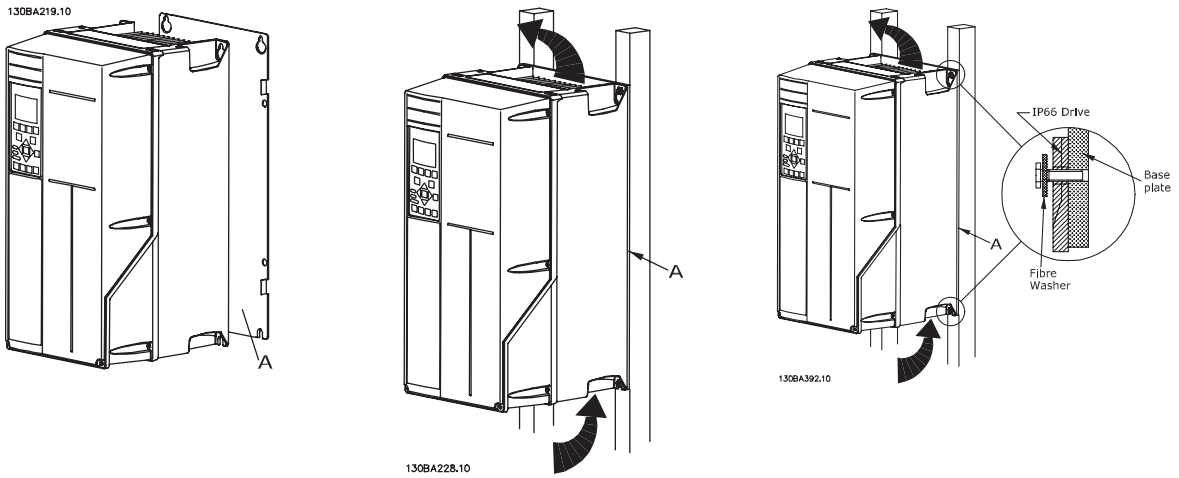

Table 3.2: Mounting Unit Sizes 15, 21, 22, 23, 24, 31, 32, 33 and 34 on a non-solid back wall, the drive must be provided with a back plate A due to insufficient cooling air over the heat sink.

3.2.2 Panel Through Mounting

A Panel Through Mount Kit is available for frequency converter series AF-600 FP, .

In order to increase heatsink cooling and reduce panel depth, the frequency converter may be mounted in a through panel. Furthermore the in-built fan can then be removed.

The kit is available for Unit Sizes 15 through 32 (230V, 1/3 to 50HP and 460V/575V 1/2 to 100HP) .

NB!
This kit cannot be used with cast front covers. No cover or imminent plastic cover must be used instead.

For more information please contact GE.

3.3 Electrical Installation

NB!

Cables General

All cabling must comply with national and local regulations on cable cross-sections and ambient temperature. Copper (60/75°C) conductors are recommended.

3

Aluminium Conductors

Terminals can accept aluminium conductors but the conductor surface has to be clean and the oxidation must be removed and sealed by neutral acid-free Vaseline grease before the conductor is connected.

Furthermore the terminal screw must be retightened after two days due to softness of the aluminium. It is crucial to keep the connection a gas tight joint, otherwise the aluminium surface will oxidize again.

Tightening-up Torque

Unit Size	200 - 240 V	380 - 500 V	525 - 690 V	Cable for:	Tightening up torque
11	0.25-1.5 kW	0.37-1.5 kW	-	Mains, Brake resistor, load sharing, Motor cables	0.5-0.6 Nm
12	0.25-2.2 kW	0.37-4 kW	0.75-4 kW		
13	3-3.7 kW	5.5-7.5 kW	5.5-7.5 kW		
15	3-3.7 kW	5.5-7.5 kW	0.75-7.5 kW		
21	5.5-7.5 kW	11-15 kW	-	Mains, Brake resistor, load sharing, Motor cables	1.8 Nm
				Relay	0.5-0.6 Nm
				Earth	2-3 Nm
22	11 kW	18.5-22 kW	-	Mains, Brake resistor, load sharing cables	4.5 Nm
				Motor cables	4.5 Nm
				Relay	0.5-0.6 Nm
				Earth	2-3 Nm
23	5.5-7.5 kW	11-15 kW	-	Mains, Brake resistor, load sharing, Motor cables	1.8 Nm
				Relay	0.5-0.6 Nm
				Earth	2-3 Nm
24	11-15 kW	18.5-30 kW	-	Mains, Brake resistor, load sharing, Motor cables	4.5 Nm
				Relay	0.5-0.6 Nm
				Earth	2-3 Nm
31	15-22 kW	30-45 kW	-	Mains, Brake resistor, load sharing cables	10 Nm
				Motor cables	10 Nm
				Relay	0.5-0.6 Nm
				Earth	2-3 Nm
32	30-37 kW	55-75 kW	-	Mains, motor cables	14 Nm (up to 95 mm^2) 24 Nm (over 95 mm^2)
				Load Sharing, brake cables	14 Nm
				Relay	0.5-0.6 Nm
				Earth	2-3 Nm
33	18.5-22 kW	30-37 kW	-	Mains, Brake resistor, load sharing, Motor cables	10 Nm
				Relay	0.5-0.6 Nm
				Earth	2-3 Nm
34	37-45 kW	55-75 kW	-	Mains, motor cables	14 Nm (up to 95 mm^2) 24 Nm (over 95 mm^2)
				Load Sharing, brake cables	14 Nm
				Relay	0.5-0.6 Nm
				Earth	2-3 Nm

3.3.1 Removal of Knockouts for Extra Cables

1. Remove cable entry from the frequency converter (Avoiding foreign parts falling into the frequency converter when removing knockouts)
2. Cable entry has to be supported around the knockout you intend to remove.
3. The knockout can now be removed with a strong mandrel and a hammer.
4. Remove burrs from the hole.
5. Mount Cable entry on frequency converter.

3.3.2 Connection to Mains and Earthing

NB!
The plug connector for power is plugable on frequency converters up to 7.5 kW.

1. Fit the two screws in the de-coupling plate, slide it into place and tighten the screws.
2. Make sure the frequency converter is properly earthed. Connect to earth connection (terminal 95). Use screw from the accessory bag.
3. Place plug connector 91(L1), 92(L2), 93(L3) from the accessory bag onto the terminals labelled MAINS at the bottom of the frequency converter.
4. Attach mains wires to the mains plug connector.
5. Support the cable with the supporting enclosed brackets.

NB!
Check that mains voltage corresponds to the mains voltage of the name plate.

IT Mains
Do not connect 400 V frequency converters with RFI-filters to mains supplies with a voltage between phase and earth of more than 440 V.

The earth connection cable cross section must be at least 10 mm^2 or 2 x rated mains wires terminated separately according to EN 50178.

The mains connection is fitted to the mains switch if this is included.

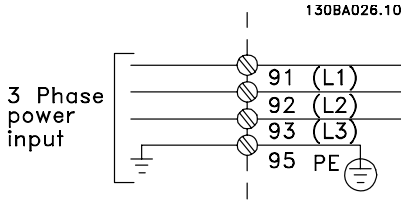

Mains connection for Unit Sizes 12 and 13 IP20 Open Chassis drive types (230V to 5HP, 460V/575V to 10HP):

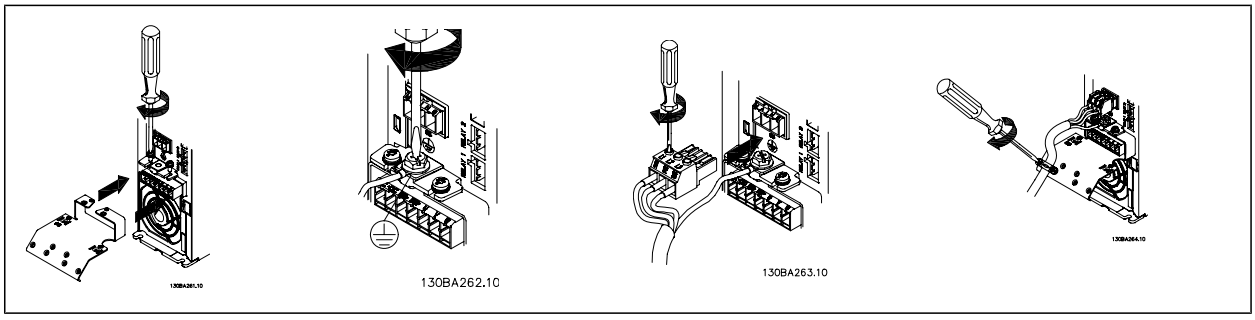

Mains connector (IP 55/66)Unit Size 15 Nema 12 or Nema 4 drive types (230V to 5HP, 460V/575V to 10HP)

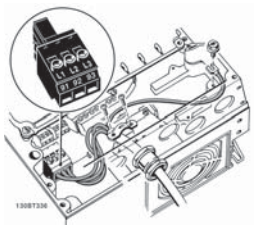

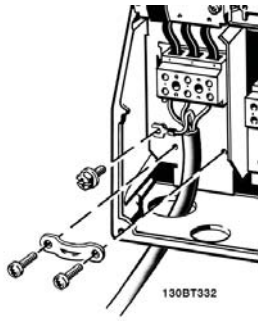

Illustration 3.2: Mains connection for unit sizes 21 and 22 Nema 12 or Nema 4 drive types (230V, 7.5 to 15HP, 460V/575V, 15 to 30HP).

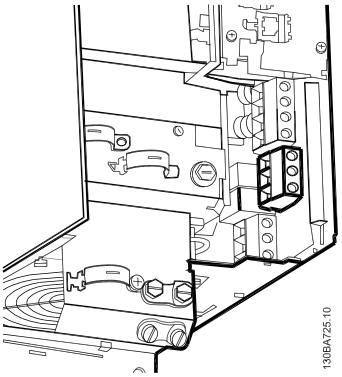

Illustration 3.3: Mains connection for unit size 23 IP20 Open Chassis drive type (230V, 7.5 to 10HP, 460V/575V, 15 to 25HP).

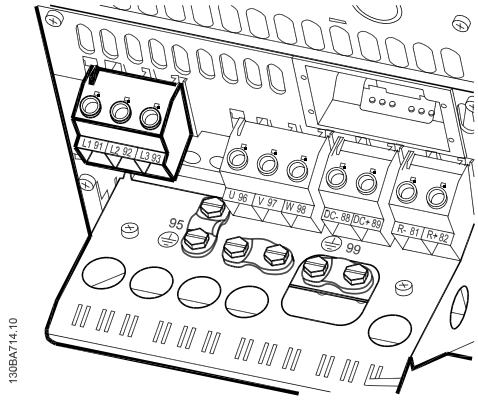

Illustration 3.4: Mains connection for unit size 24 IP20 Open Chassis drive type (230V, 15 to 20HP, 460V/575V, 25 to 40HP).

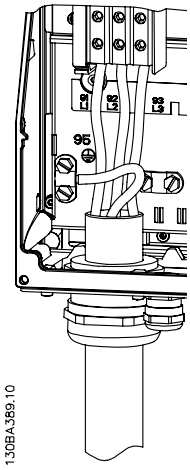

Illustration 3.5: Mains connection for unit sizes 31 and 32 Nema 12 or Nema 4 drive types (230V, 20 to 50HP, 460V, 40 to 100HP, 575V, 40 to 125HP).

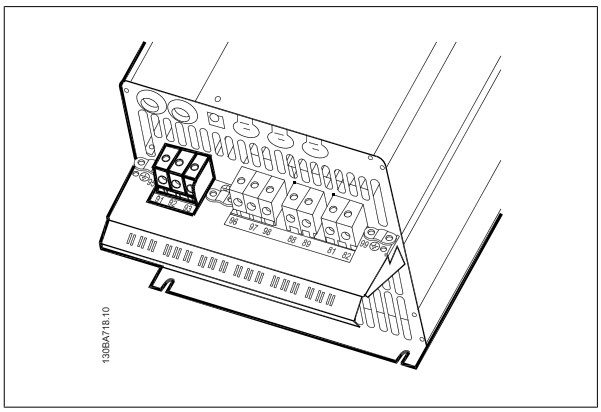

Illustration 3.6: Mains connection for unit size 33 IP20 Open Chassis drive type (230V, 25 to 30HP, 460V/575V, 50 to 60HP).

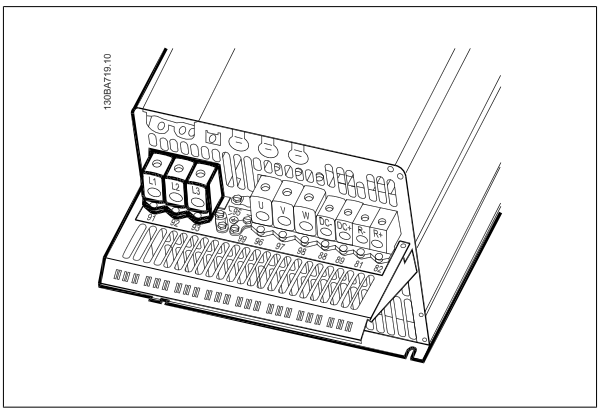

Illustration 3.7: Mains connection for unit size 34 IP20 Open Chassis drive type (230V, 40 to 50HP, 460V, 75 to 100HP, 575V, 75 to 125HP).

3.3.3 Motor Connection

NB!
Use a screened/armoured motor cable to comply with EMC emission specifications. For more information, see *EMC Test Results*.

See section General Specifications for correct dimensioning of motor cable cross-section and length.

Screening of cables: Avoid installation with twisted screen ends (pigtails). If it is necessary to break the screen to install a motor isolator or motor contactor, the screen must be continued at the lowest possible HF impedance.
Connect the motor cable screen to both the decoupling plate of the frequency converter and to the metal housing of the motor.
Make the screen connections with the largest possible surface area (cable clamp). This is done by using the supplied installation devices in the frequency converter.
If it is necessary to split the screen to install a motor isolator or motor relay, the screen must be continued with the lowest possible HF impedance.

Cable-length and cross-section: The frequency converter has been tested with a given length of cable and a given cross-section of that cable. If the cross-section is increased, the cable capacitance - and thus the leakage current - may increase, and the cable length must be reduced correspondingly. Keep the motor cable as short as possible to reduce the noise level and leakage currents.

Switching frequency: When frequency converters are used together with Sine-wave filters to reduce the acoustic noise from a motor, the switching frequency must be set according to the Sine-wave filter instruction in par. F-26 Motor *Noise (Carrier Freq)*.

1. Fasten decoupling plate to the bottom of the frequency converter with screws and washers from the accessory bag.
2. Attach motor cable to terminals 96 (U), 97 (V), 98 (W).
3. Connect to earth connection (terminal 99) on decoupling plate with screws from the accessory bag.
4. Insert plug connectors 96 (U), 97 (V), 98 (W) (up to 7.5 kW) and motor cable to terminals labelled MOTOR.
5. Fasten screened cable to decoupling plate with screws and washers from the accessory bag.

All types of three-phase asynchronous standard motors can be connected to the frequency converter. Normally, small motors are star-connected (230/400 V, Y). Large motors are normally delta-connected (400/690 V, Δ). Refer to the motor name plate for correct connection mode and voltage.

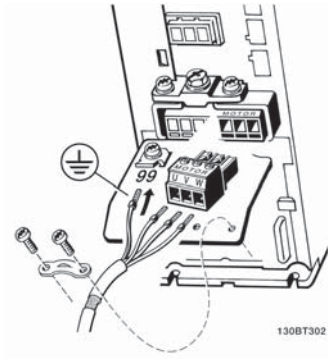

Illustration 3.8: Motor connection for units sizes 12 and 13 IP20 Open Chassis drive types (230V to 5HP, 460V/575V to 10HP)

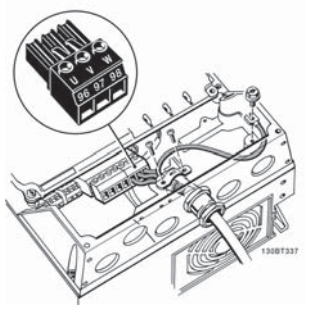

Illustration 3.9: Motor connection for unit size 15 Nema 12 or Nema 4 drive types (230V to 5HP, 460V/575V to 10HP)

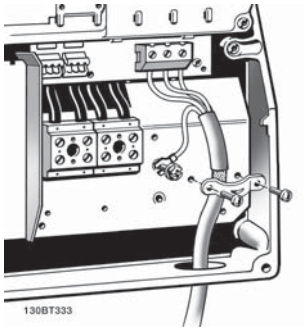

Illustration 3.10: Motor connection for unit sizes 21 and 22 Nema 12 or Nema 4 drive types (230V, 7.5 to 15HP, 460V/575V, 15 to 30HP)

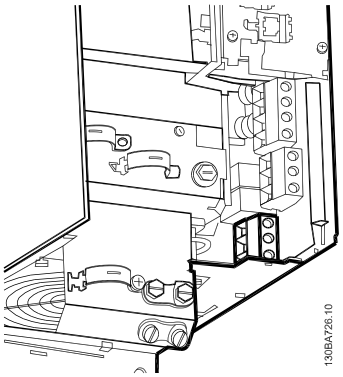

Illustration 3.11: Motor connection for for unit size 23 IP20 Open Chassis drive type (230V, 7.5 to 10HP, 460V/575V, 15 to 25HP).

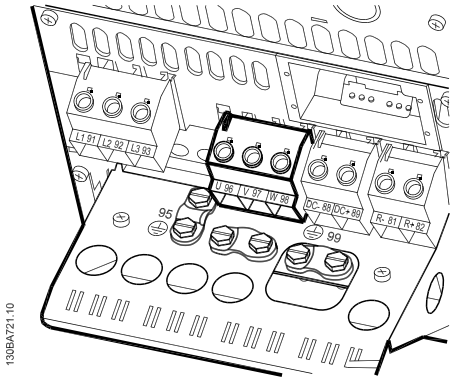

Illustration 3.12: Motor connection for for unit size 24 IP20 Open Chassis drive type (230V, 15 to 20HP, 460V/575V, 25 to 40HP).

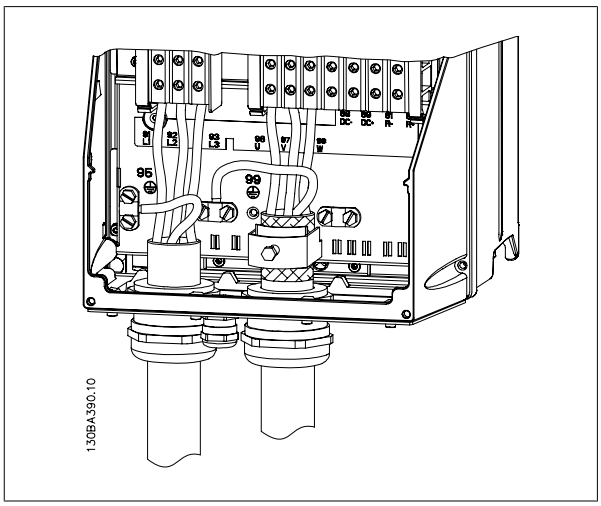

Illustration 3.13: Motor connection for unit sizes 31 and 32 Nema 12 or Nema 4 drive types (230V, 20 to 50HP, 460V, 40 to 100HP, 575V, 40 to 125HP)

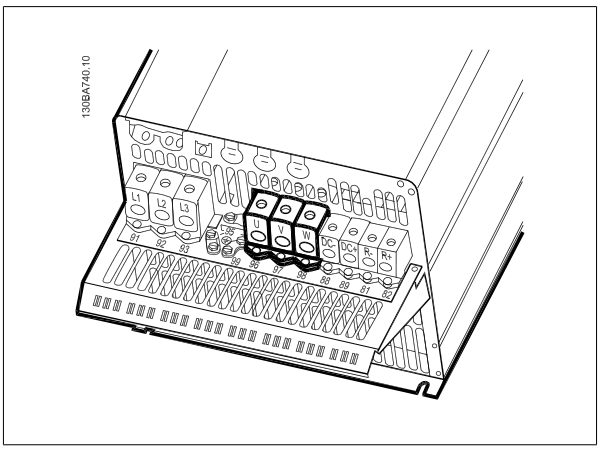

Illustration 3.14: Motor connection for unit sizes 33 and 34 IP20 Open Chassis drive types (230V, 25 to 50HP, 460V, 50 to 100HP, 575V, 50 to 125HP).

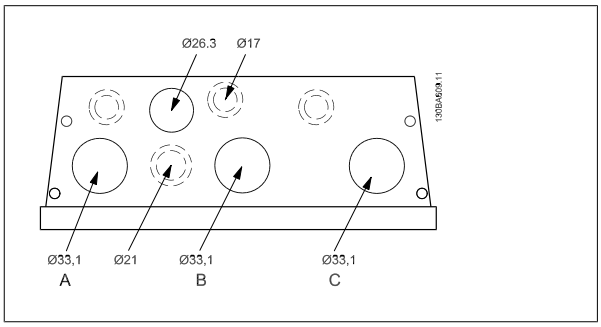

Illustration 3.15: Cable entry holes for unit size 21. The suggested use of the holes are purely recommendations and other solutions are possible.

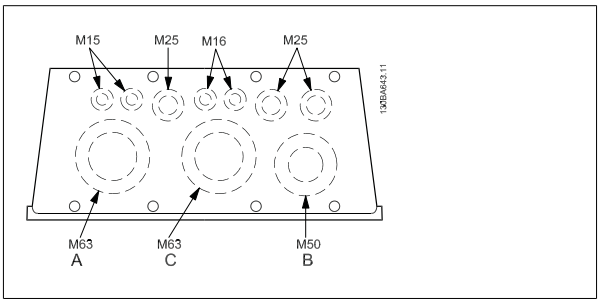

Illustration 3.17: Cable entry holes for unit size 31. The suggested use of the holes are purely recommendations and other solutions are possible.

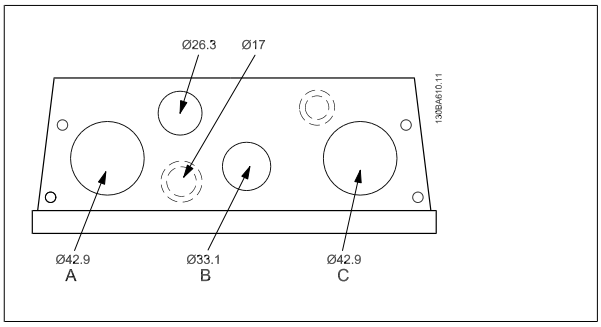

Illustration 3.16: Cable entry holes for unit size 22. The suggested use of the holes are purely recommendations and other solutions are possible.

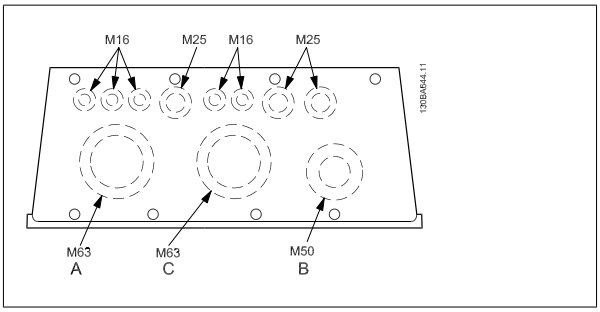

Illustration 3.18: Cable entry holes for unit size 32. The suggested use of the holes are purely recommendations and other solutions are possible.

Term. no.	96	97	98	99	
	U	V	W	PE[1)]	Motor voltage 0-100% of mains voltage. 3 wires out of motor
	U1 W2	V1 U2	W1 V2	PE[1)]	Delta-connected 6 wires out of motor
	U1	V1	W1	PE[1)]	Star-connected U2, V2, W2 U2, V2 and W2 to be interconnected separately.

[1)]Protected Earth Connection

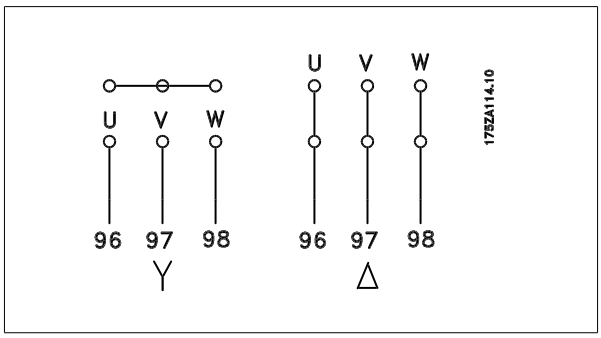

3.3.4 Fuses

Branch circuit protection:

In order to protect the installation against electrical and fire hazard, all branch circuits in an installation, switch gear, machines etc., must be short-circuited and overcurrent protected according to national/international regulations.

Short-circuit protection:

The frequency converter must be protected against short-circuit to avoid electrical or fire hazard. GE recommends using the fuses mentioned below to protect service personnel and equipment in case of an internal failure in the drive. The frequency converter provides full short-circuit protection in case of a short-circuit on the motor output.

Overcurrent protection:

Provide overload protection to avoid fire hazard due to overheating of the cables in the installation. Fuses or circuit breakers can be used to provide the overcurrent protection in the installation. Overcurrent protection must always be carried out according to national regulations.

The AF-650 GP drive is suitable in a circuit capable of supplying a maximum of 100,000 A_{rms} (symmetrical), 500 V maximum.

Non UL compliance

If UL/cUL is not to be complied with, we recommend using the following fuses, which will ensure compliance with EN50178:
In case of malfunction, not following the recommendation may result in unnecessary damage to the frequency converter.

AF-650 GP	Max. fuse size[1)]	Voltage	Type
1/3 to 1 HP	10A	200-240 V	type gG
2 to 3 HP	20A	200-240 V	type gG
5 HP	32A	200-240 V	type gG
7.5 to 10 HP	63A	380-500 V	type gG
15 HP	80A	380-500 V	type gG
20 to 25 HP	125A	380-500 V	type gG
30 HP	160A	380-500 V	type aR
40 HP	200A	380-500 V	type aR
50 HP	250A	380-500 V	type aR

1) Max. fuses - refer to national/international regulations to select an appropriate fuse size.

AF-650 GP	Max. fuse size[1)]	Voltage	Type
3 to 5 HP	10A	380-500 V	type gG
3 to 5 HP	20A	380-500 V	type gG
7.5 to 10 HP	32A	380-500 V	type gG
15 to 25 HP	63A	380-500 V	type gG
30 HP	80A	380-500 V	type gG
40 HP	100A	380-500 V	type gG
50 HP	125A	380-500 V	type gG
60 HP	160A	380-500 V	type aR
75 to 100 HP	250A	380-500 V	type aR

UL Compliance

200-240 V

AF-650 GP	Bussmann	Bussmann	Bussmann	Bussmann	Bussmann	Bussmann
HP	Type RK1	Type J	Type T	Type CC	Type CC	Type CC
1/3 to 1/2 HP	KTN-R05	JKS-05	JJN-06	FNQ-R-5	KTK-R-5	LP-CC-5
1 HP	KTN-R10	JKS-10	JJN-10	FNQ-R-10	KTK-R-10	LP-CC-10
2 HP	KTN-R15	JKS-15	JJN-15	FNQ-R-15	KTK-R-15	LP-CC-15
3 HP	KTN-R20	JKS-20	JJN-20	FNQ-R-20	KTK-R-20	LP-CC-20
5 HP	KTN-R30	JKS-30	JJN-30	FNQ-R-30	KTK-R-30	LP-CC-30
7.5 HP	KTN-R50	KS-50	JJN-50	-	-	-
10 HP	KTN-R60	JKS-60	JJN-60	-	-	-
15 HP	KTN-R80	JKS-80	JJN-80	-	-	-
20 to 25 HP	KTN-R125	JKS-150	JJN-125	-	-	-

AF-650 GP	SIBA	Littel fuse	Ferraz-Shawmut	Ferraz-Shawmut
HP	Type RK1	Type RK1	Type CC	Type RK1
1/3 to 1/2 HP	5017906-005	KLN-R05	ATM-R05	A2K-05R
1 HP	5017906-010	KLN-R10	ATM-R10	A2K-10R
2 HP	5017906-016	KLN-R15	ATM-R15	A2K-15R
3 HP	5017906-020	KLN-R20	ATM-R20	A2K-20R
5 HP	5012406-032	KLN-R30	ATM-R30	A2K-30R
7.5 HP	5014006-050	KLN-R50	-	A2K-50R
10 HP	5014006-063	KLN-R60	-	A2K-60R
15 HP	5014006-080	KLN-R80	-	A2K-80R
20 to 25 HP	2028220-125	KLN-R125	-	A2K-125R

AF-650 GP	Bussmann	SIBA	Littel fuse	Ferraz-Shawmut
HP	Type JFHR2	Type RK1	JFHR2	JFHR2
30 HP	FWX-150	2028220-150	L25S-150	A25X-150
40 HP	FWX-200	2028220-200	L25S-200	A25X-200
50 HP	FWX-250	2028220-250	L25S-250	A25X-250

KTS-fuses from Bussmann may substitute KTN for 240 V frequency converters.

FWH-fuses from Bussmann may substitute FWX for 240 V frequency converters.

KLSR fuses from LITTEL FUSE may substitute KLNR fuses for 240 V frequency converters.

L50S fuses from LITTEL FUSE may substitute L50S fuses for 240 V frequency converters.

A6KR fuses from FERRAZ SHAWMUT may substitute A2KR for 240 V frequency converters.

A50X fuses from FERRAZ SHAWMUT may substitute A25X for 240 V frequency converters.

380-500 V

AF-650 GP	Bussmann	Bussmann	Bussmann	Bussmann	Bussmann	Bussmann
HP	Type RK1	Type J	Type T	Type CC	Type CC	Type CC
1/2 to 1 HP	KTS-R6	JKS-6	JJS-6	FNQ-R-6	KTK-R-6	LP-CC-6
2 to 3 HP	KTS-R10	JKS-10	JJS-10	FNQ-R-10	KTK-R-10	LP-CC-10
5 HP	KTS-R20	JKS-20	JJS-20	FNQ-R-20	KTK-R-20	LP-CC-20
7.5 HP	KTS-R25	JKS-25	JJS-25	FNQ-R-25	KTK-R-25	LP-CC-25
10 HP	KTS-R30	JKS-30	JJS-30	FNQ-R-30	KTK-R-30	LP-CC-30
15 HP	KTS-R40	JKS-40	JJS-40	-	-	-
20 HP	KTS-R50	JKS-50	JJS-50	-	-	-
25 HP	KTS-R60	JKS-60	JJS-60	-	-	-
30 HP	KTS-R80	JKS-80	JJS-80	-	-	-
40 HP	KTS-R100	JKS-100	JJS-100	-	-	-
50 HP	KTS-R125	JKS-150	JJS-150	-	-	-
60 HP	KTS-R150	JKS-150	JJS-150	-	-	-

AF-650 GP	SIBA	Littel fuse	Ferraz-Shawmut	Ferraz-Shawmut
HP	Type RK1	Type RK1	Type CC	Type RK1
1/2 to 1 HP	5017906-006	KLS-R6	ATM-R6	A6K-6R
2 to 3 HP	5017906-010	KLS-R10	ATM-R10	A6K-10R
5 HP	5017906-020	KLS-R20	ATM-R20	A6K-20R
7.5 HP	5017906-025	KLS-R25	ATM-R25	A6K-25R
10 HP	5012406-032	KLS-R30	ATM-R30	A6K-30R
15 HP	5014006-040	KLS-R40	-	A6K-40R
20 HP	5014006-050	KLS-R50	-	A6K-50R
25 HP	5014006-063	KLS-R60	-	A6K-60R
30 HP	2028220-100	KLS-R80	-	A6K-80R
40 HP	2028220-125	KLS-R100	-	A6K-100R
50 HP	2028220-125	KLS-R125	-	A6K-125R
60 HP	2028220-160	KLS-R150	-	A6K-150R

AF-650 GP	Bussmann	Bussmann	Bussmann	Bussmann
HP	JFHR2	Type H	Type T	JFHR2
75 HP	FWH-200	-	-	-
100 HP	FWH-250	-	-	-

AF-650 GP	SIBA	Littel fuse	Ferraz-Shawmut	Ferraz-Shawmut
HP	Type RK1	JFHR2	JFHR2	JFHR2
75 HP	2028220-200	L50S-225	-	A50-P225
100 HP	2028220-250	L50S-250		A50-P250

Ferraz-Shawmut A50QS fuses may be substituted for A50P fuses.

170M fuses shown from Bussmann use the -/80 visual indicator. –TN/80 Type T, -/110 or TN/110 Type T indicator fuses of the same size and amperage may be substituted.

550 - 600V

AF-650 GP	Bussmann	Bussmann	Bussmann	Bussmann	Bussmann	Bussmann
HP	Type RK1	Type J	Type T	Type CC	Type CC	Type CC
1 to 2 HP	KTS-R-5	JKS-5	JJS-6	FNQ-R-5	KTK-R-5	LP-CC-5
3 to 5 HP	KTS-R10	JKS-10	JJS-10	FNQ-R-10	KTK-R-10	LP-CC-10
7.5 to 10 HP	KTS-R20	JKS-20	JJS-20	FNQ-R-20	KTK-R-20	LP-CC-20

AF-650 GP	SIBA	Littel fuse	Ferraz-Shawmut
HP	Type RK1	Type RK1	Type RK1
1 to 2 HP	5017906-005	KLSR005	A6K-5R
3 to 5 HP	5017906-010	KLSR010	A6K-10R
7.5 to 10 HP	5017906-020	KLSR020	A6K-20R

AF-650 GP	Bussmann	SIBA	Ferraz-Shawmut
HP	JFHR2	Type RK1	Type RK1
50 HP	170M3013	2061032.125	6.6URD30D08A0125
60 HP	170M3014	2061032.160	6.6URD30D08A0160
75 HP	170M3015	2061032.200	6.6URD30D08A0200
100 HP	170M3015	2061032.200	6.6URD30D08A0200

170M fuses shown from Bussmann use the -/80 visual indicator. –TN/80 Type T, -/110 or TN/110 Type T indicator fuses of the same size and amperage may be substituted.

3.3.5 Access to Control Terminals

All terminals to the control cables are located underneath the terminal cover on the front the IP20 Open Chassis and IP20 with Nema 1 field installed kits.. Remove the terminal cover with a screwdriver.

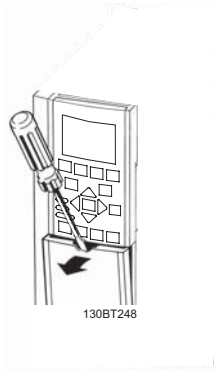

Illustration 3.19: Access to control terminals for unit sizes 12, 13, 23, 24, 33, and 34

Remove front-cover of Nema 12 and Nema 4 drive types to access control terminals. When replacing the front-cover, please ensure proper fastening by applying a torque of 2 Nm.

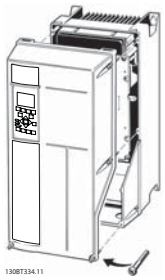

Illustration 3.20: Access to control terminals for unit sizes 15, 21, 22, 31, and 32

3.3.6 Electrical Installation, Control Terminals

To mount the cable to the terminal:

1. Strip insulation of 9-10 mm
2. Insert a screwdriver[1)] in the square hole.
3. Insert the cable in the adjacent circular hole.
4. Remove the screw driver. The cable is now mounted to the terminal.

To remove the cable from the terminal:

1. Insert a screwdriver[1)] in the square hole.
2. Pull out the cable.

[1)] Max. 0.4 x 2.5 mm

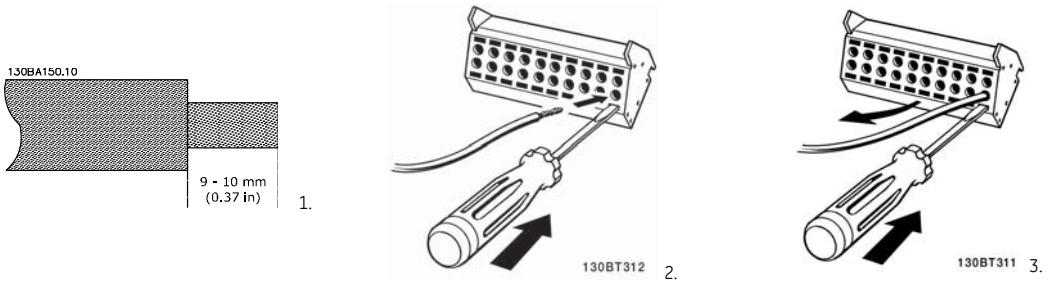

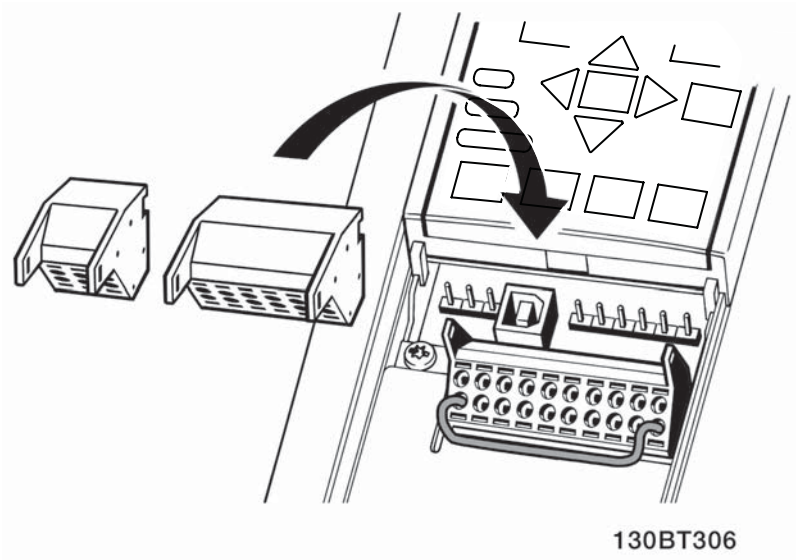

3.4 Connection Examples

3.4.1 Start/Stop

Terminal 18 = par. E-01 Terminal *18 Digital Input* [8] *Start*

Terminal 27 = par. E-03 Terminal *27 Digital Input* [0] *No operation* (Default *coast inverse*)

Terminal 37 = Safe stop

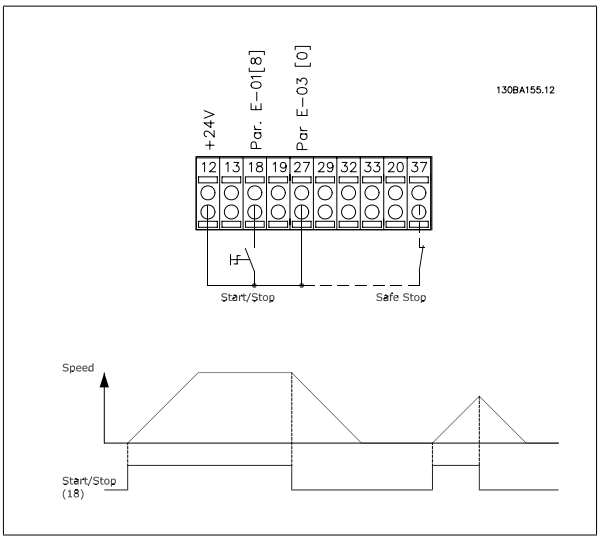

3.4.2 Pulse Start/Stop

Terminal 18 = par. E-01 Terminal *18 Digital Input*Latched start, [9]

Terminal 27= par. E-03 Terminal *27 Digital Input*Stop inverse, [6]

Terminal 37 = Safe stop

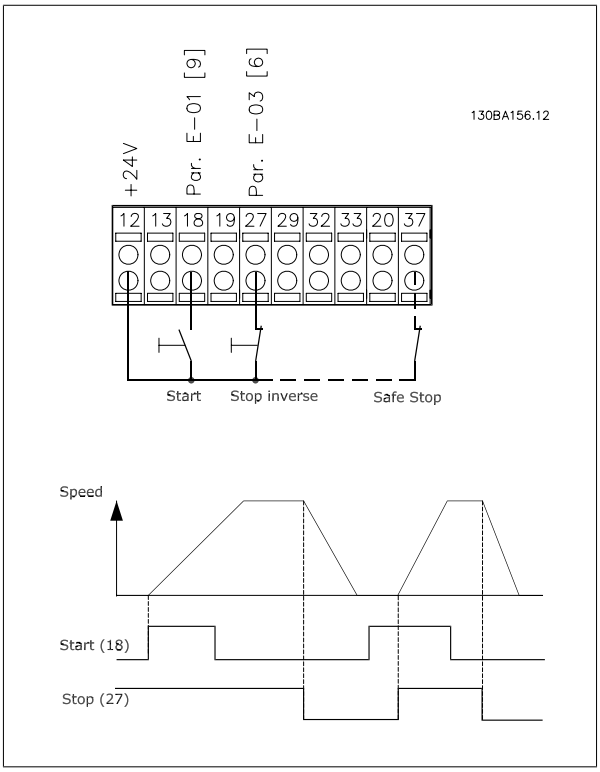

3.4.3 Speed Up/Down

Terminals 29/32 = Speed up/down:.

Terminal 18 = par. E-01 Terminal *18 Digital Input* Start [9] (default)

Terminal 27 = par. E-03 Terminal *27 Digital Input* Freeze reference [19]

Terminal 29 = par. E-04 Terminal *29 Digital Input* Speed up [21]

Terminal 32 = par. E-05 Terminal *32 Digital Input* Speed down [22]

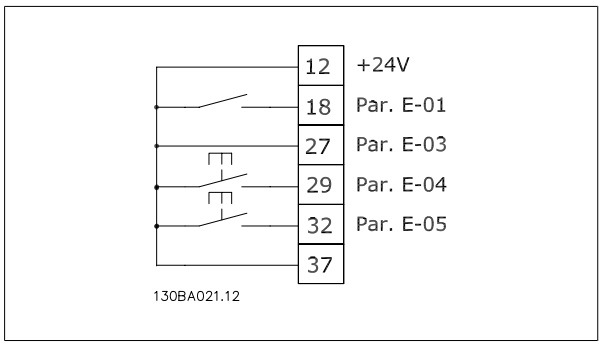

3.4.4 Potentiometer Reference

Voltage reference via a potentiometer:

Reference Source 1 = [1] *Analog input 53* (default)

Terminal 53, Low Voltage = 0 Volt

Terminal 53, High Voltage = 10 Volt

Terminal 53, Low Ref./Feedback = 0 RPM

Terminal 53, High Ref./Feedback = 1500 RPM

Switch S201 = OFF (U)

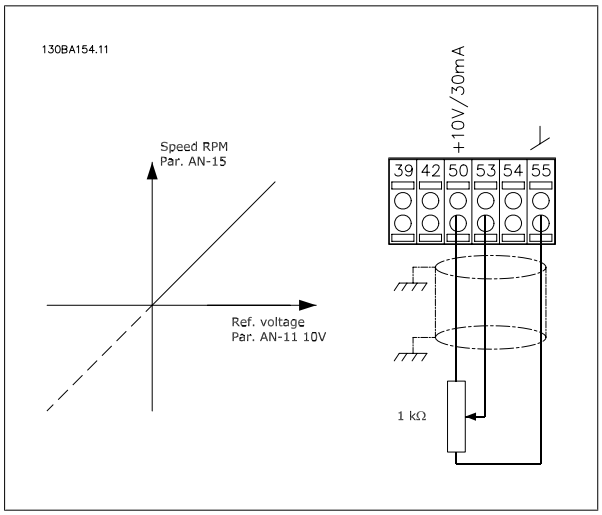

3.5.1 Electrical Installation, Control Cables

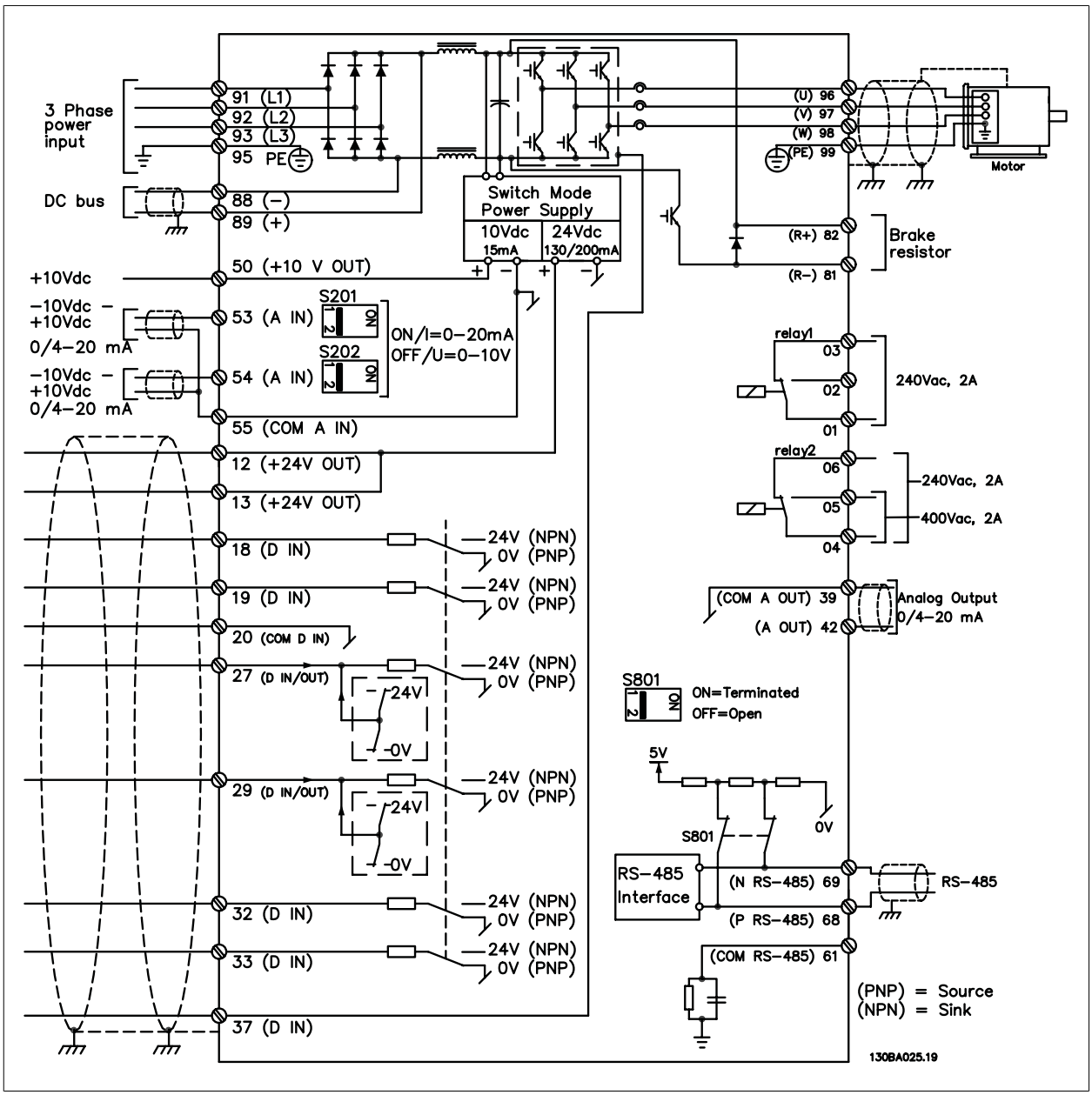

Illustration 3.21: Diagram showing all electrical terminals without options.

Terminal 37 is the input to be used for Safe Stop. For instructions on Safe Stop installation please refer to the section *Safe Stop Installation* of the AF-650 GP Design Guide.

Very long control cables and analogue signals may in rare cases and depending on installation result in 50/60 Hz earth loops due to noise from mains supply cables.

If this occurs, it may be necessary to break the screen or insert a 100 nF capacitor between screen and chassis.

The digital and analogue inputs and outputs must be connected separately to the common inputs (terminal 20, 55, 39) of the frequency converter to avoid ground currents from both groups to affect other groups. For example, switching on the digital input may disturb the analog input signal.

Input polarity of control terminals

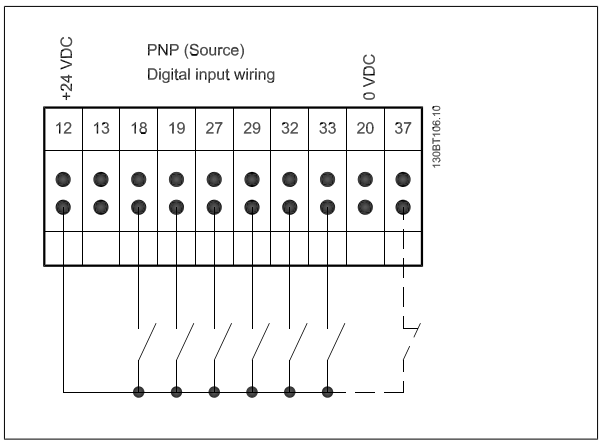

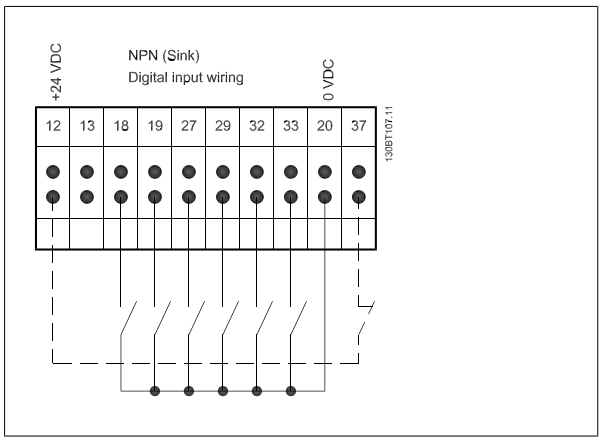

NB!
Control cables must be screened/armoured.

See section entitled *Earthing of Screened/Armoured Control Cables* for the correct termination of control cables.

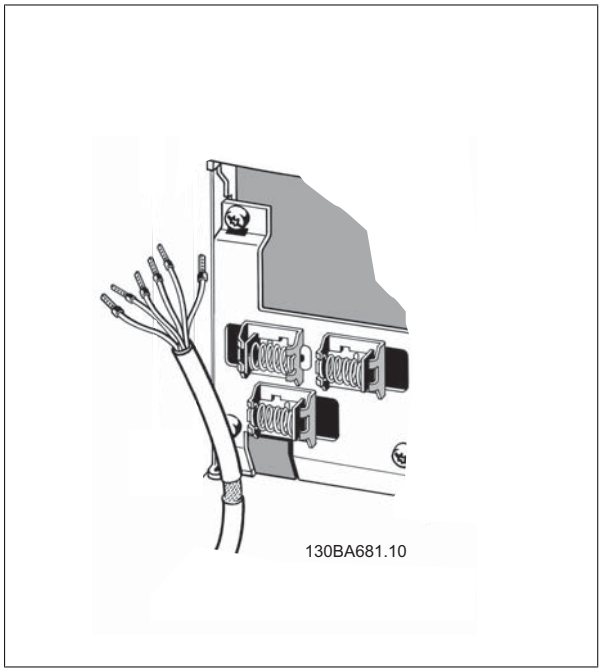

3.5.2 Switches S201, S202, and S801

Switches S201 (A53) and S202 (A54) are used to select a current (0-20 mA) or a voltage (-10 to 10 V) configuration of the analog input terminals 53 and 54 respectively.

Switch S801 (BUS TER.) can be used to enable termination on the RS-485 port (terminals 68 and 69).

See drawing *Diagram showing all electrical terminals* in section *Electrical Installation.*

Default setting:

S201 (A53) = OFF (voltage input)

S202 (A54) = OFF (voltage input)

S801 (Bus termination) = OFF

When changing the function of S201, S202 or S801 be careful not to use force for the switch over. It is recommended to remove the Keypad fixture (cradle) when operating the switches. The switches must not be operated with power on the frequency converter.

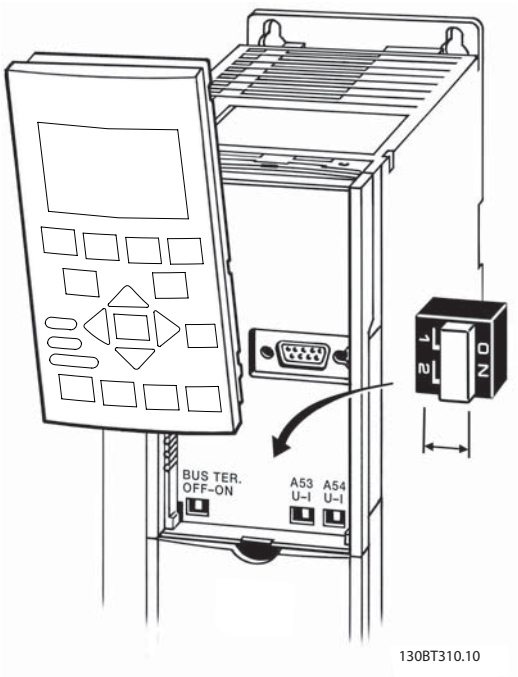

3.6.1 Final Set-Up and Test

To test the set-up and ensure that the frequency converter is running, follow these steps.

Step 1. Locate the motor name plate

NB!
The motor is either star- (Y) or delta- connected (Δ). This information is located on the motor name plate data.

3

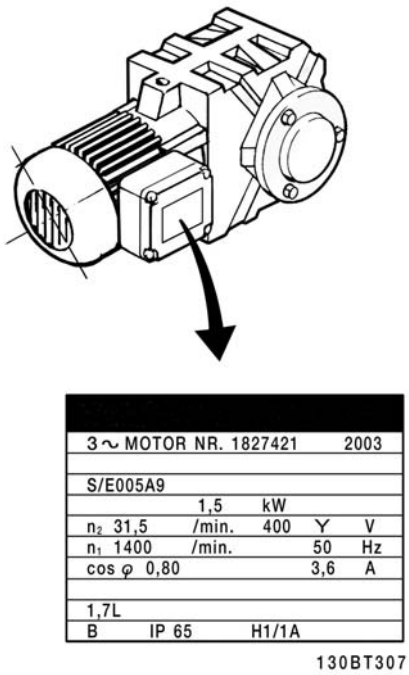

Step 2. Enter the motor name plate data in this parameter list.
To access this list first press the [QUICK MENU] key then select "Quick Setup". Use the up and down arrow keys to navigate to the parameters associated with the motor nameplate values.

1.	par. P-07 *Motor Power [kW]* par. P-02 *Motor Power [HP]*
2.	par. F-05 Motor *Rated Voltage*
3.	par. F-04 *Base Frequency*
4.	par. P-03 Motor *Current*
5.	par. P-06 Base *Speed*

Step 3. Activate the Auto Tune

Performing an Auto Tune will ensure optimum performance. The Auto Tune measures the values from the motor model equivalent diagram.

1. Connect terminal 37 to terminal 12 (if terminal 37 is available).
2. Connect terminal 27 to terminal 12 or set par. E-03 Terminal *27 Digital Input* to 'No function'.
3. Activate the Auto Tune par. P-04 *Auto Tune*.
4. Choose between complete or reduced Auto Tune. If a Sine-wave filter is connected, run only the reduced Auto Tune, or remove the Sine-wave filter and run complete Auto Tune..
5. Press the [OK] key. The display shows "Press [Hand] to start".
6. Press the [Hand] key. A progress bar indicates if the Auto Tune is in progress.

Stop the Auto Tune during operation

1. Press the [OFF] key - the frequency converter enters into alarm mode and the display shows that the Auto Tune was terminated by the user.

Successful Auto Tune

1. The display shows "Press [OK] to finish Auto Tune".
2. Press the [OK] key to exit the Auto Tune state.

Unsuccessful Auto Tune

1. The frequency converter enters into alarm mode. A description of the alarm can be found in the *Warnings and Alarms* chapter.
2. "Report Value" in the [Alarm Log] shows the last measuring sequence carried out by the Auto Tune, before the frequency converter entered alarm mode. This number along with the description of the alarm will assist you in troubleshooting. If you contact GE for service, make sure to mention number and alarm description.

NB!
Unsuccessful Auto Tune is often caused by incorrectly entering motor name plate data or a too big difference between the motor power size and the frequency converter power size.

Step 4. Set speed limit and accel/decel times

par. F-52 Minimum *Reference*
par. F-53 Maximum *Reference*

Table 3.3: Set up the desired limits for speed and ramp time.

par. F-18 *Motor Speed Low Limit [RPM]* or par. F-16 *Motor Speed Low Limit [Hz]*
par. F-17 *Motor Speed High Limit [RPM]* or par. F-15 Motor *Speed High Limit [Hz]*

par. F-07 *Accel Time 1*
par. F-08 *Decel Time 1*

3.7 Additional Connections

3.7.1 Mechanical Brake Control

In hoisting/lowering applications, it is necessary to be able to control an electro-mechanical brake:

- Control the brake using any relay output or digital output (terminal 27 or 29).
- Keep the output closed (voltage-free) as long as the frequency converter is unable to 'support' the motor, for example due to the load being too heavy.
- Select *Mechanical brake control* [32] in E-2# for applications with an electro-mechanical brake.
- The brake is released when the motor current exceeds the preset value in par. B-20 Release *Brake Current*.
- The brake is engaged when the output frequency is less than the frequency set in par. B-21 Activate *Brake Speed [RPM]*or par. B-22 Activate *Brake Speed [Hz]*, and only if the frequency converter carries out a stop command.

If the frequency converter is in alarm mode or in an over-voltage situation, the mechanical brake immediately cuts in.

3.7.2 Parallel Connection of Motors

The frequency converter can control several parallel-connected motors. The total current consumption of the motors must not exceed the rated output current $I_{M,N}$ for the frequency converter.

NB!
Installations with cables connected in a common joint as in the illustration below, is only recommended for short cable lengths.

NB!
When motors are connected in parallel, par. P-04 *Auto Tune* cannot be used.

NB!
The electronic thermal overload of the frequency converter cannot be used as motor protection for the individual motor in systems with parallel-connected motors. Provide further motor protection by e.g. thermistors in each motor or individual thermal relays (circuit breakers are not suitable as protection).

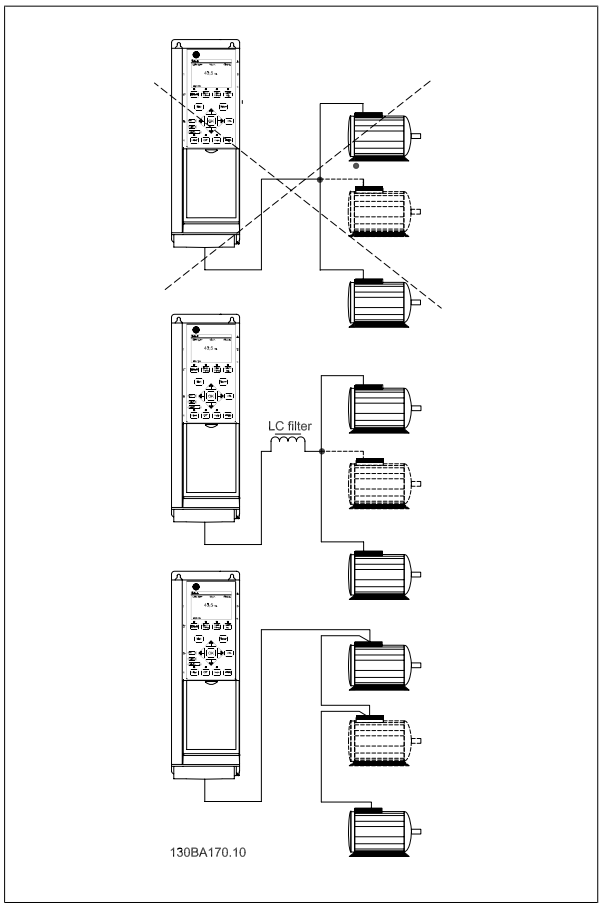

Problems may arise at start and at low RPM values if motor sizes are widely different because small motors' relatively high ohmic resistance in the stator calls for a higher voltage at start and at low RPM values.

3.7.3 Motor Thermal Protection

The electronic thermal overload in the frequency converter has received UL-approval for single motor protection, when par. F-10 *Electronic Overload*is set for *Elec. OL Trip* and par. P-03 Motor *Current* is set to the rated motor current (see motor name plate).

3.7.4 How to Connect a PC to the frequency converter

To control the frequency converter from a PC, install the DCT-10 Drive Control Tool Software.
The PC is connected via a standard (host/device) USB cable, or via the RS485 interface as shown in the section *Bus Connection* in the Programming Guide.

NB!
The USB connection is galvanically isolated from the supply voltage (PELV) and other high-voltage terminals. The USB connection is connected to protection earth on the frequency converter. Use only isolated laptop as PC connection to the USB connector on the frequency converter.

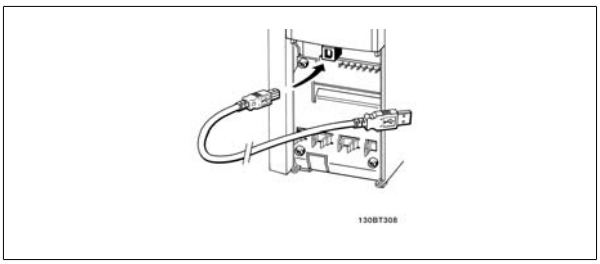

Illustration 3.22: USB connection.

3.7.5 The DCT-10 Drive Control Tool Software

Data storage in PC via DCT-10 Drive Control Tool Software:

1. Connect a PC to the unit via USB com port
2. Open DCT-10 Drive Control Tool Software
3. Select in the "network" section the USB port
4. Choose "Copy"
5. Select the "project" section
6. Choose "Paste"
7. Choose "Save as"

All parameters are now stored.

Data transfer from PC to drive via DCT-10 Drive Control Tool Software:

1. Connect a PC to the unit via USB com port
2. Open DCT-10 Drive Control Tool Software
3. Choose "Open"– stored files will be shown
4. Open the appropriate file
5. Choose "Write to drive"

All parameters are now transferred to the drive.

A separate manual for DCT-10 Drive Control Tool Software as part of the software.

4 How to Program

4.1 The Graphical Keypad

The easiest programming of the frequency converter is performed by the Graphical Keypad.

4.1.1 How to Program on the Graphical Keypad

The following instructions are valid for the graphical Keypad:

The keypad is divided into four functional groups:

1. Graphical display with Status lines.
2. Menu keys and indicator lights - changing parameters and switching between display functions.
3. Navigation keys and indicator lights (LEDs).
4. Operation keys and indicator lights (LEDs).

All data is displayed in the display, which can show up to five items of operating data while displaying [Status].

Display lines:

a. **Status line:** Status messages displaying icons and graphic.

b. **Line 1-2:** Operator data lines displaying data defined or chosen by the user. By pressing the [Status] key, up to one extra line can be added.

c. **Status line:** Status messages displaying text.

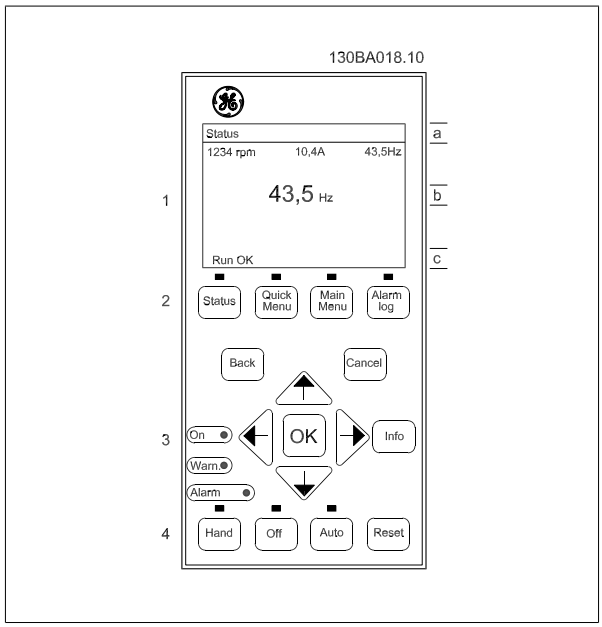

4.1.2 Initial Commissioning

The easiest way of carrying out the initial commissioning is by using the Quick Menu button and follow the quick set-up procedure using Keypad (read table from left to right). The example applies to open loop applications:

Press

Quick Menu	↓	Q2 Quick Set-Up	OK	↓
par. K-01 *Language*	OK	Set language	↓	
par. K-02 Motor *Speed Unit*	OK	Set motor speed in Hz or RPM	↓	
par. P-02 *Motor Power [HP]* or par. P-07 *Motor Power [kW]*	OK	Set Motor nameplate power	↓	
par. F-05 Motor *Rated Voltage*	OK	Set Nameplate voltage	↓	
par. F-04 *Base Frequency*	OK	Set Nameplate frequency	↓	
par. P-03 Motor *Current*	OK	Set Nameplate current	↓	
par. P-06 Base *Speed*	OK	Set Nameplate speed in RPM	↓	
par. F-01 *Frequency Setting 1*	OK	Set reference source	↓	
par. F-02 Operation *Method*	OK	Select which reference site to activate	↓	
par. F-07 *Accel Time 1*	OK	Set the accel time with reference to synchronous motor speed, n_s	↓	
par. F-08 *Decel Time 1*	OK	Set the decel time time with reference to synchronous motor speed, n_s	↓	
par. F-10 *Electronic Overload*	OK	Set motor thermal protection	↓	
par. F-15 Motor *Speed High Limit [Hz]* or par. F-17 *Motor Speed High Limit [RPM]*	OK	Set motor speed high limit in Hz or RPM	↓	
par. F-16 *Motor Speed Low Limit [Hz]* or par. F-18 *Motor Speed Low Limit [RPM]*	OK	Set motor speed low limit in Hz or RPM	↓	
par. H-08 *Reverse Lock*	OK	Set allowed rotation direction	↓	
par. P-04 *Auto Tune*	OK	Set desired auto tune function. Enable complete auto tune is recommended	↓	

4.2 Quick Setup Parameter List

K-01 Language

Option:		Function:
		Defines the language to be used in the display. The frequency converter is delivered with 4 different languages.
[0] *	English	Part of Language packages 1 - 4

K-02 Motor Speed Unit

Option:		Function:
		This parameter cannot be adjusted while the motor is running. The display showing depends on settings in par. K-02 *Motor Speed Unit* and par. K-03 Regional *Settings*. The default setting of par. K-02 *Motor Speed Unit* and par. K-03 Regional *Settings* depends on which region of the world the frequency converter is supplied to, but can be re-programmed as required. **NB!** Changing the *Motor Speed Unit* will reset certain parameters to their initial value. It is recommended to select the motor speed unit first, before modifying other parameters.
[0]	RPM	Selects display of motor speed variables and parameters (i.e. references, feedbacks and limits) in terms of motor speed (RPM).
[1] *	Hz	Selects display of motor speed variables and parameters (i.e. references, feedbacks and limits) in terms of output frequency to the motor (Hz).

P-02 Motor Power [HP]

Range:		Function:
4.00 hp*	[0.09 - 3000.00 hp]	Enter the nominal motor power in HP according to the motor nameplate data. The default value corresponds to the nominal rated output of the unit. This parameter is visible in Keypad if par. K-03 Regional *Settings* is *US* [1]

P-07 Motor Power [kW]

Range:		Function:
4.00 kW*	[0.09 - 3000.00 kW]	Enter the nominal motor power in kW according to the motor nameplate data. The default value corresponds to the nominal rated output of the unit. This parameter cannot be adjusted while the motor is running. This parameter is visible in Keypad if par. K-03 Regional *Settings* is *International* [0].

F-05 Motor Rated Voltage

Range:		Function:
400. V*	[10. - 1000. V]	Enter the nominal motor voltage according to the motor nameplate data. The default value corresponds to the nominal rated output of the unit. This parameter cannot be adjusted while the motor is running.

F-04 Base Frequency

Range:		Function:
50. Hz*	[20 - 1000 Hz]	Min - Max motor frequency: 20 - 1000 Hz. Select the motor frequency value from the motor nameplate data. If a value different from 50 Hz or 60 Hz is selected, it is necessary to adapt the load independent settings in par. H-50 Motor *Magnetisation at Zero Speed* to par. H-53 Model *Shift Frequency*. For 87 Hz operation with 230/400 V motors, set the nameplate data for 230 V/50 Hz. Adapt par. F-17 *Motor Speed High Limit [RPM]* and par. F-53 Maximum *Reference* to the 87 Hz application.

P-03 Motor Current

Range:		Function:
7.20 A*	[0.10 - 10000.00 A]	Enter the nominal motor current value from the motor nameplate data. This data is used for calculating motor torque, motor thermal protection etc.

NB!
This parameter cannot be adjusted while the motor is running.

P-06 Base Speed

Range:		Function:
1420. RPM*	[100 - 60000 RPM]	Enter the nominal motor speed value from the motor nameplate data. This data is used for calculating automatic motor compensations.

NB!
This parameter cannot be changed while the motor is running.

F-01 Frequency Setting 1

Option:		Function:
		Select the reference input to be used for the first reference signal. par. F-01 *Frequency Setting 1*, par. C-30 Frequency *Command 2* and par. C-34 Frequency *Command 3* define up to three different reference signals. The sum of these reference signals defines the actual reference.
[0]	No function	
[1] *	Analog Input 53	
[2]	Analog Input 54	
[7]	Frequency input 29	
[8]	Frequency input 33	
[11]	Local bus reference	
[20]	Digital Potentiometer	
[21]	Analog input X30-11	(OPCGPIO - General Purpose I/O Option Module)
[22]	Analog input X30-12	(OPCGPIO - General Purpose I/O Option Module)

F-02 Operation Method

Option:		Function:
		Select which reference site to activate.
[0] *	Linked to Hand / Auto	Use local reference when in Hand mode; or remote reference when in Auto mode.
[1]	Remote	Use remote reference in both Hand mode and Auto mode.
[2]	Local	Use local reference in both Hand mode and Auto mode. **NB!** When set to Local [2], the frequency converter will start with this setting again following a 'power down'.

F-07 Accel Time 1

Range:		Function:
3.00 s*	[0.01 - 3600.00 s]	Enter the accel time, i.e. the acceleration time from 0 RPM to the synchronous motor speed n_S. Choose a accel time such that the output current does not exceed the current limit in par. F-43 Current *Limit* during ramping. The value 0.00 corresponds to 0.01 sec. in speed mode. See decel time in par. F-08 *Decel Time 1*.

$$Par.\ F-07 = \frac{t_{acc}[s] \times n_s[RPM]}{ref[RPM]}$$

F-08 Decel Time 1

Range:		Function:
3.00 s*	[0.01 - 3600.00 s]	Enter the decel time, i.e. the deceleration time from the synchronous motor speed n_s to 0 RPM. Choose a decel time such that no over-voltage arises in the inverter due to regenerative operation of the motor, and such that the generated current does not exceed the current limit set in par. F-43 Current *Limit*. The value 0.00 corresponds to 0.01 s in speed mode. See accel time in par. F-07 *Accel Time 1*. $Par.\ F-08 = \frac{t_{dec}[s] \times n_s[RPM]}{ref[RPM]}$

F-10 Electronic Overload

Option:		Function:
		The frequency converter determines the motor temperature for motor protection in two different ways: • Via a thermistor sensor connected to one of the analog or digital inputs (par. F-12 Motor *Thermistor Input*). • Via calculation of the thermal load, based on the actual load and time. The calculated thermal load is compared with the rated motor current $I_{M,N}$ and the rated motor frequency $f_{M,N}$. The calculations estimate the need for a lower load at lower speed due to less cooling from the fan incorporated in the motor.
[0] *	No protection	Continuously overloaded motor, when no warning or trip of the frequency converter is required.
[1]	Thermistor warning	Activates a warning when the connected thermistor or KTY-sensor in the motor reacts in the event of motor over-temperature.
[2]	Thermistor trip	Stops (trips) frequency converter when connected thermistor in motor reacts in the event of motor over-temperature. The thermistor cut-out value must be > 3 kΩ. Integrate a thermistor (PTC sensor) in the motor for winding protection.
[3]	Electronic Overload Warning 1	
[4]	Electronic Overload Trip 1	
[5]	Electronic Overload Warning 2	
[6]	Electronic Overload Trip 2	
[7]	Electronic Overload Warning 3	
[8]	Electronic Overload Trip 3	
[9]	Electronic Overload Warning 4	
[10]	Electronic Overload Trip 4	

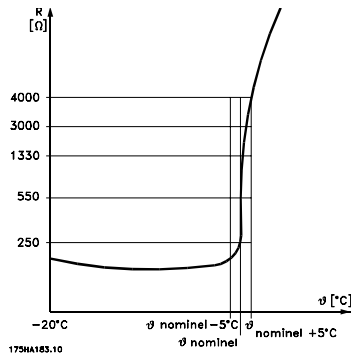

Motor protection can be implemented using a range of techniques: PTC or KTY sensor (see also section *KTY Sensor Connection*) in motor windings; mechanical thermal switch (Klixon type); or Electronic Thermal Overload.

Using a digital input and 24 V as power supply:
Example: The frequency converter trips when the motor temperature is too high
Parameter set-up:
Set par. F-10 *Electronic Overload* to *Thermistor Trip* [2]
Set par. F-12 Motor *Thermistor Input* to *Digital Input* [6]

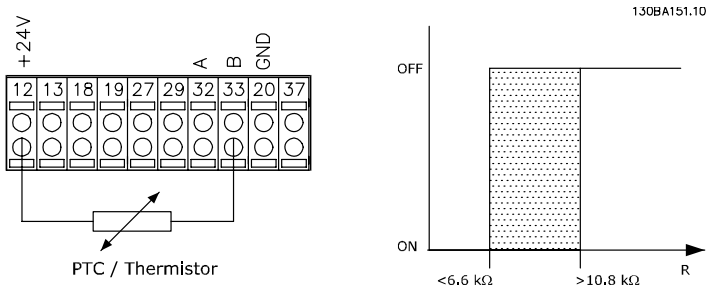

Using a digital input and 10 V as power supply:
Example: The frequency converter trips when the motor temperature is too high.
Parameter set-up:
Set par. F-10 *Electronic Overload* to *Thermistor Trip* [2]
Set par. F-12 Motor *Thermistor Input* to *Digital Input* [6]

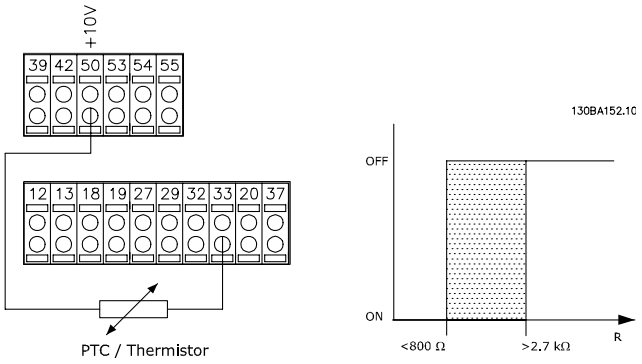

Using an analog input and 10 V as power supply:

Example: The frequency converter trips when the motor temperature is too high.

Parameter set-up:

Set par. F-10 *Electronic Overload* to *Thermistor Trip* [2]

Set par. F-12 Motor *Thermistor Input* to *Analog Input 54* [2]

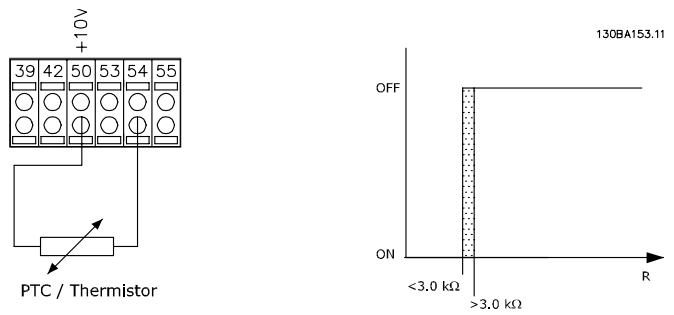

Input Digital/analog	Supply Voltage Volt	Threshold Cut-out Values
Digital	24 V	< 6.6 kΩ - > 10.8 kΩ
Digital	10 V	< 800Ω - > 2.7 kΩ
Analog	10 V	< 3.0 kΩ - > 3.0 kΩ

NB!

Check that the chosen supply voltage follows the specification of the used thermistor element.

Select *Electronic Overload Warning 1-4*, to activate a warning on the display when the motor is overloaded.

Select *Electronic Overload Trip 1-4* to trip the frequency converter when the motor is overloaded.

Programme a warning signal via one of the digital outputs. The signal appears in the event of a warning and if the frequency converter trips (thermal warning).

Electronic Overload functions 1-4 will calculate the load when the set-up where they were selected is active. For example Electronic Overload 3 starts calculating when setup 3 is selected. For the North American market: The Electronic Overload functions provide class 20 motor overload protection in accordance with NEC.

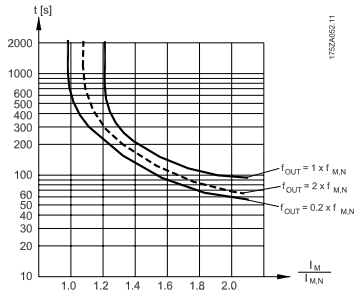

F-15 Motor Speed High Limit (Hz)

Range:	Function:
50/60.0 Hz* [par. H-12 - par. H-19 Hz]	Enter the maximum limit for motor speed. The Motor Speed High Limit can be set to correspond to the manufacturer's recommended maximum of the motor shaft. The Motor Speed High Limit must exceed the in par. F-16 Frequency *Limiter (Low)*. Only par. F-18 Speed *Limiter (Low)* or par. F-16 Frequency *Limiter (Low)* will be displayed depending on other parameters in the Main Menu and depending on default settings dependant on global location.

NB!

Max. output frequency cannot exceed 10% of the inverter frequency (par. F-26 Motor *Noise (Carrier Freq)*).

F-16 Motor Speed Low Limit [Hz]

Range:		Function:
0 Hz*	[0.0 - par. H-14 Hz]	Enter the minimum limit for motor speed. The Motor Speed Low Limit can be set to correspond to the minimum output frequency of the motor shaft. The Motor Speed Low Limit must not exceed the setting in par. F-15 *Motor Speed High Limit (Hz).*

F-17 Motor Speed High Limit [RPM]

Range:		Function:
3600. RPM*	[par. H-11 - 60000. RPM]	Enter the maximum limit for motor speed. The Motor Speed High Limit can be set to correspond to the manufacturer's maximum rated motor speed. The Motor Speed High Limit must exceed the setting in par. F-18 *Motor Speed Low Limit [RPM].*

NB!
Max. output frequency cannot exceed 10% of the inverter switching frequency (par. F-26 Motor *Noise (Carrier Freq)*).

F-18 Motor Speed Low Limit [RPM]

Range:		Function:
0 RPM*	[0 - par. H-13 RPM]	Enter the minimum limit for motor speed. The Motor Speed Low Limit can be set to correspond to the manufacturer's recommended minimum motor speed. The Motor Speed Low Limit must not exceed the setting in par. F-17 *Motor Speed High Limit [RPM].*

H-08 Reverse Lock

Option:		Function:
		Select the motor speed direction(s) required. Use this parameter to prevent unwanted reversing. When par. H-40 Configuration *Mode* is set to *Process* [3], par. H-08 *Reverse Lock* is set to *Clockwise* [0] as default. The setting in par. H-08 *Reverse Lock* does not limit options for setting par. F-15 *Motor Speed High Limit (Hz)* or par. F-17 *Motor Speed High Limit [RPM].* This parameter cannot be adjusted while the motor is running.
[0] *	Clockwise	
[1]	Counter clockwise	
[2]	Both directions	

P-04 Auto Tune

Option:		Function:
		The Auto Tune function optimises dynamic motor performance by automatically optimising the advanced motor parameters (par. P-30 Stator *Resistance (Rs)* to par. P-35 Main *Reactance (Xh)*) at motor standstill. Activate the Auto Tune function by pressing [Hand] after selecting [1] or [2]. See also the section *Auto Tuning* in the AF-650 GP Design Guide. After a normal sequence, the display will read: "Press [OK] to finish Auto Tune". After pressing the [OK] key the frequency converter is ready for operation. This parameter cannot be adjusted while the motor is running.
[0] *	Off	
[1]	Enable complete Auto Tune	
[2]	Enable reduced Auto Tune	

Note:

- For the best results run Auto Tune on a cold motor.
- Auto Tune cannot be performed while the motor is running.
- Auto Tune cannot be performed on permanent magnet motors.

NB!
It is important to set motor par. F-04, F-05, and P-02 to P-08 correctly, since these form part of the Auto Tune algorithm. An Auto Tune should be performed to achieve optimum dynamic motor performance. It may take up to 10 min, depending on the power rating of the motor.

NB!
Avoid generating external torque during Auto Tune.

NB!
If one of the settings in par. F-04, F-05, or P-02 to P-08 is changed, par. P-30 Stator *Resistance (Rs)* to par. P-01 Motor *Poles*, the advanced motor parameters, will return to default setting.

NB!
Auto Tune will work problem-free on 1 motor size down, typically work on 2 motor sizes down, rarely work on 3 sizes down and never work on 4 sizes down. Please keep in mind that the accuracy of the measured motor data will be poorer when you operate on motors smaller than nominal drive size.

4.3 Parameter Lists

4.3.1 K-## Keypad Set-up

Par. No. #	Parameter description	Default value	4-set-up	Change during operation	Conversion index	Type
K-0#						
K-01	Language	[0] English	1 set-up	TRUE	-	Uint8
K-02	Motor Speed Unit	[0] RPM	2 set-ups	FALSE	-	Uint8
K-03	Regional Settings	[1] US	2 set-ups	FALSE	-	Uint8
K-04	Operating State at Power-up	[1] Forced stop, ref=old	All set-ups	TRUE	-	Uint8
K-1#						
K-10	Active Set-up	[1] Set-up 1	1 set-up	TRUE	-	Uint8
K-11	Edit Set-up	[1] Set-up 1	All set-ups	TRUE	-	Uint8
K-12	This Set-up Linked to	[0] Not linked	All set-ups	FALSE	-	Uint8
K-13	Readout: Linked Set-ups	0 N/A	All set-ups	FALSE	0	Uint16
K-14	Readout: Edit Set-ups / Channel	0 N/A	All set-ups	TRUE	0	Int32
K-2#						
K-20	Display Line 1.1 Small	ExpressionLimit	All set-ups	TRUE	-	Uint16
K-21	Display Line 1.2 Small	ExpressionLimit	All set-ups	TRUE	-	Uint16
K-22	Display Line 1.3 Small	ExpressionLimit	All set-ups	TRUE	-	Uint16
K-23	Display Line 2 Large	ExpressionLimit	All set-ups	TRUE	-	Uint16
K-24	Display Line 3 Large	ExpressionLimit	All set-ups	TRUE	-	Uint16
K-25	Quick Start	ExpressionLimit	1 set-up	TRUE	0	Uint16
K-3#						
K-30	Unit for Custom Readout	[0] None	All set-ups	TRUE	-	Uint8
K-31	Min Value of Custom Readout	0.00 CustomReadoutUnit	All set-ups	TRUE	-2	Int32
K-32	Max Value of Custom Readout	100.00 CustomReadoutUnit	All set-ups	TRUE	-2	Int32
K-4#						
K-40	[Hand] Button on Keypad	[1] Enabled	All set-ups	TRUE	-	Uint8
K-41	[Off] Button on Keypad	[1] Enabled	All set-ups	TRUE	-	Uint8
K-42	[Auto] Button on Keypad	[1] Enabled	All set-ups	TRUE	-	Uint8
K-43	[Reset] Button on Keypad	[1] Enabled	All set-ups	TRUE	-	Uint8
K-5#						
K-50	Keypad Copy	[0] No copy	All set-ups	FALSE	-	Uint8
K-51	Set-up Copy	[0] No copy	All set-ups	FALSE	-	Uint8
K-6#						
K-60	Main Menu Password	100 N/A	1 set-up	TRUE	0	Int16
K-61	Access to Main Menu w/o Password	[0] Full access	1 set-up	TRUE	-	Uint8
K-65	Quick Menu Password	200 N/A	1 set-up	TRUE	0	Int16
K-66	Access to Quick Menu w/o Password	[0] Full access	1 set-up	TRUE	-	Uint8
K-67	Bus Password Access	0 N/A	All set-ups	TRUE	0	Uint16

4.3.2 F-## Fundamental Parameters

Par. No. #	Parameter description	Default value	4-set-up	Change during operation	Conversion index	Type
F-0#						
F-01	Frequency Setting 1	null	All set-ups	TRUE	-	Uint8
F-02	Operation Method	[0] Linked to Hand / Auto	All set-ups	TRUE	-	Uint8
F-03	Max Output Frequency 1	132.0 Hz	All set-ups	FALSE	-1	Uint16
F-04	Base Frequency	ExpressionLimit	All set-ups	FALSE	0	Uint16
F-05	Motor Rated Voltage	ExpressionLimit	All set-ups	FALSE	0	Uint16
F-07	Accel Time 1	ExpressionLimit	All set-ups	TRUE	-2	Uint32
F-08	Decel Time 1	ExpressionLimit	All set-ups	TRUE	-2	Uint32
F-09	Torque Boost	100 %	All set-ups	TRUE	0	Int16
F-1#						
F-10	Electronic Overload	[0] No protection	All set-ups	TRUE	-	Uint8
F-11	Motor External Fan	[0] No	All set-ups	TRUE	-	Uint16
F-12	Motor Thermistor Input	[0] None	All set-ups	TRUE	-	Uint8
F-15	Motor Speed High Limit [Hz]	ExpressionLimit	All set-ups	TRUE	-1	Uint16
F-16	Motor Speed Low Limit [Hz]	ExpressionLimit	All set-ups	TRUE	-1	Uint16
F-17	Motor Speed High Limit [RPM]	ExpressionLimit	All set-ups	TRUE	67	Uint16
F-18	Motor Speed Low Limit [RPM]	ExpressionLimit	All set-ups	TRUE	67	Uint16
F-2#						
F-22	Start Speed [RPM]	ExpressionLimit	All set-ups	TRUE	67	Uint16
F-23	Start Speed [Hz]	ExpressionLimit	All set-ups	TRUE	-1	Uint16
F-24	Holding Time	0.0 s	All set-ups	TRUE	-1	Uint8
F-25	Start Function	[2] Coast/delay time	All set-ups	TRUE	-	Uint8
F-26	Motor Noise (Carrier Freq)	null	All set-ups	TRUE	-	Uint8
F-27	Motor Tone Random	[0] Off	All set-ups	TRUE	-	Uint8
F-29	Start Current	0.00 A	All set-ups	TRUE	-2	Uint32
F-3#						
F-37	Adv. Switching Pattern	[1] SFAVM	All set-ups	TRUE	-	Uint8
F-38	Overmodulation	[1] On	All set-ups	FALSE	-	Uint8
F-4#						
F-40	Torque Limiter (Driving)	ExpressionLimit	All set-ups	TRUE	-1	Uint16
F-41	Torque Limiter (Braking)	100.0 %	All set-ups	TRUE	-1	Uint16
F-43	Current Limit	ExpressionLimit	All set-ups	TRUE	-1	Uint32
F-5#						
F-50	Reference Range	null	All set-ups	TRUE	-	Uint8
F-51	Reference/Feedback Unit	null	All set-ups	TRUE	-	Uint8
F-52	Minimum Reference	0 ReferenceFeedbackUnit	All set-ups	TRUE	-3	Int32
F-53	Maximum Reference	ExpressionLimit	All set-ups	TRUE	-3	Int32
F-54	Reference Function	[0] Sum	All set-ups	TRUE	-	Uint8
F-6#						
F-62	Catch up/slow Down Value	0.00 %	All set-ups	TRUE	-2	Int16
F-64	Preset Relative Reference	0.00 %	All set-ups	TRUE	-2	Int32
F-68	Relative Scaling Reference Resource	[0] No function	All set-ups	TRUE	-	Uint8
F-9#						
F-90	Step Size	0.10 %	All set-ups	TRUE	-2	Uint16
F-91	Accel/Decel Time	1.00 s	All set-ups	TRUE	-2	Uint32
F-92	Power Restore	[0] Off	All set-ups	TRUE	-	Uint8
F-93	Maximum Limit	100 %	All set-ups	TRUE	0	Int16
F-94	Minimum Limit	-100 %	All set-ups	TRUE	0	Int16
F-95	Accel/Decel Ramp Delay	ExpressionLimit	All set-ups	TRUE	-3	TimD

4.3.3 E-## Digital In/Outs

Par. No. #	Parameter description	Default value	4-set-up	Change during operation	Conversion index	Type
E-0#						
E-00	Digital I/O Mode	[0] PNP	All set-ups	FALSE	-	Uint8
E-01	Terminal 18 Digital Input	null	All set-ups	TRUE	-	Uint8
E-02	Terminal 19 Digital Input	null	All set-ups	TRUE	-	Uint8
E-03	Terminal 27 Digital Input	null	All set-ups	TRUE	-	Uint8
E-04	Terminal 29 Digital Input	null	All set-ups	TRUE	-	Uint8
E-05	Terminal 32 Digital Input	[0] No operation	All set-ups	TRUE	-	Uint8
E-06	Terminal 33 Digital Input	[0] No operation	All set-ups	TRUE	-	Uint8
E-07	Terminal 37 Safe Stop	[1] Safe Stop Alarm	1 set-up	TRUE	-	Uint8
E-1#						
E-10	Accel Time 2	ExpressionLimit	All set-ups	TRUE	-2	Uint32
E-11	Decel Time 2	ExpressionLimit	All set-ups	TRUE	-2	Uint32
E-12	Accel Time 3	ExpressionLimit	All set-ups	TRUE	-2	Uint32
E-13	Decel Time 3	ExpressionLimit	All set-ups	TRUE	-2	Uint32
E-14	Accel Time 4	ExpressionLimit	All set-ups	TRUE	-2	Uint32
E-15	Decel Time 4	ExpressionLimit	All set-ups	TRUE	-2	Uint32
E-2#						
E-20	Terminal 27 Digital Output	null	All set-ups	TRUE	-	Uint8
E-21	Terminal 29 Digital Output	null	All set-ups	TRUE	-	Uint8
E-24	Function Relay	null	All set-ups	TRUE	-	Uint8
E-26	On Delay, Relay	0.01 s	All set-ups	TRUE	-2	Uint16
E-27	Off Delay, Relay	0.01 s	All set-ups	TRUE	-2	Uint16
E-3#						
E-30	Terminal X46/1 Digital Input	[0] No operation	All set-ups	TRUE	-	Uint8
E-31	Terminal X46/3 Digital Input	[0] No operation	All set-ups	TRUE	-	Uint8
E-32	Terminal X46/5 Digital Input	[0] No operation	All set-ups	TRUE	-	Uint8
E-33	Terminal X46/7 Digital Input	[0] No operation	All set-ups	TRUE	-	Uint8
E-34	Terminal X46/9 Digital Input	[0] No operation	All set-ups	TRUE	-	Uint8
E-35	Terminal X46/11 Digital Input	[0] No operation	All set-ups	TRUE	-	Uint8
E-36	Terminal X46/13 Digital Input	[0] No operation	All set-ups	TRUE	-	Uint8
E-5#						
E-51	Terminal 27 Mode	[0] Input	All set-ups	TRUE	-	Uint8
E-52	Terminal 29 Mode	[0] Input	All set-ups	TRUE	-	Uint8
E-53	Terminal X30/2 Digital Input	[0] No operation	All set-ups	TRUE	-	Uint8
E-54	Terminal X30/3 Digital Input	[0] No operation	All set-ups	TRUE	-	Uint8
E-55	Terminal X30/4 Digital Input	[0] No operation	All set-ups	TRUE	-	Uint8
E-56	Term X30/6 Digi Out (OPCGPIO)	null	All set-ups	TRUE	-	Uint8
E-57	Term X30/7 Digi Out (OPCGPIO)	null	All set-ups	TRUE	-	Uint8
E-6#						
E-60	Term. 29 Low Frequency	100 Hz	All set-ups	TRUE	0	Uint32
E-61	Term. 29 High Frequency	100 Hz	All set-ups	TRUE	0	Uint32
E-62	Term. 29 Low Ref./Feedb. Value	0.000 ReferenceFeedbackUnit	All set-ups	TRUE	-3	Int32
E-63	Term. 29 High Ref./Feedb. Value	ExpressionLimit	All set-ups	TRUE	-3	Int32
E-64	Pulse Filter Time Constant #29	100 ms	All set-ups	FALSE	-3	Uint16
E-65	Term. 33 Low Frequency	100 Hz	All set-ups	TRUE	0	Uint32
E-66	Term. 33 High Frequency	100 Hz	All set-ups	TRUE	0	Uint32
E-67	Term. 33 Low Ref./Feedb. Value	0.000 ReferenceFeedbackUnit	All set-ups	TRUE	-3	Int32
E-68	Term. 33 High Ref./Feedb. Value	ExpressionLimit	All set-ups	TRUE	-3	Int32
E-69	Pulse Filter Time Constant #33	100 ms	All set-ups	FALSE	-3	Uint16

Par. No. #	Parameter description	Default value	4-set-up	Change during operation	Conversion index	Type
E-7#						
E-70	Terminal 27 Pulse Output Variable	null	All set-ups	TRUE	-	Uint8
E-72	Pulse Output Max Freq #27	ExpressionLimit	All set-ups	TRUE	0	Uint32
E-73	Terminal 29 Pulse Output Variable	null	All set-ups	TRUE	-	Uint8
E-75	Pulse Output Max Freq #29	ExpressionLimit	All set-ups	TRUE	0	Uint32
E-76	Terminal X30/6 Pulse Output Variable	null	All set-ups	TRUE	-	Uint8
E-78	Pulse Output Max Freq #X30/6	ExpressionLimit	All set-ups	TRUE	0	Uint32
E-8#						
E-80	Term 32/33 Pulses Per Revolution	1024 N/A	All set-ups	FALSE	0	Uint16
E-81	Term 32/33 Encoder Direction	[0] Clockwise	All set-ups	FALSE	-	Uint8
E-9#						
E-90	Digital & Relay Bus Control	0 N/A	All set-ups	TRUE	0	Uint32
E-93	Pulse Out #27 Bus Control	0.00 %	All set-ups	TRUE	-2	N2
E-94	Pulse Out #27 Timeout Preset	0.00 %	1 set-up	TRUE	-2	Uint16
E-95	Pulse Out #29 Bus Control	0.00 %	All set-ups	TRUE	-2	N2
E-96	Pulse Out #29 Timeout Preset	0.00 %	1 set-up	TRUE	-2	Uint16

4.3.4 C-## Frequency Control Functions

Par. No. #	Parameter description	Default value	4-set-up	Change during operation	Conversion index	Type
C-0#						
C-01	Jump Frequency From [Hz]	ExpressionLimit	All set-ups	TRUE	-1	Uint16
C-02	Jump Speed From [RPM]	ExpressionLimit	All set-ups	TRUE	67	Uint16
C-03	Jump Speed To [RPM]	ExpressionLimit	All set-ups	TRUE	67	Uint16
C-04	Jump Frequency To [Hz]	ExpressionLimit	All set-ups	TRUE	-1	Uint16
C-05	Multi-step Frequency 1 - 8	0.00 %	All set-ups	TRUE	-2	Int16
C-2#						
C-20	Jog Speed [Hz]	ExpressionLimit	All set-ups	TRUE	-1	Uint16
C-21	Jog Speed [RPM]	ExpressionLimit	All set-ups	TRUE	67	Uint16
C-22	Jog Accel/Decel Time	ExpressionLimit	All set-ups	TRUE	-2	Uint32
C-23	Quick Stop Decel Time	ExpressionLimit	2 set-ups	TRUE	-2	Uint32
C-3#						
C-30	Frequency Command 2	null	All set-ups	TRUE	-	Uint8
C-34	Frequency Command 3	null	All set-ups	TRUE	-	Uint8

4.3.5 P-## Motor Data

Par. No. #	Parameter description	Default value	4-set-up	Change during operation	Conversion index	Type
P-0#						
P-01	Motor Poles	ExpressionLimit	All set-ups	FALSE	0	Uint8
P-02	Motor Power [HP]	ExpressionLimit	All set-ups	FALSE	-2	Uint32
P-03	Motor Current	ExpressionLimit	All set-ups	FALSE	-2	Uint32
P-04	Auto Tune	[0] Off	All set-ups	FALSE	-	Uint8
P-05	Motor Cont. Rated Torque	ExpressionLimit	All set-ups	FALSE	-1	Uint32
P-06	Base Speed	ExpressionLimit	All set-ups	FALSE	67	Uint16
P-07	Motor Power [kW]	ExpressionLimit	All set-ups	FALSE	1	Uint32
P-09	Slip Compensation	ExpressionLimit	All set-ups	TRUE	0	Int16
P-1#						
P-10	Slip Compensation Time Constant	ExpressionLimit	All set-ups	TRUE	-2	Uint16
P-2#						
P-20	Motor Construction	[0] Asynchron	All set-ups	FALSE	-	Uint8
P-3#						
P-30	Stator Resistance (Rs)	ExpressionLimit	All set-ups	FALSE	-4	Uint32
P-31	Rotor Resistance (Rr)	ExpressionLimit	All set-ups	FALSE	-4	Uint32
P-33	Stator Leakage Reactance (X1)	ExpressionLimit	All set-ups	FALSE	-4	Uint32
P-34	Rotor Leakage Reactance (X2)	ExpressionLimit	All set-ups	FALSE	-4	Uint32
P-35	Main Reactance (Xh)	ExpressionLimit	All set-ups	FALSE	-4	Uint32
P-36	Iron Loss Resistance (Rfe)	ExpressionLimit	All set-ups	FALSE	-3	Uint32
P-37	d-axis Inductance (Ld)	ExpressionLimit	All set-ups	FALSE	-6	Int32

4.3.6 H-## High Perf Parameters

Par. No. #	Parameter description	Default value	4-set-up	Change during operation	Conversion index	Type
H-0#						
H-03	Restore Factory Settings	[0] Normal operation	All set-ups	TRUE	-	Uint8
H-04	Auto-Reset (Times)	[0] Manual reset	All set-ups	TRUE	-	Uint8
H-05	Auto-Reset (Reset Interval)	10 s	All set-ups	TRUE	0	Uint16
H-07	Accel/Decel Time 1 Type	[0] Linear	All set-ups	TRUE	-	Uint8
H-08	Reverse Lock	null	All set-ups	FALSE	-	Uint8
H-09	Start Mode	[0] Disabled	All set-ups	FALSE	-	Uint8
H-2#						
H-20	Motor Feedback Loss Function	[2] Trip	All set-ups	TRUE	-	Uint8
H-21	Motor Feedback Speed Error	300 RPM	All set-ups	TRUE	67	Uint16
H-22	Motor Feedback Loss Timeout	0.05 s	All set-ups	TRUE	-2	Uint16
H-4#						
H-40	Configuration Mode	null	All set-ups	TRUE	-	Uint8
H-41	Motor Control Principle	null	All set-ups	FALSE	-	Uint8
H-42	Flux Motor Feedback Source	[1] 24V encoder	All set-ups	FALSE	-	Uint8
H-43	Torque Characteristics	[0] Constant torque	All set-ups	TRUE	-	Uint8
H-44	Constant or Variable Torque OL	[0] High torque	All set-ups	FALSE	-	Uint8
H-45	Local Mode Configuration	[2] As mode par H-40	All set-ups	TRUE	-	Uint8
H-46	Back EMF at 1000 RPM	ExpressionLimit	All set-ups	FALSE	0	Uint16
H-47	Motor Angle Offset	0 N/A	All set-ups	FALSE	0	Int16
H-5#						
H-50	Motor Magnetisation at Zero Speed	100 %	All set-ups	TRUE	0	Uint16
H-51	Min Speed Normal Magnetising [RPM]	ExpressionLimit	All set-ups	TRUE	67	Uint16
H-52	Min Speed Normal Magnetising [Hz]	ExpressionLimit	All set-ups	TRUE	-1	Uint16
H-53	Model Shift Frequency	ExpressionLimit	All set-ups	FALSE	-1	Uint16
H-55	U/f Characteristic - U	ExpressionLimit	All set-ups	TRUE	-1	Uint16
H-56	U/f Characteristic - F	ExpressionLimit	All set-ups	TRUE	-1	Uint16
H-6#						
H-61	High Speed Load Compensation	100 %	All set-ups	TRUE	0	Int16
H-64	Resonance Dampening	100 %	All set-ups	TRUE	0	Uint16
H-65	Resonance Dampening Time Constant	5 ms	All set-ups	TRUE	-3	Uint8
H-66	Min. Current at Low Speed	100 %	All set-ups	TRUE	0	Uint8
H-7#						
H-70	Warning Current Low	0.00 A	All set-ups	TRUE	-2	Uint32
H-71	Warning Current High	ImaxVLT (P1637)	All set-ups	TRUE	-2	Uint32
H-72	Warning Speed Low	0 RPM	All set-ups	TRUE	67	Uint16
H-73	Warning Speed High	outputSpeedHighLimit (P413)	All set-ups	TRUE	67	Uint16
H-74	Warning Reference Low	-999999.999 N/A	All set-ups	TRUE	-3	Int32
H-75	Warning Reference High	999999.999 N/A	All set-ups	TRUE	-3	Int32
H-76	Warning Feedback Low	-999999.999 ReferenceFeedbackUnit	All set-ups	TRUE	-3	Int32
H-77	Warning Feedback High	999999.999 ReferenceFeedbackUnit	All set-ups	TRUE	-3	Int32
H-78	Missing Motor Phase Function	null	All set-ups	TRUE	-	Uint8

Par. No. #	Parameter description	Default value	4-set-up	Change during operation	Conversion index	Type
H-8#						
H-80	Function at Stop	[0] Coast	All set-ups	TRUE	-	Uint8
H-81	Min Speed for Function at Stop [RPM]	ExpressionLimit	All set-ups	TRUE	67	Uint16
H-82	Min Speed for Function at Stop [Hz]	ExpressionLimit	All set-ups	TRUE	-1	Uint16
H-83	Precise Stop Function	[0] Precise ramp stop	All set-ups	FALSE	-	Uint8
H-84	Precise Stop Counter Value	100000 N/A	All set-ups	TRUE	0	Uint32
H-85	Precise Stop Speed Compensation Delay	10 ms	All set-ups	TRUE	-3	Uint8
H-87	Load Type	[0] Passive load	All set-ups	TRUE	-	Uint8
H-88	Minimum Inertia	ExpressionLimit	All set-ups	FALSE	-4	Uint32
H-89	Maximum Inertia	ExpressionLimit	All set-ups	FALSE	-4	Uint32
H-9#						
H-95	KTY Sensor Type	[0] KTY Sensor 1	All set-ups	TRUE	-	Uint8
H-96	KTY Thermistor Input	[0] None	All set-ups	TRUE	-	Uint8
H-97	KTY Threshold level	80 °C	1 set-up	TRUE	100	Int16

4.3.7 AN-## Analog In / Out

Par. No. #	Parameter description	Default value	4-set-up	Change during operation	Conversion index	Type
AN-0#						
AN-00	Live Zero Timeout Time	10 s	All set-ups	TRUE	0	Uint8
AN-01	Live Zero Timeout Function	[0] Off	All set-ups	TRUE	-	Uint8
AN-1#						
AN-10	Terminal 53 Low Voltage	0.07 V	All set-ups	TRUE	-2	Int16
AN-11	Terminal 53 High Voltage	10.00 V	All set-ups	TRUE	-2	Int16
AN-12	Terminal 53 Low Current	0.14 mA	All set-ups	TRUE	-5	Int16
AN-13	Terminal 53 High Current	20.00 mA	All set-ups	TRUE	-5	Int16
AN-14	Terminal 53 Low Ref./Feedb. Value	0 ReferenceFeedbackUnit	All set-ups	TRUE	-3	Int32
AN-15	Terminal 53 High Ref./Feedb. Value	ExpressionLimit	All set-ups	TRUE	-3	Int32
AN-16	Terminal 53 Filter Time Constant	0.001 s	All set-ups	TRUE	-3	Uint16
AN-2#						
AN-20	Terminal 54 Low Voltage	0.07 V	All set-ups	TRUE	-2	Int16
AN-21	Terminal 54 High Voltage	10.00 V	All set-ups	TRUE	-2	Int16
AN-22	Terminal 54 Low Current	0.14 mA	All set-ups	TRUE	-5	Int16
AN-23	Terminal 54 High Current	20.00 mA	All set-ups	TRUE	-5	Int16
AN-24	Terminal 54 Low Ref./Feedb. Value	0 ReferenceFeedbackUnit	All set-ups	TRUE	-3	Int32
AN-25	Terminal 54 High Ref./Feedb. Value	ExpressionLimit	All set-ups	TRUE	-3	Int32
AN-26	Terminal 54 Filter Time Constant	0.001 s	All set-ups	TRUE	-3	Uint16
AN-3#						
AN-30	Terminal X30/11 Low Voltage	0.07 V	All set-ups	TRUE	-2	Int16
AN-31	Terminal X30/11 High Voltage	10.00 V	All set-ups	TRUE	-2	Int16
AN-34	Term. X30/11 Low Ref./Feedb. Value	0 ReferenceFeedbackUnit	All set-ups	TRUE	-3	Int32
AN-35	Term. X30/11 High Ref./Feedb. Value	ExpressionLimit	All set-ups	TRUE	-3	Int32
AN-36	Term. X30/11 Filter Time Constant	0.001 s	All set-ups	TRUE	-3	Uint16
AN-4#						
AN-40	Terminal X30/12 Low Voltage	0.07 V	All set-ups	TRUE	-2	Int16
AN-41	Terminal X30/12 High Voltage	10.00 V	All set-ups	TRUE	-2	Int16
AN-44	Term. X30/12 Low Ref./Feedb. Value	0 ReferenceFeedbackUnit	All set-ups	TRUE	-3	Int32
AN-45	Term. X30/12 High Ref./Feedb. Value	ExpressionLimit	All set-ups	TRUE	-3	Int32
AN-46	Term. X30/12 Filter Time Constant	0.001 s	All set-ups	TRUE	-3	Uint16
AN-5#						
AN-50	Terminal 42 Output	null	All set-ups	TRUE	-	Uint8
AN-51	Terminal 42 Output Min Scale	0.00 %	All set-ups	TRUE	-2	Int16
AN-52	Terminal 42 Output Max Scale	100.00 %	All set-ups	TRUE	-2	Int16
AN-53	Terminal 42 Output Bus Control	0.00 %	All set-ups	TRUE	-2	N2
AN-54	Terminal 42 Output Timeout Preset	0.00 %	1 set-up	TRUE	-2	Uint16
AN-6#						
AN-60	Terminal X30/8 Output	null	All set-ups	TRUE	-	Uint8
AN-61	Terminal X30/8 Min. Scale	0.00 %	All set-ups	TRUE	-2	Int16
AN-62	Terminal X30/8 Max. Scale	100.00 %	All set-ups	TRUE	-2	Int16
AN-7#						
AN-70	Terminal X45/1 Output	null	All set-ups	TRUE	-	Uint8
AN-71	Terminal X45/1 Min. Scale	0.00 %	All set-ups	TRUE	-2	Int16
AN-72	Terminal X45/1 Max. Scale	100.00 %	All set-ups	TRUE	-2	Int16
AN-73	Terminal X45/1 Bus Control	0.00 %	All set-ups	TRUE	-2	N2
AN-74	Terminal X45/1 Output Timeout Preset	0.00 %	1 set-up	TRUE	-2	Uint16
AN-8#						
AN-80	Terminal X45/3 Output	null	All set-ups	TRUE	-	Uint8
AN-81	Terminal X45/3 Min. Scale	0.00 %	All set-ups	TRUE	-2	Int16
AN-82	Terminal X45/3 Max. Scale	100.00 %	All set-ups	TRUE	-2	Int16
AN-83	Terminal X45/3 Bus Control	0.00 %	All set-ups	TRUE	-2	N2
AN-84	Terminal X45/3 Output Timeout Preset	0.00 %	1 set-up	TRUE	-2	Uint16

4.3.8 SP-## Special Functions

Par. No. #	Parameter description	Default value	4-set-up	Change during operation	Conversion index	Type
SP-1#						
SP-10	Line failure	[0] No function	All set-ups	FALSE	-	Uint8
SP-11	Line Voltage at Input Fault	ExpressionLimit	All set-ups	TRUE	0	Uint16
SP-12	Function at Line Imbalance	[0] Trip	All set-ups	TRUE	-	Uint8
SP-2#						
SP-23	Typecode Setting	null	2 set-ups	FALSE	-	Uint8
SP-24	Trip Delay at Current Limit	60 s	All set-ups	TRUE	0	Uint8
SP-25	Trip Delay at Torque Limit	60 s	All set-ups	TRUE	0	Uint8
SP-26	Trip Delay at Drive Fault	ExpressionLimit	All set-ups	TRUE	0	Uint8
SP-28	Production Settings	[0] No action	All set-ups	TRUE	-	Uint8
SP-29	Service Code	0 N/A	All set-ups	TRUE	0	Int32
SP-3#						
SP-30	Current Lim Cont, Proportional Gain	100 %	All set-ups	FALSE	0	Uint16
SP-31	Current Lim Contr, Integration Time	0.020 s	All set-ups	FALSE	-3	Uint16
SP-4#						
SP-40	VT Level	66 %	All set-ups	FALSE	0	Uint8
SP-41	Energy Savings Min. Magnetisation	ExpressionLimit	All set-ups	TRUE	0	Uint8
SP-42	Energy Savings Min. Frequency	10 Hz	All set-ups	TRUE	0	Uint8
SP-43	Motor Cosphi	ExpressionLimit	All set-ups	TRUE	-2	Uint16
SP-5#						
SP-50	RFI Filter	[1] On	1 set-up	FALSE	-	Uint8
SP-52	Fan Operation	[0] Auto	All set-ups	TRUE	-	Uint8
SP-53	Fan Monitor	[1] Warning	All set-ups	TRUE	-	Uint8
SP-55	Output Filter	[0] No Filter	1 set-up	FALSE	-	Uint8
SP-56	Capacitance Output Filter	2.0 uF	1 set-up	FALSE	-7	Uint16
SP-57	Inductance Output Filter	7.000 mH	1 set-up	FALSE	-6	Uint16
SP-59	Actual Number of Inverter Units	ExpressionLimit	1 set-up	FALSE	0	Uint8
SP-6#						
SP-63	Option Supplied by External 24VDC	[1] Yes	2 set-ups	FALSE	-	Uint8
SP-7#						
SP-71	Accel Time 1 S-ramp Ratio at Accel. Start	50 %	All set-ups	TRUE	0	Uint8
SP-72	Accel Time 1 S-ramp Ratio at Accel. End	50 %	All set-ups	TRUE	0	Uint8
SP-73	Decel Time 1 S-ramp Ratio at Decel. Start	50 %	All set-ups	TRUE	0	Uint8
SP-74	Decel Time 1 S-ramp Ratio at Decel. End	50 %	All set-ups	TRUE	0	Uint8
SP-76	Accel/Decel Time 2 Type	[0] Linear	All set-ups	TRUE	-	Uint8
SP-79	Accel Time 2 S-ramp Ratio at Accel. Start	50 %	All set-ups	TRUE	0	Uint8
SP-8#						
SP-80	Accel Time 2 S-ramp Ratio at Accel. End	50 %	All set-ups	TRUE	0	Uint8
SP-81	Decel Time 2 S-ramp Ratio at Decel. Start	50 %	All set-ups	TRUE	0	Uint8
SP-82	Decel Time 2 S-ramp Ratio at Decel. End	50 %	All set-ups	TRUE	0	Uint8
SP-84	Accel/Decel Ramp 3 Type	[0] Linear	All set-ups	TRUE	-	Uint8
SP-87	Accel Time 3 S-ramp Ratio at Accel. Start	50 %	All set-ups	TRUE	0	Uint8
SP-88	Accel Time 3 S-ramp Ratio at Accel. End	50 %	All set-ups	TRUE	0	Uint8
SP-89	Decel Time 3 S-ramp Ratio at Decel. Start	50 %	All set-ups	TRUE	0	Uint8
SP-9#						
SP-90	Decel Time 3 S-ramp Ratio at Decel. End	50 %	All set-ups	TRUE	0	Uint8
SP-92	Accel/Decel Ramp 4 Type	[0] Linear	All set-ups	TRUE	-	Uint8
SP-95	Accel Time 4 S-ramp Ratio at Accel. Start	50 %	All set-ups	TRUE	0	Uint8
SP-96	Accel Time 4 S-ramp Ratio at Accel. End	50 %	All set-ups	TRUE	0	Uint8
SP-97	Decel Time 4 S-ramp Ratio at Decel. Start	50 %	All set-ups	TRUE	0	Uint8
SP-98	Decel Time 4 S-ramp Ratio at Decel. End	50 %	All set-ups	TRUE	0	Uint8

4.3.9 O-## Options/Comms

Par. No. #	Parameter description	Default value	4-set-up	Change during operation	Conversion index	Type
O-0#						
O-01	Control Site	[0] Digital and ctrl.word	All set-ups	TRUE	-	Uint8
O-02	Control Word Source	null	All set-ups	TRUE	-	Uint8
O-03	Control Word Timeout Time	1.0 s	1 set-up	TRUE	-1	Uint32
O-04	Control Word Timeout Function	[0] Off	1 set-up	TRUE	-	Uint8
O-05	End-of-Timeout Function	[1] Resume set-up	1 set-up	TRUE	-	Uint8
O-06	Reset Control Word Timeout	[0] Do not reset	All set-ups	TRUE	-	Uint8
O-07	Diagnosis Trigger	[0] Disable	2 set-ups	TRUE	-	Uint8
O-1#						
O-10	Control Word Profile	[0] Drive Profile	All set-ups	TRUE	-	Uint8
O-13	Configurable Status Word STW	[1] Profile Default	All set-ups	TRUE	-	Uint8
O-14	Configurable Control Word CTW	[1] Profile default	All set-ups	TRUE	-	Uint8
O-3#						
O-30	Protocol	[0] Drive	1 set-up	TRUE	-	Uint8
O-31	Address	1 N/A	1 set-up	TRUE	0	Uint8
O-32	Drive Port Baud Rate	null	1 set-up	TRUE	-	Uint8
O-33	Drive port parity	[0] Even Parity, 1 Stop Bit	1 set-up	TRUE	-	Uint8
O-35	Minimum Response Delay	10 ms	All set-ups	TRUE	-3	Uint16
O-36	Max Response Delay	ExpressionLimit	1 set-up	TRUE	-3	Uint16
O-37	Max Inter-Char Delay	ExpressionLimit	1 set-up	TRUE	-5	Uint16
O-4#						
O-40	Telegram Selection	[1] Standard telegram 1	2 set-ups	TRUE	-	Uint8
O-5#						
O-50	Coasting Select	[3] Logic OR	All set-ups	TRUE	-	Uint8
O-51	Quick Stop Select	[3] Logic OR	All set-ups	TRUE	-	Uint8
O-52	DC Brake Select	[3] Logic OR	All set-ups	TRUE	-	Uint8
O-53	Start Select	[3] Logic OR	All set-ups	TRUE	-	Uint8
O-54	Reversing Select	[3] Logic OR	All set-ups	TRUE	-	Uint8
O-55	Set-up Select	[3] Logic OR	All set-ups	TRUE	-	Uint8
O-56	Preset Reference Select	[3] Logic OR	All set-ups	TRUE	-	Uint8
O-8#						
O-80	Bus Message Count	0 N/A	All set-ups	TRUE	0	Uint32
O-81	Bus Error Count	0 N/A	All set-ups	TRUE	0	Uint32
O-82	Slave Messages Rcvd	0 N/A	All set-ups	TRUE	0	Uint32
O-83	Slave Error Count	0 N/A	All set-ups	TRUE	0	Uint32
O-9#						
O-90	Bus Jog 1 Speed	100 RPM	All set-ups	TRUE	67	Uint16
O-91	Bus Jog 2 Speed	200 RPM	All set-ups	TRUE	67	Uint16

4.3.10 DN-## DevicNet

Par. No. #	Parameter description	Default value	4-set-up	Change during operation	Conversion index	Type
DN-0#						
DN-00	DeviceNet Protocol	null	2 set-ups	FALSE	-	Uint8
DN-01	Baud Rate Select	null	2 set-ups	TRUE	-	Uint8
DN-02	MAC ID	ExpressionLimit	2 set-ups	TRUE	0	Uint8
DN-05	Readout Transmit Error Counter	0 N/A	All set-ups	TRUE	0	Uint8
DN-06	Readout Receive Error Counter	0 N/A	All set-ups	TRUE	0	Uint8
DN-07	Readout Bus Off Counter	0 N/A	All set-ups	TRUE	0	Uint8
DN-1#						
DN-10	Process Data Type Selection	null	All set-ups	TRUE	-	Uint8
DN-11	Process Data Config Write	ExpressionLimit	All set-ups	TRUE	-	Uint16
DN-12	Process Data Config Read	ExpressionLimit	All set-ups	TRUE	-	Uint16
DN-13	Warning Parameter	0 N/A	All set-ups	TRUE	0	Uint16
DN-14	Net Reference	[0] Off	2 set-ups	TRUE	-	Uint8
DN-15	Net Control	[0] Off	2 set-ups	TRUE	-	Uint8
DN-18	internal_process_data_config_write	ExpressionLimit	All set-ups	TRUE	0	Uint16
DN-19	internal_process_data_config_read	ExpressionLimit	All set-ups	TRUE	0	Uint16
DN-2#						
DN-20	COS Filter 1	0 N/A	All set-ups	FALSE	0	Uint16
DN-21	COS Filter 2	0 N/A	All set-ups	FALSE	0	Uint16
DN-22	COS Filter 3	0 N/A	All set-ups	FALSE	0	Uint16
DN-23	COS Filter 4	0 N/A	All set-ups	FALSE	0	Uint16
DN-3#						
DN-30	Array Index	0 N/A	2 set-ups	TRUE	0	Uint8
DN-31	Store Data Values	[0] Off	All set-ups	TRUE	-	Uint8
DN-32	Devicenet Revision	ExpressionLimit	All set-ups	TRUE	0	Uint16
DN-33	Store Always	[0] Off	1 set-up	TRUE	-	Uint8
DN-34	DeviceNet Product Code	ExpressionLimit	1 set-up	TRUE	0	Uint16
DN-39	Devicenet F Parameters	0 N/A	All set-ups	TRUE	0	Uint32
DN-5#						

4.3.11 PB-## Profibus

Par. No. #	Parameter description	Default value	4-set-up	Change during operation	Conversion index	Type
PB-0#						
PB-00	Setpoint	0 N/A	All set-ups	TRUE	0	Uint16
PB-07	Actual Value	0 N/A	All set-ups	FALSE	0	Uint16
PB-1#						
PB-15	PCD Write Configuration	ExpressionLimit	2 set-ups	TRUE	-	Uint16
PB-16	PCD Read Configuration	ExpressionLimit	2 set-ups	TRUE	-	Uint16
PB-18	Node Address	126 N/A	1 set-up	TRUE	0	Uint8
PB-2#						
PB-22	Telegram Selection	[108] PPO 8	1 set-up	TRUE	-	Uint8
PB-23	Parameters for Signals	0	All set-ups	TRUE	-	Uint16
PB-27	Parameter Edit	[1] Enabled	2 set-ups	FALSE	-	Uint16
PB-28	Process Control	[1] Enable cyclic master	2 set-ups	FALSE	-	Uint8
PB-3#						
PB-31	Safe Address	0 N/A	1 set-up	TRUE	0	Uint16
PB-4#						
PB-44	Fault Message Counter	0 N/A	All set-ups	TRUE	0	Uint16
PB-45	Fault Code	0 N/A	All set-ups	TRUE	0	Uint16
PB-47	Fault Number	0 N/A	All set-ups	TRUE	0	Uint16
PB-5#						
PB-52	Fault Situation Counter	0 N/A	All set-ups	TRUE	0	Uint16
PB-53	Profibus Warning Word	0 N/A	All set-ups	TRUE	0	V2
PB-6#						
PB-63	Actual Baud Rate	[255] No baudrate found	All set-ups	TRUE	-	Uint8
PB-64	Device Identification	0 N/A	All set-ups	TRUE	0	Uint16
PB-65	Profile Number	0 N/A	All set-ups	TRUE	0	OctStr[2]
PB-67	Control Word 1	0 N/A	All set-ups	TRUE	0	V2
PB-68	Status Word 1	0 N/A	All set-ups	TRUE	0	V2
PB-7#						
PB-71	Profibus Save Data Values	[0] Off	All set-ups	TRUE	-	Uint8
PB-72	ProfibusDriveReset	[0] No action	1 set-up	FALSE	-	Uint8
PB-8#						
PB-80	Defined Parameters (1)	0 N/A	All set-ups	FALSE	0	Uint16
PB-81	Defined Parameters (2)	0 N/A	All set-ups	FALSE	0	Uint16
PB-82	Defined Parameters (3)	0 N/A	All set-ups	FALSE	0	Uint16
PB-83	Defined Parameters (4)	0 N/A	All set-ups	FALSE	0	Uint16
PB-84	Defined Parameters (5)	0 N/A	All set-ups	FALSE	0	Uint16
PB-9#						
PB-90	Changed Parameters (1)	0 N/A	All set-ups	FALSE	0	Uint16
PB-91	Changed Parameters (2)	0 N/A	All set-ups	FALSE	0	Uint16
PB-92	Changed Parameters (3)	0 N/A	All set-ups	FALSE	0	Uint16
PB-93	Changed parameters (4)	0 N/A	All set-ups	FALSE	0	Uint16
PB-94	Changed parameters (5)	0 N/A	All set-ups	FALSE	0	Uint16
PB-99	Profibus Revision Counter	0 N/A	All set-ups	TRUE	0	Uint16

4.3.12 ID-## Drive Information

Par. No. #	Parameter description	Default value	4-set-up	Change during operation	Conversion index	Type
ID-0#						
ID-00	Operating Hours	0 h	All set-ups	FALSE	74	Uint32
ID-01	Running Hours	0 h	All set-ups	FALSE	74	Uint32
ID-02	kWh Counter	0 kWh	All set-ups	FALSE	75	Uint32
ID-03	Power Up's	0 N/A	All set-ups	FALSE	0	Uint32
ID-04	Over Temp's	0 N/A	All set-ups	FALSE	0	Uint16
ID-05	Over Volt's	0 N/A	All set-ups	FALSE	0	Uint16
ID-06	Reset kWh Counter	[0] Do not reset	All set-ups	TRUE	-	Uint8
ID-07	Reset Running Hours Counter	[0] Do not reset	All set-ups	TRUE	-	Uint8
ID-1#						
ID-10	Trending Source	0	2 set-ups	TRUE	-	Uint16
ID-11	Trending Interval	ExpressionLimit	2 set-ups	TRUE	-3	TimD
ID-12	Trigger Event	[0] False	1 set-up	TRUE	-	Uint8
ID-13	Trending Mode	[0] Trend always	2 set-ups	TRUE	-	Uint8
ID-14	Samples Before Trigger	50 N/A	2 set-ups	TRUE	0	Uint8
ID-2#						
ID-20	Historic Log: Event	0 N/A	All set-ups	FALSE	0	Uint8
ID-21	Historic Log: Value	0 N/A	All set-ups	FALSE	0	Uint32
ID-22	Historic Log: Time	0 ms	All set-ups	FALSE	-3	Uint32
ID-3#						
ID-30	Fault Log: Error Code	0 N/A	All set-ups	FALSE	0	Uint8
ID-31	Fault Log: Value	0 N/A	All set-ups	FALSE	0	Int16
ID-32	Fault Log: Time	0 s	All set-ups	FALSE	0	Uint32
ID-4#						
ID-40	Drive Type	0 N/A	All set-ups	FALSE	0	VisStr[6]
ID-41	Power Section	0 N/A	All set-ups	FALSE	0	VisStr[20]
ID-42	Voltage	0 N/A	All set-ups	FALSE	0	VisStr[20]
ID-43	Software Version	0 N/A	All set-ups	FALSE	0	VisStr[5]
ID-44	Ordered Typecode String	0 N/A	All set-ups	FALSE	0	VisStr[40]
ID-45	Actual Typecode String	0 N/A	All set-ups	FALSE	0	VisStr[40]
ID-46	GE Product No.	0 N/A	All set-ups	FALSE	0	VisStr[8]
ID-47	Power Card Ordering No	0 N/A	All set-ups	FALSE	0	VisStr[8]
ID-48	Keypad ID Number	0 N/A	All set-ups	FALSE	0	VisStr[20]
ID-49	SW ID Control Card	0 N/A	All set-ups	FALSE	0	VisStr[20]
ID-5#						
ID-50	SW ID Power Card	0 N/A	All set-ups	FALSE	0	VisStr[20]
ID-51	Drive Serial Number	0 N/A	All set-ups	FALSE	0	VisStr[10]
ID-53	Power Card Serial Number	0 N/A	All set-ups	FALSE	0	VisStr[19]
ID-6#						
ID-60	Option Mounted	0 N/A	All set-ups	FALSE	0	VisStr[30]
ID-61	Option SW Version	0 N/A	All set-ups	FALSE	0	VisStr[20]
ID-62	Option Ordering No	0 N/A	All set-ups	FALSE	0	VisStr[8]
ID-63	Option Serial No	0 N/A	All set-ups	FALSE	0	VisStr[18]

Par. No. #	Parameter description	Default value	4-set-up	Change during operation	Conversion index	Type
ID-7#						
ID-70	Option in Slot A	0 N/A	All set-ups	FALSE	0	VisStr[30]
ID-71	Slot A Option SW Version	0 N/A	All set-ups	FALSE	0	VisStr[20]
ID-72	Option in Slot B	0 N/A	All set-ups	FALSE	0	VisStr[30]
ID-73	Slot B Option SW Version	0 N/A	All set-ups	FALSE	0	VisStr[20]
ID-74	Option in Slot C1	0 N/A	All set-ups	FALSE	0	VisStr[30]
ID-75	Slot C0 Option SW Version	0 N/A	All set-ups	FALSE	0	VisStr[20]
ID-76	Option in Slot C2	0 N/A	All set-ups	FALSE	0	VisStr[30]
ID-77	Slot C1 Option SW Version	0 N/A	All set-ups	FALSE	0	VisStr[20]
ID-9#						
ID-92	Defined Parameters	0 N/A	All set-ups	FALSE	0	Uint16
ID-93	Modified Parameters	0 N/A	All set-ups	FALSE	0	Uint16
ID-98	Drive Identification	0 N/A	All set-ups	FALSE	0	VisStr[40]
ID-99	Parameter Metadata	0 N/A	All set-ups	FALSE	0	Uint16

4.3.13 DR-## Data Readouts

Par. No. #	Parameter description	Default value	4-set-up	Change during operation	Conversion index	Type
DR-0#						
DR-00	Control Word	0 N/A	All set-ups	FALSE	0	V2
DR-01	Reference [Unit]	0.000 ReferenceFeedbackUnit	All set-ups	FALSE	-3	Int32
DR-02	Reference %	0.0 %	All set-ups	FALSE	-1	Int16
DR-03	Status Word	0 N/A	All set-ups	FALSE	0	V2
DR-05	Main Actual Value [%]	0.00 %	All set-ups	FALSE	-2	N2
DR-09	Custom Readout	0.00 CustomReadoutUnit	All set-ups	FALSE	-2	Int32
DR-1#						
DR-10	Power [kW]	0.00 kW	All set-ups	FALSE	1	Int32
DR-11	Power [hp]	0.00 hp	All set-ups	FALSE	-2	Int32
DR-12	Motor Rated Voltage	0.0 V	All set-ups	FALSE	-1	Uint16
DR-13	Frequency	0.0 Hz	All set-ups	FALSE	-1	Uint16
DR-14	Motor Current	0.00 A	All set-ups	FALSE	-2	Int32
DR-15	Frequency [%]	0.00 %	All set-ups	FALSE	-2	N2
DR-16	Torque [Nm]	0.0 Nm	All set-ups	FALSE	-1	Int16
DR-17	Speed [RPM]	0 RPM	All set-ups	FALSE	67	Int32
DR-18	Motor Thermal	0 %	All set-ups	FALSE	0	Uint8
DR-19	KTY sensor temperature	0 °C	All set-ups	FALSE	100	Int16
DR-2#						
DR-20	Motor Angle	0 N/A	All set-ups	TRUE	0	Uint16
DR-22	Torque [%]	0 %	All set-ups	FALSE	0	Int16
DR-25	Torque [Nm] High	0.0 Nm	All set-ups	FALSE	-1	Int32
DR-3#						
DR-30	DC Link Voltage	0 V	All set-ups	FALSE	0	Uint16
DR-32	Brake Energy /s	0.000 kW	All set-ups	FALSE	0	Uint32
DR-33	Brake Energy /2 min	0.000 kW	All set-ups	FALSE	0	Uint32
DR-34	Heatsink Temp.	0 °C	All set-ups	FALSE	100	Uint8
DR-35	Drive Thermal	0 %	All set-ups	FALSE	0	Uint8
DR-36	Drive Nominal Current	ExpressionLimit	All set-ups	FALSE	-2	Uint32
DR-37	Drive Max. Current	ExpressionLimit	All set-ups	FALSE	-2	Uint32
DR-38	Logic Controller State	0 N/A	All set-ups	FALSE	0	Uint8
DR-39	Control Card Temp.	0 °C	All set-ups	FALSE	100	Uint8
DR-4#						
DR-40	Trending Buffer Full	[0] No	All set-ups	TRUE	-	Uint8
DR-5#						
DR-50	External Reference	0.0 N/A	All set-ups	FALSE	-1	Int16
DR-51	Pulse Reference	0.0 N/A	All set-ups	FALSE	-1	Int16
DR-52	Feedback [Unit]	0.000 ReferenceFeedbackUnit	All set-ups	FALSE	-3	Int32
DR-53	Digi Pot Reference	0.00 N/A	All set-ups	FALSE	-2	Int16
DR-6#						
DR-60	Digital Input	0 N/A	All set-ups	FALSE	0	Uint16
DR-61	Terminal 53 Switch Setting	[0] Current	All set-ups	FALSE	-	Uint8
DR-62	Analog Input 53	0.000 N/A	All set-ups	FALSE	-3	Int32
DR-63	Terminal 54 Switch Setting	[0] Current	All set-ups	FALSE	-	Uint8
DR-64	Analog Input 54	0.000 N/A	All set-ups	FALSE	-3	Int32
DR-65	Analog Output 42 [mA]	0.000 N/A	All set-ups	FALSE	-3	Int16
DR-66	Digital Output [bin]	0 N/A	All set-ups	FALSE	0	Int16
DR-67	Freq. Input #29 [Hz]	0 N/A	All set-ups	FALSE	0	Int32
DR-68	Freq. Input #33 [Hz]	0 N/A	All set-ups	FALSE	0	Int32
DR-69	Pulse Output #27 [Hz]	0 N/A	All set-ups	FALSE	0	Int32

Par. No. #	Parameter description	Default value	4-set-up	Change during operation	Conversion index	Type
DR-7#						
DR-70	Pulse Output #29 [Hz]	0 N/A	All set-ups	FALSE	0	Int32
DR-71	Relay Output [bin]	0 N/A	All set-ups	FALSE	0	Int16
DR-72	Counter A	0 N/A	All set-ups	TRUE	0	Int32
DR-73	Counter B	0 N/A	All set-ups	TRUE	0	Int32
DR-74	Prec. Stop Counter	0 N/A	All set-ups	TRUE	0	Uint32
DR-75	Analog In X30/11	0.000 N/A	All set-ups	FALSE	-3	Int32
DR-76	Analog In X30/12	0.000 N/A	All set-ups	FALSE	-3	Int32
DR-77	Analog Out X30/8 [mA]	0.000 N/A	All set-ups	FALSE	-3	Int16
DR-78	Analog Out X45/1 [mA]	0.000 N/A	All set-ups	FALSE	-3	Int16
DR-79	Analog Out X45/3 [mA]	0.000 N/A	All set-ups	FALSE	-3	Int16
DR-8#						
DR-80	Fieldbus CTW 1	0 N/A	All set-ups	FALSE	0	V2
DR-82	Fieldbus REF 1	0 N/A	All set-ups	FALSE	0	N2
DR-84	Comm. Option STW	0 N/A	All set-ups	FALSE	0	V2
DR-85	Drive Port CTW 1	0 N/A	All set-ups	FALSE	0	V2
DR-86	Drive Port REF 1	0 N/A	All set-ups	FALSE	0	N2
DR-9#						
DR-90	Alarm Word	0 N/A	All set-ups	FALSE	0	Uint32
DR-91	Alarm Word 2	0 N/A	All set-ups	FALSE	0	Uint32
DR-92	Warning Word	0 N/A	All set-ups	FALSE	0	Uint32
DR-93	Warning Word 2	0 N/A	All set-ups	FALSE	0	Uint32
DR-94	Ext. Status Word	0 N/A	All set-ups	FALSE	0	Uint32

4.3.14 LC-## Logic Controller

Par. No. #	Parameter description	Default value	4-set-up	Change during operation	Conversion index	Type
LC-0#						
LC-00	Logic Controller Mode	null	2 set-ups	TRUE	-	Uint8
LC-01	Start Event	null	2 set-ups	TRUE	-	Uint8
LC-02	Stop Event	null	2 set-ups	TRUE	-	Uint8
LC-03	Reset Logic Controller	[0] Do not reset Logic Controller	All set-ups	TRUE	-	Uint8
LC-1#						
LC-10	Comparator Operand	null	2 set-ups	TRUE	-	Uint8
LC-11	Comparator Operator	null	2 set-ups	TRUE	-	Uint8
LC-12	Comparator Value	ExpressionLimit	2 set-ups	TRUE	-3	Int32
LC-2#						
LC-20	Logic Controller Timer	ExpressionLimit	1 set-up	TRUE	-3	TimD
LC-4#						
LC-40	Logic Rule Boolean 1	null	2 set-ups	TRUE	-	Uint8
LC-41	Logic Rule Operator 1	null	2 set-ups	TRUE	-	Uint8
LC-42	Logic Rule Boolean 2	null	2 set-ups	TRUE	-	Uint8
LC-43	Logic Rule Operator 2	null	2 set-ups	TRUE	-	Uint8
LC-44	Logic Rule Boolean 3	null	2 set-ups	TRUE	-	Uint8
LC-5#						
LC-51	Logic Controller Event	null	2 set-ups	TRUE	-	Uint8
LC-52	Logic Controller Action	null	2 set-ups	TRUE	-	Uint8

4.3.15 B-## Braking Functions

Par. No. #	Parameter description	Default value	4-set-up	Change during operation	Conversion index	Type
B-0#						
B-00	DC Hold Current	50 %	All set-ups	TRUE	0	Uint8
B-01	DC Brake Current	50 %	All set-ups	TRUE	0	Uint16
B-02	DC Braking Time	10.0 s	All set-ups	TRUE	-1	Uint16
B-03	DC Brake Cut In Speed [RPM]	ExpressionLimit	All set-ups	TRUE	67	Uint16
B-04	DC Brake Cut In Speed [Hz]	ExpressionLimit	All set-ups	TRUE	-1	Uint16
B-1#						
B-10	Brake Function	null	All set-ups	TRUE	-	Uint8
B-11	Brake Resistor (ohm)	ExpressionLimit	All set-ups	TRUE	-2	Uint32
B-12	Brake Power Limit (kW)	ExpressionLimit	All set-ups	TRUE	0	Uint32
B-13	Braking Thermal Overload	[0] Off	All set-ups	TRUE	-	Uint8
B-15	Brake Check	[0] Off	All set-ups	TRUE	-	Uint8
B-16	AC brake Max. Current	100.0 %	All set-ups	TRUE	-1	Uint32
B-17	Over-voltage Control	[0] Disabled	All set-ups	TRUE	-	Uint8
B-2#						
B-20	Release Brake Current	ImaxVLT (P1637)	All set-ups	TRUE	-2	Uint32
B-21	Activate Brake Speed [RPM]	ExpressionLimit	All set-ups	TRUE	67	Uint16
B-22	Activate Brake Speed [Hz]	ExpressionLimit	All set-ups	TRUE	-1	Uint16
B-23	Activate Brake Delay	0.0 s	All set-ups	TRUE	-1	Uint8
B-24	Stop Delay	0.0 s	All set-ups	TRUE	-1	Uint8
B-25	Brake Release Time	0.20 s	All set-ups	TRUE	-2	Uint16
B-26	Torque Ref	0.00 %	All set-ups	TRUE	-2	Int16
B-27	Torque Ramp Time	0.2 s	All set-ups	TRUE	-1	Uint8
B-28	Gain Boost Factor	1.00 N/A	All set-ups	TRUE	-2	Uint16

4.3.16 PI-## PID Controls

Par. No. #	Parameter description	Default value	4-set-up	Change during operation	Conversion index	Type
PI-0#						
PI-00	Speed PID Feedback Source	null	All set-ups	FALSE	-	Uint8
PI-02	Speed PID Proportional Gain	ExpressionLimit	All set-ups	TRUE	-4	Uint32
PI-03	Speed PID Integral Time	ExpressionLimit	All set-ups	TRUE	-4	Uint32
PI-04	Speed PID Differentiation Time	ExpressionLimit	All set-ups	TRUE	-4	Uint16
PI-05	Speed PID Diff. Gain Limit	5.0 N/A	All set-ups	TRUE	-1	Uint16
PI-06	Speed PID Lowpass Filter Time	10.0 ms	All set-ups	TRUE	-4	Uint16
PI-07	Speed PID Feedback Gear Ratio	1.0000 N/A	All set-ups	FALSE	-4	Uint32
PI-08	Speed PID Feed Forward Factor	0 %	All set-ups	FALSE	0	Uint16
PI-1#						
PI-12	Torque PI Proportional Gain	100 %	All set-ups	TRUE	0	Uint16
PI-13	Torque PI Integration Time	0.020 s	All set-ups	TRUE	-3	Uint16
PI-2#						
PI-20	Process CL Feedback 1 Resource	[0] No function	All set-ups	TRUE	-	Uint8
PI-22	Process CL Feedback 2 Resource	[0] No function	All set-ups	TRUE	-	Uint8
PI-3#						
PI-30	Process PID Normal/ Inverse Control	[0] Normal	All set-ups	TRUE	-	Uint8
PI-31	Process PID Anti Windup	[1] On	All set-ups	TRUE	-	Uint8
PI-32	Process PID Start Speed	0 RPM	All set-ups	TRUE	67	Uint16
PI-33	Process PID Proportional Gain	0.01 N/A	All set-ups	TRUE	-2	Uint16
PI-34	Process PID Integral Time	10000.00 s	All set-ups	TRUE	-2	Uint32
PI-35	Process PID Differentiation Time	0.00 s	All set-ups	TRUE	-2	Uint16
PI-36	Process PID Diff. Gain Limit	5.0 N/A	All set-ups	TRUE	-1	Uint16
PI-38	Process PID Feed Forward Factor	0 %	All set-ups	TRUE	0	Uint16
PI-39	On Reference Bandwidth	5 %	All set-ups	TRUE	0	Uint8

4.3.17 EC-## Feedback Option

Par. No. #	Parameter description	Default value	4-set-up	Change during operation	Conversion index	Type
EC-1#						
EC-10	Signal Type	[1] RS422 (5V TTL)	All set-ups	FALSE	-	Uint8
EC-11	Resolution (PPR)	1024 N/A	All set-ups	FALSE	0	Uint16
EC-2#						
EC-20	Protocol Selection	[0] None	All set-ups	FALSE	-	Uint8
EC-21	Resolution (Positions/Rev)	ExpressionLimit	All set-ups	FALSE	0	Uint32
EC-24	SSI Data Length	13 N/A	All set-ups	FALSE	0	Uint8
EC-25	Clock Rate	ExpressionLimit	All set-ups	FALSE	3	Uint16
EC-26	SSI Data Format	[0] Gray code	All set-ups	FALSE	-	Uint8
EC-34	HIPERFACE Baudrate	[4] 9600	All set-ups	FALSE	-	Uint8
EC-6#						
EC-60	Feedback Direction	[0] Clockwise	All set-ups	FALSE	-	Uint8
EC-61	Feedback Signal Monitoring	[1] Warning	All set-ups	TRUE	-	Uint8

4.3.18 RS-## Resolver Interface

Par. No. #	Parameter description	Default value	4-set-up	Change during operation	Conversion index	Type
RS-5#						
RS-50	Poles	2 N/A	1 set-up	FALSE	0	Uint8
RS-51	Input Voltage	7.0 V	1 set-up	FALSE	-1	Uint8
RS-52	Input Frequency	10.0 kHz	1 set-up	FALSE	2	Uint8
RS-53	Transformation Ratio	0.5 N/A	1 set-up	FALSE	-1	Uint8
RS-59	Resolver Interface	[0] Disabled	All set-ups	FALSE	-	Uint8

5 General Specifications

5.1 Electrical Data - 200-240 V

Mains Supply 3 x 200 - 240 VAC										
AF-650 GP/AF-650 GP										
	Typical Shaft Output [kW]	0.25	0.37	0.55	0.75	1.1	1.5	2.2	3	3.7
	Typical Shaft Output [HP] at 208 V	0.3	0.5	0.7	1.0	1.5	2.0	2.9	4.0	4.9
	Unit Size IP 20/IP 21	12	12	12	12	12	12	12	13	13
	Unit Size IP 20 (AF-650 GP only)	11	11	11	11	11	11	-	-	-
	Unit Size IP 55, 66	15	15	15	15	15	15	15	15	15
Output current										
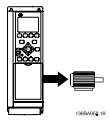	Continuous (3 x 200-240 V) [A]	1.8	2.4	3.5	4.6	6.6	7.5	10.6	12.5	16.7
	Intermittent (3 x 200-240 V) [A]	2.9	3.8	5.6	7.4	10.6	12.0	17.0	20.0	26.7
	Continuous KVA (208 V AC) [KVA]	0.65	0.86	1.26	1.66	2.38	2.70	3.82	4.50	6.00
	Max. cable size (mains, motor, brake) [mm² (AWG[2])]	0.2 - 4 (24 - 10)								
Max. input current										
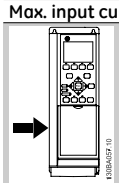	Continuous (3 x 200-240 V) [A]	1.6	2.2	3.2	4.1	5.9	6.8	9.5	11.3	15.0
	Intermittent (3 x 200-240 V) [A]	2.6	3.5	5.1	6.6	9.4	10.9	15.2	18.1	24.0
	Max. pre-fuses[1] [A]	10	10	10	10	20	20	20	32	32
	Environment									
	Estimated power loss at rated max. load [W] [4]	21	29	42	54	63	82	116	155	185
	Weight, Unit Size IP20 [kg]	4.7	4.7	4.8	4.8	4.9	4.9	4.9	6.6	6.6
	11 (IP20)	2.7	2.7	2.7	2.7	2.7	2.7	-	-	-
	15 (IP55, 66)	13.5	13.5	13.5	13.5	13.5	13.5	13.5	13.5	13.5
	Efficiency [4]	0.94	0.94	0.95	0.95	0.96	0.96	0.96	0.96	0.96

0.25 - 3.7 kW only available as 160% high overload.

Mains Supply 3 x 200- 240 VAC							
AF-650 GP/AF-650 GP							
High/ Normal Load*		HO	NO	HO	NO	HO	NO
	Typical Shaft Output [kW]	5.5	7.5	7.5	11	11	15
	Typical Shaft Output [HP] at 208 V	7.5	10	10	15	15	20
	Unit Size IP20	23		23		24	
	Unit Size IP21	21		21		22	
	Unit Size IP55, 66	21		21		22	
Output current							
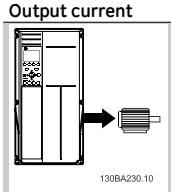	Continuous (3 x 200-240 V) [A]	24.2	30.8	30.8	46.2	46.2	59.4
	Intermittent (60 sec overload) (3 x 200-240 V) [A]	38.7	33.9	49.3	50.8	73.9	65.3
	Continuous KVA (208 V AC) [KVA]	8.7	11.1	11.1	16.6	16.6	21.4
Max. input current							
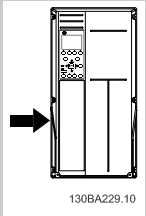	Continuous (3 x 200-240 V) [A]	22	28	28	42	42	54
	Intermittent (60 sec overload) (3 x 200-240 V) [A]	35.2	30.8	44.8	46.2	67.2	59.4
	Max. cable size [mm² (AWG)] [2]	16 (6)		16 (6)		35 (2)	
	Max. pre-fuses [A] [1]	63		63		80	
	Estimated power loss at rated max. load [W] [4]	239	310	371	514	463	602
	Weight, Unit Size IP21, IP 55, 66 [kg]	23		23		27	
	Efficiency[4]	0.964		0.959		0.964	

* High overload = 160% torque during 60 s, Normal overload = 110% torque during 60 s

Mains Supply 3 x 200- 240 VAC											
AF-650 GP/AF-650 GP											
High/ Normal Load*		HO	NO	HO	NO	HO	NO	HO	NO	HO	NO
	Typical Shaft Output [kW]	15	18.5	18.5	22	22	30	30	37	37	45
	Typical Shaft Output [HP] at 208 V	20	25	25	30	30	40	40	50	50	60
	Unit Size IP20	24		33		33		34		34	
	Unit Size IP21	31		31		31		32		32	
	Unit Size IP55, 66	31		31		31		32		32	
Output current											
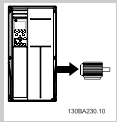 130BA230.10	Continuous (3 x 200-240 V) [A]	59.4	74.8	74.8	88	88	115	115	143	143	170
	Intermittent (60 sec overload) (3 x 200-240 V) [A]	89.1	82.3	112	96.8	132	127	173	157	215	187
	Continuous KVA (208 V AC) [KVA]	21.4	26.9	26.9	31.7	31.7	41.4	41.4	51.5	51.5	61.2
Max. input current											
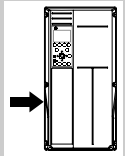 130BA229.10	Continuous (3 x 200-240 V) [A]	54	68	68	80	80	104	104	130	130	154
	Intermittent (60 sec overload) (3 x 200-240 V) [A]	81	74.8	102	88	120	114	156	143	195	169
	Max. cable size, IP20 [mm^2 (AWG)] [2]	35 (2)		90 (3/0)		90 (3/0)		120 (4/0)		120 (4/0)	
	Max. cable size, IP 21/55/66 [mm^2 (AWG)] [2]	90 (3/0)		90 (3/0)		90 (3/0)		120 (4/0)		120 (4/0)	
	Max. pre-fuses [A] [1]	125		125		160		200		250	
	Estimated power loss at rated max. load [W] [4]	624	737	740	845	874	1140	1143	1353	1400	1636
	Weight, Unit Size IP21, IP 55, 66 [kg]	45		45		45		65		65	
	Efficiency[4]	0.96		0.97		0.97		0.97		0.97	
* High overload = 160% torque during 60 s, Normal overload = 110% torque during 60 s											

5.2 Electrical Data - 380-500 V

Mains Supply 3 x 380 - 500 VAC (AF-650 GP), 3 x 380 - 480 VAC (AF-650 GP)											
AF-650 GP/AF-650 GP Typical Shaft Output [kW]		0.37	0.55	0.75	1.1	1.5	2.2	3	4	5.5	7.5
Typical Shaft Output [HP] at 460V		0.5	0.7	1.0	1.5	2.0	2.9	4.0	5.0	7.5	10
Unit Size IP20/IP21		12	12	12	12	12	12	12	12	13	13
Unit Size IP20 (AF-650 GP only)		11	11	11	11	11					
Unit Size IP55, 66		15	15	15	15	15	15	15	15	15	15
Output current High overload 160% for 1 minute											
	Shaft output [kW]	0.37	0.55	0.75	1.1	1.5	2.2	3	4	5.5	7.5
	Continuous (3 x 380-440 V) [A]	1.3	1.8	2.4	3	4.1	5.6	7.2	10	13	16
	Intermittent (3 x 380-440 V) [A]	2.1	2.9	3.8	4.8	6.6	9.0	11.5	16	20.8	25.6
	Continuous (3 x 441-500 V) [A]	1.2	1.6	2.1	2.7	3.4	4.8	6.3	8.2	11	14.5
	Intermittent (3 x 441-500 V) [A]	1.9	2.6	3.4	4.3	5.4	7.7	10.1	13.1	17.6	23.2
	Continuous KVA (400 V AC) [KVA]	0.9	1.3	1.7	2.1	2.8	3.9	5.0	6.9	9.0	11.0
	Continuous KVA (460 V AC) [KVA]	0.9	1.3	1.7	2.4	2.7	3.8	5.0	6.5	8.8	11.6
	Max. cable size (mains, motor, brake) [AWG] [2] [mm²]	24 - 10 AWG 0.2 - 4 mm²							24 - 10 AWG 0.2 - 4 mm²		
Max. input current											
	Continuous (3 x 380-440 V) [A]	1.2	1.6	2.2	2.7	3.7	5.0	6.5	9.0	11.7	14.4
	Intermittent (3 x 380-440 V) [A]	1.9	2.6	3.5	4.3	5.9	8.0	10.4	14.4	18.7	23.0
	Continuous (3 x 441-500 V) [A]	1.0	1.4	1.9	2.7	3.1	4.3	5.7	7.4	9.9	13.0
	Intermittent (3 x 441-500 V) [A]	1.6	2.2	3.0	4.3	5.0	6.9	9.1	11.8	15.8	20.8
	Max. pre-fuses[1][A]	10	10	10	10	10	20	20	20	32	32
	Environment										
	Estimated power loss at rated max. load [W] [4]	35	42	46	58	62	88	116	124	187	255
	Weight, Unit Size IP20	4.7	4.7	4.8	4.8	4.9	4.9	4.9	4.9	6.6	6.6
	Unit Size IP55, 66	13.5	13.5	13.5	13.5	13.5	13.5	13.5	13.5	14.2	14.2
	Efficiency [4]	0.93	0.95	0.96	0.96	0.97	0.97	0.97	0.97	0.97	0.97
0.37 - 7.5 kW only available as 160% high overload.											

5

Mains Supply 3 x 380 - 500 VAC (AF-650 GP), 3 x 380 - 480 VAC (AF-650 GP)

AF-650 GP/AF-650 GP									
High/ Normal Load*		HO	NO	HO	NO	HO	NO	HO	NO
	Typical Shaft output [kW]	11	15	15	18.5	18.5	22.0	22.0	30.0
	Typical Shaft Output [HP] at 460 V	15	20	20	25	25	30	30	40
	Unit Size IP20	23		23		24		24	
	Unit Size IP21	21		21		22		22	
	Unit Size IP55, 66	21		21		22		22	
Output current									
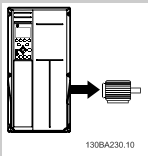 130BA230.10	Continuous (3 x 380-440 V) [A]	24	32	32	37.5	37.5	44	44	61
	Intermittent (60 sec overload) (3 x 380-440 V) [A]	38.4	35.2	51.2	41.3	60	48.4	70.4	67.1
	Continuous (3 x 441-500 V) [A]	21	27	27	34	34	40	40	52
	Intermittent (60 sec overload) (3 x 441-500 V) [A]	33.6	29.7	43.2	37.4	54.4	44	64	57.2
	Continuous KVA (400 V AC) [KVA]	16.6	22.2	22.2	26	26	30.5	30.5	42.3
	Continuous KVA (460 V AC) [KVA]		21.5		27.1		31.9		41.4
Max. input current									
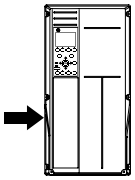 130BA229.10	Continuous (3 x 380-440 V) [A]	22	29	29	34	34	40	40	55
	Intermittent (60 sec overload) (3 x 380-440 V) [A]	35.2	31.9	46.4	37.4	54.4	44	64	60.5
	Continuous (3 x 441-500 V) [A]	19	25	25	31	31	36	36	47
	Intermittent (60 sec overload) (3 x 441-500 V) [A]	30.4	27.5	40	34.1	49.6	39.6	57.6	51.7
	Max. cable size [mm^2 / AWG] 2)	16/6		16/6		35/2		35/2	
	Max. pre-fuses [A] 1	63		63		63		80	
	Estimated power loss at rated max. load [W] 4)	291	392	379	465	444	525	547	739
	Weight, Unit Size IP20	12		12		23.5		23.5	
	Weight, Unit Size IP21, IP 55, 66 [kg]	23		23		27		27	
	Efficiency4)	0.98		0.98		0.98		0.98	

* High overload = 160% torque during 60 s, Normal overload = 110% torque during 60 s

Mains Supply 3 x 380 - 500 VAC (AF-650 GP), 3 x 380 - 480 VAC (AF-650 GP)

AF-650 GP/AF-650 GP											
High/ Normal Load*		HO	NO	HO	NO	HO	NO	HO	NO	HO	NO
	Typical Shaft output [kW]	30	37	37	45	45	55	55	75	75	90
	Typical Shaft Output [HP] at 460V	40	50	50	60	60	75	75	100	100	120
	Unit Size IP20	24		33		33		34		34	
	Unit Size IP21	31		31		31		32		32	
	Unit Size IP55, 66	31		31		31		32		32	
Output current											
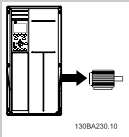 130BA230.10	Continuous (3 x 380-440 V) [A]	61	73	73	90	90	106	106	147	147	177
	Intermittent (60 sec overload) (3 x 380-440 V) [A]	91.5	80.3	110	99	135	117	159	162	221	195
	Continuous (3 x 441-500 V) [A]	52	65	65	80	80	105	105	130	130	160
	Intermittent (60 sec overload) (3 x 441-500 V) [A]	78	71.5	97.5	88	120	116	158	143	195	176
	Continuous KVA (400 V AC) [KVA]	42.3	50.6	50.6	62.4	62.4	73.4	73.4	102	102	123
	Continuous KVA (460 V AC) [KVA]		51.8		63.7		83.7		104		128
Max. input current											
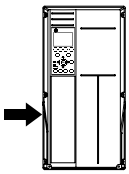 130BA229.10	Continuous (3 x 380-440 V) [A]	55	66	66	82	82	96	96	133	133	161
	Intermittent (60 sec overload) (3 x 380-440 V) [A]	82.5	72.6	99	90.2	123	106	144	146	200	177
	Continuous (3 x 441-500 V) [A]	47	59	59	73	73	95	95	118	118	145
	Intermittent (60 sec overload) (3 x 441-500 V) [A]	70.5	64.9	88.5	80.3	110	105	143	130	177	160
	Max. cable size IP20, mains and motor [mm^2 (AWG[2])]	35 (2)		50 (1)		50 (1)		95 (4/0)		150 (300mcm)	
	Max. cable size IP20, load share and brake [mm^2 (AWG[2])]	35 (2)		50 (1)		50 (1)		95 (4/0)		95 (4/0)	
	Max. cable size, IP21/55/66 [mm^2 (AWG[2])]	90 (3/0)		90 (3/0)		90 (3/0)		120 (4/0)		120 (4/0)	
	Max. pre-fuses [A] [1]	100		125		160		250		250	
	Estimated power loss at rated max. load [W] [4]	570	698	697	843	891	1083	1022	1384	1232	1474
	Weight, Unit Size IP21, IP 55, 66 [kg]	45		45		45		65		65	
	Efficiency[4]	0.98		0.98		0.98		0.98		0.99	
* High overload = 160% torque during 60 s, Normal overload = 110% torque during 60 s											

5

5.3 Electrical Data - 525-600 V

Mains Supply 3 x 525 - 600 VAC (AF-650 GP only)									
AF-650 GP									
	Typical Shaft Output [kW]	0.75	1.1	1.5	2.2	3	4	5.5	7.5
	Typical Shaft Output [HP] at 575V	1.0	1.5	2.0	2.9	4.0	5.0	7.5	10
	Unit Size IP20, 21	12	12	12	12	12	12	13	13
	Unit Size IP55	15	15	15	15	15	15	15	15
Output current									
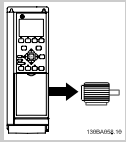	Continuous (3 x 525-550 V) [A]	1.8	2.6	2.9	4.1	5.2	6.4	9.5	11.5
	Intermittent (3 x 525-550 V) [A]	2.9	4.2	4.6	6.6	8.3	10.2	15.2	18.4
	Continuous (3 x 551-600 V) [A]	1.7	2.4	2.7	3.9	4.9	6.1	9.0	11.0
	Intermittent (3 x 551-600 V) [A]	2.7	3.8	4.3	6.2	7.8	9.8	14.4	17.6
	Continuous kVA (525 V AC) [kVA]	1.7	2.5	2.8	3.9	5.0	6.1	9.0	11.0
	Continuous kVA (575 V AC) [kVA]	1.7	2.4	2.7	3.9	4.9	6.1	9.0	11.0
	Max. cable size (mains, motor, brake) [AWG] 2) [mm²]	24 - 10 AWG 0.2 - 4 mm²					24 - 10 AWG 0.2 - 4 mm²		
Max. input current									
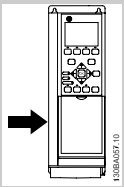	Continuous (3 x 525-600 V) [A]	1.7	2.4	2.7	4.1	5.2	5.8	8.6	10.4
	Intermittent (3 x 525-600 V) [A]	2.7	3.8	4.3	6.6	8.3	9.3	13.8	16.6
	Max. pre-fuses 1) [A]	10	10	10	20	20	20	32	32
	Environment								
	Estimated power loss at rated max. load [W] 4)	35	50	65	92	122	145	195	261
	Weight, Unit Size IP20 [kg]	6.5	6.5	6.5	6.5	6.5	6.5	6.6	6.6
	Weight, Unit Size IP55 [kg]	13.5	13.5	13.5	13.5	13.5	13.5	14.2	14.2
	Efficiency 4)	0.97	0.97	0.97	0.97	0.97	0.97	0.97	0.97

Mains Supply 3 x 525 - 600 VAC

AF-650 GP											
High/ Normal Load*		HO	NO	HO	NO	HO	NO	HO	NO	HO	NO
	Typical Shaft Output [kW]	11	15	15	18.5	18.5	22	22	30	30	37
	Typical Shaft Output [HP] at 575V	15	20	20	25	25	30	30	40	40	50
	Unit Size IP 21, 55, 66	21		21		22		22		31	
	Unit Size IP20	23		23		24		24		24	
Output current											
	Continuous (3 x 525-550 V) [A]	19	23	23	28	28	36	36	43	43	54
	Intermittent (3 x 525-550 V) [A]	30	25	37	31	45	40	58	47	65	59
	Continuous (3 x 525-600 V) [A]	18	22	22	27	27	34	34	41	41	52
	Intermittent (3 x 525-600 V) [A]	29	24	35	30	43	37	54	45	62	57
	Continuous kVA (550 V AC) [kVA]	18.1	21.9	21.9	26.7	26.7	34.3	34.3	41.0	41.0	51.4
	Continuous kVA (575 V AC) [kVA]	17.9	21.9	21.9	26.9	26.9	33.9	33.9	40.8	40.8	51.8
	Max. cable size IP20 (mains, motor, load share and brake) [AWG] [2] [mm²]	16(6)				35(2)					
	Max. cable size IP21, 55, 66 (mains, motor, load share and brake) [AWG] [2] [mm²]	16(6)				35(2)				90 (3/0)	
Max. input current											
	Continuous at 550 V [A]	17.2	20.9	20.9	25.4	25.4	32.7	32.7	39	39	49
	Intermittent at 550 V [A]	28	23	33	28	41	36	52	43	59	54
	Continuous at 575 V [A]	16	20	20	24	24	31	31	37	37	47
	Intermittent at 575 V [A]	26	22	32	27	39	34	50	41	56	52
	Max. pre-fuses[1] [A]	63		63		63		80		100	
	Environment										
	Estimated power loss at rated max. load [W] [4]	225		285		329		700		700	
	Weight, Unit Size IP21, 55 [kg]	23		23		27		27		27	
	Weight, Unit Size IP20 [kg]	12		12		23.5		23.5		23.5	
	Efficiency [4]	0.98		0.98		0.98		0.98		0.98	

5

5

Mains Supply 3 x 525 - 600 VAC									
AF-650 GP									
High/ Normal Load*		HO	NO	HO	NO	HO	NO	HO	NO
	Typical Shaft Output [kW]	37	45	45	55	55	75	75	90
	Typical Shaft Output [HP] at 575V	50	60	60	74	74	100	100	120
	Unit Size IP21, 55, 66	31	31	31		32		32	
	Unit Size IP20	33	33	33		34		34	
Output current									
	Continuous (3 x 525-550 V) [A]	54	65	65	87	87	105	105	137
	Intermittent (3 x 525-550 V) [A]	81	72	98	96	131	116	158	151
	Continuous (3 x 525-600 V) [A]	52	62	62	83	83	100	100	131
	Intermittent (3 x 525-600 V) [A]	78	68	93	91	125	110	150	144
	Continuous kVA (550 V AC) [kVA]	51.4	61.9	61.9	82.9	82.9	100.0	100.0	130.5
	Continuous kVA (575 V AC) [kVA]	51.8	61.7	61.7	82.7	82.7	99.6	99.6	130.5
	Max. cable size IP20 (mains, motor) [AWG] [2] [mm²]	50 (1)				95 (4/0)		150 (300mcm)	
	Max. cable size IP20 (load share, brake) [AWG] [2] [mm²]	50 (1)				95 (4/0)			
	Max. cable size IP21, 55, 66 (mains, motor, load share and brake) [AWG] [2] [mm²]	90 (3/0)				120 (4/0)			
Max. input current									
	Continuous at 550 V [A]	49	59	59	78.9	78.9	95.3	95.3	124.3
	Intermittent at 550 V [A]	74	65	89	87	118	105	143	137
	Continuous at 575 V [A]	47	56	56	75	75	91	91	119
	Intermittent at 575 V [A]	70	62	85	83	113	100	137	131
	Max. pre-fuses[1] [A]	125		160		250		250	
	Environment								
	Estimated power loss at rated max. load [W] [4]	850		1100		1400		1500	
	Weight, Unit Size IP20 [kg]	35		35		50		50	
	Weight, Unit Size IP21, 55 [kg]	45		45		65		65	
	Efficiency [4]	0.98		0.98		0.98		0.98	

Mains supply (L1, L2, L3):	
Supply voltage	200-240 V ±10%
Supply voltage	380-500 V ±10%
Supply voltage	525-690 V ±10%
Supply frequency	50/60 Hz
Max. imbalance temporary between mains phases	3.0 % of rated supply voltage
True Power Factor (λ)	≥ 0.9 nominal at rated load
Displacement Power Factor (cos ϕ)	near unity (> 0.98)
Switching on input supply L1, L2, L3 (power-ups) ≤ 7.5 kW	maximum 2 times/min.
Switching on input supply L1, L2, L3 (power-ups) 11-75 kW	maximum 1 time/min.
Switching on input supply L1, L2, L3 (power-ups) ≥ 90 kW	maximum 1 time/2 min.
Environment according to EN60664-1	overvoltage category III/pollution degree 2

The unit is suitable for use on a circuit capable of delivering not more than 100,000 RMS symmetrical Amperes, 240/500/600/ 690 V maximum.

5

Motor output (U, V, W):	
Output voltage	0 - 100% of supply voltage
Output frequency (0.25-75 kW)	0 - 1000 Hz
Output frequency (90-1000 kW)	0 - 800* Hz
Output frequency in Flux Mode	0 - 300 Hz
Switching on output	Unlimited
Ramp times	0.01 - 3600 sec.

** Voltage and power dependent*

Torque characteristics:	
Starting torque (Constant torque)	maximum 160% for 60 sec.*
Starting torque	maximum 180% up to 0.5 sec.*
Overload torque (Constant torque)	maximum 160% for 60 sec.*
Starting torque (Variable torque)	maximum 110% for 60 sec.*
Overload torque (Variable torque)	maximum 110% for 60 sec.

**Percentage relates to the nominal torque.*

Digital inputs:	
Programmable digital inputs	4 (6)
Terminal number	18, 19, 27[1], 29[1], 32, 33,
Logic	PNP or NPN
Voltage level	0 - 24 V DC
Voltage level, logic'0' PNP	< 5 V DC
Voltage level, logic'1' PNP	> 10 V DC
Voltage level, logic '0' NPN[2]	> 19 V DC
Voltage level, logic '1' NPN[2]	< 14 V DC
Maximum voltage on input	28 V DC
Pulse frequency range	0 - 110 kHz
(Duty cycle) Min. pulse width	4.5 ms
Input resistance, R_i	approx. 4 kΩ

Safe stop Terminal 37[2)] (Terminal 37 is fixed PNP logic):

Voltage level	0 - 24 V DC
Voltage level, logic'0' PNP	< 4 V DC
Voltage level, logic'1' PNP	>20 V DC
Nominal input current at 24 V	50 mA rms
Nominal input current at 20 V	60 mA rms
Input capacitance	400 nF

All digital inputs are galvanically isolated from the supply voltage (PELV) and other high-voltage terminals.

1) Terminals 27 and 29 can also be programmed as output.

2) Terminal 37 is only available in AF-650 GP. It can only be used as safe stop input. Terminal 37 is suitable for category 3 installations according to EN 954-1 (safe stop according to category 0 EN 60204-1) as required by the EU Machinery Directive 98/37/EC. Terminal 37 and the Safe Stop function are designed in conformance with EN 60204-1, EN 50178, EN 61800-2, EN 61800-3, and EN 954-1. For correct and safe use of the Safe Stop function follow the related information and instructions in the AF-650 GP Design Guide.

5

Analog inputs:

Number of analog inputs	2
Terminal number	53, 54
Modes	Voltage or current
Mode select	Switch S201 and switch S202
Voltage mode	Switch S201/switch S202 = OFF (U)
Voltage level	-10 to +10 V (scaleable)
Input resistance, R_i	approx. 10 kΩ
Max. voltage	± 20 V
Current mode	Switch S201/switch S202 = ON (I)
Current level	0/4 to 20 mA (scaleable)
Input resistance, R_i	approx. 200 Ω
Max. current	30 mA
Resolution for analog inputs	10 bit (+ sign)
Accuracy of analog inputs	Max. error 0.5% of full scale
Bandwidth	100 Hz

The analog inputs are galvanically isolated from the supply voltage (PELV) and other high-voltage terminals.

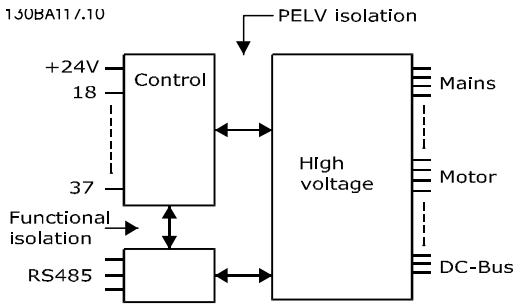

Pulse/encoder inputs:	
Programmable pulse/encoder inputs	2/1
Terminal number pulse/encoder	29, 33[1] / 32[2], 33[2]
Max. frequency at terminal 29, 32, 33	110 kHz (Push-pull driven)
Max. frequency at terminal 29, 32, 33	5 kHz (open collector)
Min. frequency at terminal 29, 32, 33	4 Hz
Voltage level	see section on Digital input
Maximum voltage on input	28 V DC
Input resistance, R_i	approx. 4 kΩ
Pulse input accuracy (0.1 - 1 kHz)	Max. error: 0.1% of full scale
Encoder input accuracy (1 - 110 kHz)	Max. error: 0.05 % of full scale

The pulse and encoder inputs (terminals 29, 32, 33) are galvanically isolated from the supply voltage (PELV) and other high-voltage terminals.

1) Pulse inputs are 29 and 33

2) Encoder inputs: 32 = A, and 33 = B

5

Digital output:	
Programmable digital/pulse outputs	2
Terminal number	27, 29 [1]
Voltage level at digital/frequency output	0 - 24 V
Max. output current (sink or source)	40 mA
Max. load at frequency output	1 kΩ
Max. capacitive load at frequency output	10 nF
Minimum output frequency at frequency output	0 Hz
Maximum output frequency at frequency output	32 kHz
Accuracy of frequency output	Max. error: 0.1 % of full scale
Resolution of frequency outputs	12 bit

1) Terminal 27 and 29 can also be programmed as input.

The digital output is galvanically isolated from the supply voltage (PELV) and other high-voltage terminals.

Analog output:	
Number of programmable analog outputs	1
Terminal number	42
Current range at analog output	0/4 - 20 mA
Max. load GND - analog output	500 Ω
Accuracy on analog output	Max. error: 0.5 % of full scale
Resolution on analog output	12 bit

The analog output is galvanically isolated from the supply voltage (PELV) and other high-voltage terminals.

Control card, 24 V DC output:	
Terminal number	12, 13
Output voltage	24 V +1, -3 V
Max. load	200 mA

The 24 V DC supply is galvanically isolated from the supply voltage (PELV), but has the same potential as the analog and digital inputs and outputs.

Control card, 10 V DC output:	
Terminal number	50
Output voltage	10.5 V ±0.5 V
Max. load	15 mA

The 10 V DC supply is galvanically isolated from the supply voltage (PELV) and other high-voltage terminals.

Control card, RS 485 serial communication:

Terminal number	68 (P,TX+, RX+), 69 (N,TX-, RX-)
Terminal number 61	Common for terminals 68 and 69

The RS 485 serial communication circuit is functionally separated from other central circuits and galvanically isolated from the supply voltage (PELV).

Control card, USB serial communication:

USB standard	1.1 (Full speed)
USB plug	USB type B "device" plug

Connection to PC is carried out via a standard host/device USB cable.

The USB connection is galvanically isolated from the supply voltage (PELV) and other high-voltage terminals.

The USB ground connection is not galvanically isolated from protection earth. Use only an isolated laptop as PC connection to the USB connector on the frequency converter.

Relay outputs:

Programmable relay outputs	2 Form C
Relay 01 Terminal number	1-3 (break), 1-2 (make)
Max. terminal load (AC-1)[1] on 1-3 (NC), 1-2 (NO) (Resistive load)	240 V AC, 2 A
Max. terminal load (AC-15)[1] (Inductive load @ cosϕ 0.4)	240 V AC, 0.2 A
Max. terminal load (DC-1)[1] on 1-2 (NO), 1-3 (NC) (Resistive load)	60 V DC, 1A
Max. terminal load (DC-13)[1] (Inductive load)	24 V DC, 0.1A
Relay 02 Terminal number	4-6 (break), 4-5 (make)
Max. terminal load (AC-1)[1] on 4-5 (NO) (Resistive load)[2][3] Overvoltage cat. II	400 V AC, 2 A
Max. terminal load (AC-15)[1] on 4-5 (NO) (Inductive load @ cosϕ 0.4)	240 V AC, 0.2 A
Max. terminal load (DC-1)[1] on 4-5 (NO) (Resistive load)	80 V DC, 2 A
Max. terminal load (DC-13)[1] on 4-5 (NO) (Inductive load)	24 V DC, 0.1A
Max. terminal load (AC-1)[1] on 4-6 (NC) (Resistive load)	240 V AC, 2 A
Max. terminal load (AC-15)[1] on 4-6 (NC) (Inductive load @ cosϕ 0.4)	240 V AC, 0.2A
Max. terminal load (DC-1)[1] on 4-6 (NC) (Resistive load)	50 V DC, 2 A
Max. terminal load (DC-13)[1] on 4-6 (NC) (Inductive load)	24 V DC, 0.1 A
Min. terminal load on 1-3 (NC), 1-2 (NO), 4-6 (NC), 4-5 (NO)	24 V DC 10 mA, 24 V AC 20 mA
Environment according to EN 60664-1	overvoltage category III/pollution degree 2

1) IEC 60947 part 4 and 5

The relay contacts are galvanically isolated from the rest of the circuit by reinforced isolation (PELV).

2) Overvoltage Category II

3) UL applications 300 V AC 2A

Cable lengths and cross sections for control cables*:

Max. motor cable length, screened	150 m
Max. motor cable length, unscreened	300 m
Maximum cross section to control terminals, flexible/ rigid wire without cable end sleeves	1.5 mm^2/16 AWG
Maximum cross section to control terminals, flexible wire with cable end sleeves	1 mm^2/18 AWG
Maximum cross section to control terminals, flexible wire with cable end sleeves with collar	0.5 mm^2/20 AWG
Minimum cross section to control terminals	0.25 mm^2/ 24 AWG

** Power cables, see tables in section "Electrical Data" of the AF-650 GP Design Guide*

Control card performance:

Scan interval	AF-650 GP: 1 ms

Control characteristics:

Resolution of output frequency at 0 - 1000 Hz	+/- 0.003 Hz
Repeat accuracy of *Precise start/stop* (terminals 18, 19)	≤± 0.1 msec
System response time (terminals 18, 19, 27, 29, 32, 33)	≤ 2 ms
Speed control range (open loop)	1:100 of synchronous speed
Speed control range (closed loop)	1:1000 of synchronous speed
Speed accuracy (open loop)	30 - 4000 rpm: error ±8 rpm
Speed accuracy (closed loop), depending on resolution of feedback device	0 - 6000 rpm: error ±0.15 rpm

All control characteristics are based on a 4-pole asynchronous motor

5

Surroundings:

Enclosure	IP20 Open Chassis, Nema 1 with field installed kit, Nema 12, and Nema 4
Vibration test	1.0 g
Max. relative humidity	5% - 93%(IEC 721-3-3; Class 3K3 (non-condensing) during operation
Aggressive environment (IEC 60068-2-43) H_2S test	class Kd
Ambient temperature	Max. 50 °C

1) Only for ≤ 3.7 kW (200 - 240 V), ≤ 7.5 kW (400 - 480/ 500 V)

2) As enclosure kit for ≤ 3.7 kW (200 - 240 V), ≤ 7.5 kW (400 - 480/ 500 V)

3) Derating for high ambient temperature, see special conditions in the Design Guide

Minimum ambient temperature during full-scale operation	0 °C
Minimum ambient temperature at reduced performance	- 10 °C
Temperature during storage/transport	-25 - +65/70 °C
Maximum altitude above sea level without derating	1000 m

Derating for high altitude, see special conditions in the Design Guide

EMC standards, Emission	EN 61800-3, EN 61000-6-3/4, EN 55011
EMC standards, Immunity	EN 61800-3, EN 61000-6-1/2, EN 61000-4-2, EN 61000-4-3, EN 61000-4-4, EN 61000-4-5, EN 61000-4-6

See section on special conditions in the Design Guide. Please see www.geelectrical.com/drives for more information.

Protection and Features:

- Electronic thermal motor protection against overload.
- Temperature monitoring of the heatsink ensures that the frequency converter trips if the temperature reaches a predefined level. An overload temperature cannot be reset until the temperature of the heatsink is below the values stated in the tables on the following pages (Guideline - these temperatures may vary for different power sizes, Unit Sizes, enclosure ratings etc.).
- The frequency converter is protected against short-circuits on motor terminals U, V, W.
- If a mains phase is missing, the frequency converter trips or issues a warning (depending on the load).
- Monitoring of the intermediate circuit voltage ensures that the frequency converter trips if the intermediate circuit voltage is too low or too high.
- The frequency converter constantly checks for critical levels of internal temperature, load current, high voltage on the intermediate circuit and low motor speeds. As a response to a critical level, the frequency converter can adjust the switching frequency and/ or change the switching pattern in order to ensure the performance of the drive.

6 Troubleshooting

6.1.1 Warnings/Alarm Messages

A warning or an alarm is signalled by the relevant LED on the front of the frequency converter and indicated by a code on the display.

A warning remains active until its cause is no longer present. Under certain circumstances operation of the motor may still be continued. Warning messages may be critical, but are not necessarily so.

In the event of an alarm, the frequency converter will have tripped. Alarms must be reset to restart operation once their cause has been rectified.

This may be done in three ways:

1. By using the [RESET] control button on the Keypad control panel.
2. Via a digital input with the "Reset" function.
3. Via serial communication/optional network.

NB!
After a manual reset using the [RESET] button on the Keypad, the [AUTO] button must be pressed to restart the motor.

If an alarm cannot be reset, the reason may be that its cause has not been rectified, or the alarm is trip-locked (see also table on following page).

Alarms that are trip-locked offer additional protection, meaning that the mains supply must be switched off before the alarm can be reset. After being switched back on, the frequency converter is no longer blocked and may be reset as described above once the cause has been rectified.

Alarms that are not trip-locked can also be reset using the automatic reset function in par. H-04 Auto-Reset *(Times)* (Warning: automatic wake-up is possible!)

If a warning and alarm is marked against a code in the table on the following page, this means that either a warning occurs before an alarm, or else that you can specify whether it is a warning or an alarm that is to be displayed for a given fault.

This is possible, for instance, in par. F-10 *Electronic Overload*. After an alarm or trip, the motor carries on coasting, and the alarm and warning flash. Once the problem has been rectified, only the alarm continues flashing until the frequency converter is reset.

No.	Description	Warning	Alarm/Trip	Alarm/Trip Lock	Parameter Reference
1	10 Volts low	X			
2	Live zero error	(X)	(X)		par. AN-01 Live *Zero Time-out Function*
3	No motor	(X)			par. H-80 Function *at Stop*
4	Mains phase loss	(X)	(X)	(X)	par. SP-12 Function *at Line Imbalance*
5	DC link voltage high	X			
6	DC link voltage low	X			
7	DC over-voltage	X	X		
8	DC under voltage	X	X		
9	Inverter overloaded	X	X		
10	Motor Electronic OL over temperature	(X)	(X)		par. F-10 *Electronic Over-load*
11	Motor thermistor over temperature	(X)	(X)		par. F-10 *Electronic Over-load*
12	Torque limit	X	X		
13	Over Current	X	X	X	
14	Earth Fault	X	X	X	
15	Hardware mismatch		X	X	
16	Short Circuit		X	X	
17	Control word time-out	(X)	(X)		par. O-04 Control *Word Timeout Function*
22	Hoist Mech. Brake				
23	Internal Fan Fault	X			
24	External Fan Fault	X			par. SP-53 Fan *Monitor*
25	Brake resistor short-circuited	X			
26	Brake resistor power limit	(X)	(X)		par. B-13 Braking *Thermal Overload*
27	Brake chopper short-circuited	X	X		
28	Brake check	(X)	(X)		par. B-15 Brake *Check*
29	Heatsink temp	X	X	X	
30	Motor phase U missing	(X)	(X)	(X)	par. H-78 Missing *Motor Phase Function*
31	Motor phase V missing	(X)	(X)	(X)	par. H-78 Missing *Motor Phase Function*
32	Motor phase W missing	(X)	(X)	(X)	par. H-78 Missing *Motor Phase Function*
33	Inrush Fault		X	X	
34	Network communication fault	X	X		
36	Mains failure	X	X		
38	Internal Fault		X	X	
39	Heatsink sensor		X	X	
40	Overload of Digital Output Terminal 27	(X)			par. E-00 Digital *I/O Mode*, par. E-51 Terminal *27 Mode*
41	Overload of Digital Output Terminal 29	(X)			par. E-00 Digital *I/O Mode*, par. E-52 Terminal *29 Mode*
42	Overload of Digital Output On X30/6	(X)			par. E-56 Term *X30/6 Digi Out (OPCGPIO)*
42	Overload of Digital Output On X30/7	(X)			par. E-57 Term *X30/7 Digi Out (OPCGPIO)*
46	Pwr. card supply		X	X	
47	24 V supply low	X	X	X	
48	1.8 V supply low		X	X	
49	Speed limit	X			
50	Auto Tune calibration failed		X		
51	Auto Tune check U_{nom} and I_{nom}		X		
52	Auto Tune low I_{nom}		X		
53	Auto Tune motor too big		X		

Table 6.1: Alarm/Warning code list

No.	Description	Warning	Alarm/Trip	Alarm/Trip Lock	Parameter Reference
54	Auto Tune motor too small		X		
55	Auto Tune parameter out of range		X		
56	Auto Tune interrupted by user		X		
57	Auto Tune time-out		X		
58	Auto Tune internal fault	X	X		
59	Current limit	X			
61	Tracking Error	(X)	(X)		par. H-20 Motor *Feedback Loss Function*
62	Output Frequency at Maximum Limit	X			
63	Mechanical Brake Low		(X)		par. B-20 Release *Brake Current*
64	Voltage Limit	X			
65	Control Board Over-temperature	X	X	X	
66	Heat sink Temperature Low	X			
67	Option Module Configuration has Changed		X		
68	Safe Stop	(X)	(X)[1)]		par. E-07 Terminal *37 Safe Stop*
69	Pwr. Card Temp		X	X	
70	Illegal Drive configuration			X	
71	Safe Stop	X	X[1)]		par. E-07 Terminal *37 Safe Stop*
72	Dangerous Failure			X[1)]	par. E-07 Terminal *37 Safe Stop*
73	Safe Stop Auto Restart				
77	Reduced power mode	X			par. SP-59 Actual *Number of Inverter Units*
79	Illegal PS config		X	X	
80	Drive Restored to Factory Settings		X		
81	CSIV corrupt				
82	CSIV parameter error				
85	Profibus/Profisafe Error				
90	Encoder Loss	(X)	(X)		par. EC-61 Feedback *Signal Monitoring*
91	Analog input 54 wrong settings			X	S202
243	Brake IGBT	X	X		
244	Heatsink temp	X	X	X	
245	Heatsink sensor		X	X	
246	Pwr.card supply		X	X	
247	Pwr.card temp		X	X	
248	Illegal PS config		X	X	
250	New spare part			X	
251	New Model Number		X	X	

Table 6.2: Alarm/Warning code list

(X) Dependent on parameter

1) Can not be Auto reset via par. H-04 Auto-Reset *(Times)*

A trip is the action when an alarm has appeared. The trip will coast the motor and can be reset by pressing the reset button or make a reset by a digital input (Par. E-1# [1]). The origin event that caused an alarm cannot damage the frequency converter or cause dangerous conditions. A trip lock is an action when an alarm occurs, which may cause damage to frequency converter or connected parts. A Trip Lock situation can only be reset by a power cycling.

LED indication

Warning	yellow
Alarm	flashing red
Trip locked	yellow and red

Alarm Word Extended Status Word

Bit	Hex	Dec	Alarm Word	Alarm Word 2	Warning Word	Warning Word 2	Extended Status Word
0	00000001	1	Brake Check	ServiceTrip, Read/Write	Brake Check		Ramping
1	00000002	2	Pwr. Card Temp	ServiceTrip, (reserved)	Pwr. Card Temp		Auto Tune Running
2	00000004	4	Earth Fault	ServiceTrip, Typecode/Sparepart	Earth Fault		Start CW/CCW
3	00000008	8	Ctrl.Card Temp	ServiceTrip, (reserved)	Ctrl.Card Temp		Slow Down
4	00000010	16	Ctrl. Word TO	ServiceTrip, (reserved)	Ctrl. Word TO		Catch Up
5	00000020	32	Over Current		Over Current		Feedback High
6	00000040	64	Torque Limit		Torque Limit		Feedback Low
7	00000080	128	Motor Th Over		Motor Th Over		Output Current High
8	00000100	256	Motor Electronic OL Over		Motor Electronic OL Over		Output Current Low
9	00000200	512	Drive Overld.		Drive Overld.		Output Freq High
10	00000400	1024	DC under Volt		DC under Volt		Output Freq Low
11	00000800	2048	DC over Volt		DC over Volt		Brake Check OK
12	00001000	4096	Short Circuit		DC Voltage Low		Braking Max
13	00002000	8192	Inrush Fault		DC Voltage High		Braking
14	00004000	16384	Mains ph. Loss		Mains ph. Loss		Out of Speed Range
15	00008000	32768	Auto Tune Not OK		No Motor		OVC Active
16	00010000	65536	Live Zero Error		Live Zero Error		AC Brake
17	00020000	131072	Internal Fault	KTY error	10V Low	KTY Warn	Password Timelock
18	00040000	262144	Brake Overload	Fans error	Brake Overload	Fans Warn	Password Protection
19	00080000	524288	U phase Loss	ECB error	Brake Resistor	ECB Warn	
20	00100000	1048576	V phase Loss		Brake IGBT		
21	00200000	2097152	W phase Loss		Speed Limit		
22	00400000	4194304	Network Fault		Network Fault		Unused
23	00800000	8388608	24 V Supply Low		24V Supply Low		Unused
24	01000000	16777216	Mains Failure		Mains Failure		Unused
25	02000000	33554432	1.8V Supply Low		Current Limit		Unused
26	04000000	67108864	Brake Resistor		Low Temp		Unused
27	08000000	134217728	Brake IGBT		Voltage Limit		Unused
28	10000000	268435456	Option Change		Encoder loss		Unused
29	20000000	536870912	Drive Restored to factory settings		Output freq. lim.		Unused
30	40000000	1073741824	Safe Stop (A68)	Safe Stop (A71)	Safe Stop (W68)	Safe Stop (W71)	Unused
31	80000000	2147483648	Mech. brake low	Dangerous Failure (A72)	Extended Status Word		Unused

Table 6.3: Description of Alarm Word, Warning Word and Extended Status Word

The alarm words, warning words and extended status words can be read out via serial bus or optional network for diagnose. See alsopar. DR-94 Ext. *Status Word*.

WARNING 1, 10 Volts low:

The 10 V voltage from terminal 50 on the control card is below 10 V.

Remove some of the load from terminal 50, as the 10 V supply is overloaded. Max. 15 mA or minimum 590 Ω.

WARNING/ALARM 2, Live zero error:

The signal on terminal 53 or 54 is less than 50% of the value set in par. AN-10 Terminal *53 Low Voltage*, par. AN-12 Terminal *53 Low Current*, par. AN-20 Terminal *54 Low Voltage*, or par. AN-22 Terminal *54 Low Current* respectively.

WARNING/ALARM 3, No motor:

No motor has been connected to the output of the frequency converter.

WARNING/ALARM 4, Mains phase loss:

A phase is missing on the supply side, or the mains voltage imbalance is too high.

This message also appears in case of a fault in the input rectifier on the frequency converter.

Check the supply voltage and supply currents to the frequency converter.

WARNING 5, DC link voltage high:

The intermediate circuit voltage (DC) is higher than the overvoltage limit of the control system. The frequency converter is still active.

WARNING 6, DC link voltage low

The intermediate circuit voltage (DC) is below the undervoltage limit of the control system. The frequency converter is still active.

WARNING/ALARM 7, DC over voltage:

If the intermediate circuit voltage exceeds the limit, the frequency converter trips after a time.

Possible corrections:

Connect a brake resistor

Extend the ramp time

Activate functions in par. B-10 Brake *Function*

Increase par. SP-26 Trip *Delay at Drive Fault*

Alarm/warning limits:

	3 x 200 - 240 V [VDC]	3 x 380 - 500 V [VDC]	3 x 525 - 600 V [VDC]
Undervoltage	185	373	532
Voltage warning low	205	410	585
Voltage warning high (w/o brake - w/ brake)	390/405	810/840	943/965
Overvoltage	410	855	975

The voltages stated are the intermediate circuit voltage of the frequency converter with a tolerance of ± 5 %. The corresponding mains voltage is the intermediate circuit voltage (DC-link) divided by 1.35

WARNING/ALARM 8, DC under voltage:

If the intermediate circuit voltage (DC) drops below the "voltage warning low" limit (see table above), the frequency converter checks if 24 V backup supply is connected.

If no 24 V backup supply is connected, the frequency converter trips after a given time depending on the unit.

To check whether the supply voltage matches the frequency converter, see *General Specifications*.

WARNING/ALARM 9, Drive overloaded:

The frequency converter is about to cut out because of an overload (too high current for too long). The counter for electronic, thermal inverter protection gives a warning at 98% and trips at 100%, while giving an alarm. You cannot reset the frequency converter until the counter is below 90%.

The fault is that the frequency converter is overloaded by more than 100% for too long.

WARNING/ALARM 10, Motor electronic overload over temperature:

According to the electronic thermal protection, the motor is too hot. You can choose if you want the frequency converter to give a warning or an alarm when the counter reaches 100% in par. F-10 *Electronic Overload*. The fault is that the motor is overloaded by more than 100% for too long. Check that the motor par. P-03 Motor *Current* is set correctly.

WARNING/ALARM 11, Motor thermistor over temp:

The thermistor or the thermistor connection is disconnected. You can choose if you want the frequency converter to give a warning or an alarm when the counter reaches 100% in par. F-10 *Electronic Overload*. Check that the thermistor is connected correctly between terminal 53 or 54 (analog voltage input) and terminal 50 (+ 10 V supply), or between terminal 18 or 19 (digital input PNP only) and terminal 50. If aKTY sensoris used, check for correct connection between terminal 54 and 55.

WARNING/ALARM 12, Torque limit:

The torque is higher than the value in par. F-40 Torque *Limiter (Driving)* (in motor operation) or the torque is higher than the value in par. F-41 Torque *Limiter (Braking)* (in regenerative operation).

WARNING/ALARM 13, Over Current:

The inverter peak current limit (approx. 200% of the rated current) is exceeded. The warning will last approx. 8-12 sec., then the frequency converter trips and issues an alarm. Turn off the frequency converter and check if the motor shaft can be turned and if the motor size matches the frequency converter.

If extended mechanical brake control is selected, trip can be reset externally.

ALARM 14, Earth fault:

There is a discharge from the output phases to earth, either in the cable between the frequency converter and the motor or in the motor itself.

Turn off the frequency converter and remove the earth fault.

ALARM 15, Incomplete hardware:

A fitted option is not handled by the present control board (hardware or software).

ALARM 16, Short-circuit

There is short-circuiting in the motor or on the motor terminals.

Turn off the frequency converter and remove the short-circuit.

WARNING/ALARM 17, Control word timeout:

There is no communication to the frequency converter.

The warning will only be active when par. O-04 Control *Word Timeout Function* is NOT set to *OFF*.

If par. O-04 Control *Word Timeout Function* is set to *Stop* and *Trip*, a warning appears and the frequency converter ramps down until it trips, while giving an alarm.

par. O-03 Control *Word Timeout Time* could possibly be increased.

WARNING 23, Internal fan fault:

The fan warning function is an extra protection function that checks if the fan is running / mounted. The fan warning can be disabled in par. SP-53 Fan *Monitor* (set to [0] Disabled).

WARNING 24, External fan fault:

The fan warning function is an extra protection function that checks if the fan is running / mounted. The fan warning can be disabled in par. SP-53 Fan *Monitor* (set to [0] Disabled).

WARNING 25, Brake resistor short-circuited:

The brake resistor is monitored during operation. If it short-circuits, the brake function is disconnected and the warning appears. The frequency converter still works, but without the brake function. Turn off the frequency converter and replace the brake resistor (see par. B-15 Brake *Check*).

ALARM/WARNING 26, Brake resistor power limit:

The power transmitted to the brake resistor is calculated as a percentage, as a mean value over the last 120 s, on the basis of the resistance value of the brake resistor (par. B-11 Brake *Resistor (ohm)*) and the intermediate circuit voltage. The warning is active when the dissipated braking power is higher than 90%. If *Trip* [2] has been selected in par. B-13 Braking *Thermal Overload*, the frequency converter cuts out and issues this alarm, when the dissipated braking power is higher than 100%.

ALARM/ WARNING 27, Brake chopper fault:

The brake transistor is monitored during operation and if it short-circuits, the brake function disconnects and the warning comes up. The frequency converter is still able to run, but since the brake transistor has short-circuited, substantial power is transmitted to the brake resistor, even if it is inactive.

Turn off the frequency converter and remove the brake resistor.

This alarm/ warning could also occur should the brake resistor overheat. Terminal 104 to 106 are available as brake resistor. Klixon inputs, see section Brake Resistor Temperature Switch.

Warning: There is a risk of substantial power being transmitted to the brake resistor if the brake transistor is short-circuited.

ALARM/WARNING 28, Brake check failed:

Brake resistor fault: the brake resistor is not connected/working.

ALARM 29, Drive over temperature:

If the drive type is IP20 Open Chassis, IP20 with Nema 1 kit, or Nema 1 the cut-out temperature of the heat-sink is 95 °C ±5 °C. The temperature fault cannot be reset, until the temperature of the heatsink is below 70 °C ±5 °C.

The fault could be:

- Ambient temperature too high
- Too long motor cable

ALARM 30, Motor phase U missing:

Motor phase U between the frequency converter and the the motor is missing. Turn off the frequency converter and check motor phase U.

ALARM 31, Motor phase V missing:

Motor phase V between the frequency converter and the motor is missing. Turn off the frequency converter and check motor phase V.

ALARM 32, Motor phase W missing:

Motor phase W between the frequency converter and the motor is missing. Turn off the frequency converter and check motor phase W.

ALARM 33, Inrush fault:

Too many power ups have occured within a short time period. See the chapter *General Specifications* for the allowed number of power ups within one minute.

WARNING/ALARM 34, Network communication fault:

The network option card is not working correctly. Please check parameters associated with the module and make sure module is properly inserted in Slot A of the drive.

WARNING/ALARM 36, Mains failure:

This warning/alarm is only active if the supply voltage to the frequency converter is lost and par. SP-10 Line *failure* is NOT set to OFF. Possible correction: check the fuses/circuit breaker connected to the frequency converter

ALARM 38, Internal fault:

Internal drive fault. Please contact your GE supplier. Some typical alarm messages:

0	The serial port cannot be initialized. Serious hardware failure
256	The power EEPROM data is defected or outdated.
512	The control board EEPROM data is defected or outdated.
513	Communication time out Reading EEPROM data
514	Communication time out Reading EEPROM data
515	The Application Orientated Control cannot recognize the EEPROM data
516	Cannot write write to the EEPROM because a write command is on progress
517	The write command is under time out
518	Failure in the EEPROM
519	Missing or invalid BarCode data in EEPROM 1024 – 1279 CAN telegram cannot be sent. (1027 indicate a possible hardware failure)
1281	Digital Signal Processor flash time-out
1282	Power micro software version mismatch
1283	Power EEPROM data version mismatch
1284	Cannot read Digital Signal Processor software version
1299	Option SW in slot A is outdated
1300	Option SW in slot B is outdated
1311	Option SW in slot C0 is outdated
1312	Option SW in slot C1 is outdated
1315	Option SW in slot A is not supported (not allowed)
1316	Option SW in slot B is not supported (not allowed)
1317	Option SW in slot C0 is not supported (not allowed)
1318	Option SW in slot C1 is not supported (not allowed)
1536	An exception in the Application Orientated Control is registered. Debug information written in Keypad
1792	DSP watchdog is active. Debugging of power part data Motor Orientated Control data not transferred correctly
2049	Power data restarted
2315	Missing SW version from power unit
2816	Stack overflow Control board module
2817	Scheduler slow tasks
2818	Fast tasks
2819	Parameter thread
2820	Keypad stack overflow
2821	Serial port overflow
2822	USB port overflow
3072-5122	Parameter value is outside its limits. Perform a initialization. Parameter number causing the alarm: Subtract the code from 3072. Ex Error code 3238: 3238-3072 = 166 is outside the limit
5123	Option in slot A: Hardware incompatible with Control board hardware
5124	Option in slot B: Hardware incompatible with Control board hardware
5125	Option in slot C0: Hardware incompatible with Control board hardware
5126	Option in slot C1: Hardware incompatible with Control board hardware
5376-6231	Out of memory

WARNING 40, Overload of Digital Output Terminal 27

Check the load connected to terminal 27 or remove short-circuit connection. Check par. E-00 Digital *I/O Mode* and par. E-51 Terminal *27 Mode*.

WARNING 41, Overload of Digital Output Terminal 29:

Check the load connected to terminal 29 or remove short-circuit connection. Check par. E-00 Digital *I/O Mode* and par. E-52 Terminal *29 Mode*.

WARNING 42, Overload of Digital Output On X30/6 :

Check the load connected to X30/6 or remove short-circuit connection. Check par. E-56 Term *X30/6 Digi Out (OPCGPIO)*.

WARNING 42, Overload of Digital Output On X30/7 :

Check the load connected to X30/7 or remove short-circuit connection. Check par. E-57 Term *X30/7 Digi Out (OPCGPIO)*.

WARNING 47, 24 V supply low:

The external 24 V DC backup power supply may be overloaded, otherwise Contact your GE supplier.

WARNING 48, 1.8 V supply low:

Contact your GE supplier.

WARNING 49, Speed limit:

The speed is not within the specified range in par. F-18 *Motor Speed Low Limit [RPM]* and par. F-17 *Motor Speed High Limit [RPM]*.

ALARM 50, Auto Tune calibration failed:

Contact your GE supplier.

ALARM 51, Auto Tune check Unom and Inom:

The setting of motor voltage, motor current, and motor power are set set correctly. Please check parameters (P-##).

ALARM 52, Auto Tune low Inom:

The motor current is too low. Check the settings.

ALARM 53, Auto Tune motor too big:

The motor is too big for the Auto Tune to be carried out.

ALARM 54, Auto Tune motor too small:

The motor is too small for the Auto Tune to be carried out.

ALARM 55, Auto Tune par. out of range:

The motor parameter values set for the motor are outside acceptable range.

ALARM 56, Auto Tune interrupted by user:

The Auto Tune has been interrupted by the user.

ALARM 57, Auto Tune timeout:

Try to start the Auto Tune again a number of times, until the Auto Tune is carried out. Please note that repeated runs may heat the motor to a level where the resistance Rs and Rr are increased. In most cases, however, this is not critical.

ALARM 58, Auto Tune internal fault:
Contact your GE supplier.

WARNING 59, Current limit:
The current is higher than the value in par. F-43 Current *Limit*.

WARNING 61, Tracking Error:
An error has been detected between calculated speed and speed measurement from feedback device. The function Warning/Alarm/Disabling setting is in par. H-20 Motor *Feedback Loss Function*. Accepted error setting in par. H-21 Motor *Feedback Speed Error* and the allowed time the error occur setting in par. H-22 Motor *Feedback Loss Timeout*. During a commissioning procedure the function may be effective.

WARNING 62, Output Frequency at Maximum Limit:
The output frequency is higher than the value set in par. F-03 Max *Output Frequency 1*

ALARM 63, Mechanical Brake Low:
The actual motor current has not exceeded the "release brake" current within the "Start delay" time window.

WARNING 64, Voltage Limit:
The load and speed combination demands a motor voltage higher than the actual DC link voltage.

WARNING/ALARM/TRIP 65, Control Card Over Temperature:
Control card over temperature: The cut-out temperature of the control card is 80° C.

WARNING 66, Heatsink Temperature Low:
The heat sink temperature is measured as 0° C. This could indicate that the temperature sensor is defect and thus the fan speed is increased to the maximum in case the power part or control card is very hot.

ALARM 67, Option Module Configuration has Changed:
One or more options modules have either been added or removed since the last power down.

ALARM 68, Safe Stop:
Safe Stop has been activated. To resume normal operation, apply 24 V DC to terminal # 37,, then send a reset signal (via Bus, Digital I/O, or by pressing [RESET]).

WARNING 68, Safe Stop:
Safe Stop has been activated. Normal operation is resumed when Safe Stop is disabled. Warning: Automatic Restart!

ALARM 70, Illegal Drive Configuration:
Actual combination of control board and power board is illegal.

ALARM 71, 1 Safe Stop:
Safe Stop has been activated from external source. Normal operation can be resumed when 24V dc is applied to terminal # 37. When that happens, a reset signal must be is be sent (via Bus, Digital I/O, or by pressing [RESET]).

WARNING 71, Safe Stop:
Safe Stop has been activated from external source. Normal operation can be resumed when 24V dc is applied to terminal # 37.. Warning: Automatic Restart.

ALARM 72, Dangerous Failure:
Safe Stop with Trip Lock. Unexpected signal levels on Safe Stop.

ALARM 80, Drive Restored to Factory Settings:
Parameter settings are restored to factory settings after a manual (three-finger) reset.

ALARM 90, Encoder loss:
Check the connection to encoder option and eventually replace the OPCENC or MCB 103.

ALARM 91, Analogue Input 54 Wrong Settings:
Switch S202 has to be set in position OFF (voltage input) when a KTY sensor is connected to analogue input terminal 54.

ALARM 250, New Spare Part:
The power or Switch Mode Power Supply has been exchanged. The frequency converter model number must be restored in the EEPROM. Remember to select 'Save to EEPROM' to complete.

ALARM 251, New Model Number:
The Frequency Converter has got a new model number.

Index

A

Abbreviations 4
Accel Time 1 40
Access To Control Terminals 25
Alarm Messages 83
Analog Inputs 78
Analog Output 79
Approvals 3
Auto Tune 32, 44

B

Base Frequency 39
Brake Control 87

C

Cable Lengths And Cross Sections 80
Cable Lengths And Cross Sections-continued 81
Connection To Mains 17
Control Cables 30
Control Cables 29
Control Card Performance 81
Control Card, +10 V Dc Output 79
Control Card, 24 V Dc Output 79
Control Card, Rs 485 Serial Communication 79
Control Card, Usb Serial Communication 80
Control Characteristics 81
Control Terminals 26
Cooling 41
Cooling Conditions 14

D

Dc Backup 3
Dc Link 86
Dct 10 3
Decel Time 1 41
Decoupling Plate 19
Devicenet 3
Digital Inputs: 77
Digital Output 79
Disposal Instruction 5

E

Electrical Installation 26, 29
Electrical Terminals 29
Electronic Overload 87
Electronic Overload 41

F

Frequency Setting 1 40
Fuses 22

G

General Warning 6
Graphical Display 37

I

Intermediate Circuit 86
Ip21 / Nema 1 Kit 3

K

Kty Sensor 87

L

Language 39
Language Package 1 0 , 0
Language Package 2 0
Language Package 3 0
Language Package 4 0
Leakage Current 6
Leds 37

M

Main Reactance 0
Mains Supply 69, 74, 75, 76
Mains Supply (l1, L2, L3) 77
Mechanical Brake Control 34
Mechanical Dimensions 10
Mechanical Mounting 14
Motor Connection 19
Motor Current 40
Motor Name Plate 32
Motor Output 77
Motor Power [hp] 39
Motor Power [kw] 39
Motor Protection 41, 81
Motor Rated Voltage 39
Motor Speed Unit 39
Motor Thermal Protection 34

N

Name Plate Data 32
Non Ul Compliance 22

O

Output Performance (u, V, W) 77

P

Panel Through Mounting 15
Parallel Connection Of Motors 34
Potentiometer Reference 28
Profibus 3
Protection 22
Protection And Features 81
Pulse Start/stop 27
Pulse/encoder Inputs 79

R

Reference Site, 3-13 40
Relay Outputs 80
Removal Of Knockouts For Extra Cables 16
Repair Work 7
Residual Current Device 6

S

Safe Stop 7
Safety Precautions 6
Screened/armoured 30
Serial Communication 80
Speed Up/down 28
Start/stop 27

Stator Leakage Reactance 0
Status Messages 37
Surroundings 81
Switches S201, S202, And S801 31
Symbols 4

T

Thermistor 41
Torque Characteristics 77

U

Unintended Start 7

V

Voltage Level 77
Voltage Reference Via A Potentiometer 28

W

Warnings 83

The instructions do not purport to cover all details or variations in equipment nor to provide for every possible contingency to be met in connection with installation, operation or maintenance. Should further information be desired or should particular problems arise which are not covered sufficiently for the purchaser's purposes, the matter should be referred to the GE company.

AF-650 GP is a trademark of the General Electric Company.

GE Consumer & Industrial
41 Woodford Avenue
Plainville, CT 06062

www.geelectrical.com/drives

imagination at work

130R0356 MG34F102 DET-607

Specification Section 16410

Safety Switches

EXB-NFD, EXB-FDS SERIES • DISTRIBUTION EQUIPMENT
DISCONNECT SWITCHES • 3 POLE/NON-FUSIBLE & FUSIBLE

Class I, Div. 1 & 2, Groups B,C,D
Class I, Zones 1 & 2, Groups IIB+ H2, IIA
Class II, Div. 1 & 2, Groups E,F,G
Class III
NEMA 3, 4, 4X, 7(B,C,D) 9(E,F,G)

#UL698& #UL1203 - Explosion Proof and Dust Ignition Proof Electrical Equipment. Files #E83969 & E12379

#C22.2 No. 30-M1986 - Explosion Proof Enclosure for use in Class I Hazardous Locations. File #LR11716

FEATURES-SPECIFICATIONS

Applications
EXP-NFD and EXB-FDS Series hinged cover disconnect switches are used:

- In locations made hazardous due to the presence of flammable gasses or vapors or ignitable dusts, fibers and flyings.
- Outdoors or indoors in damp, wet and dirty locations, or in areas where frequent washdowns, heavy rain or water spray routinely occurs.
- Use as motor circuit disconnect and to provide short circuit protection (fused version) of lighting and power circuits.

Features
- Copper-free aluminum construction, high strength, lighter in weight and corrosion resistant.
- Fewer cover bolts (no corner bolts required) reduces installation and maintenance time. Cover bolts are stainless steel.
- Gasketed flange with O-ring located in side bolt circle to seal out moisture.
- Stainless steel hinges are standard.
- Switch operating handle of copper-free aluminum can be padlocked, with up to 3 locks, in either the "ON" or "OFF" position.
- Ductile mounting lugs adjust to irregular mounting surfaces.
- Bodies have top and bottom drilled and tapped conduit entrances for power and drain/breather.

EXB-NFD NON FUSED DISCONNECT SWITCHES

CATALOG NUMBER	SWITCH RATING	TYPE	CONDUITS top/bot.	WIRE SIZE
EXB-NFD-0303P	30	3 Pole	(1) 2" (1) 1/2"	#14-4
EXB-NFD-0306P	30	6 Pole	(2) 2" (1) 1/2"	#14-4
EXB-NFD-0303PDT	30	3P Double Throw	(2) 2" (1) 1/2"	#14-4
EXB-NFD-0603P	60	3 Pole	(1) 2" (1) 1/2"	#14-4
EXB-NFD-0606P	60	6 Pole	(2) 2" (1) 1/2"	#14-4
EXB-NFD-0603PDT	60	3P Double Throw	(2) 2" (1) 1/2"	#14-4
EXB-NFD-1003P	100	3 Pole	(1) 2" (1) 1/2"	#8- 1/0
EXB-NFD-1006P	100	6 Pole	(2) 2" (1) 1/2"	#8-1/0
EXB-NFD-1003PDT	100	3P Double Throw	(2) 2" (1) 1/2"	#8-1/0
EXB-NFD-2003P	200	3 Pole	(1) 3" (1) 1/2"	#4-300MCM
EXB-NFD-4003P	400	3 Pole	(2) 3" (1) 1/2"	#2-600MCM

EXB-FDS FUSED DISCONNECT SWITCHES (Type J Fuses)

CATALOG NUMBER	SWITCH RATING	TYPE	CONDUITS top/bot.	WIRE SIZE
EXB-FDS-0303P	30	3 Pole	(1) 2" (1) 1/2"	#14-4
EXB-FDS-0603P	60	3 Pole	(1) 2" (1) 1/2"	#14-4
EXB-FDS-1003P	100	3 Pole	(1) 2" (1) 1/2"	#14-2/0
EXB-FDS-2003P	200	3 Pole	(1) 3" (1) 1/2"	#4-300MCM
EXB-FDS-4003P	400	3 Pole	(2) 3" (1) 1/2"	#2-600MCM

- ABB Switches are used on all 30 to 400 Ampere assemblies.
- For Horsepower Ratings and Dimensions, see page DE11.
- Disconnect Switches suitable for type 'J' fuses only.

Standard Materials/Finish
- Enclosures: Copper-free aluminum (less than 4/10 of 1% copper content
- Hinges and Cover Bolts: Stainless steel
- Aluminum lacquer paint finish

Electrical Rating Ranges
- 600 VAC
- 30, 60, 100, 200 and 400 Amp

Consult Factory for special conduit layouts and ATEX requirements

MODIFICATIONS

SUFFIX NUMBER	DESCRIPTION
KIT-251	100 amp ground lug
KIT-252	225 amp ground lug
SU3*	Drain/Breather install NEMA 7CD
SU3B*	Drain/Breather install NEMA 7BCD
SU9	Special Paint Finish
4P	4th pole 30, 60, 100A - 3 pole only*
A	1 NC+1NO Auxiliary
AA	2 NC+2NO Auxiliary

NOTE: The installation of a Drain & Breather will void the NEMA 4-4X ratings of enclosure.
*non-fused

HUBBELL®
KILLARK®

Product Datasheet

Catalog Home | Home Page | SEARCH

XEDS-100A

Representative of product series but not exact configuration shown

XEDS/XDS SERIES • DISTRIBUTION EQUIPMENT
DISCONNECT SWITCHES • 3 POLE/NON-FUSIBLE

Product Specifications	
Product Type	DISCONNECT SWITCHES
Harshest Environment	Class I, Div. 1, Groups C,D
Assembly	Complete
Voltage	600 VAC (Max.), 250 VDC
Disconnect Amps/Type	100 Amp/ Non-Fusible
Auxiliary Contacts	1
Hub Arrangement	Feed-Through Entry Top and Bottom

Complete_Location_Ratings	**Click Here**
Applications	**Click Here**
Features	**Click Here**
Dimensions	**Click Here**
Horsepower Rating	**Click Here**

Catalog Page Link	Click Here for Catalog Page
Notes	**Click Here**
Modifications	**Click Here**
Compressed Product Number	XEDS100A

Although every attempt has been made to ensure the accuracy of this material, neither Killark nor Hubbell Incorporated (DE) assumes responsibility for any inaccuracies or omissions in the data presented. As a safety precaution, information utilized herein should be verified with the National Electrical Code and other sources.

Generally, Killark products are covered by one or more Third Party Certifiers. There may be instances where not all products on a particular catalog page containing a certifier's logo are listed. When certification information is required, consult Killark or refer to the appropriate certifier for listings.

Since conditions of use of the product are outside of the care, custody and control of Killark, the purchaser should determine product suitability for their intended use, and assume all risks and liability whatsoever in connection therewith.

Product Datasheet

Catalog Home | Home Page | SEARCH

XEDS-30A

XEDS/XDS SERIES • DISTRIBUTION EQUIPMENT
DISCONNECT SWITCHES • 3 POLE/NON-FUSIBLE

Product Specifications	
Product Type	DISCONNECT SWITCHES
Harshest Environment	Class I, Div. 1, Groups C,D
Assembly	Complete
Voltage	600 VAC (Max.), 250 VDC
Disconnect Amps/Type	30 Amp/ Non-Fusible
Auxiliary Contacts	1
Hub Arrangement	Feed-Through Entry Top and Bottom

Complete_Location_Ratings	**Click Here**
Applications	**Click Here**

Features	**Click Here**
Dimensions	**Click Here**
Horsepower Rating	**Click Here**
Catalog Page Link	Click Here for Catalog Page
Notes	**Click Here**
Modifications	**Click Here**
Compressed Product Number	XEDS30A

Although every attempt has been made to ensure the accuracy of this material, neither Killark nor Hubbell Incorporated (DE) assumes responsibility for any inaccuracies or omissions in the data presented. As a safety precaution, information utilized herein should be verified with the National Electrical Code and other sources.

Generally, Killark products are covered by one or more Third Party Certifiers. There may be instances where not all products on a particular catalog page containing a certifier's logo are listed. When certification information is required, consult Killark or refer to the appropriate certifier for listings.

Since conditions of use of the product are outside of the care, custody and control of Killark, the purchaser should determine product suitability for their intended use, and assume all risks and liability whatsoever in connection therewith.

Product Datasheet

Catalog Home | Home Page | SEARCH

XEDS-60A

Representative of product series but not exact configuration shown

XEDS/XDS SERIES • DISTRIBUTION EQUIPMENT
DISCONNECT SWITCHES • 3 POLE/NON-FUSIBLE

Product Specifications	
Product Type	DISCONNECT SWITCHES
Harshest Environment	Class I, Div. 1, Groups C,D
Assembly	Complete
Voltage	600 VAC (Max.), 250 VDC
Disconnect Amps/Type	60 Amp/ Non-Fusible
Auxiliary Contacts	1
Hub Arrangement	Feed-Through Entry Top and Bottom

Complete_Location_Ratings	**Click Here**
Applications	**Click Here**
Features	**Click**

	Here
Dimensions	**Click Here**
Horsepower Rating	**Click Here**
Catalog Page Link	Click Here for Catalog Page
Notes	**Click Here**
Modifications	**Click Here**
Compressed Product Number	XEDS60A

Although every attempt has been made to ensure the accuracy of this material, neither Killark nor Hubbell Incorporated (DE) assumes responsibility for any inaccuracies or omissions in the data presented. As a safety precaution, information utilized herein should be verified with the National Electrical Code and other sources.

Generally, Killark products are covered by one or more Third Party Certifiers. There may be instances where not all products on a particular catalog page containing a certifier's logo are listed. When certification information is required, consult Killark or refer to the appropriate certifier for listings.

Since conditions of use of the product are outside of the care, custody and control of Killark, the purchaser should determine product suitability for their intended use, and assume all risks and liability whatsoever in connection therewith.

Specification Section 16442

Motor Control Equipment

16442 Motor Control Equipment
ITE MCC-2E Add to Existing

Identification guide

MCC aftermarket replacement units

Answers for industry.

SIEMENS

Product history

Siemens has an installed base of Motor Control Centers dating back to 1964 due to acquisitions of Allis-Chalmers in 1978, ITE Gould in 1983 and Furnas Electric in 1996. This has resulted in eleven MCC models installed across the United States. Replacement units for these models as well as the current tiastar™ MCC offerings are built in the Siemens West Chicago plant. Siemens developed this tool to help people gain a better understanding of the wide variety of this installed base of MCCs. This should enable people to order aftermarket buckets or new MCCs much easier. In this program brochure, all the tools necessary for identifying existing MCCs to ordering forms are included. All items listed as follows: timeline, product overview, identification guide, product descriptions, work sheets and ordering check sheet. The intent of this guide is to provide a tool for Siemens customers so they can make a more educated purchasing decision. If you have any questions, please contact your local Siemens representative.

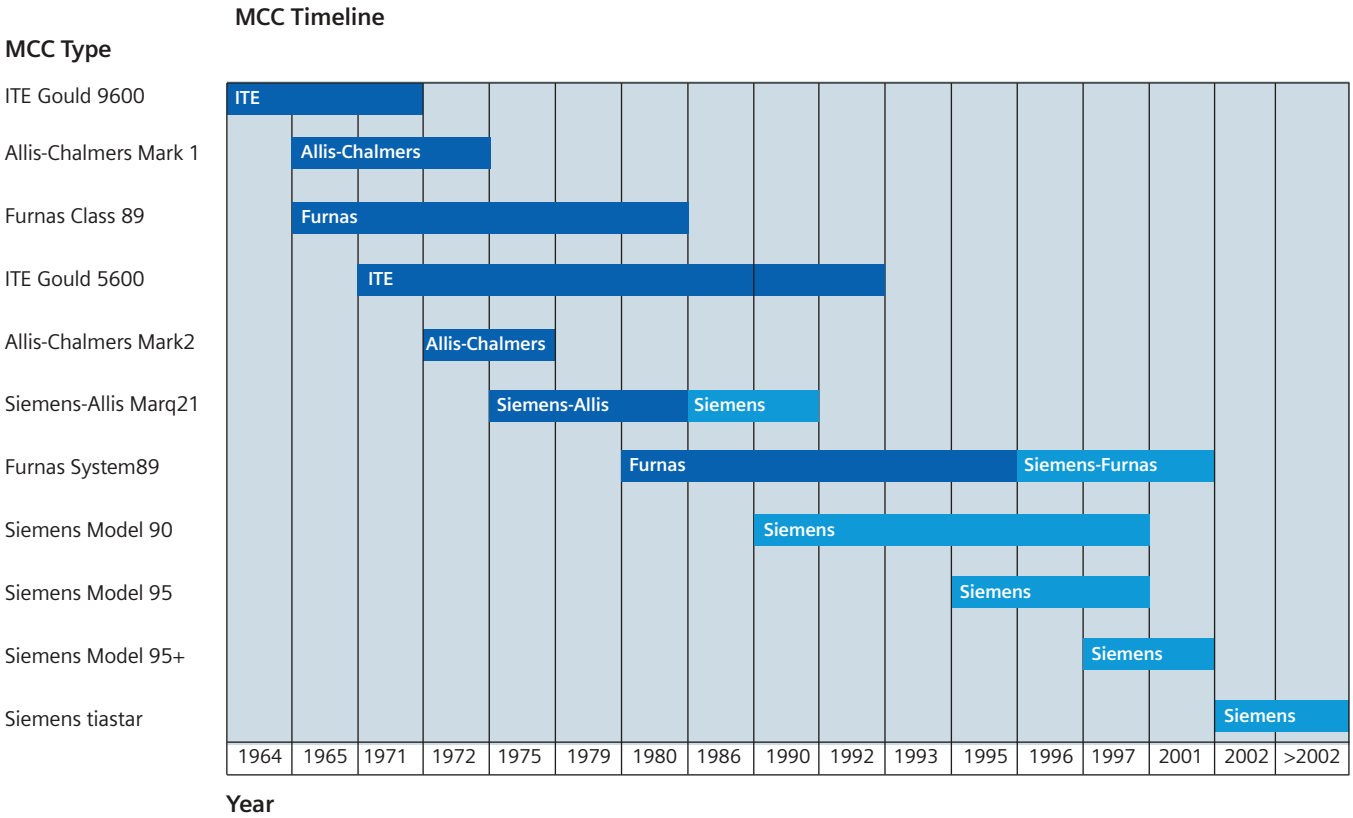

Note: Timeline represents approximate values

Product overview

This overview is a clear and concise snap shot of Siemens entire MCC product offering. For your convenience, typical MCC part numbers are shown for continued identification possibilities.

Furthermore, the overview covers the standard options for the product offering.

Original manufacturer	Model	Production dates [1]	Bucket w/ door & handle [2]	Factory retrofit [3]	Typical MCC number [4] X=Letter # = Number
Siemens	tiastar™	2002 – Current	X	—	Same as System89
Siemens/Furnas	System89	1980 – 2001	X	—	89BFXX### ### 89BSXX### ### 89BBXX### ### WX### (ex. WU760)
Siemens	Model 95 +	1997 – 2001	X	—	95BFXX### ### 95BSXX### ### 95BBXX### ### XX### (ex. WU760)
Siemens Siemens Siemens Allis Allis-Chalmers Allis-Chalmers	Model 95 Model 90 Marq 21 Mark 2 Mark 1	1995 – 1997 1990 – 1997 1975 – 1990 1972 – 1975 1965 – 1972	X X X X X	— — — — —	09-001-XXXX-XXXXX-XXX 30-001-XXXX-XXXXX 01-14XX-XXXXX-XX ##### (ex. 15375)
ITE ITE	Gould 5600 Gould 9600	1971 – 1992 1964 – 1971	— —	X X	84-XXXXX-XX 85-XXXXX-XX 86-XXXXX-XX
Furnas	Class89	1965 – 1979	—	X	89FVXXXX XXX 89SVXXXX XXX 89BVXXXX XXX V#### (ex. V2176)

1) Dates represent approximate values only.
2) Buckets exceeding 250 amps are fix mounted.
3) Contact West Chicago Aftermarket Dept. for Retrofit Program at (800) 683-6200.
4) In some instances, a generic 5 alphanumeric number is designed as the MCC sales order number. In most cases a 5 alphanumeric number within the MCC number is the sales order number. MCC numbers can be found inside the MCC bucket.

Starters 240V, 480V, 575V	NEMA size
FVNR	1-6
FVR	1-5
2S1W-CT	1-5
2S1W-VT	1-5
2S2W-CT	1-5
2S2W-VT	1-5
RVAT	2-6
RVSS	Consult factory
VFD	Consult factory

Standard options	
Amp meter + CT	Surge suppression
CT	Under voltage CB
Voltage monitor	Shunt trip
Vac. contactor	Ground stab
Transducer	High density bucket
Fuse puller	Special paint
Bypass	Timer
ASI®	4P relay
Ground fault	Extra unit space
Elapse time meter	

Identification

ITE Gould 5600/9600

Type: ITE
Typical MCC number: 84-XXXXX-XX / 85-XXXXX-XX / 86-XXXXX-XX.
Description: The 9600 models were 20" wide buckets with no vertical wire way. The 5600 model was a standard 15" wide bucket.

Operating handle and bucket stab:

5600, Version 1

5600

5600, Version 2

9600

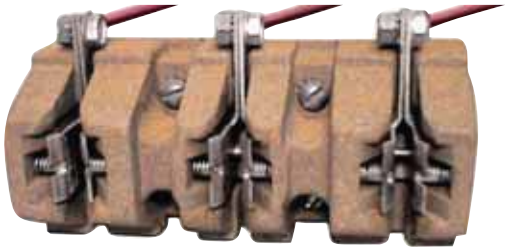

9600

Identification

GOULD 5600-9600

Product description
The 5600 and 9600 MCC retrofit buckets are designed to fit into their old design. 5600 units are 15" wide buckets and the fix mounted panels are 20" wide. 9600 units are 20" wide only.

The original Gould came with a variety of old CB and starters from ITE, Rowan, and AMP-CAP. These buckets are available up to NEMA size 5.

Note: Original components are not available. Today, we provide you with Siemens breakers and starters. A new tiastar MCC can be cabled to an existing line up with an MLO assembly.

Time line 5600: 1971 – 1992
Time line 9600: 1964 – 1971
Original mfg: ITE / Rowan Ctrl
MCC #: 84-XXXXX-XX
85-XXXXX-XX
86-XXXXX-XX
MCC plant:

Replacement capabilities

Starter units
Replacement starters are available for all plug-in and Non plug-in units. A complete unit for adding to an existing MCC includes a unit door, divider pans and all necessary mounting hardware. Features of the replacement units include:

- Siemens Starter Size 1-6
- CT, CPT, PT
- CB and fusible
- Pilot devices, relays, and fuses
- UL labeled
- Shelf is ordered separately

5600

Feeder units
Replacement feeders are available for all plug-in and Non plug-in units. A complete unit for adding to an existing MCC includes a unit door, divider pans and all necessary mounting hardware. Features of the replacement units include:

- Siemens feeder breakers and fusible switches
- Handle mechanism and hardware
- Feeder range 125A – 800A
- UL labeled

Note: 9600 units are available on fixed mounted panels only.

16442 Motor Control Equipment

GE Motor Control Centers

Proposal Nbr : 6N5-1JTB090
Requisition Nbr :

One Line Diagram

Job: CITY OF WENATCHEE WWTP IM
Linetype E9000; UL labeling required;
Section ht 90" NEMA Wiring Class II-BD; NEMA Enclosure NEMA 1G
12" Top Mounted Wireway; MCC is Front Mounting Only
480 Volts 3 Phase 3 Wire 60 Hz; Main Horz. Bus 600 Amps; Rating 42000 AIC
Min. Vertical Bus 300 Amps

Item No: 2 Pg: 1
MCC-12006E
Date : 12-14-2011

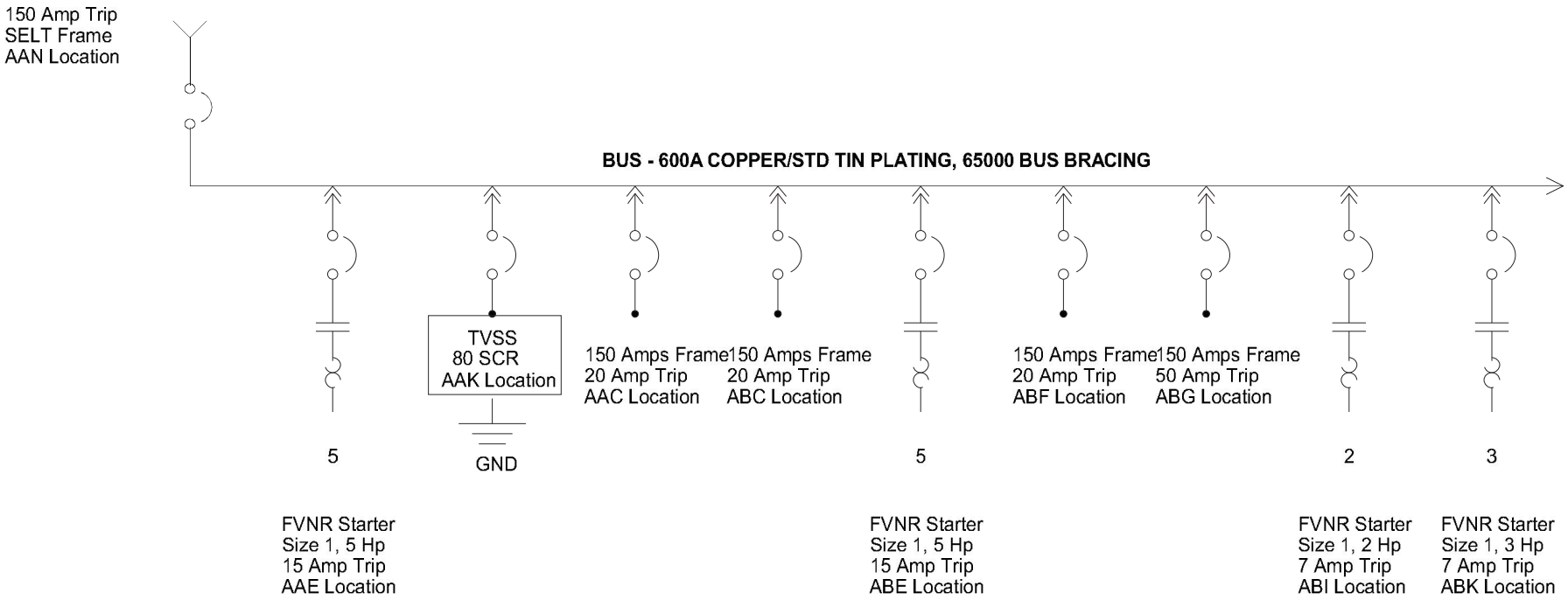

Proposal Nbr : 6N5-1JTB090
Requisition Nbr :

One Line Diagram

Job: CITY OF WENATCHEE WWTP IM
Linetype E9000; UL labeling required;
Section ht 90" NEMA Wiring Class II-BD; NEMA Enclosure NEMA 1G
12" Top Mounted Wireway; MCC is Front Mounting Only
480 Volts 3 Phase 3 Wire 60 Hz; Main Horz. Bus 600 Amps; Rating 42000 AIC
Min. Vertical Bus 300 Amps

Item No: 2 Pg: 2
MCC-12006E
Date : 12-14-2011

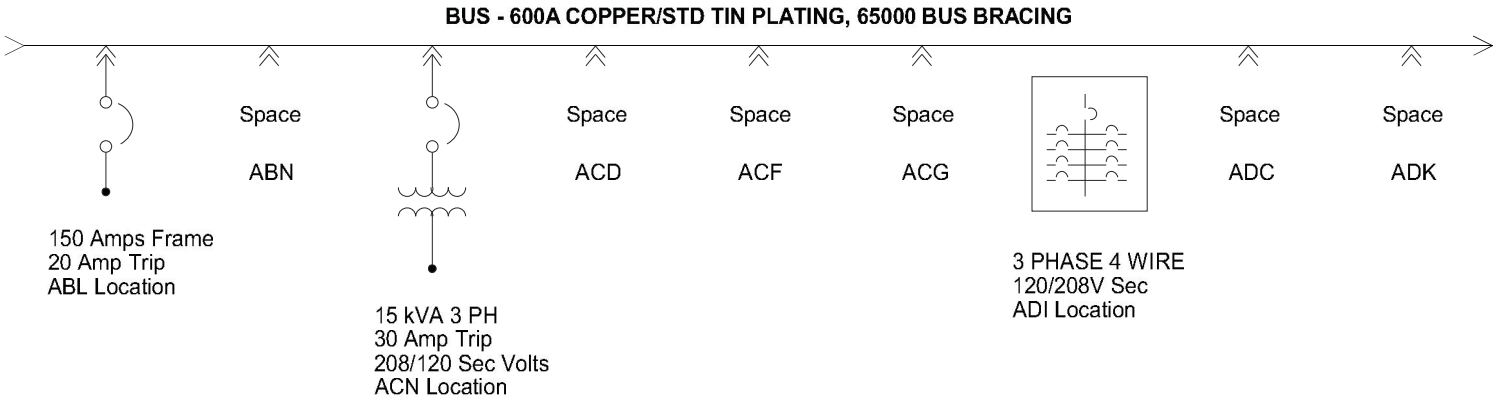

Proposal Nbr : 6N5-1JTB090
Requisition Nbr :

One Line Diagram

Job: CITY OF WENATCHEE WWTP IM
Linetype E9000; UL labeling required;
Section ht 90" NEMA Wiring Class II-BD; NEMA Enclosure NEMA 1G
12" Top Mounted Wireway; MCC is Front Mounting Only
480 Volts 3 Phase 3 Wire 60 Hz; Main Horz. Bus 600 Amps; Rating 42000 AIC
Min. Vertical Bus 300 Amps

Item No: 2 Pg: 3
MCC-12006E
Date : 12-14-2011

BUS - 600A COPPER/STD TIN PLATING, 65000 BUS BRACING

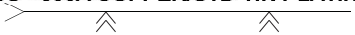

Space	Space
ADM	ADN

GEF-4628B

8000-Line/Spectra Motor Control Center

Renewal Parts Bulletin

The 8000-Line motor control center, a quality product of the General Electric Company, has been designed and manufactured to give long and satisfactory service. This Renewal Parts Bulletin contains items which, through normal use, may require periodic maintenance and replacement. Other items may never need service or replacement during the useful life of the equipment.

We feel that you are in the best position to determine your investment in Renewal Parts, taking into consideration the total amount of 8000-Line motor control centers at your facility, your proximity to General Electric franchised distributors, and the importance of minimizing equipment downtime.

For identifying and ordering replacement parts not included in this publication, refer to the "Spares Recommendation" and "Parts List" section of the renewal parts quotation for your motor control center. If this is not available, identify the equipment as follows before contacting your local distributor or General Electric sales office:

1. Equipment-GE 8000-Line motor control center
2. Complete vertical section nameplate information (for structural and bus parts)
3. Complete plug-in unit nameplate information (for individual unit parts)

Introduction 2
Ordering Instruction 3
Structural Parts 4-9
Vertical & Main Bus Parts 10-14
Unit Parts 14-29
- Handle/Handle Assembly 17-21
- Branch Overcurrent Protective Devices 22
- Fusible Disconnect Switch 23-24
- Control Power Transformer 24
- Control Terminal Board 25
- Slider Assembly (Inner-Outer) 25
- Pilot Device Bracket Escutcheon 25
- Overload Reset Assembly.....25
- Vertical Ground Bus Stab Finger 26
- Pilot Device (Type CR104P) 26
- Unit Nameplate (Blank) 26
- Power Terminal Board.....26
- Harnesses 27

Torque Table.....28

The ordering of renewal parts or complete unit replacements will be simplified by referencing the data provided on the 8000-Line motor control center section nameplate and, if required, unit nameplate.

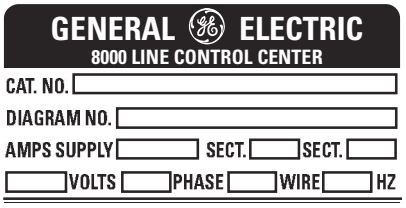

Section Nameplate (located on the front of each UL listed section, near the upper right-hand corner)

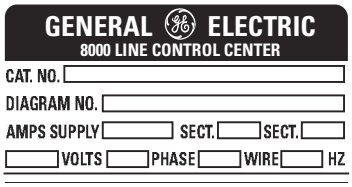

Unit Nameplate (plug-in unites-located on the right-hand vertical side barrier; Bolt-in units located in close proximity to the branch circuit overcurrent protective device)

CAT. NO.*	The General Electric, Mebane, N.C., factory catalog number
DIAGRAM NO.*	The outline summary sheet (often referred to as "record drawings") for this section
AMPS-SUPPLY	The main (i.e. horizontal) bus rating
AMPS-SECTION	The vertical bus rating

When ordering replacement parts not identified in this bulletin, both the "CAT. NO." and "DIAGRAM NO." must be referenced, accompanied by a complete description of the replacement part(s) desired.

MODEL	Type of motor control center design
VOLTS TYPE	Unit power supply voltage. Unit function (as listed on outline-l summary sheet)
CONT. VOLTS	Unit control voltage.
UNIT NO.	The factory catalog number; this identifies the section and unit location within that section
DIAGRAM	The outline summary sheet and page number which contains the wiring elementary diagram for this unit
SIZE AMPS/HP	The NEMA size rating of the starter. The ampere rating of the circuit breaker or fusible switch (for feeder unit), or horsepower rating (for combination starter units)

When ordering a complete replacement unit or replacement parts not identified in this bulletin, the "MODEL", "UNIT NO.", and "DIAGRAM" must be referenced, accompanied by a complete description of the replacement part(s) desired.

*** This information must be included on the order form.**

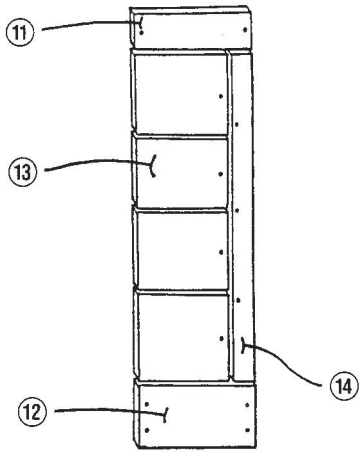

Front View

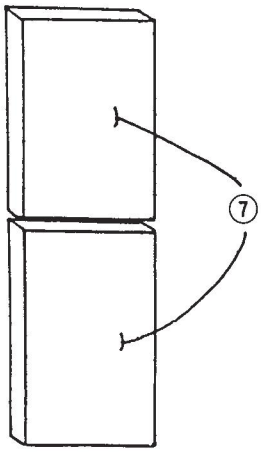

Rear View

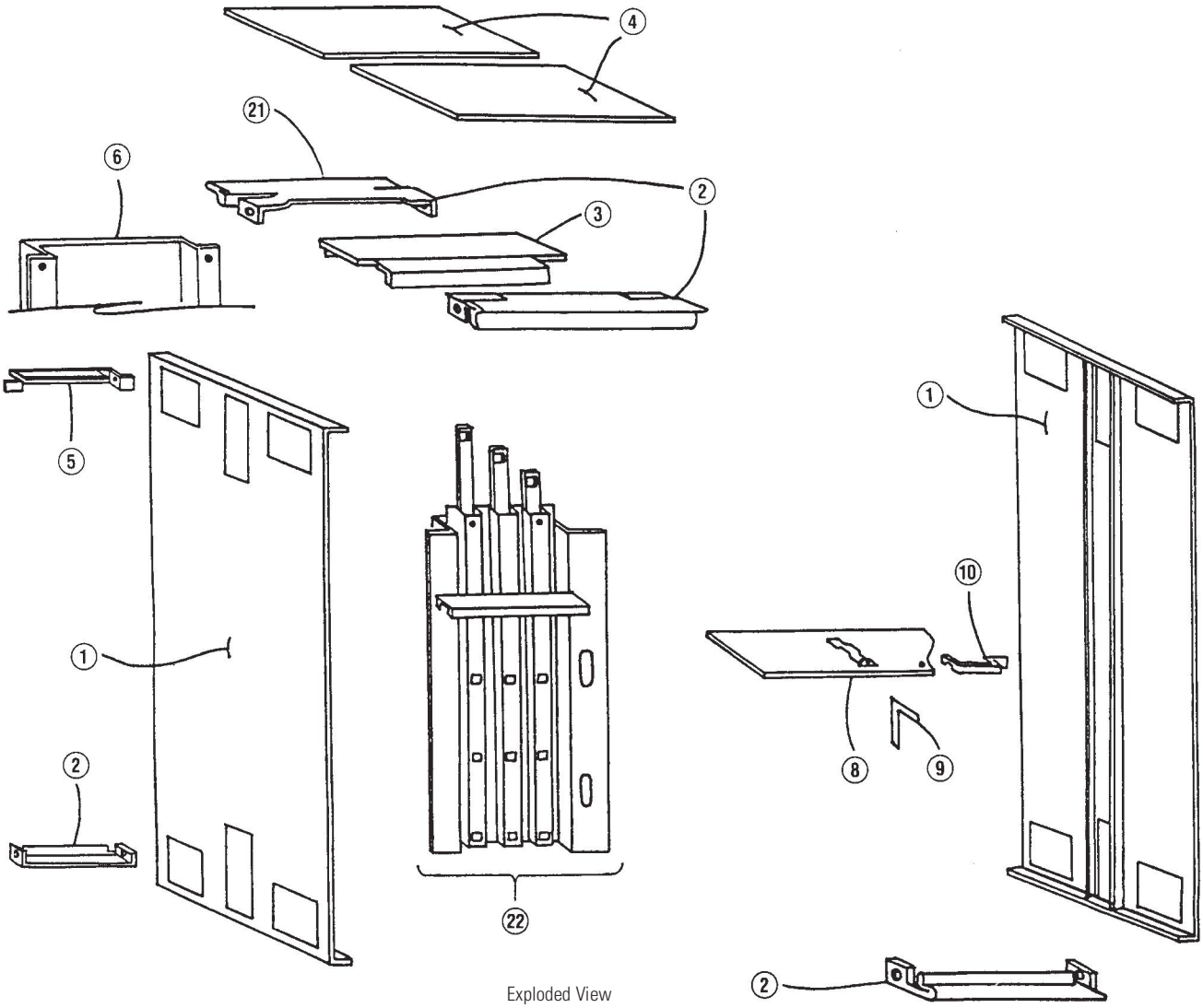

Exploded View

Item 1

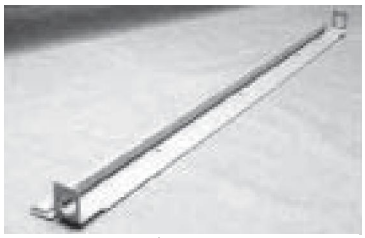
Item 2

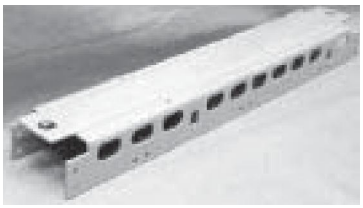
Item 3

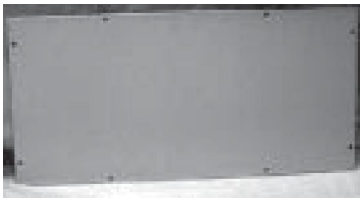
Item 4

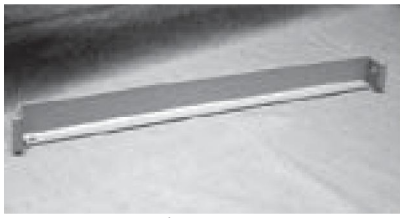
Item 5

Item 6

Item 7

Item	Description 8000 & Spectra	When Used	Cat. No.
1	Side Assembly	13-inch deep section	68J210377BBXX90XXB
		20-inch deep section	68J210377AB2090XXB
2	Case Sill	20-inch wide section	68J110304AB20XXXXB
		24-inch wide section	68J110304AB24XXXXB
3	Horizontal Channel	20-inch wide section	68J110305AB20XXXXB
		24-inch wide section	68J110305AB24XXXXB
4	Top Plate	20-inch wide section	68J110311AB2020XXB
		24-inch wide section	68J110311AB2024XXB
5	Rear Mullion	13-inches deep x 20-inches wide	68J110307AB20XXXXB
		13-inches deep x 20-inches wide	68J110307AB24XXXXB
		20-inches deep x 20-inches wide	68J110306AB20XXXXB
		20-inches deep x 24-inches wide	68J110306AB24XXXXB
6	Rear Main Bus Barrier 2”	20-inches wide	117B5088AEG20
		24-inches wide	117B5088AEG24
	Rear Main Bus Barrier 4”	20-inches wide	68J120315HY0102AFB
		24-inches wide	68J121950RQ0102AFB
7	Rear Cover 13” Deep	20-inches wide	68J120323LE0102AAB
		24-inches wide	68J120323XA0102AAB
	Rear Door Assembly 20” Deep	20-inches wide	68J210375DB2090XXB
		24-inches wide	68J210375DB2490XXB
7a (Not Shown)	Bottom Plate Note, Insert Section Width in inches (i.e., 20 or 24)	13-inch deep section	68J110312AB**XXXXB
		20-inch deep section, front	68J110312AC**XXXXB
		20-inch deep section, rear	68J110312AD**XXXXB

Item 8

Item 10

Item 9

Item 11

Item	Description 8000 & Spectra	When Used	Cat. No.
8	Shelf Assembly	Standard	68J210383BBXXXXXXY
		Top Shelf Only	68J210383ABXXXXXXY
9	Shelf Support Bracket	Bottom	117B5044P2
10	Shelf Extender	20-inch wide section	205A7680P20
		24-inch wide section	205A7680P24
11	8000 Line Wireway Cover with GE Logo	6-inches high x 20-inches wide	204B4127G1
		12-inches high x 20-inches wide	204B4127G2
		18-inches high x 20-inches wide	204B4127G3
		6-inches high x 24-inches wide	204B4127G4
		12-inches high x 24-inches wide	204B4127G5
		18-inches high x 24-inches wide	204B4127G6
	Spectra Wireway Cover with GE Logo	6-inches high x 20-inches wide	204B4178G7
		6-inches high x 24-inches wide	204B4178G4
		6-inches high x 30-inches wide	204B4178G1
		12-inches high x 20-inches wide	204B4178G2
		12-inches high x 24-inches wide	204B4178G5
		12-inches high x 30-inches wide	204B4178G8
		18-inches high x 20-inches wide	204B4178G3
		18-inches high x 24-inches wide	204B4178G6
		18-inches high x 30-inches wide	204B4178G9

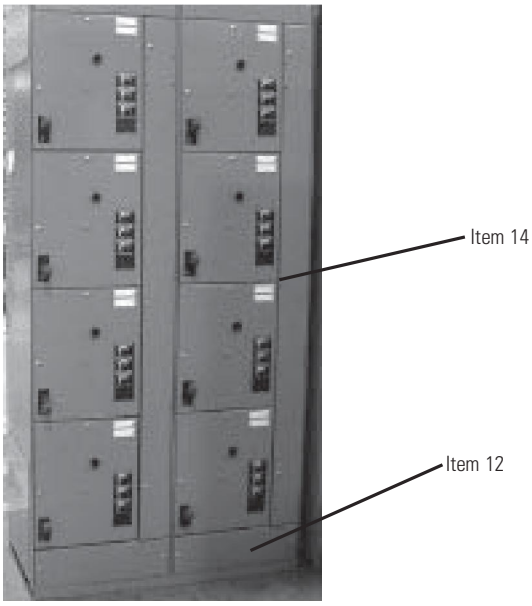

Item	Description 8000 & Spectra	When Used	Cat. No.
12	8000 & Spectra Wireway Cover Without GE Logo	6-inches high x 20-inches wide	204B4127G19
		12-inches high x 20-inches wide	204B4127G20
		18-inches high x 20-inches wide	204B4127G21
	8000 & Spectra Wireway Cover without GE Logo	6-inches high x 24-inches wide	204B4127G22
		12-inches high x 24-inches wide	204B4127G23
		18-inches high x 24 inches wide	204B4127G24
13	8000 Line Filler Kit Assembly① (Not Shown)	6-inches high	204B4145AMG1
		12-inches high	204B4145AMG2
		18-inches high	204B4145AMG3
		24-inches high	204B4145AMG4
		30-inches high	204B4145AMG5
		36-inches high	204B4145AMG6
		42-inches high	204B4145AMG7
		48-inches high	204B4145AMG8
14	8000 Line Blank Door (15-inches wide) See Item 13	6-inches high	68J210395BAXX06XXB
		12-inches high	68J210395BAXX12XXB
		14-inches high	68J210395BAXX14XXB
		18-inches high	68J210395BAXX18XXB
		24-inches high	68J210395BAXX24XXB
		30-inches high	68J210395BAXX30XXB
		42-inches high	68J210395BAXX42XXB
		48-inches high	68J210395BAXX48XXB
14a	8000 & Spectra Wire-through Door Assembly (NotShown)	*Insert height of door in inches; 6-inch increments only, from 06 to 72.	68J210375CB20**XXB

① *Includes blank door, shelf, shelf support and hinged filler strip. Referred to as a "space".*

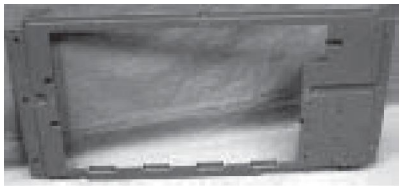

Item 15

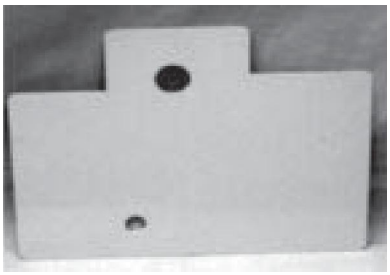

Item 17

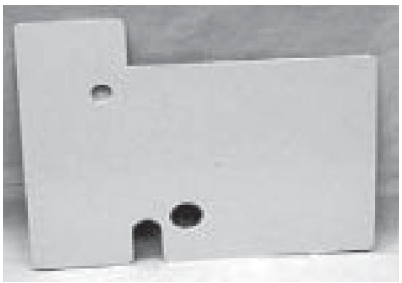

Item 16

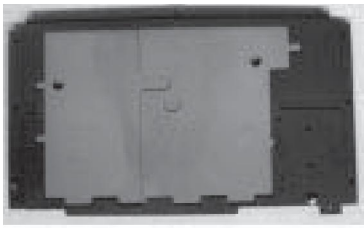

Item 17a Assembled View

Item	Description 8000 & Spectra	When Used	Cat. No.
15	Main Bus Barrier Slide Channel Guide	For Upper & Lower Slide Channels	169C6389BLP1
16	Bus Barrier (Left Hand)	2-inch main bus	204B4050WFP1
		4-inch main bus	68J120105WE0000AAN
17	Bus Barrier (Right Hand)	2-inch main bus	204B4050WEP1
		4-inch main bus	68J120105WF0000AAN

Item	Description 8000 & Spectra	Cat. No.
18	Latch Assembly, 1/4 Turn (Wire-through Door) (Not Shown)	169C06386DMG2
19	Cable Support (For Vertical Wire Harness) (Not Shown)	273A7819P1
20	Caplug (To Close Holes in Side of Section) (Not Shown)	204B4139AAG4 (Qty 5)
21	Lintel (13-inches deep only)	68J110308AB20XXXXB 20-inches wide
		68J110308AB24XXXXB 24-inches wide
22	Vertical Bus Assembly	Refer to page 10
23	End Cover Plate (Not Shown)	68J121950NF0000AAB 13-inches deep
		68J120315LF0000AAB 20-inches deep
24	Floor Channel (Not Shown)	205A3576P1A 20-inch single section
		205A3576P1E 24-inch single section
25	Grommet 5 x 5 " Cutout (Not Shown)	169C6386CYP1
26	Hinge Bracket (Right Hand) (Not Shown)	117B5027P3
27	Hinge Bracket Screw (Not Shown)	204B4139AAG15 (Qty 5)
28	Stub Shelf (Not for Plug-in Use) (Not Shown)	68J121379BB20XXXXB
29	Touch-up Spray Paint, ANSI-61 (Light Gray) (Not Shown)	TSP61

Spectra Series Structural Parts

Part	Description	Cat. No.
Filler Kit – Spectra Line	6-inch	204B4145AMG1S
	12-inch	204B4145AMG2S
	18-inch	204B4145AMG3S
	24-inch	204B4145AMG4S
	30-inch	204B4145AMG5S
	36-inch	204B4145AMG6S
	42-inch	204B4145AMG7S
	48-inch	204B4145AMG8S
Blank Spectra Door	6-inch	68J210397DAXX06XXB
	12-inch	68J210397DAXX12XXB
	18-inch	68J210397DAXX18XXB
	24-inch	68J210397DAXX24XXB
	30-inch	68J210397DAXX30XXB
	36-inch	68J210397DAXX36XXB
	42-inch	68J210397DAXX42XXB
	48-inch	68J210397DAXX48XXB
Spectra Fill Strip	6-inch	275A5650BVP9
	12-inch	275A5650BVP10
	18-inch	275A5650BVP11
	24-inch	275A5650BVP12
	30-inch	275A5650BVP13
	36-inch	275A5650BVP14
	42-inch	275A5650BVP15
	48-inch	275A5650BVP16
Door Hinges	Spectra Hinge	204B4145FZP1
	Spectra Hinge Pin	273A7728TLP1
Wire Trough Doors	6-inch	68J210397AC2006XXB
	12-inch	68J210397AC2012XXB
	18-inch	68J210397AC2018XXB
	24-inch	68J210397AC2024XXB
	30-inch	68J210397AC2030XXB
	36-inch	68J210397AC2036XXB
	42-inch	68J210397AC2042XXB
	48-inch	68J210397AC2048XXB
	54-inch	68J210397AC2054XXB
	60-inch	68J210397AC2060XXB
	66-inch	68J210397AC2066XXB
	72-inch	68J210397AC2072XXB

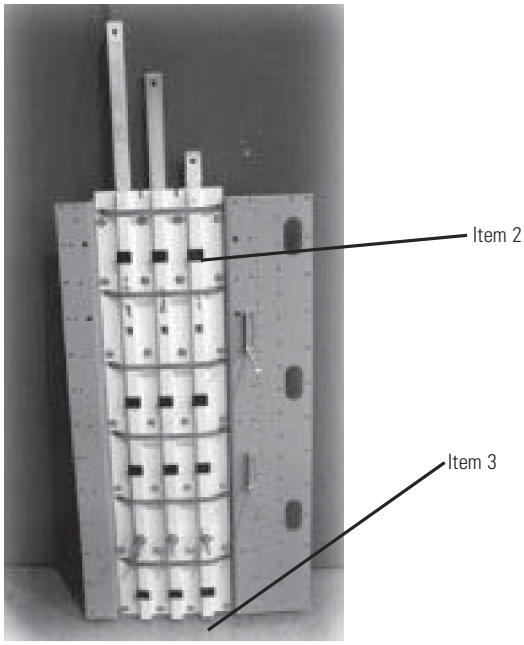

Vertical Bus Assembly, 90-inch High Section, 4-inch Main Bus Bars

Item	Height of Bottom Horizontal Wireway Cover	Short-circuit Bracing	Vertical Bus Rating (Amps)	Cat. No.
1	12-inch	22000 AIC	300	IC110V3*66#1
	6-inch	22000 AIC	300	IC110V3*72#1
	12-inch	22000 AIC	450	IC110V4*66#1
	6-inch	22000 AIC	450	IC110V4*72#1
	12-inch	22000 AIC	600	IC110V6*66#1
	6-inch	22000 AIC	600	IC110V6*72#1
	12-inch	42000 AIC	300	IC110V3*66#3
	6-inch	42000 AIC	300	IC110V3*72#3
	12-inch	42000 AIC	450	IC110V4*66#3
	6-inch	42000 AIC	450	IC110V4*72#3
	12-inch	42000 AIC	600	IC110V6*66#3
	6-inch	42000 AIC	600	IC110V6*72#3
	12-inch	65000 AIC	300	IC110V3*66#5
	6-inch	65000 AIC	300	IC110V3*72#5
	12-inch	65000 AIC	450	IC110V4*66#5
	6-inch	65000 AIC	450	IC110V4*72#5
	12-inch	65000 AIC	600	IC110V6*66#5
	6-inch	65000 AIC	600	IC110V6*72#5

** For 20-inch wide section, insert "M". For 24-inch wide section, insert "A".*

 # For Copper with Tin Immersion Plating, insert "B". For Copper with Silver Immersion Plating, insert "C".

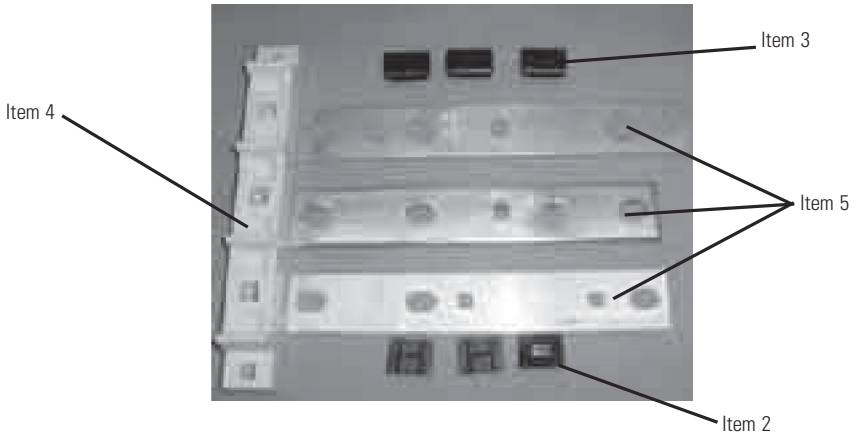

Vertical Bus Assembly, 90-inch High Section, 2-inch Main Bus Bars

Item	Height of Bottom Horizontal Wireway Cover	Short-circuit Bracing	Vertical Bus Rating (Amps)	Cat. No.
1	6-inch	42000 AIC	300	IC110V3*66#3
	12-inch	42000 AIC	300	IC110V3*60#3
	6-inch	42000 AIC	450	IC110V4*66#3
	12-inch	42000 AIC	450	IC110V4*60#3
	6-inch	42000 AIC	600	IC110V6*66#3
	12-inch	42000 AIC	600	IC110V6*60#3
	6-inch	65000 AIC	300	IC110V3*66#5
	12-inch	65000 AIC	300	IC110V3*60#5
	6-inch	65000 AIC	450	IC110V4*66#5
	12-inch	65000 AIC	450	IC110V4*60#5
	6-inch	65000 AIC	600	IC110V6*66#5
	12-inch	65000 AIC	600	IC110V6*60#5

** For 20-inch wide section, insert "N". For 24-inch wide section, insert "B".*
 # For Copper with Tin Plating, insert "B". For Copper with Silver Plating, insert "C".

Item	Description	Cat. No.
2	Plug for Stab Opening	204B4050VPP1
3	Vertical Bus Isolator (bottom)	151A7284P1
4	Main Bus Support (2-inch bus bars)	117B5047P1
	Main Bus Support (4-inch bus bars)	68J122091FQ0000AAB
5	Insulator (Not Shown)	75A105521P101

Vertical Bus Assembly for Back-to-Back Construction

Short-circuit Bracing	Front Vertical Bus Assembly	Rear Vertical Bus Assembly*
22000 AIC	Use Standard Catalog Number	Use Standard Catalog Number
42000 AIC	Change Last Digit of Standard Cat. No. from 3 to 4	Use Standard Catalog Number

Caution: If the original 8000-Line MCC was not ordered with back-to-back construction and was braced for 42000 AIC, the rear vertical bus assembly will not physically fit in back-to-back construction.

Main Bus Assemblies – Main Bus Bar 2-inch

Item	Rating (Amps)	Material	Plating	Phase/ Location	Cat. No. 22000/42000 Bracing	Cat. No. 65000 AIC Bracing
6	600	Copper	Tin	L1-Top	193A7608P12*	148B5181P25*
				L2-Middle	193A7609P12*	148B5181P27*
				L3-Bottom	193A7610P12*	148B5181P29*
			Silver	L1-Top	193A7608P11*	148B5181P1*
				L2-Middle	193A7609P11*	148B5181P5*
				L3-Bottom	193A7610P11*	148B5181P9*
		Alum.	Tin	L-Top	193A7608P3*	148B5181P4*
				1-2-Middle	193A7609P3*	148B5181P8*
				1-3-Bottom	193A7610P3*	148B5181P12*
	800	Copper	Tin	L1-Top	193A7608P17*	148B5181P26*
				1-2-Middle	193A7609P17*	14865181P28*
				W-Bottom	193A7610P17*	148B5181P30*
			Silver	L1-Top	193A7608P14*	148B5181P14*
				L2-Middle	193A7609P14*	148B5181P18*
				L3-Bottom	193A7610P14*	148B5181P22*
		Alum.	Tin	L1-Top	193A7608P6*(#)	148B5181P13*(#)
				L2-Middle	193A7609P6*(#)	148B5181P17*(#)
				L3-Bottom	193A7610P6*(#)	148B5181P21*(#)
	1000	Copper	Tin	–	Same as 600 Amp only use 2 bars/phase	
			Silver	–	Same as 600 Amp only use 2 bars/phase	

**Add one letter for each vertical section in the MCC line-up, to a maximum of 3; For 20-inch wide section, add "A". For 24-inch wide section, add "E".*
 # Use quantity of two (2) bars per phase.

Main Bus Assemblies – Main Bus Bar 4-inch

Item	Rating (Amps)	Material	Plating	Phase	Cat. No. Front Bar	Cat. No. Rear Bar
6	1200	Copper	Tin	L1, L2 or L3	232A9481P12*	N/A
			Silver	L1, L2 or L3	232A9481P11*	N/A
		Alum.	Tin	L1, L2 or L3	232A9480P5*	232A9481P5*
	1600	Copper	Tin	L1. L2 or L3	232A9480P15*	232A9481P15*
			Silver	L1, L2 or L3	232A9480P16*	232A9481P16*
	2000	Copper	Tin	L1, L2 or L3	232A9480P19*	232A9481P19*
			Silver	L1, L2 or L3	232A9480P20*	232A9481P20*

**Add one letter for each vertical section in the MCC line-up, to a maximum of 3; For 20-inch wide section, add "A". For 24-inch wide section, add "E".*
 # Use quantity of two (2) bars per phase.

Other Common Parts (Not Shown)

Description			Cat. No.	
			Bus Bar	Splice Bar
Copper Ground Bus	1/4" x 1"	Unplated	193A7611P5*	232A9491P1
		Tin plated	193A7611P14*	232A9491P4
		Silver plated	193A7611P13*	232A9491P5
	1/4" x 2"	Unplated	193A7611P1*	151A1286P1
		Tin plated	193A7611P18*	151A1286P5
		Silver plated	193A7611P17*	151A1286P4
Aluminum Ground Bus	1/4" x 2"	Tin plated	193A7611P6*	193A7295P2
	3/8" x 2"	Tin plated	193A7611P20*	193A7295P1
Copper Neutral Bus	1/4" x 1 "	Tin plated	193A7611P17*	161A9259P17
		Silver plated	193A7612P15*	161A9259P15
	1/4" x 2"	Tin plated	193A7612P13*	161A9259P10
		Silver plated	193A7612P12*	161A9259P9
	3/8" x 2"	Tin plated	193A7612P20*	161A9259P6
		Silver plated	193A7612P21*	161A9259P5
Aluminum Neutral Bus	1/4" x 2"	Tin plated	193A7612P16*	161A9259P13
	3/8" x 2"	Tin plated	193A7612P3*	148B5298P7

** Add one letter for each vertical section in the MCC line-up, to a maximum of 3;*
For 20-inch wide section, add "A"; For 24-inch wide section, add "E".

Description	Cat. No.
Alum. Joint Compound (Grease) 4 oz. tube	302A3747P3
Neutral Bus Mounting Bracket (minimum of 2-required)	151A1271P1
Neutral Bus Insulator (minimum of 2-required)	796A526P1
Vertical Bus Shutter Assembly	169C6350AY01

Main Bus Splice Bar Kits (Not Shown)

Main (Horizontal) Bus Data			Bus Splice Kit
Rating (Amps)	Material	Plating	Cat. No.①
600	Copper	Tin	272A5610G26
	Copper	Silver	272A5610G1
	Aluminum	Tin	272A5610G9 ②
800	Copper	Tin	272A5610G25
	Copper	Silver	272A5610G27
	Aluminum	Tin	272A5610G6 ②
1000	Copper	Tin	272A5610G24
	Copper	Silver	272A5610G2
1200	Copper	Tin	272A5610G23
	Copper	Silver	272A5610G13
	Aluminum	Tin	272A5610G15 ②
1600	Copper	Tin	272A5610G22
	Copper	Silver	272A5610G11
2000	Copper	Tin	272A5610G21
	Copper	Silver	272A5610G12

① Kit Catalog Number includes bus splices required for one complete splice of all three phases of the main (i.e., horizontal bus).
② Aluminum joint compound (grease) must be ordered separately. Order Catalog Number; 302A3747P3.

8000-Line

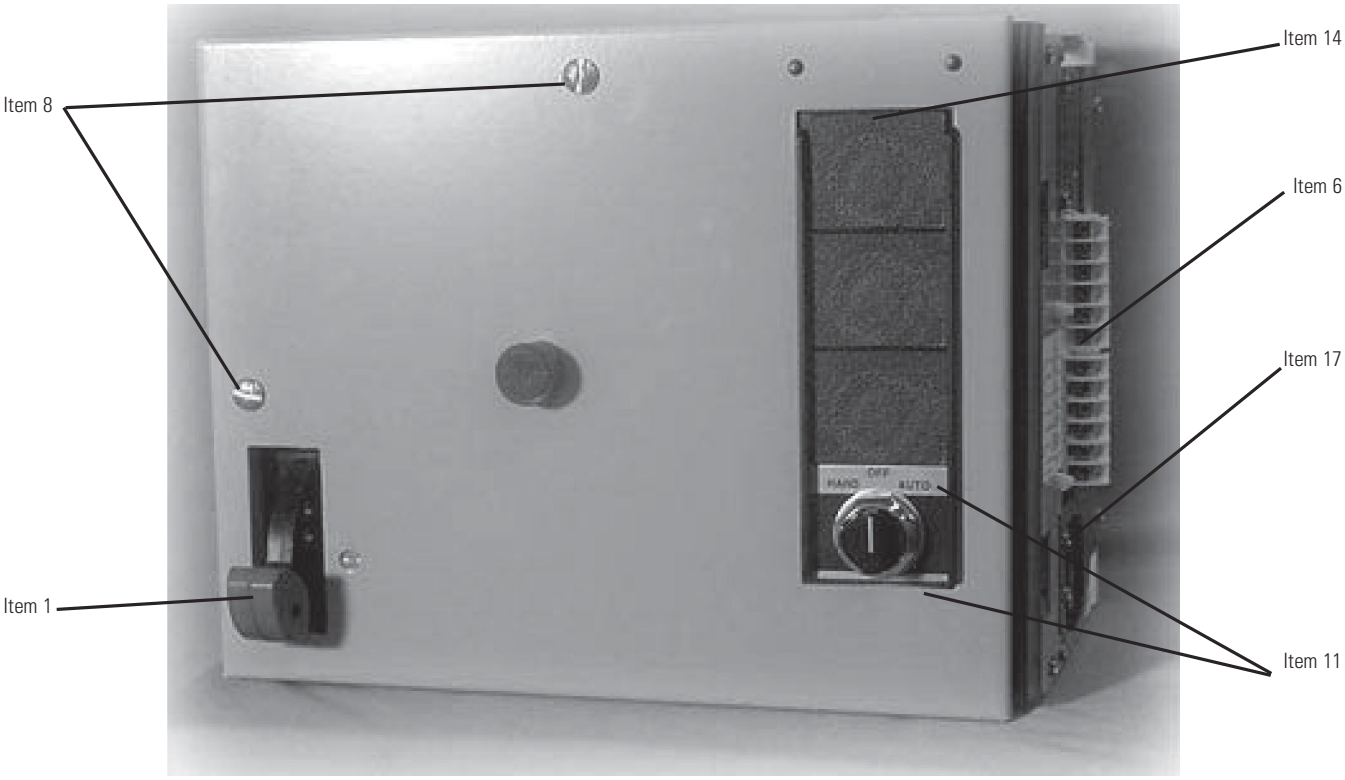
Item 14
Item 8
Item 6
Item 17
Item 1
Item 11
HAND
OFF
AUTO

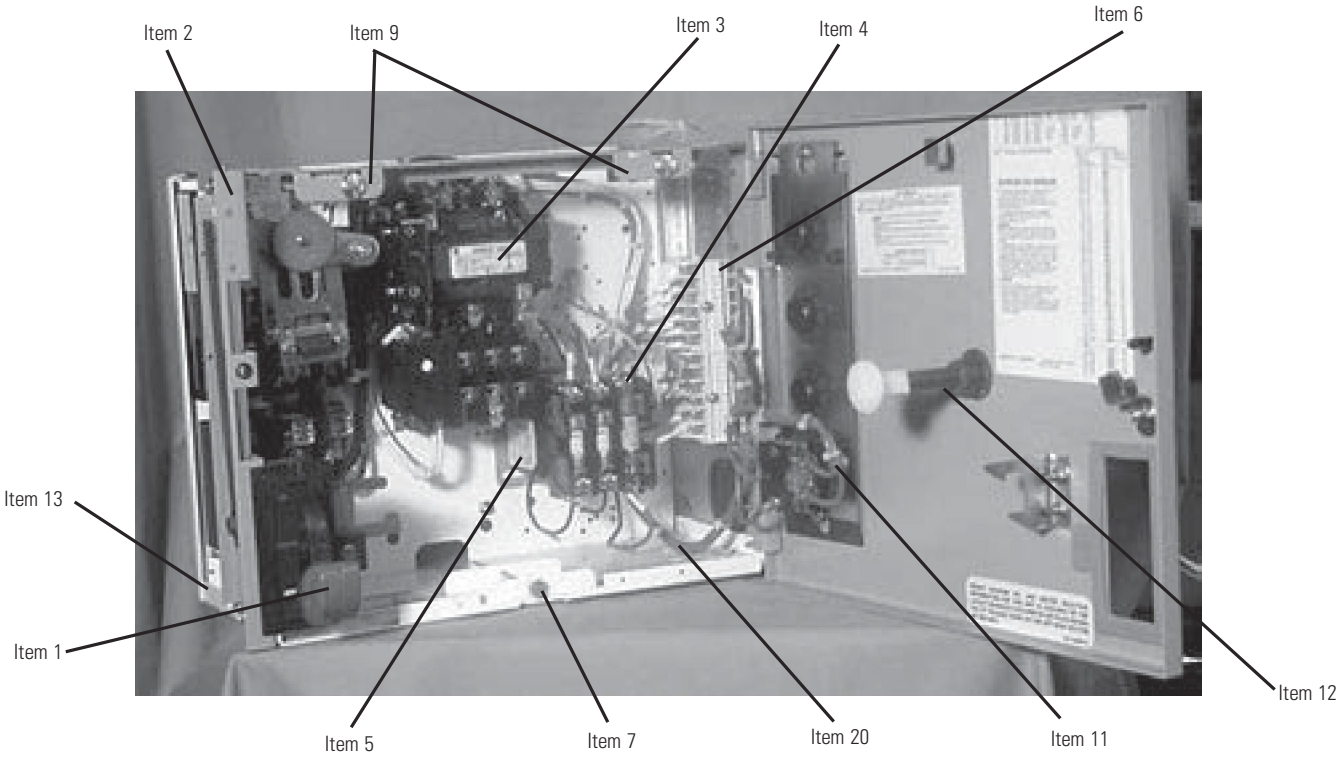
Item 2
Item 9
Item 3
Item 4
Item 6
Item 13
Item 1
Item 12
Item 5
Item 7
Item 20
Item 11

8000-Line & Spectra

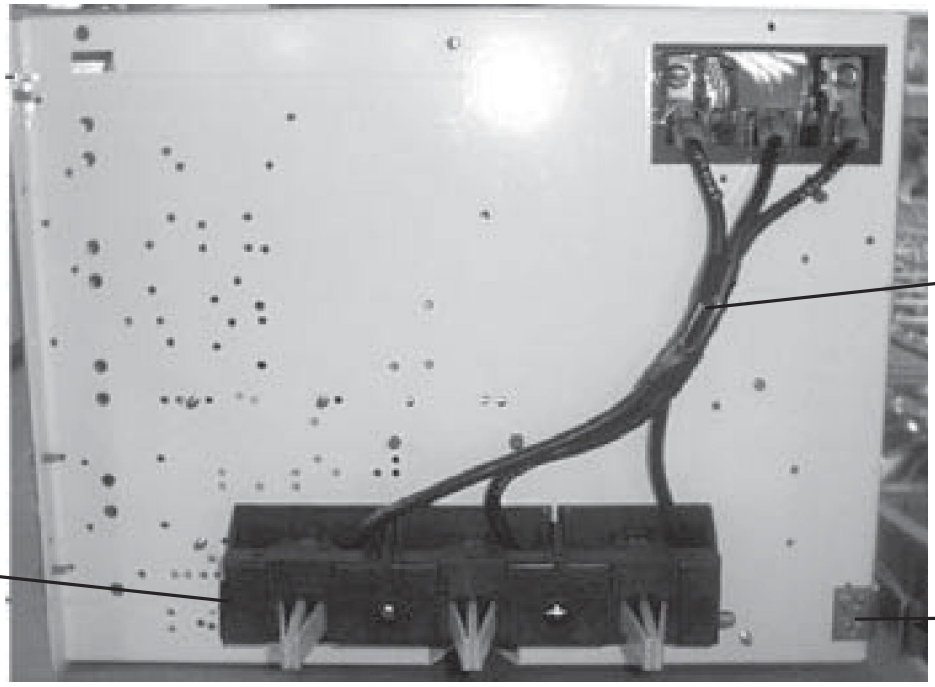

Spectra

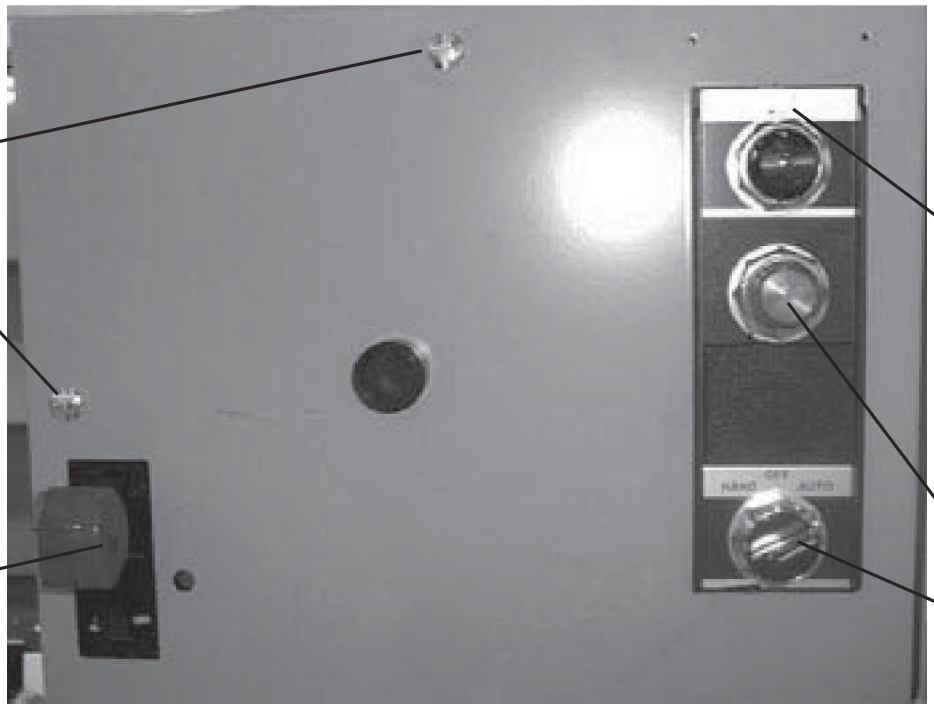

Spectra

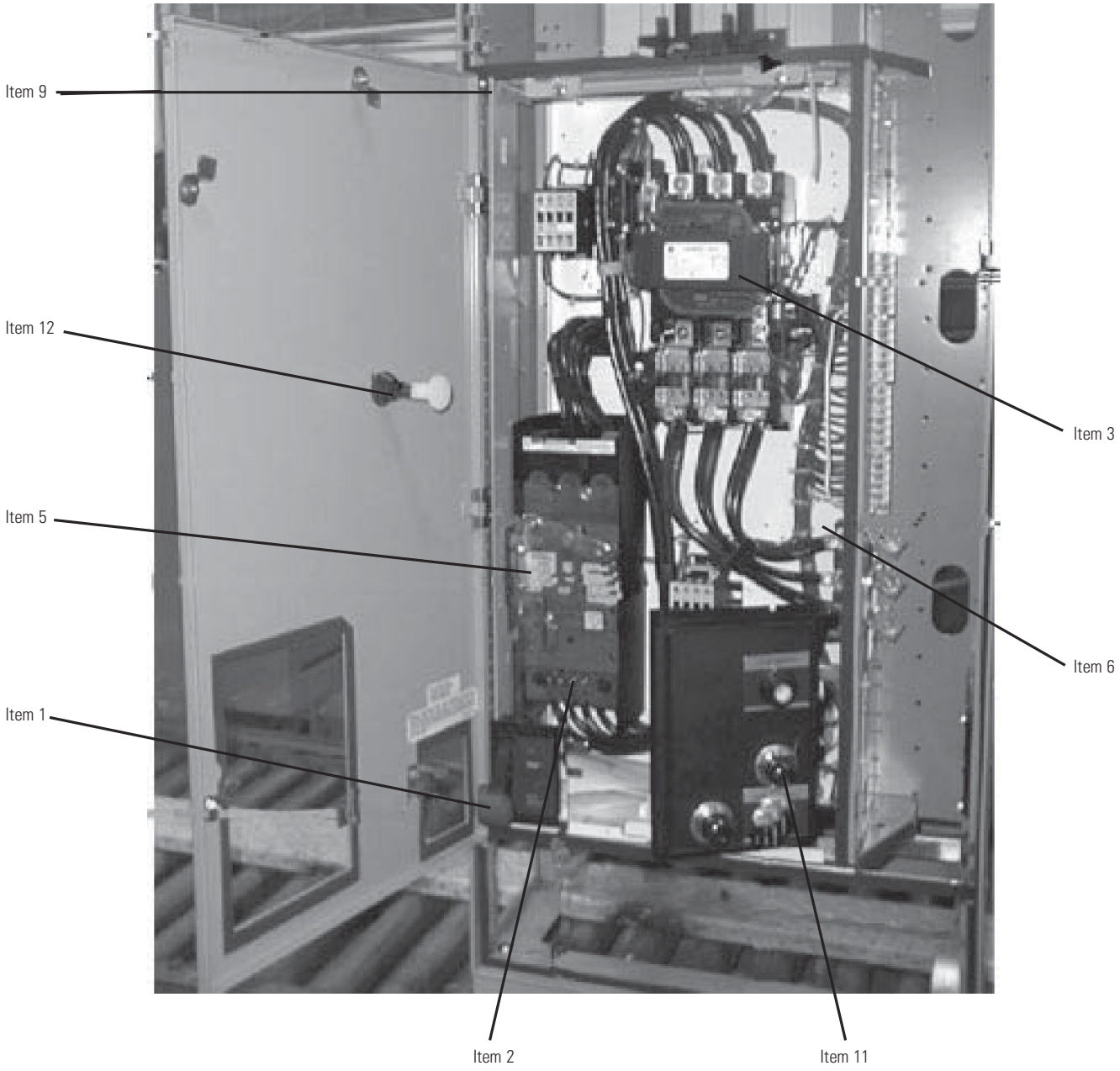

Handle/Handle Assembly

8000 Line – Handles for combination starter units, "Handle (Only)" includes plastic handle with egg-shaped knob; "Handle assembly" includes handle, egg-shaped knob, escutcheon, and steel linkage to mount on unit.

Item	Unit Function	NEMA Size	Unit Door Height (Inches)	Handle Only Cat. No. 204B4050	Circuit Breaker Combination		Fusible Disconnect Combination	
					Type	Handle Assembly Cat. No.	Max. Fuse Size (Amps)	Handle Assembly Cat. No.
1	FVNR	1 or 2	12	RWG6	TED-TEC-TECL	169C6350KEG1	30/60	169C6350KHG1
			18	RWG6	TED-TEC-TECL	169C6350KEG2	30/60	169C6350KHG2
			24	RWG6	TED-TEC-TECL	169C6350KEG3	30/60	169C6350KHG3
			18	RWG6	TB1	169C6350KJG1		
			24	RWG6	TB1	169C6350KJG2		
			30	RWG6	TB1	169C6350KJG3		
		2	18	RWG6			100	169C6350KHG14
			24	RWG6			100	169C6350KHG3
			30	RWG6			100	169C6350KHG4
		3	24	RWG6	TED-TEC-TECL-TB1	169C6381ABG2	100	169C6350KHG6
			24	RWG5	TFJ-TFK	169C6381AAG1	–	–
			30	RWG6			200	169C6350KHG7
			36	RWG6			200	169C6350KHG8
			42	RWG6			200	169C6350KHG9
		4	30	RWG6	TED-TEC-TECL-TB1	169C6381ABG2		
			30	RWG5	TFJ-TFK	169C6381AAG1		
			42	RWG6			400	169C6350KGG3
			48	RWG6			400	169C6350KGG3
		5	36	FNG2	TJK-TJC	169C6381AKG1		
			42	FNG2	TB4	169C6381AKG1		
			48	FNG2	TKM-TKC-TB6	169C6381AKG1		
			54	FNG2	Spectra G-Frame		600	169C6381AKG2
	FVR	1	18	RWG6	TED-TEC-TECL	169C6350KEG2	30/60	169C6350KHG2
		1 or 2	24	RWG6	TED-TEC-TECL	169C6350KEG3	30/60	169C6350KHG3
			30	RWG6	TED-TEC-TECL	169C6350KEG4	30/60	169C6350KHG4
		2	36	RWG6	TED-TEG-TECL	169C6350KEG5	30/60	169C6350KHG1
			24	RWG6			100	169C6350KHG5
			30	RWG6			100	169C6350KHG12
			36	RWG6			100	169C6350KHG13
		3	42	RWG6			200	169C6350KHG9
			48	RWG6			200	169C6350KHG10
		3 or 4	36	RWG6	TED-TEC-TECL-TB1	169C6381ABG2		
			36	RWG5	TFJ-TFK	169C6381AAG1		
		4	42	FNG2	TB4	169C6381AKG5		
			60	RWG6			400	169C6350KGG1
		5	66	FNG2	Spectra G-Frame TJJ-TJK-TJC	169C6381AKG5	600	169C6381AKG2

Handle/Handle Assembly

8000 Line – Handles for combination starter units, "Handle (Only)" includes plastic handle with egg-shaped knob; "Handle assembly" includes handle, egg-shaped knob, escutcheon, and steel linkage to mount on unit.

Item	Unit Function	NEMA Size	Unit Door Height (Inches)	Handle Only Cat. No. 204B4050	Circuit Breaker Combination		Fusible Disconnect Combination	
					Type	Handle Assembly Cat. No.	Max. Fuse Size (Amps)	Handle Assembly Cat. No.
1	FVR	2	48	RWG6	TED-TEC-TECL	169C6350KEG1	100	169C6350KHG1
		3 or 4	48-54	RWG6	TED-TEC-TECL-TB1	169C6381ABG3		
			60	RWG6	TED-TEC-TECL-TS1	169C6350KEG1	–	
			48-54-60	RWG6	TFJ	169C6381AAG1	200	169C6350KHG1
			48-54-60	RWG5	TFK	169C6381AAG1	400	169C6350KGG1
		5	54	FNG2	TJJ-TJK-TJC	169C6381AKG5		
			66	FNG2	TKM-TKC	169C6381AKG5	600	169C6381AKG2
	Part Winding	1	24	RWG6	TED-TEC-TECL	169C6350KEG3	100	169C6350KHG3
		2	30	RWG6	TED-TEC-TECL	169C6350KEG4	100	169C6350KHG4
			30	RWG5	TFJ-TFK	169C6381AAG1		
			36	RWG6			200	169C6350KHGB
		3	48 (Vert.)	RWG6	TED-TEC-TECL	169C6350KEG1		
			48 (Horiz.)	RWG6	TED-TEC-TECL	169C6381ABG3		
			48 or 54	RWG6			200	169C6350KHG1
		3 or 4	48	RWG5	TFJ-TFK	169C6381AAG1		
			60	RWG6			400	169C6350KGG1
		4	667	FNG2	TJJ-TJK	169C6381AKG5	600	169C6381AKG2
	2S1W	1	18	RWG6	TED-TEC-TECL	169C6350KEG2	30/60	169C6350KHG2
	2S2W	1 or 2	24	RWG6	TED-TEC-TECL	169C6350KEG3	30/60	169C6350KHG3
			30	RWG6	TED-TEC-TECL	169C6350KEG4	30/60	169C6350KHG4
		2	36	RWG6	TED-TEC-TECL	169C6350KEG5	30/60	169C6350KHG11
			24	RWG6			100	169C6350KHG5
			30	RWG6			100	169C6350KHG12
			36	RWG6			100	169C6350KHG13
		3	48	RWG6			200	169C6350KHG10
		3 or 4	42	RWG6	TED-TEC-TECL-TB1	169C6381ASG2		
			42	RWG5	TFJ-TFK	169C6381AAG1		
		4	60	RWG6			400	169C6350KGG1
		5	66		TJJ-TJK-TJC, Spectra G-Frame	169C6381AKG1	600	169C6381AKG2

Handle/Handle Assembly

Spectra Line – Handles for combination starter units, "Handle (Only)" includes plastic handle with egg-shaped knob; "Handle assembly" includes handle, egg-shaped knob, escutcheon, and steel linkage to mount on unit.

Item	Application	Space Height	Where Used	Mounted	Cat. No.
	Size 1& 2 FVNR	1.0	SELI, SELT	Vertical	137D7060AYG1
	Size 1 - 3 FVNR, FVR, 2S1W, 2S2W	1.5	SELI, SELT	Vertical	137D7060AYG2
	Size 1 - 3 FVNR, FVR, 2S1W, 2S2W	2.0	SELI, SELT	Vertical	137D7060AYG3
	Size 1 - 3 FVNR, FVR, 2S1W, 2S2W	2.5	SELI, SELT	Vertical	137D7060AYG4
	Size 1 - 3 FVNR, FVR, 2S1W, 2S2W	3.0	SELI, SELT	Vertical	137D7060AYG5
	Feeder	1.5	SELI, SELT	Vertical	137D7060AYG8
	Feeder	1.5	SELI, SELT	Vertical	137D7060AYG20
	Size 3 FVR, 2S1W, 2S2W	3.5	SELI, SELT	Vertical	137D7060AYG6
	Size 3 FVR, 2S1W, 2S2W	4.0	SELI, SELT	Vertical	137D7060AYG7
	Size 4 FVNR	2.5	SFLT, SFLI	Vertical	137D7060AYG16
1	Size 4 FVNR	3.0	SFLT, SFLI	Vertical	137D7060AYG17
	Size 4 FVNR	3.5	SFLT, SFLI	Vertical	137D7060AYG18
	Size 4 FVNR, FVR, 2S1W, 2S2W	4.0	SFLT, SFLI	Vertical	137D7060AYG19
	Feeder	1.5	SFLT, SFLI	Vertical	137D7060AYG26
	Size 1 & 2 FVNR, Feeder	1.0	THED, TEC, TEDL	Vertical	137D7060AYG9
	Size 1 & 2 FVNR, FVR, 2S1W, 2S2W, Feeder	1.5	THED, TEC, TEDL	Vertical	137D7060AYG10
	Size 1 & 2 FVNR, FVR, 2S1W, 2S2W, Feeder	2.0	THED, TEC, TEDL	Vertical	137D7060AYG11
	Size 1 & 2 FVNR, FVR, 2S1W, 2S2W, Feeder	2.5	THED, TEC, TEDL	Vertical	137D7060AYG12
	Size 1 - 4 AF3, SSS	3.0	SELI, SELT	Vertical	137D7060AYG13
	Size 1 - 4 AF3, SSS	3.5	SELI, SELT	Vertical	137D7060AYG14
	Size 1 - 4 AF3, SSS	4.0	SELI, SELT	Vertical	137D7060AYG15

Item	Application Type	Space Height	Circuit Breaker	Mounted	Cat. No.
	Feeder	0.5	SELI, SELT	Horizontal	137D7060BDG1
	Size 3 & 4 FVNR	2.5	THED, TEDL	Horizontal	137D7060BDG12
	Feeder	1.0	TB1	Horizontal	137D7060BDG3
	Feeder	0.5	FUSIBLE SWITCH	Horizontal	137D7060BDG4
1	Feeder	1.0	FUSIBLE SWITCH	Horizontal	137D7060BDG5
	Feeder in Stab-bolt Combo	0.5	SELI, SELT	Horizontal	137D7060BDG6
	Size 4 FVNR	3.0	THED, TEDL	Horizontal	137D7060BDG7
	Feeder	1.0	THED, TEDL	Horizontal	137D7060BDG8
	Feeder	1.5	TB1	Horizontal	137D7060BDG9
	Feeder in Stab-bolt Combo	1.0	SELI, SELT	Horizontal	137D7060BDG11

Handle/Handle Assembly

Spectra Line – Handles for combination starter units, "Handle (Only)" includes plastic handle with egg-shaped knob; "Handle assembly" includes handle, egg-shaped knob, escutcheon, and steel linkage to mount on unit.

Item	Application Type	Space Height	Circuit Breaker	Cat. No.
1	Size 1& 2 FVNR	1.0	Fused Switch 100A	137D7060AZG1
	Size 1 & 2 FVNR, FVR, 2S1W, 2S2W	1.5	Fused Switch 100A	137D7060AZG2
	Size 1 & 2 FVNR, FVR, 2S1W, 2S2W	2.0	Fused Switch 100A	137D7060AZG3
	Size 1 & 2 FVNR, FVR, 2S1W, 2S2W	2.5	Fused Switch 100A	137D7060AZG4
	Size 1 & 2 FVNR, FVR, 2S1W, 2S2W	3.0	Fused Switch 100A	137D7060AZG5
	Size 1 & 2 FVNR, FVR, 2S1W, 2S2W	3.5	Fused Switch 100A	137D7060AZG6
	Size 1 & 2 FVNR, FVR, 2S1W, 2S2W	4.0	Fused Switch 100A	137D7060AZG7
	Size 3 FVNR	2.5	Fused Switch 100A	137D7060AZG11
	Size 3 FVNR	2.5	Fused Switch 100A	137D7060AZG12
	Size 3 FVNR	3.0	Fused Switch 100A	137D7060AZG13
	Size 3 FVNR	3.0	Fused Switch 100A	137D7060AZG14
	Size 3 2S1W, 2S2W	3.5	Fused Switch 100A	137D7060AZG15
	Size 3 2S1W, 2S2W	4.0	Fused Switch 100A	137D7060AZG16

Item	Application	Space Height	Circuit Breaker	Mounted	Cat. No.
1	Feeder	2.0	Fused Switch 200A	Horizontal	137D7060BFG1
	Feeder	2.5	Fused Switch 200A	Horizontal	137D7060BFG2
	Size 4 FVNR	3.0	Fused Switch 200A	Horizontal	137D7060BFG3
	Size 4 FVNR	3.5	Fused Switch 200A	Horizontal	137D7060BFG4
	Size 4 FVNR	4.0	Fused Switch 200A	Horizontal	137D7060BFG5
	Feeder in Stab-Bolt Combo	3.0	Fused Switch 200A	Horizontal	137D7060BFG6

Description	Cat. No.
Spectra Pushbutton Bracket	169C6383DNP3
Hole Plug	272A5650UWG2
Spectra Resets	
all size 1 functions	204B4142BDG1
size 2 FVNR & PW	204B4142BDG2
size 2 FVR , 2S1W, 2S2W	204B4142BDG3
size 3 & 4 FVNR, FVR, 2S1W, 2S2W	204B4142BDG4
size 3 & 4 RVNR, PW, YD	204B4142BDG5
size 5 FVNR, RVNR, FVR, 2S1W, 2S2W	204B4142BDG6
size 6 FVNR, RVNR, FVR	204B4142BDG7
Spectra Latches	273A7734G1 thru G6
Full width feeder and main doors	273A7734G3
Drawout starter units	273A7734G6
Used on size 5 & 6 starters	273A7734G8

Handle/Handle Assembly

Handles for Feeder Tap Units (Not Shown)

Item	Unit Door Height (Inches)	Handle Cat. No. 204B4050	Circuit Breaker		Fusible Disconnect	
			Type	Handle Assembly Cat. No.	Rating (Amps)	Handle Assembly Cat. No.
1A	6	RWG6	TED-THED	169C6381ABG1	30	169C6381ABG4
		RWG6	TB1	169C6381ABG1	60	169C6381ABG4
	12	RWG6	TED-THED	169C6350KEG1	30 OR 60	169C6381ABG1
		RWG6	TB1	169C6381ABG3	100	169C6381ABG1
		RWG5	TFJ-TFK	169C6381AAG1	–	
	24	FNG2	TJJ-TJK	169C6381AKG1	–	
		RWG6	–	–	200	169C6381ABG1
	30	FNG2	TB4	169C6381AKG1	–	
	42	FNG2	TKM	169C6381AKG1	–	
	48	FNG2	TB6	169C6381AKG1	200 OR 400	169C6381ABG1

For 150 ampere TED-THED circuit breaker in 12-inch space, use Catalog Number 169C6381ABG3.

Handles for Main Disconnects (Not Shown)

Item	Unit Door Height (Inches)	Handle Cat. No. 204B4050	Circuit Breaker		Fusible Disconnect	
			Type	Handle Assembly Cat. No.	Rating (Amps)	Handle Assembly Cat. No.
1B	18	WG5	TFJ-TFK	169C6381AAG1	–	–
	24	FNG2	TJJ-TJK	169C6381AKG1	–	–
	30	FNG2	TB4-TB6	169C6381AKG1	–	–
	30	RWG6	–	–	200	169C6350KGG2
	36	FNG2	TB6	169C6381AKG1	400 or 600	169C6381AKG2
	Any	FNG2	TKM	169C6381AKG1	–	–
			Spectra G-Frame	169C6381AKG1	–	–

Branch Overcurrent Protective Device

Circuit Breaker: 8000-line motor control centers utilize General Electric circuit breakers in combination starters, feeder tap units and main disconnect units. Replacement circuit breakers may be purchased through your local General Electric Distributor.

Fusible Disconnect: Modified versions of QMR and QMW switches are utilized in 8000-Line construction. When selecting the proper replacement switch, consideration must be given to the following:

1- Type of switch (QMR or QMW)

2- Size of starter, feeder or main

3- Fuse amperage and type of clip

4- Power supply voltage

Complete fusible disconnect switches consist of switch assembly, fuse clip base or base (as required), plus other factory modifications. Order by complete catalog number as listed in the tables on the following pages.

Fusible Disconnect Switches

For Starter Units (All Functions Except Part-winding, See Notes on Page 21.

Item	NEMA Size	Switch Rating (Amps)	Fuse Clips		QMR Switch Cat. No.	QMW Switch Cat. No.	Installation Kit
			Type	Rating (Amps)			
2	1	30	R	0-30	204B4053G10	204B4054G10	204B4050VEG1
			R	31-60	204B4053G11	204B4054G11	204B4050VEG1
			J	0-30	204B4053G6	204B4054G6	204B4050VEG1
			J	31-60	204B4053G7	204B4054G7	204B4050VEG1
	2	60	R	0-30	204B4053G26	204B4054G26	204B4050VEG1
			R	31-60	204B4053G27	204B4054G27	204B4050VEG1
			R	61-100	204B4053G76	204B4054G76	204B4050VEG1
			J	0-30	204B4053G19	204B4054G19	204B4050VEG1
			J	31-60	204B4053G20	204B4054G20	204B4050VEG1
			J	61-100	204B4053G74	204B4054G74	204B4050VEG1
	3①	100	R	31-60	204B4053G62	204B4054G62	204B4050VEG2
			R	61-100	204B4053G63	204B4054G63	204B4050VEG2
			R	101-200	204B4053G64	204B4054G64	204B4050VEG2
			J	31-60	204B4053G54	204B4054G54	204B4050VEG2
			J	61-100	204B4053G55	204B4054G55	204B4050VEG2
			J	101-200	204B4053G56	204B4054G56	204B4050VEG2
	4	200	R	61-100	204B4055G14	204B4056G14	204B4050VKP1 plus 272AS650BTP1
			R	101-200	204B4055G15	204B4056G15	
			R	201-400	204B4055G26	204B4056G26	
			J	61-100	204B4055G8	204B4056G8	
			J	101-200	204B4055G9	204B4056G9	
			J	201-400	204B4055G24	204B4056G24	
	5	400	R	201-400	THM3565ICD	N/A	TPBRK56A
			R	401-600	THM3566ICD	N/A	TPBRK56A
			J	201-400	THM35J5ICD	N/A	
			J	401-600	THM35J6ICD	N/A	

① For 24-inch high unit, refer to Spare Recommendations before ordering.

For Feeder Units. See Notes Below.

Item	Switch Size (Amps)	Unit Door Height (In.)	Fuse Clips Type	Fuse Clips Rating (Amps)	QMR Switch Cat. No.	QMW Switch Cat. No.	Installation Kit
2	30	6	R	0-30	204B4053G10	204B4054G10	Kit Number 1
			J	0-30	204B4053G6	204B4054G6	Kit Number 1
		12	R	0-30	204B4053G10	204B4054G10	Kit Number 2
			J	0-30	204B4053G6	204B4054G6	Kit Number 2
	60	6	R	31-60	204B4053G27	204B4054G27	Kit Number 3
			J	31-60	204B4053G20	204B4054G20	Kit Number 3
		12	R	31-60	204B4053G27	204B4054G27	Kit Number 4
			J	31-60	204B4053G20	204B4054G20	Kit Number 4
	100	12	R	61-100	204B4053G78	204B4054G78	Kit Number 5
			J	61-100	204B4053G55	204B4054G55	Kit Number 5
	200	24	R	101-200	204B4055G21	204B4056G21	Kit Number 6
			J	101-200	204B4055G19	204B4056G19	Kit Number 6
	400	48	R	201-400	THM3565ICD	N/A	Kit Number 7
			J	201-400	THM35J5ICD	N/A	Kit Number 7
	600	48	R	401-600	THM3666ICD	N/A	Kit Number 8
			J	401-600	THM36J6ICD	N/A	Kit Number 8

Fusible Disconnect Switches

For Part-winding Starter Units Only. See Notes Below.

Item	NEMA Size	Switch Rating (Amps)	Fuse Clips Type	Fuse Clips Rating (Amps)	QMR Switch Cat. No.	QMW Switch Cat. No.	Installation Kit
2	1	30	R	0-30	204B4053G10	204B4054G10	204B4050VEG1
			R	31-60	204B4053G11	204B4054G11	204B4050VEG1
			J	0-30	204B4053G6	204B4054G6	204B4050VEG1
			J	31-60	204B4053G7	204B4054G7	204B4050VEG1
	1 or 2	60	R	31-60	204B4053G27	204B4054G27	204B4050VEG1
			R	61-100	204B4053G76	204B4054G76	204B4050VEG1
			J	31-60	204B4053G20	204B4054G20	204B4050VEG1
			J	61-100	204B4053G74	204B4054G74	204B4050VEG1
	2 or 3	100	R	101-200	204B4053G52	204B4054G52	204B4050VEG2
			J	101-200	204B4053G56	204B4054G56	204B4050VEG2
	3	100	R	61-100	204B4053G78	204B4054G78	204B4050VEG2
			J	61-100	204B4053G55	204B4054G55	204B4050VEG2
	3 or 4	200	R	101-200	204B4055G21	204B4056G21	204B4050VKP1 plus 272A5650BTP1
			R	201-400	204B4055G26	204B4056G26	
			J	101-200	204B4055G19	204B4056G19	
			J	201-400	204B4055G24	204B4056G24	
	4	400	R	201-400	THM3565ICD	N/A	TPBRK56A
			R	401-600	THM3566ICD	N/A	TPBRK56A
			J	201-400	THM35J5ICD	N/A	
			J	401-600	THM35J6ICD	N/A	

For Main Switches. See Notes Below.

Item	Switch Size (Amps)	Unit Door Height (In.)	Fuse Clips Type	Fuse Clips Rating (Amps)	QMR Switch Cat. No.	QMW Switch Cat. No.	Installation Kit
2	200	30	R	101-200	204B4055G15	204B4056G15	Kit Number 9
			J	101-200	204B4055G19	204B4056G19	Kit Number 9
	400	36	R	201-400	THM3565ICD	N/A	Kit Number 7
			J	201-400	THM35J5ICD	N/A	Kit Number 7
	600	36	R	401-600	THM3666ICD	N/A	Kit Number 8
			J	401-600	THM36J6ICD	N/A	Kit Number 8

Notes For Item 2 (Fusible Disconnect Switch)

1. All switches listed are rated for 600 volts; for 250 volt applications, refer to Spare Recommendations.

2. Installation kit must be ordered and installed with the replacement switch to obtain the complete switch assembly.

3. Parts called for in individual Kit numbers must be ordered individually; do not order by kit number.

Fusible Disconnect Switches

Installation Kit-For QMR/QMW Feeder Units And Main Switches

Cat. No.	Description	Kit Number Quantity Required								
		1	2	3	4	5	6	7	8	9
TPBRK56A	Rejection Pin Kit (R)							1	1	
113A5436P1	Lug			3	3					
113A5437P1	Lug					3				
204B4050FVP1	Switch Insulator		1							
204B4050VEG1	QMR/QMW Parts Assembly		1		1					
204B4050VEG2	QMR/QMW Parts Assembly					1				
204B4050VKP1	Line Shield						1			
204B4118ACP1	Bat-wing Insulators	1		1						
204B4118ACP2	Bat-wing Insulators	1		1						
232A6981P4	Lug									3
232A6981P12	Lug								3	
264V195P1	Lug	3	3							
272A5602ESP1	Load Base Insulator		1		1					
272A5650BMP3	Line Shield	1		1						
272A5650BTP1	Line Shield Nameplate	1		1						
272A5650KYP2	Insulator									1
272A5650L1KP1	Insulator		1		1					
68J122002AW0102AJB	Line Shield							1	1	
75B125076P1	Lug						3			
75B125077G701	Lug							3		

Starter/Contactor

Item	
3	Refer to Spare Recommendations and Parts List for your motor control center. If none is available, refer to catalog number as it appears on the device itself before ordering replacement parts.

Fuse Blocks (Control Circuit)

Item			
4	With Control Power Transformer 3-Pole	Primary and Secondary	CSC # 3032GE -EDC
	Without Control Power Transformer 2-Pole (J)	Standard	CSC # 60327SJ

Control Power Transformer *(120 Volt Secondary-60 Hz)*

Item	Control Power Transformer	480 Volt Primary Cat. No.	600 Volt Primary Cat. No.
5	Size 1-FVNR/FVR (Standard) 60 VA	302A3600YDP201	Use 150 VA - Below
	Size 2-FVNR/FVR (Standard) 150 VA	302A3600YDP204	302A3600YDP226
	Size 3-FVNR/FVR (Standard) 300 VA	302A3600YDP207	302A3600YDP230
	Size 4-FVNR/FVR (Standard) 300VA	302A3600YDP207	302A3600YDP230

Control Terminal Board

Item	3 Pt. Control Terminal Board	When Used	Cat. No.
6	Male	Mounted on starter unit	75B132504G701
	Female	Mounted on vertical section	204B4153APG1
	Mounting Clip	For female board	577A285P1
	Marking Strip	3 pt- blank	272A5615P101
	Assembly	All of the above	204B4048G1
	HDTB		CR151KPP56F
	HDTB RAIL		204B4153BCP1

Item	Description	Cat. No.
7	Racking Screw (Plug-In Units Only)	273A7722P1
	Retainer (Quantity 3)	204B4139AAG36
	Cupwasher (Quantity 3)	204B4139AAG37

Item	Description	Cat. No.
8	Door Latch Assembly (1/4-turn)	169C6366DMG2

Item	Description	Cat. No.
9	Unit Frame Latch Assembly (1/4-turn)	169C6386DMG1

Slider Assembly (Inner-Outer)

Item	Slider Assembly	Cat.No.
10	Horizontally Mounted Disconnect: “E” Frame Circuit Breaker	204B4050VBG2
	"FJ-FK" Frame Circuit Breaker	204B4050VCG2
	Vertically Mounted Disconnect (‘‘E” Frame Circuit Breaker; 30-200 Amp QMR/QMW)	204B4050VAG2

Pilot Device Bracket Escutcheon

Item	Pilot Device	Cat.No.
11	Blank (No Holes)	169C6350KFP5
	4-hole	169C6350KFP4
	Plug-button Assembly (Black)	272A5650UWG2
	Plug-button Assembly (Gray)	272A5650UWG4
	Pilot Device Grounding Bracket	204B4050TTP1

Overload Reset Assembly

Item	NEMA Size	Function	Cat.No.
12	1	All	204B4142BDG1
	2	FVNR	204B4142BDG2
	2	FVR-2SIW-2S2W	204B4142BDG3
	2	RVNR	204B4142BDG1
	3 or 4	FVNR-FVR-2SIW-2S2W	204B4142BDG4
	3 or 4	RVNR	204B4142BDG5
	5	FVNR-FVR-RVNR	204B4142BDG6
	Reset Extension Only	All	204B4050WBP1

Vertical Ground Bus Stab Finger

Item	Description	Cat.No.
13	Vertical Ground Bus Stab Finger	259A3264G1

Pilot Device (Type CR104P)

Item	Description
14	Pilot Device (Type CR104P) Refer to Spare Recommendations furnished with your motor control center.

Unit Nameplate (Blank)

Item	Description	Cat. No.
15	White Face/Black Core	273A7916P3EC
	Black Face/White Core	273A7916P3FC
	Mounting Clip (2 required)	204B4139AAG5 (Qty 6)

Power Terminal Board

Item	. Style		Cat.No.
16	NEMA Size 1 and 2	Male (Mounted on starter unit)	75B132504G701
		Female (Mounted on vertical section)	204B4153APG2
		Mounting Clip (For female board)	577A285P1
		Marking Strip (3 pt.-blank)	272A5615P101
		Assembly (All of above)	204B4048G4
	NEMA Size 3 and 4	Power TB	204B4050WDG1
		Terminal Board Cover	204B4050NDP1

Harnesses

Load Wire Harness (Starter to power terminal board)

Item	Function	NEMA Size	Cat.No. (For Circuit Breaker)	Cat.No. (For Fusible Disconnect)
17	FVNR	1	8000T10G1	8000T10G2
		2	8000T6G2	8000T6G1
		3	8000T4G1	8000T4G1
		4	8000T4G1	8000T4G1
	FVR	1	8000T10G3	8000T10G3
		2	8000T6G3	8000T6G3
		3	8000T4G1	8000T4G1
		4	8000T4G1	8000T4G7
	2S1W or 2S2W	1	8000T10G4	8000T10G4
		2	8000T6G4	8000T6G4
		3	8000T4G1	8000T4G1
		4	8000T4G1	8000T4G9

Note: *Above harnesses utilize standard GE type THW (flamenol) wire cable. Do not order above catalog numbers if your motor control center was ordered with special type power wire cable.*

Item		Cat.No.
18	Line Connection Barrier 30/60/100 ampere QMR/QMW Fusible Disconnect Switches (Only)	272A5650UJP1

Item	Description	Cat.No.
19	Stab Assembly (includes Plastic Base, Cover) - no stabs	117B6219G1

Stab Power Harness (Includes harness and stab fingers)
Combination Starter Units

Item	NEMA Size	Function	Circuit Protective Device	Unit Door Height (inches)	Harness Cat.No.
20	1 or 2	FVR-2S1W-2S2W	QMR/QMW	18 or 24	8000L8G2
		FVNR	Circuit Breaker (“E”)\	12 or 18	8000L8G1
		FVNR	Circuit Breaker (‘7131”)	18	8000L8G10
		FVNR	QMR/QMW (Max 60 Amp clips)	12 or 18	8000L8G2
		FVR-2S1W-2S2W	Circuit Breaker (“E”)	18 or 24	8000L8G1
	2	FVNR	60 Amp QMR/QMW (100 Amp clips)	18	8000L8G8
		FVR	60 Amp QMR/QMW (100 Amp clips)	24	8000L8G9
	3	FVNR	Circuit Breaker (“E”)	24	8000L4G1
		FVNR	Circuit Breaker (“E”)	30	8000L4G4
		FVNR	QMR/QMW	24 or 30	8000L4G6
	3 or 4	FVNR-FVR	Circuit Breaker (“TFJ-TFK”)	30 or 36	8000L4G2
		FVNR-FVR	QMR/QMW	42 or 60	8000L4G5

Stab Power Harness (Includes harness and stab fingers)
Feeder Units/Main Disconnects

Item	Function	Rating (Amps)	Circuit Protective Device	Unit Door Height (inches)	Harness Cat.No.
20	Feeder (Horizontal)	0-50	Circuit Breaker (E-Frame TBI)	6	8000L8G7
		60-100	Circuit Breaker (E-Frame TBI)	6	8000L4G10
		110-150	Circuit Breaker (E-Frame TBI)	12	8000L4G4
		30	QMR/QMW	6	8000L8G7
		60	QMR/QMW	6	8000L6G1
		100	QMR/QMW	12	8000L4G7
	Feeder (Vertical)	0-50	Circuit Breaker (E-frame)	12	8000L8G1
		60-100	Circuit Breaker (E-frame)	12	8000L4G9
		30	QMR/QMW	12	8000L8G2
		60	QMR/QMW	12	8000L6G4
	Feeder	0-200	Circuit Breaker (TFJ-TFK)	12	8000L4G3
		200	QMR/QMW	24 or 30	8000L4G5
	Main	225	Circuit Breaker (TFJ-TFK)	18	8000L4G8
		200	QMR/QMW	30	8000L4G13

Note: *Above harnesses utilize standard type THW wire or cable. Do not order above catalog numbers if your motor control center was ordered with special type power wire/cable.*

Torque Table

Bolt Size	Copper Joints		Aluminum Joints	
	Lb-ft Min	Kg-m + Max	Lb-ft Min	Kg-m + Max
3/8 -16	12-16	1.66-2.21	11-14*	1.52-1.94
1/2- 13	30-39	4.15-5.39	24-27	3.32-3.73
2-inch (50.8) 1/2-13 Bus Splice Plate	24-27*	3.32-3.73	24-27*	3.32-3.73
4-inch (101.6 mm) 3/8-16	11-14*	1.52-1.94	11-14*	1.52-1.94
Bus Splice Plate 1/2-13	24-27*	3.32-3.73	24-27*	3.32-3.73
Special Incoming 1/2-13 Line Main Lug "T" Bolt	25-30	3.46-4.15	–	–

For further information call or write your local GE Industrial Systems Sales Office or
General Electric Company
PO Box 489
Mebane, NC 27302
919-563-7449

GE Industrial Systems

General Electric Company
www.GEindustrial.com
© 2001 General Electric Company

GEF-4628B 1001

16442 Motor Control Equipment
Add to Existing MCC3E

GE Motor Control Centers

Proposal Nbr : 6N5-WENAT
Requisition Nbr :

Job: WENATCHEE
Catalog Number: MA1U1AB1H003A;
12" Size 1 FVNR 3 Hp SELI C/B Disc.

Item No: 1 Pg: 1-1
Date : 01-10-2012

Fastrac Elementary Image

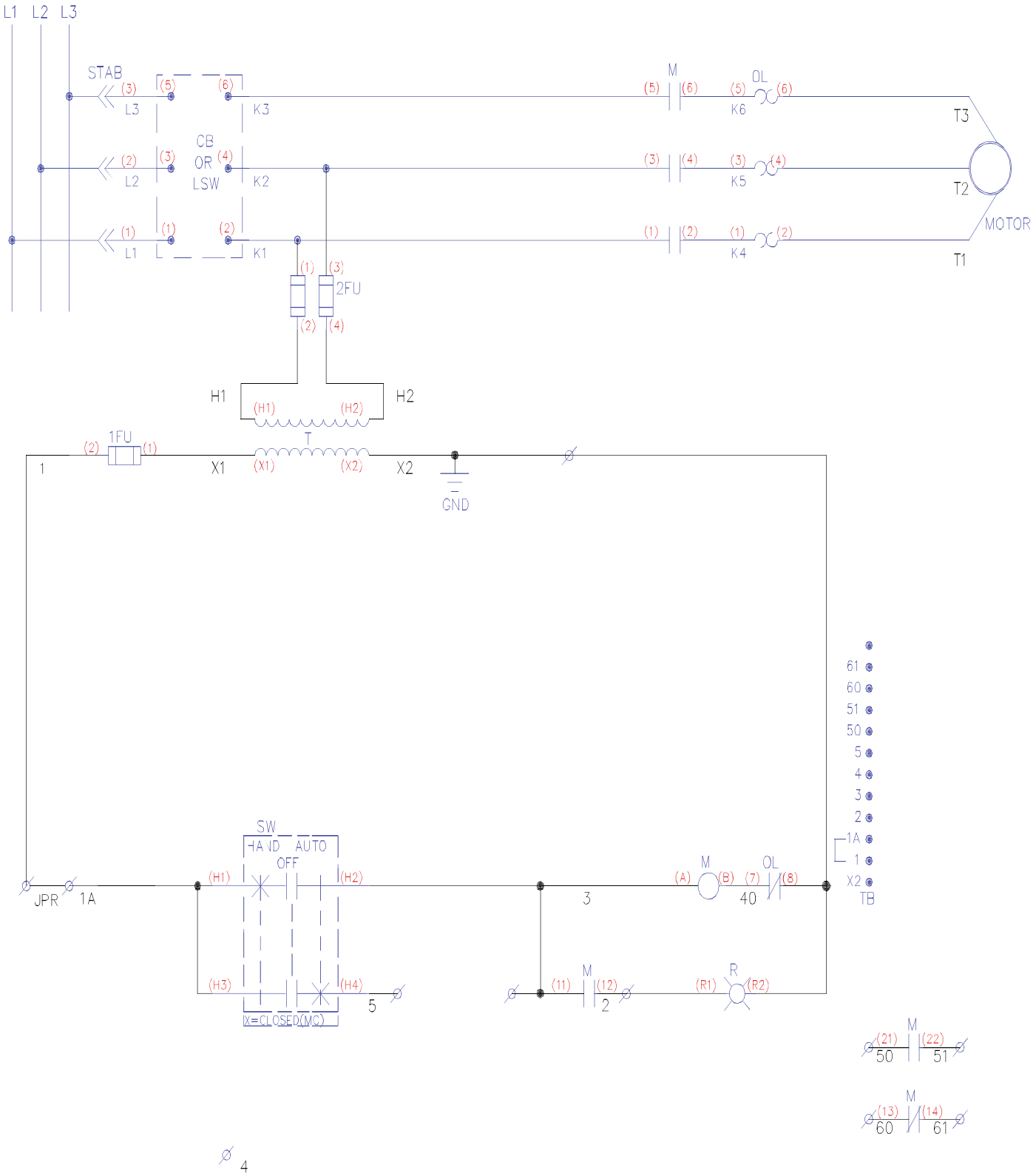

16442 Motor Control Equipment
Add to Existing MCC3E

GE Motor Control Centers

Proposal Nbr : 6N5-WENAT
Requisition Nbr :

Job: WENATCHEE
Catalog Number: MA3U1AB3H030A;
24" Size 3 FVNR 30 Hp SELI C/B Disc.

Item No: 1 Pg: 1-1
Date : 01-10-2012

Fastrac Elementary Image

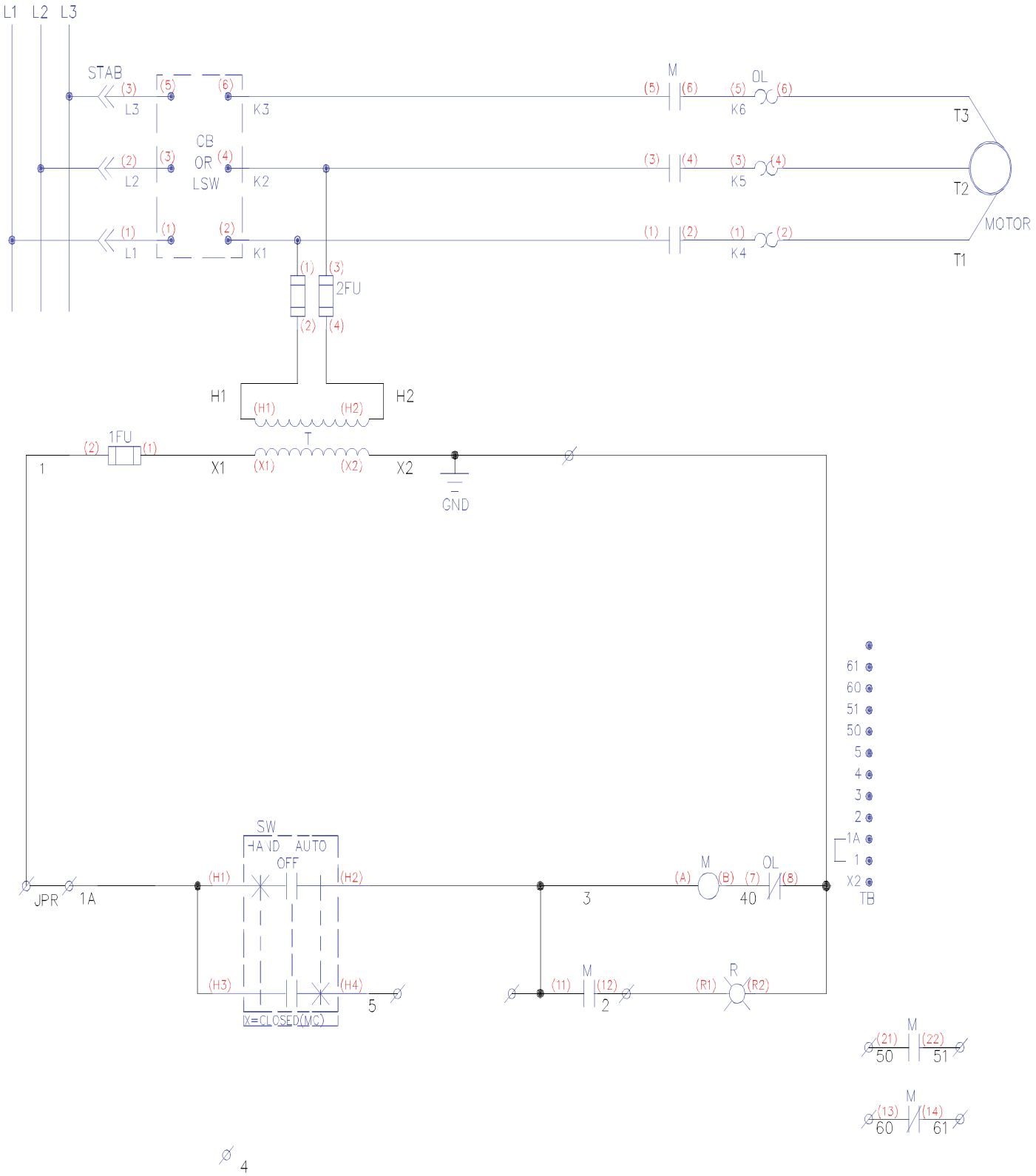

Specification Section 16460

Dry Type Transformers

Transformers General Information

Types QB, QMS, QL, and TransforMore® 600 Volts and Below

The complete family of tranformers from GE provide quiet, reliable transformer operation.

All of the dry-type tranformers through 1000 KVA are UL listed under the requirements of Standard 506 and 1561. In addition each transformer meets the requirements of NEMA ST-20, 1992. Type QB and QMS models are C-UL listed.

General-purpose transformer are rated 600 volts and below for supplying appliance, lighting and power loads from electrical distribution systems. Standard distribution voltages are 600, 480 and 240 volts; standard load voltages are 480, 240, 208 and 120 volts. The transformer is used to obtain the load voltage from the distribution voltage. Since no vaults are required for installation these tranformers can be located right at the load to provide the correct voltage for the application. This eliminates the need for long, costly, low-voltage feeders.

Construction

Types QB and QMS

Core and Coils are contained within a NEMA 3R nonventilated weatherproof enclosure. Type QB and QMS units feature encapsulated core and coils.

Type QL

Units are enclosed in a NEMA 2 drip-proof metal enclosure with natural-draft ventilation. Core-and-coil assembly is mounted on rubber isolation pads to reduce noise. Weathershield kits are available for conversion to a NEMA 3R enclosure suitable for outdoor service. **All QL TP-1 model part number begin with 9T8.**

TransforMore®

Units utilize fan assisted cooling to achieve reduced size and improved efficiency. These units incorporate an audible alarm and shunt activated disconnect switch for improved safety. Weathershields are available to convert to NEMA 3R enclosure for outdoor service. **All TransforMore® TP-1 model part numbers begin with 9T4.**

Voltage Tap Arrangement

Transformer taps compensate for high or low line voltages. Standard NEMA, ANSI three-phase taps are two 5 percent taps below normal on transformers smaller than 30 KVA. This arrangement provides a 10 percent range of tap voltage adjustment.

Most standard QL units rated 15 through 500 KVA have availalbe six universal voltage taps-four 2 1/2 percent below normal and two 2 1/2 percent above normal. This arrangement provides a 15 percent range of tap voltage adjustment.

Temperature Class

Industry standards classify insulation systems in accordance with the rating system shown below.

Insulation system classification

Ambient	+ Winding Rise	+ Hot Spot	= Temp. Class
40°C	55°C	10°C	105°C
40°C	80°C	30°C	150°C
40°C	115°C	25°C	180°C
40°C	150°C	30°C	220°C

All standard general-purpose, GE tranformers meet all applicable NEMA, ANSI, UL and IEEE standards.

The design life of transformers having different insulation systems is the same, since the allowable temperature rise of an insulation material system is predicated on a specified life for all insulation. The lower temperature systems are designed for the same life as higher temperature systems.

Sound Levels

All general-purpose transformers are as quiet, or quieter than the 1986 ANSI and NEMA standards for sound levels. Average sound levels are warranted not to exceed the values listed for each load rating shown in the adjacent table. Sound characteristics vary between transformers of identical voltage and KVA rating. The range of variation may be 4 to 8 decibles.

These values apply only to specified test conditions because the characteristic of the installation can cause them to be higher under operating conditions. Where acoustical noise is deemed to be of unusual concern, proper steps should be taken during installation to minimize audible noise transmission.

TransforMore® sound levels are 54 dB when fans are off and operating at less than 50% rated load and 65 dB when fans are operating.

Sound Levels (Decibels)[1] for 150°C Rise Models

KVA	Sound Levels
0 - 9	40
10 - 50	45
51 - 150	50
151 - 300	55
301 - 500	60

[1]Measure per ANSI C89 2-1986.

Termination

Improved termination spacing and wiring compartment room gives greater flexibility in selecting various UL listed connectors for either copper or aluminium cable. A listing of suitable connectors is packaged with each GE tranformer.

Transformer

Catalog Number TYPE QL

9T83B3873

45.0 KVA **60 HZ** **3 PH 5.9 % IMP**

40 C AMB. 150 C RISE 220 C SYSTEM **IS-19C**

PRIMARY (H) 480 VOLTS (LINE-LINE)
SECONDARY (X) 208 VOLTS (LINE-LINE)
120 VOLTS (LINE-NEUTRAL)

ELECTROSTATIC GROUND SHIELD IN EACH PHASE

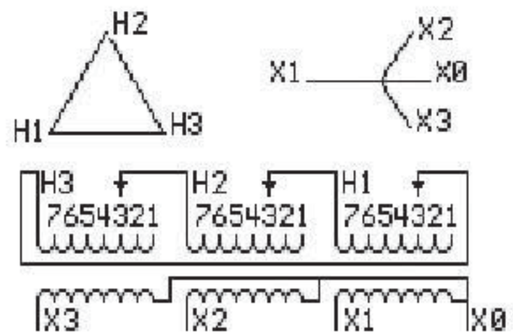

JUMPER CONNECTION

TAP	VOLTS
1	503
2	492
3	480
4	469
5	455
6	443
7	432

COIL TAP ARRANGEMENT

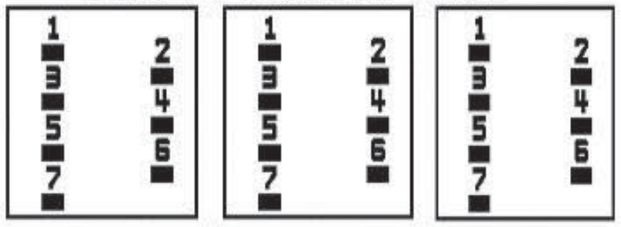

LISTED
POWER XFRM
769G

12336

Assembled in Mexico

1M0000000

2M0000000

2M0000000

ENCLOSURE TYPE 2 (IP30). RAINPROOF TYPE 3R ENCLOSURE (IP32) WHEN PROVIDED SHIELD 9T16Y4317G05

Outline: 303B401AAP073

INSPECTION & FINAL TEST
N835&

BEFORE HANDLING, INSTALLING AND OPERATING, SEE INSTRUCTION 475A667AAP001

ALUMINUM CONDUCTOR PRIMARY: 10 KV BIL SECONDARY: 10 KV BIL

082608

IN ACCORDANCE WITH NEC SECTION 450-9, ALLOW AT LEAST SIX INCHES CLEARANCE FOR VENTILATION. CHECK ADDITIONAL NEC AND LOCAL CODES.

NETWGT
45 LB

GE Consumer & Industrial **NEMA CLASS AA DRY TYPE TRANSFORMER** **Meets TP-1 1996 efficiency**

GENERAL ELECTRIC

DRY TYPE TRANSFORMERS

NOTES:

1) ALL UNITS ARE UL LISTED AND ARE DESIGNED IN ACCORDANCE WITH ANSI C89.2 AND NEMA ST-20 STANDARDS.
2) TRANSFORMERS UTILIZE A UL RECOGNIZED 220°C INSULATION SYSTEM. THE TEMPERATURE RISE(S) FOR THE SPECIFIC kVA RATINGS REFERENCED IN THE TABLE BELOW ARE DETERMINED WHEN THE TRANSFORMER IS MOUNTED IN A STANDARD ENCLOSURE.
3) TRANSFORMERS ARE DESIGNED FOR FLOOR MOUNTING. OPTIONAL WALL MOUNTING BRACKETS ARE AVAILABLE FOR THE TRANSFORMER SIZES REFERENCED IN THE TABLE BELOW.
4) TRANSFORMERS ARE DRY TYPE, CLASS AA, WITH VENTILATED ENCLOSURES FOR INDOOR USE. OPTIONAL RAINSHIELD KITS ARE AVAILABLE TO ADAPT ALL SIZES FOR TYPE 3R OUTDOOR USE WITHOUT VOIDING THE WARRANTY.
5) APPLICABLE WHEN OPTIONAL RAINSHIELDS ARE INSTALLED. RAINSHIELDS ARE SHIPPED IN KITS FOR FIELD INSTALLATION.
6) CABLE ENTRANCE IS PERMITTED THROUGH THE LEFT SIDE, RIGHT SIDE AND/OR BOTTOM ENCLOSURE PANELS ONLY. CABLE ENTRANCE IS NOT PERMITTED THROUGH THE FRONT, REAR OR TOP PANELS.
7) 0.406" DIA HOLES ARE PROVIDED FOR CUSTOMER TERMINATION.
8) FOR LIFTING, OTHER THAN WITH A FORK TRUCK, REMOVE TOP COVER AND USE 1" DIAMETER HOLES IN THE TOP CORE CLAMPS.
9) PAINT COLOR IS ANSI #61 GRAY.
10) 6" MINIMUM CLEARANCE IS REQUIRED FROM ALL WALLS.

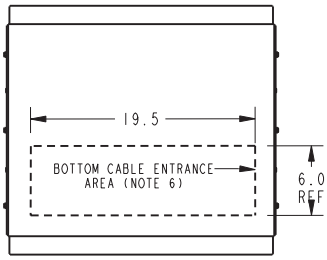

TOP VIEW

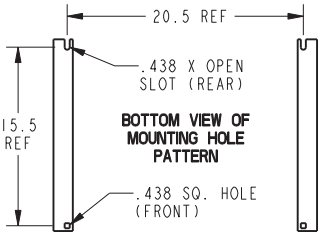

SECTION Z-Z

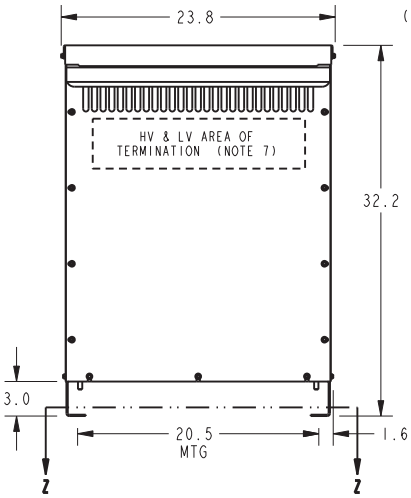

FRONT VIEW

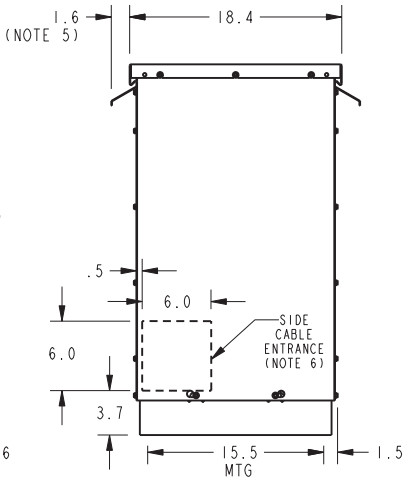

SIDE VIEW

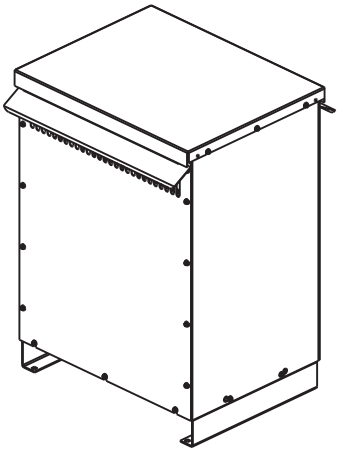

ISOMETRIC VIEW

TYPICAL kVA RATINGS AND TEMPERATURE RISES					
COIL	REF. kVA AT			WEIGHT LBS. (APPROX.)	dB LEVEL
	150°C RISE	115°C RISE	80°C RISE		
ALUMINUM	45	45	30	415	45
COPPER	45	45	30	490	

QTY.	COIL CONDUCTOR	kVA	TEMP RISE	VOLTAGE		TAPS
				PRIMARY	SECONDARY	

CUSTOMER	UNLESS OTHERWISE SPECIFIED ALL DIMENSIONS ARE IN INCHES	GENERAL ELECTRIC COMPANY GE Consumer & Industrial
JOB NAME	THIRD ANGLE PROJECTION	OUTLINE DRAWING (ENCLOSED UNIT) TP1, 3 PHASE
LINE #		
DESIGNATION		CATALOG NO. 9T83B3873 — REV. 3
DRW NO. 303B401AAP073	SHEET 1 OF 3	

GENERAL ELECTRIC

DRY TYPE TRANSFORMERS

NOTES:

1) ALL UNITS ARE UL LISTED AND ARE DESIGNED IN ACCORDANCE WITH ANSI C89.2 AND NEMA ST-20 STANDARDS.
2) TRANSFORMERS UTILIZE A UL RECOGNIZED 220°C INSULATION SYSTEM. THE TEMPERATURE RISE(S) FOR THE SPECIFIC kVA RATINGS REFERENCED IN THE TABLE BELOW ARE DETERMINED WHEN THE TRANSFORMER IS MOUNTED IN A STANDARD ENCLOSURE.
3) TRANSFORMERS ARE DRY TYPE, CLASS AA, FOR INDOOR USE.
4) 0.406" DIA HOLES ARE PROVIDED FOR CUSTOMER TERMINATION.
5) FOR LIFTING, OTHER THAN WITH A FORK TRUCK, USE 1" DIAMETER HOLES IN THE TOP CORE CLAMPS.
6) BASE PAINT COLOR IS ANSI #61 GRAY.
7) 6" MINIMUM CLEARANCE IS REQUIRED FROM ALL WALLS.

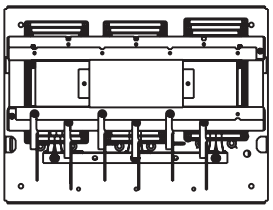

TOP VIEW

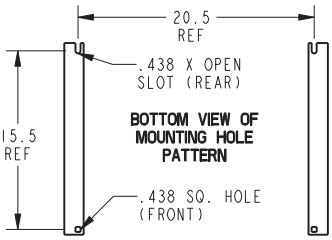

SECTION Z-Z

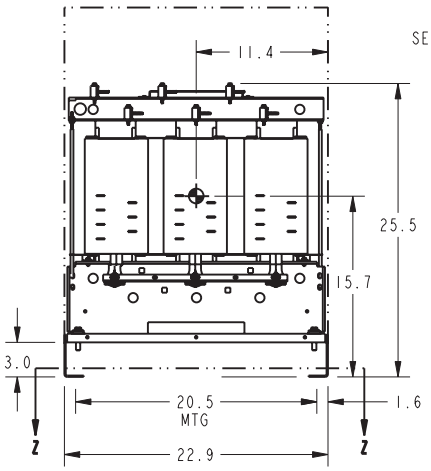

FRONT VIEW

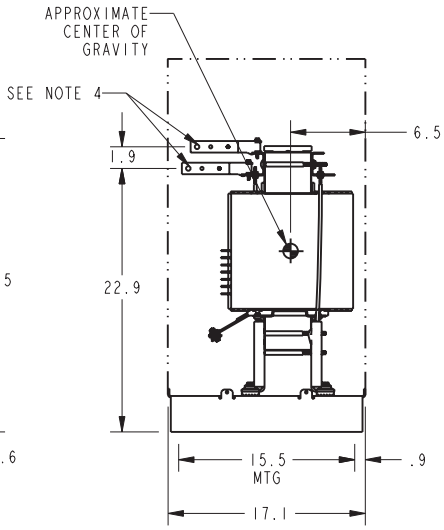

SIDE VIEW

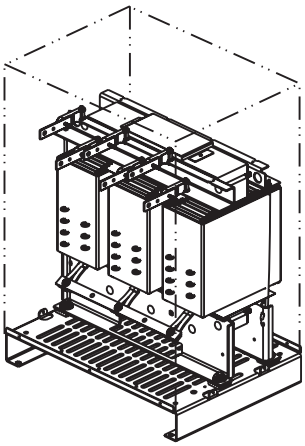

ISOMETRIC VIEW

TYPICAL kVA RATINGS AND TEMPERATURE RISES					
COIL	REF. kVA AT			WEIGHT LBS. (APPROX.)	dB LEVEL
	150°C RISE	115°C RISE	80°C RISE		
ALUMINUM	45	45	30	369	45
COPPER	45	45	30	444	

QTY.	COIL CONDUCTOR	kVA	TEMP RISE	VOLTAGE		TAPS
				PRIMARY	SECONDARY	

CUSTOMER	UNLESS OTHERWISE SPECIFIED ALL DIMENSIONS ARE IN INCHES	GENERAL ELECTRIC COMPANY GE Consumer & Industrial
JOB NAME	THIRD ANGLE PROJECTION	OUTLINE DRAWING (CORE & COIL UNIT WITH BASE) TP1, 3 PHASE
LINE #		
DESIGNATION		CATALOG NO. 9T83B3873 — REV. 3
DRW NO. 303B401AAP073	SHEET 2 OF 3	

GENERAL ELECTRIC

DRY TYPE TRANSFORMERS

NOTES:

1) ALL UNITS ARE UL LISTED AND ARE DESIGNED IN ACCORDANCE WITH ANSI C89.2 AND NEMA ST-20 STANDARDS.
2) TRANSFORMERS UTILIZE A UL RECOGNIZED 220°C INSULATION SYSTEM. THE TEMPERATURE RISE(S) FOR THE SPECIFIC kVA RATINGS REFERENCED IN THE TABLE BELOW ARE DETERMINED WHEN THE TRANSFORMER IS MOUNTED IN A STANDARD ENCLOSURE.
3) TRANSFORMERS ARE DRY TYPE, CLASS AA, FOR INDOOR USE.
4) 0.406" DIA HOLES ARE PROVIDED FOR CUSTOMER TERMINATION.
5) FOR LIFTING, OTHER THAN WITH A FORK TRUCK, USE 1" DIAMETER HOLES IN THE TOP CORE CLAMPS.
6) 6" MINIMUM CLEARANCE IS REQUIRED FROM ALL WALLS.

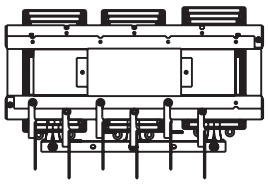

TOP VIEW

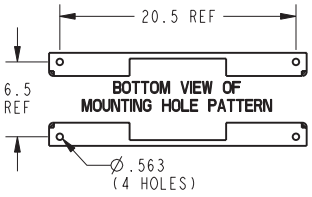

SECTION Y-Y

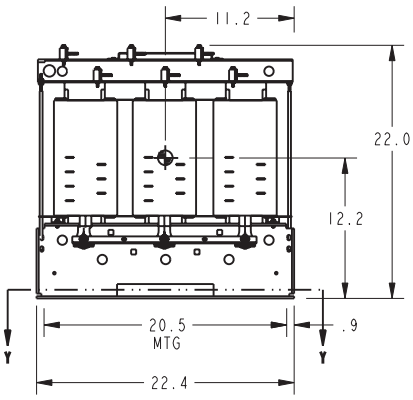

FRONT VIEW

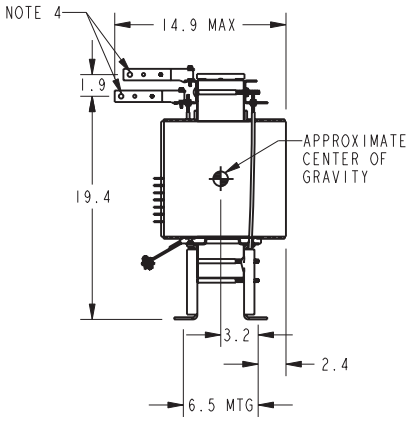

SIDE VIEW

TYPICAL kVA RATINGS AND TEMPERATURE RISES					
COIL	REF. kVA AT			WEIGHT LBS. (APPROX.)	dB LEVEL
	150°C RISE	115°C RISE	80°C RISE		
ALUMINUM	45	45	30	369	45
COPPER	45	45	30	444	

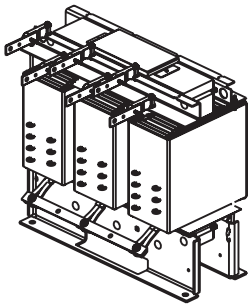

ISOMETRIC VIEW

QTY.	COIL CONDUCTOR	kVA	TEMP RISE	VOLTAGE		TAPS
				PRIMARY	SECONDARY	

CUSTOMER	UNLESS OTHERWISE SPECIFIED ALL DIMENSIONS ARE IN INCHES	GENERAL ELECTRIC COMPANY GE Consumer & Industrial
JOB NAME	THIRD ANGLE PROJECTION	OUTLINE DRAWING (CORE & COIL UNIT WITHOUT BASE) TP1, 3 PHASE
LINE #		
DESIGNATION		CATALOG NO. 9T83B3873 — REV. 3
DRW NO. 303B401AAP073	SHEET 3 OF 3	

Specification Section 16490

Overcurrent and Short Circuit Protection

GE Energy
Industrial Solutions

Circuit Breakers,Molded Case Circuit Breakers

Product #: SFPA36AT0250
Short Description: SFP 3P 600V 250A

SPECIFICATIONS

Category	Spectra RMS™ Electronic Trip
Product Line	Spectra RMS - Standard
Trip Style	Interchangeable
Frame Type	SF250
Amperage	100A , 110A , 125A , 150A , 175A , 200A , 225A , 250A , 70A , 90A
Poles	3
System Voltage	120 Vac , 120/240 Vac , 240 Vac , 277 Vac , 480 Vac , 600 Vac
120 Vac Interrupting Rating	200 KAIC
120/240 Vac Interrupting Rating	200 KAIC
240 Vac Interrupting Rating	200 KAIC
277 Vac Interrupting Rating	100 KAIC
480 Vac Interrupting Rating	100 KAIC
600 Vac Interrupting Rating	25 KAIC
Trip Function	LSI
Continuous Current Rated	Standard
Suitable for Reverse Feed	Yes
Lugs	TCAL29
Long Time	Fixed
Short Time	Adjustable
Instantaneous	Adjustable
Current Metering	No
Protective Relays	No
Special Markings	HACR
UL File #	E11592
CSA File#	LR40350
GSA Compliance	No
GO Schedule	135S
UPC	078316421160
List Price	$3490

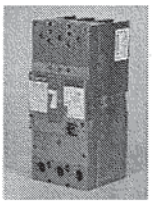

Spectra RMS Molded Case Circuit Breakers (SE150, SF250, SG600 and SK1200) have a digital, solid state, RMS sensing trip system with field installable, front-mounted rating plugs to establish or change the breaker ampere rating. Adjustable instantaneous with tracking short-time is standard on all frames. The trip system uses digital sampling to determine the RMS value of sinusoidal and non-sinusoidal currents.

WORLDWIDE PARTNER

Specification Section 16491

Low Voltage Surge Suppression

GE Digital Energy
Power Quality

INSTALLATION, OPERATION AND MAINTENANCE MANUAL

GE TRANQUELL® Enhanced Thermal Protection (ETP) Series
Wall Mounted Medium and High Exposure
Surge Protective Devices (SPDs)

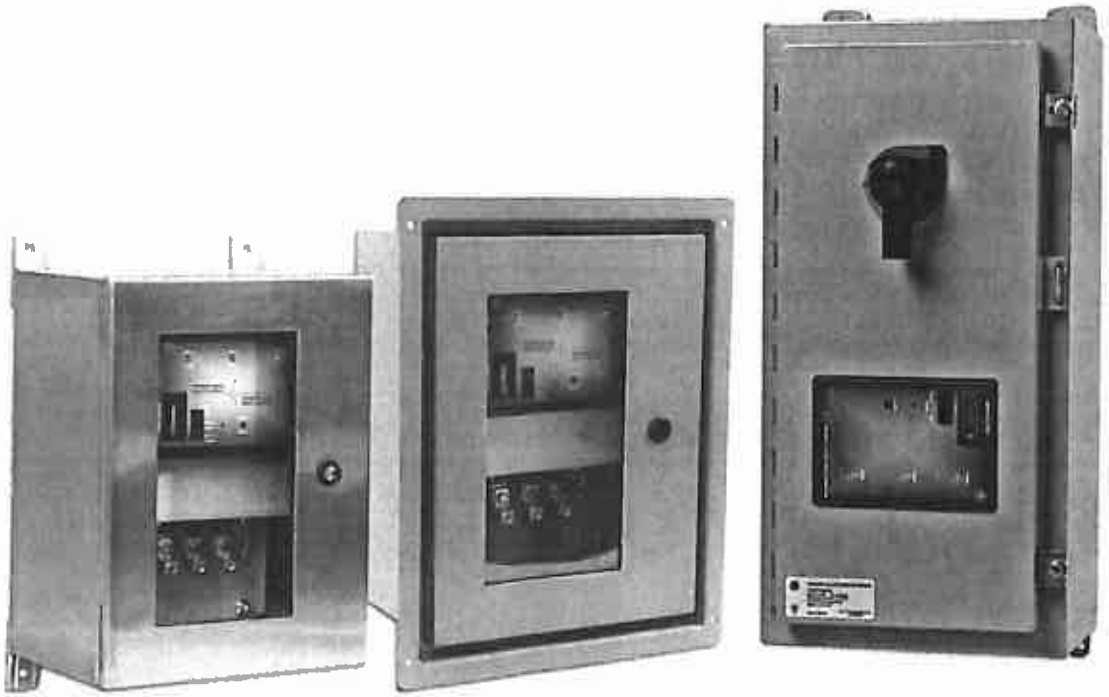

TABLE OF CONTENTS

IMPORTANT NOTICE....3
Transformer X0 Bond Warning Statement....3
PRODUCT DESCRIPTION....4
APPLICATION GUIDELINES....4
SPD Type....4
Maximum Continuous Operating Voltage (MCOV)....5
Electrical System Configuration....5
Peak Impulse Rating....5
UL 1449 Nominal Discharge Current (In)....5
Short Circuit Current Rating....5
Environmental Ratings....5
PRE-INSTALLATION REQUIREMENTS....6
System Configuration and Voltage....6
System Grounding and Bonding....6
SPD Installation on Ungrounded Power Systems....6
SPD Location / Primary Overcurrent Protection....7
VOLTAGE RATINGS AND POWER SOURCE CONFIGURATIONS....7
NEC COMPLIANT GROUNDING AND BONDING EXAMPLE....8
INSTALLATION....9
Mounting....9
Dimensions and Recommended Conduit Entry Locations....9
INSTALLATION (cont.)....12
Power Connections....12
Wire Routing....12
Circuit Breaker....12
Remote Alarm Contacts....12
SPD Disconnect Switch....12
Pre-Energization Check....12
POWER TERMINALS AND REMOTE ALARM LOCATION DIAGRAM....13
INSTALLATION EXAMPLE DIAGRAM....14
OPERATION....15
Line Status Indicators....15
Alarm Status Indicators....15
Remote Alarm Contacts....15
Test / Enable / Disable Switch....15
Surge Counter LCD....15
MAINTENANCE....16
SERVICING / TROUBLESHOOTING....16

IMPORTANT NOTICE

THE ENTIRE CONTENT OF THIS MANUAL MUST BE READ AND FULLY UNDERSTOOD BEFORE ATTEMPTING ANY INSTALLATION OR ENERGIZATION OF THE SPD.

If there are any questions about the operational status, or integrity of the electrical system prior to installation of the SPD, please consult a qualified trained electrician before attempting to continue.

If the minimum requirements of this manual are not followed, the SPD could become irreversibly damaged, and/or the electrical system and connected loads could be left unprotected.

Choosing the right product for the application, along with correct installation methods, as defined within this manual, will allow the GE Tranquell SPD to provide the best possible protection for many years.

Failure to comply with the applicable requirements of this manual can void the SPD warranty.

WARNING

SPECIAL ATTENTION MUST BE GIVEN TO VERIFY THAT A PROPER NEUTRAL-GROUND (XO) BOND HAS BEEN MADE WHEN POWER IS SUPPLIED FROM AN UPSTREAM TRANSFORMER OR ANY OTHER TYPE OF SEPARATELY DERIVED POWER SOURCE.

FAILURE TO PROVIDE THIS BOND, AS REQUIRED PER ARTICLE 250.30 OF THE NATIONAL ELECTRICAL CODE, CAN RESULT IN ELEVATED PHASE TO GROUND SOURCE VOLTAGE POTENTIALS. THESE VOLTAGES CAN CAUSE DAMAGE TO ELECTRICAL EQUIPMENT AS WELL AS SAFETY HAZARDS INCLUDING FIRE, ELECTRICAL SHOCK, SERIOUS INJURY, OR DEATH.

PRODUCT DESCRIPTION:

GE Tranquell Enhanced Thermal Protection (ETP) Series Type 1 and Type 2 Surge Protective Devices (formerly called TVSS), are designed for installation on low voltage electrical distribution systems. GE SPDs are designed to protect electrical equipment loads against the damaging effects of transient voltages that can be induced or generated as a result of remote lightning, power equipment switching or high frequency disturbances.

All GE Tranquell ETP Series SPDs incorporate Metal Oxide Varistor (MOV) technology to achieve superior transient suppression performance. Integral to each MOV is a unique Thermal Protection System that provides effective circuit interruption in the event of an abnormal phase overvoltage condition. Other standard features include protection status indicating lights, an audible alarm with test and disable features, form C alarm contacts for remote monitoring, a surge event counter, and built in EMI filtering. A surge rated disconnect switch is provided on select models.

The GE Tranquell SPD units described in this manual are enclosed, wall mounted styles that are UL/cUL Listed, conforming to UL 1283 and UL 1449 3rd Edition where applicable. All published ratings are in accordance with ANSI / IEEE C62.41.1-2002, C62.41.2-2002 and NEMA LS1-1992 (R2000) recommended guidelines.

Model covered by this manual are:

GE Tranquell TPME and TPHE, UL Type 2 model types ending with the part number suffix of WMN1, WMN12S, WMN12F, WMN4, WMN4S , or WMN4X . (Example: TPHE277Y20WMN12S)
Model types are also available in a UL Type 1 rating. These models will be labeled with part number suffixes of WMN1T1, WMN12ST1, WMN12FT1, WMN4T1, WMN4ST1 , or WMN4XT1.

APPLICATION GUIDELINES:

Determining the surge protection to be provided in a facility or for a particular system or equipment can be a complex task that should be addressed as early as possible. This is typically when a new facility is constructed or sensitive electronic equipment has been installed. The following guidelines are offered for application assistance:

- Prior to installing any SPD, ensure that your facility electric supply system is properly installed and connected in accordance with all applicable national and local codes and safety procedures. All equipment and systems should be installed in accordance with manufacturer's instructions.
- Utilize the personnel from your local utility, your engineering department, GE application or service engineering, or a professional consulting engineering firm for technical guidance or troubleshooting.
- Understand your system, and the capabilities and limitations of SPD and other power conditioning equipment.
- Select the proper GE Tranquell Series SPD unit for your system voltage, configuration, and the anticipated surge environment. Some of the key parameters for selection are defined below:
  - SPD TYPE
    The SPDs covered in this document are rated and marked accordingly for use on Type 1 or Type 2 applications. Type 1 SPDs can be installed on either line or load side of the electrical distribution system's main breaker or fuse. Type 2 SPDs can be installed only on the load side.

- **MAXIMUM CONTINUOUS OPERATING VOLTAGE (MCOV)**
  This value defines the maximum line-to-line or line-to-neutral continuous AC voltage that can be safely applied to the protector. MCOV levels for GE Tranquell Series SPDs are set at 115% of nominal system voltage. For 120-volt AC systems, the MCOV is 125%. If there is a risk that the electrical system voltage could exceed MCOV, or if any unusually high power frequencies, Temporary Over Voltages (TOV), or phase swells are anticipated, contact your GE Sales Engineer for further assistance.

- **ELECTRICAL SYSTEM CONFIGURATION**
  Protectors are available for single (split) phase with neutral and ground, three-phase grounded WYE, three-phase ungrounded WYE, three-phase high-leg delta, and for three-phase ungrounded delta systems. (See page 7 for power source configurations)

- **PEAK IMPULSE RATING**
  Peak surge current capability is an important characteristic for a SPD. The rating per mode should equal or exceed the maximum surge expected in service. GE Tranquell wall mount SPDs are available in maximum surge ratings of 65kA, 80kA, 100kA, 125kA, 150kA, 200kA and 300kA.

- **UL 1449 NOMINAL DISCHARGE CURRENT (In)**
  The UL Nominal Discharge Current (In) rating should be considered when an SPD is selected for use within a UL96A Lightning Protection System. UL96A requires a Nominal Discharge Current (In) rating of 20kA for Type 1 or Type 2 SPDs.

- **SHORT CIRCUIT CURRENT RATING**
  GE Tranquell ETP Series SPD units are UL certified for use on electrical systems with rated ampacities up to 200,000 symmetrical amperes maximum.

- **ENVIRONMENTAL RATINGS**
  NEMA Ratings of 1, 4, 4X, and 12 are available. Please refer to the model number suffix to verify the correct enclosure for the application. The SPD is designed to operate within an ambient temperature range of -40°C to 65°C (-40°F to 149°F) with a relative humidity level between 0-95% non-condensing.

➢ A direct lightning strike, that occurs within close proximity of an installed SPD, can result in surge currents that exceed the SPD's energy handling capability. This can result in reduced life expectancy or pre-mature failure of the SPD. Electrical power system supply voltages in excess of the SPD MCOV rating, can also cause SPD failure.

➢ Should a condition occur that results in premature failure of the SPD, the suppression circuitry will short, thereby allowing the integral SPD fusing to interrupt current flow without disrupting power to the connected loads. However, after SPD failure, the load equipment will remain unprotected from subsequent surge activity until the SPD is replaced.

➢ Increased rate of rise or higher surge current magnitudes can result in increased surge let-thru levels due to the non-linear clamping characteristics of SPDs. Conditions can occur where the surge withstand capability of the protected equipment is exceeded even though the SPD is functioning properly. In such cases, additional SPDs may be required, located closer to the sensitive load(s). (For additional information, refer to Standard IEEE 1100-2005, Section 3.4.3)

➢ GE Tranquell ETP Series WYE-connected SPDs have both **normal mode** (L-N, L-L) and **common mode** (L-G, N-G) protection. Protection between neutral and ground is provided on units designed for WYE-connected applications.

WARNING

THE EQUIPMENT COVERED BY THESE INSTRUCTIONS SHOULD BE INSTALLED AND SERVICED ONLY BY COMPETENT, QUALIFIED PERSONNEL UTILIZING PROPER SAFETY PRACTICES AND PROCEDURES THESE INSTRUCTIONS ARE WRITTEN FOR SUCH PERSONNEL AND ARE NOT INTENDED AS A SUBSTITUTE FOR ADEQUATE TRAINING AND EXPERIENCE IN SAFE PROCEDURES FOR THIS TYPE OF EQUIPMENT.

PRE-INSTALLATION REQUIREMENTS:

Prior to energization of the GE Tranquell SPD, it is critical that the following items have been addressed.

DO NOT ATTEMPT TO ENERGIZE THE SPD OR CONTINUE WITH THE INSTALLATION IF ALL OF THESE CONDITIONS HAVE NOT BEEN MET, OR ARE UNKNOWN.

1. **SYSTEM CONFIGURATION AND VOLTAGE**
   Check the configuration and voltage supply ratings to ensure that the proper SPD model number has been selected for your system. The SPD model number can be found on the UL label affixed to the SPD NEMA Enclosure. The SPD selection can be verified by comparing the Model Number to the correct electrical system described in the "VOLTAGE RATINGS & POWER SOURCE CONFIGURATIONS" chart shown on page 7.

2. **SYSTEM GROUNDING AND BONDING**
   Verify that a NEC (National Electrical Code) compliant X0 bond has been made at the upstream transformer or other separately derived system that feeds the SPD. Per NEC Article 250.30, this bond must be in place on all 3-Phase WYE, 3-Phase Hi-Leg Delta, and Single Phase Split-Systems. Refer to page 8 for an example of an installation that complies with these NEC recommendations.

WARNING

FAILURE TO PROVIDE THE X0 BOND WILL DAMAGE THE SPD AND VOID THE PRODUCT WARRANTY.

Verify that there have not been multiple instances of Neutral to Ground bonds on the electrical system. These bonds, while either intentional or accidental, result in Ground currents that can create differential voltage potentials between Neutral and Ground. Redundant Neutral to Ground connections can result in damage to the SPD and are in violation of NEC.

3. **SPD INSTALLATION ON UNGROUNDED POWER SYSTEMS**
   Ungrounded power systems are inherently unstable and can produce excessively high line-to-ground voltages during certain fault conditions. During these fault conditions any electrical equipment, including an SPD, may be subjected to voltages which exceed their designed ratings. This information is being provided to the user so that an informed decision can be made before installing any electrical equipment on an ungrounded power system.

4. **SPD LOCATION / PRIMARY OVERCURRENT PROTECTION**
   Per the National Electrical Code (NEC Article 285), Type 1 SPDs may be placed on either side of the main service breaker or fuse (line or load) without the need for supplemental overcurrent protection. Type 2 SPDs are allowed to be placed on the load side only.

VOLTAGE RATINGS & POWER SOURCE CONFIGURATIONS

TRANQUELL MODEL	NOMINAL VOLTAGE (50/60Hz)	MAXIMUM CONTINOUS OPERATING VOLTAGE (MCOV)	SYSTEM TYPE	SOURCE CONFIGURATION
TPME / TPHE 120S	120 / 208-240V	150V (L-N / L-G)	Single Phase 3 Wire + Ground	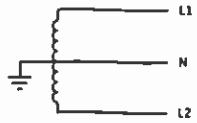
			Dual Phase 3 Wire + Ground	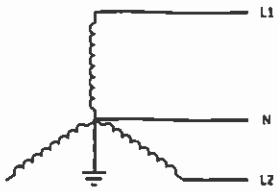
TPME / TPHE 120Y TPME / TPHE 220Y TPME / TPHE 240Y TPME / TPHE 277Y TPME / TPHE 347Y	120 / 208V 220 / 380V 240 / 415V 277 / 480V 347 / 600V	150V (L-N / L-G) 320V (L-N / L-G) 320V (L-N / L-G) 320V (L-N / L-G) 420V (L-N / L-G)	Three Phase WYE, 4 Wire + Ground	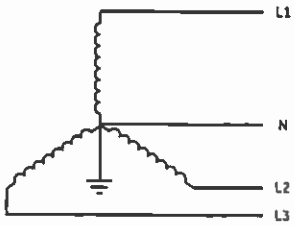
TPME / TPHE 240D TPME / TPHE 480D	240V 480V	270V (L-G) 550V (L-G)	Three Phase Delta, 3 Wire	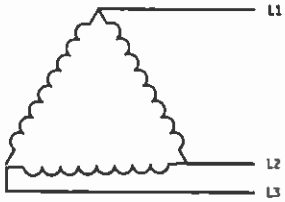
			Three Phase WYE, 3 Wire	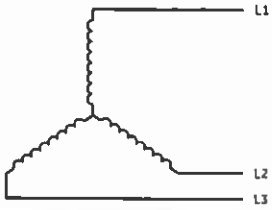
TPME / TPHE 240H	120 / 240V	150V (L-N / L-G) Phase A & C 270V (L-N / L-G) Phase B	Three Phase Delta Hi-Leg, 4 Wire + Ground	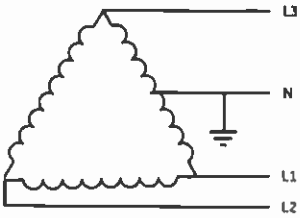

Example of an NEC Compliant Grounding Arrangement for a Separately Derived System

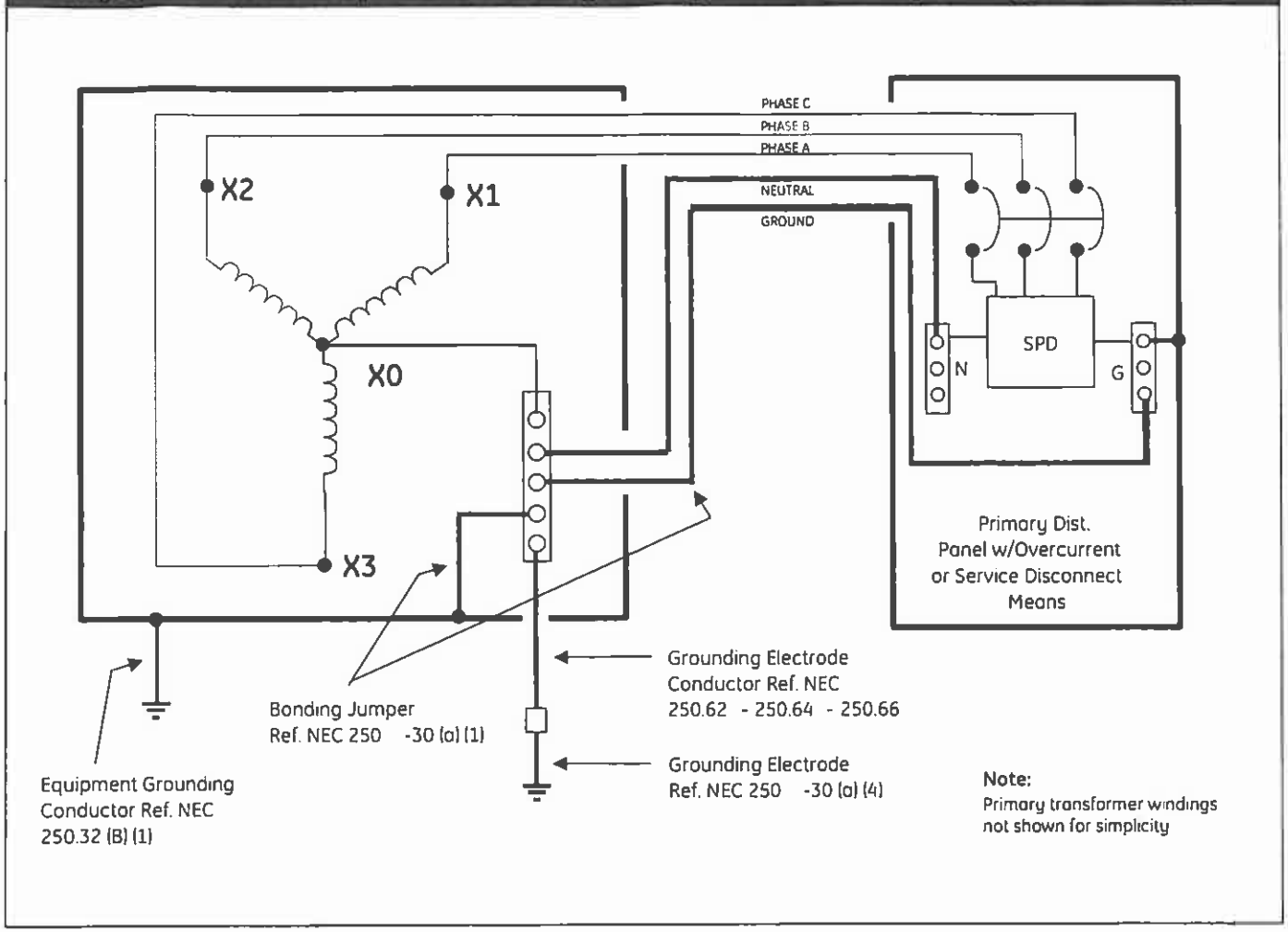

The illustration shown above, provides a recommended method for grounding a separately derived power system, per the National Electrical Code, Article 250.30. Please check with the local municipality or governing authority for additional codes or other approved regulatory requirements before attempting to configure any electrical power distribution system.

⚠	**WARNING** POWER MUST BE PROVEN DISCONNECTED BEFORE STARTING INSTALLATION, INSPECTION OR MAINTENANCE. FAILURE TO DO SO MAY CAUSE SERIOUS INJURY, DEATH AND/OR PROPERTY DAMAGE.

INSTALLATION:

Before attempting installation, make sure that the pre-installation requirements of this manual have been satisfied. If the status of the pre-installation requirements are not known, do not attempt to continue.

1. MOUNTING
   The GE Tranquell Wall Mounted SPD must be installed as close to the protected circuit as possible. Long power cable runs between the SPD and protected circuit will result in significantly reduced performance.
   Select a mounting location that will allow for a minimum length of wire between the SPD and the power terminals of the electrical service panel. The SPD can be mounted in any orientation, however special consideration should be given to allow for periodic inspection of the diagnostic display panel. The SPD should be mounted to a secure structure or surface.

2. DIMENSIONS AND RECOMMENDED CONDUIT ENTRANCE LOCATIONS

SPD Model Suffix Types:
WMN12S
WMN4S
WMN4X

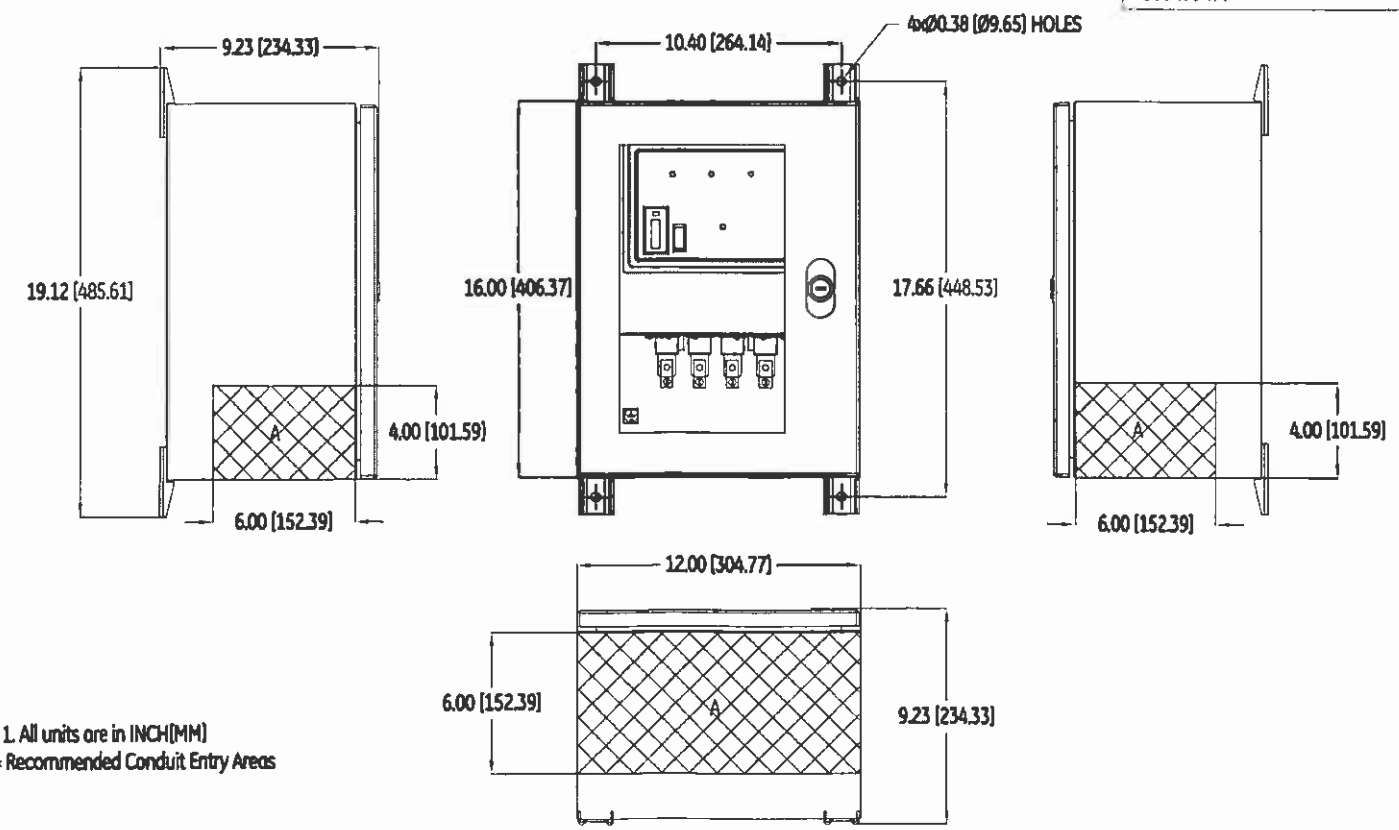

NOTE: 1. All units are in INCH[MM]
2. "A" = Recommended Conduit Entry Areas

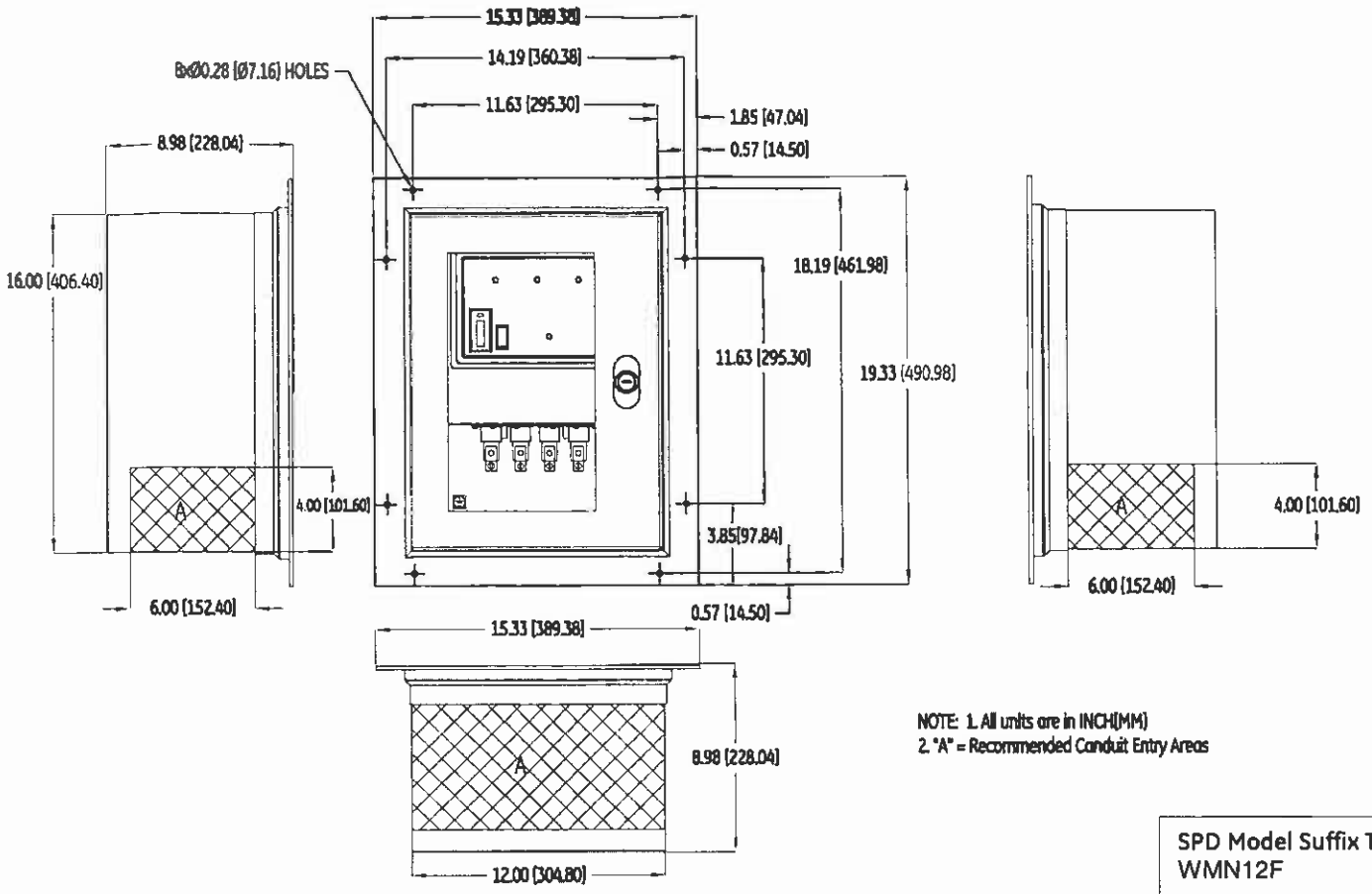

SPD Model Suffix Type:
WMN12F

SPD Model Suffix Type:
WMN1

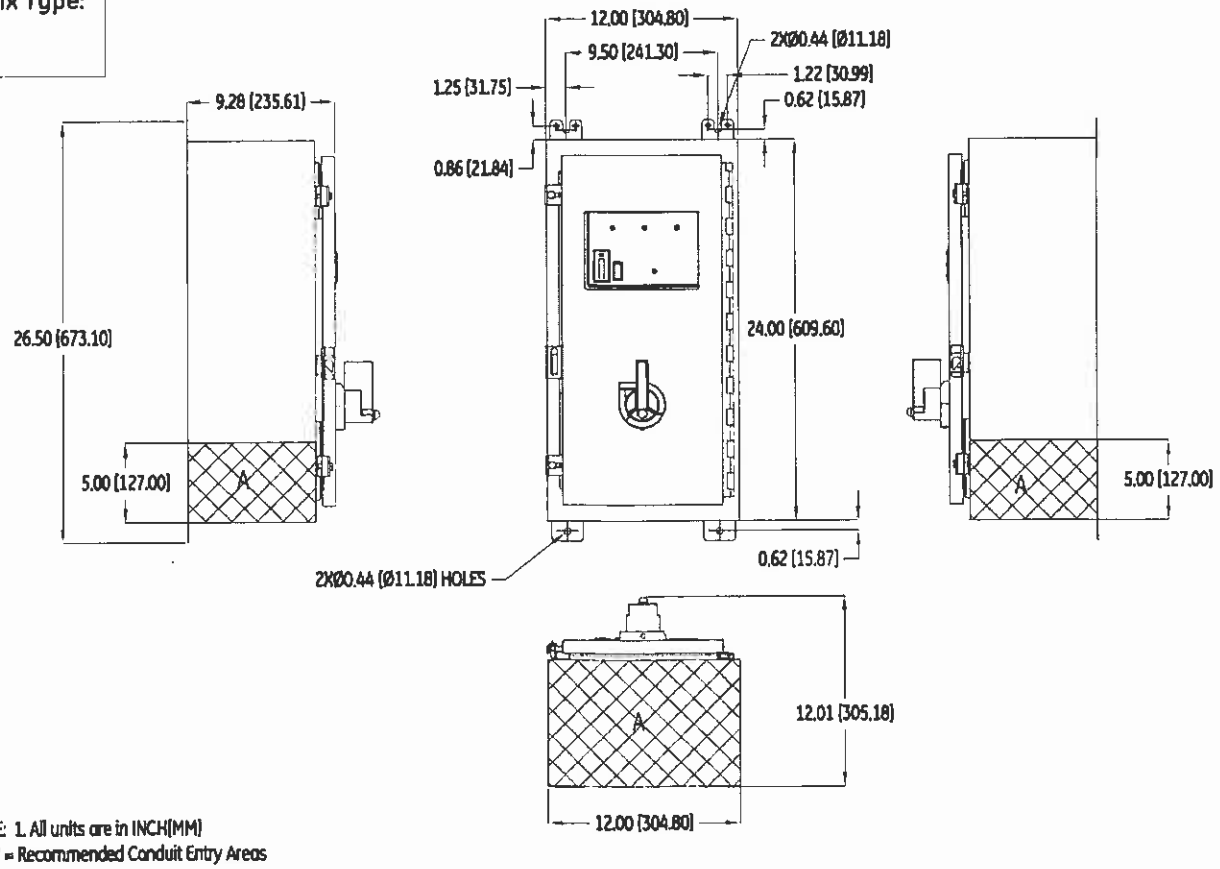

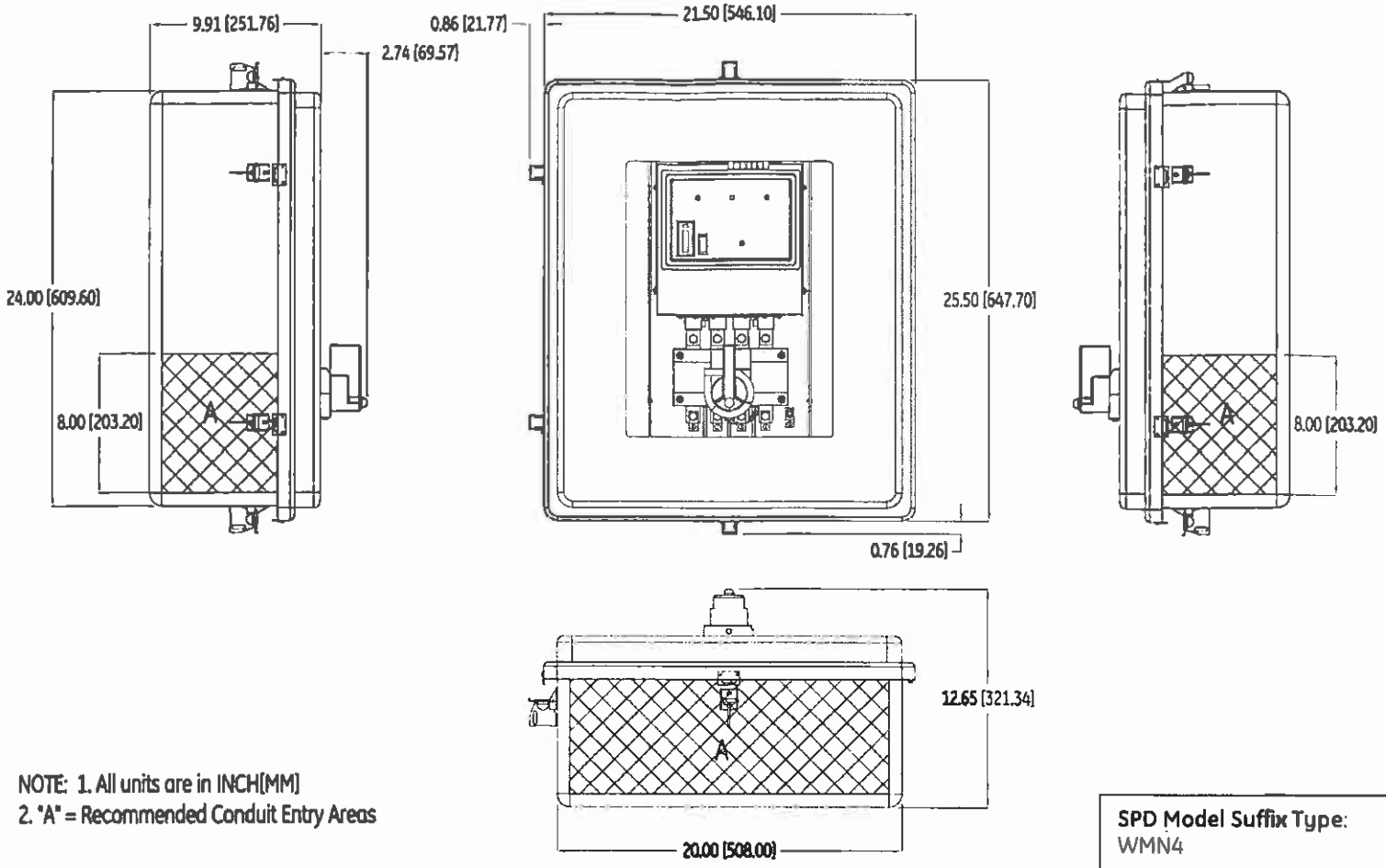

NOTE: 1. All units are in INCH[MM]
2. "A" = Recommended Conduit Entry Areas

SPD Model Suffix Type:
WMN4

INSTALLATION (CONT.):

3. **POWER CONNECTIONS**
   Mechanical terminals are provided on the SPD for connection to the electrical power system. These terminals will accommodate #14 to 2/0 AWG stranded copper conductors. The minimum recommended wire size for the GE Tranquell SPD is # 6 AWG. See page 13 for terminal location and identification.

4. **WIRE ROUTING**
   The length of wiring to the SPD must be kept at a minimum for the best performance. Wire lengths should be short, strait runs between the SPD and power source. Wiring impedance can be further reduced by twisting the phase, neutral and ground conductors together and routed in the same raceway or channel. Always avoid sharp bends when routing SPD connecting conductors.

5. **CIRCUIT BREAKER**
   A dedicated circuit breaker is not required for TPME or TPHE models. If a dedicated branch breaker is to be used to connect the SPD to the power system, GE recommends a 60A rated breaker. A dedicated breaker is also recommended for use with SPD model types that do not come equipped with an integral disconnect switch.

6. **REMOTE ALARM CONTACTS**
   Remote Alarm Monitoring Contacts are provided on all SPD model types covered by this manual. If this type of monitoring is desired, refer to page 13 for the location and pin configuration of these contacts. The contacts are dry, 1 form C type, rated 120 VAC, 1 A (30 VDC, 2A) maximum. Once the SPD has been energized and is operating as intended, the alarm contacts will switch to "Normal Status". The contacts will only change back to "Alarm Status" if there is a failure within the SPD suppression circuitry, or if power has been disconnected from the SPD. Allowing the Remote Alarm Contacts remain unconnected will not affect the performance or integrity of the SPD.

7. **SPD DISCONNECT SWITCH**
   A manually operated disconnect switch is provided as a standard feature on some models. It can be used to disconnect the SPD for servicing. For models without an integral disconnect, a dedicated circuit breaker should be considered as a means of disconnect.

8. **PRE-ENERGIZATION CHECK**
   Once all of the pre-installation conditions have been met and the GE Tranquell SPD has been installed, the SPD can now be energized. For SPD Operational Status, refer to Operation and Maintenance Sections – pages 15 & 16.

POWER TERMINALS AND REMOTE ALARM LOCATIONS

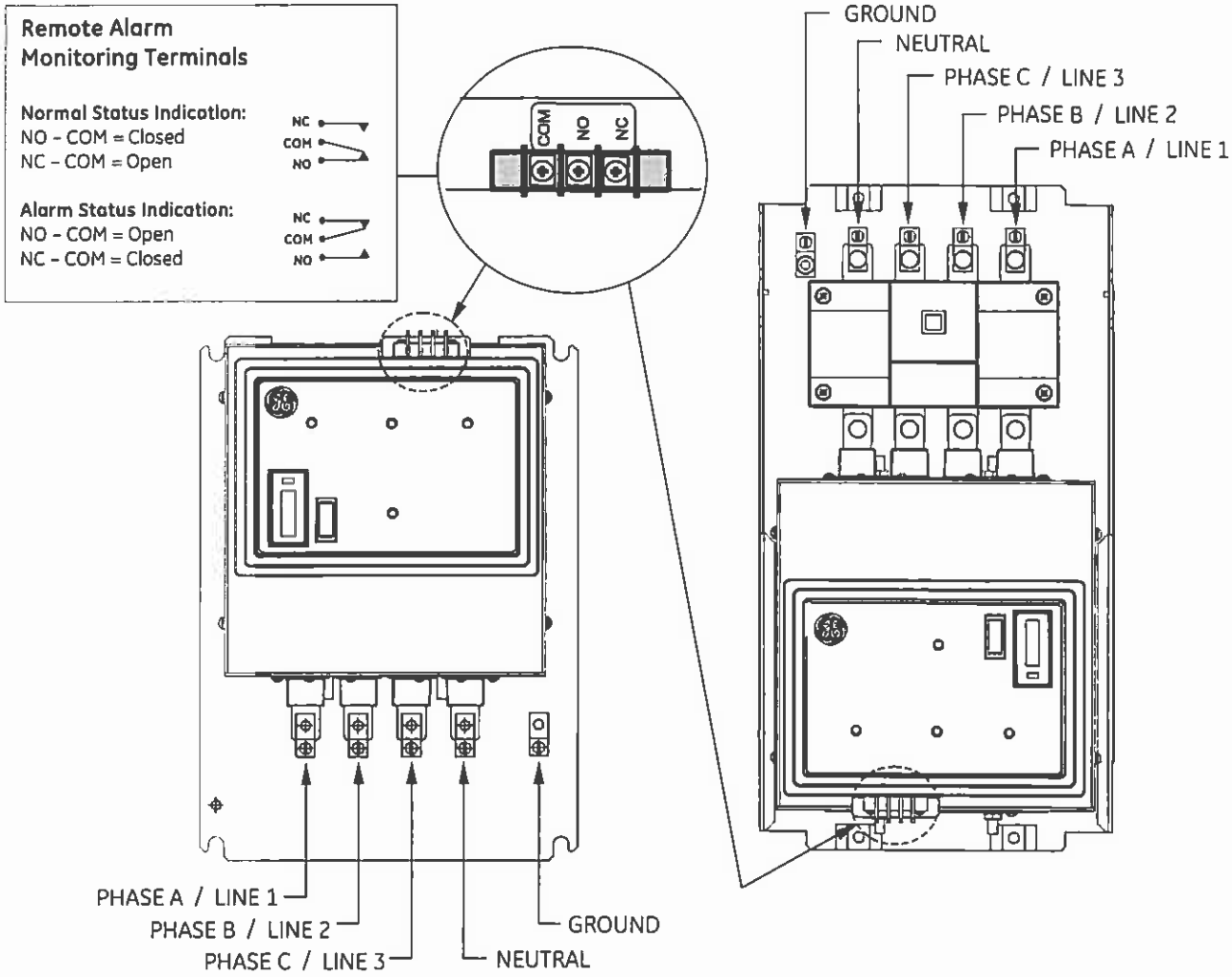

Interior View of SPD Model Number Suffix Types:
WMN12S
WMN12F
WMN4S
WMN4X
WMN12ST1
WMN12FT1
WMN4ST1
WMN4XT1

Interior View of SPD Model Number Suffix Types:
WMN1
WMN4
WMN1T1
WMN4T1

The above illustration represents the 2 possible configurations of interior assemblies found on GE Wall Mounted SPD models, depending on whether or not an integral disconnect switch is included. Unlimited mounting orientations of the SPD assembly are possible and will not affect performance as long as SPD connecting wire lengths are kept to a minimum.

INSTALLATION EXAMPLE

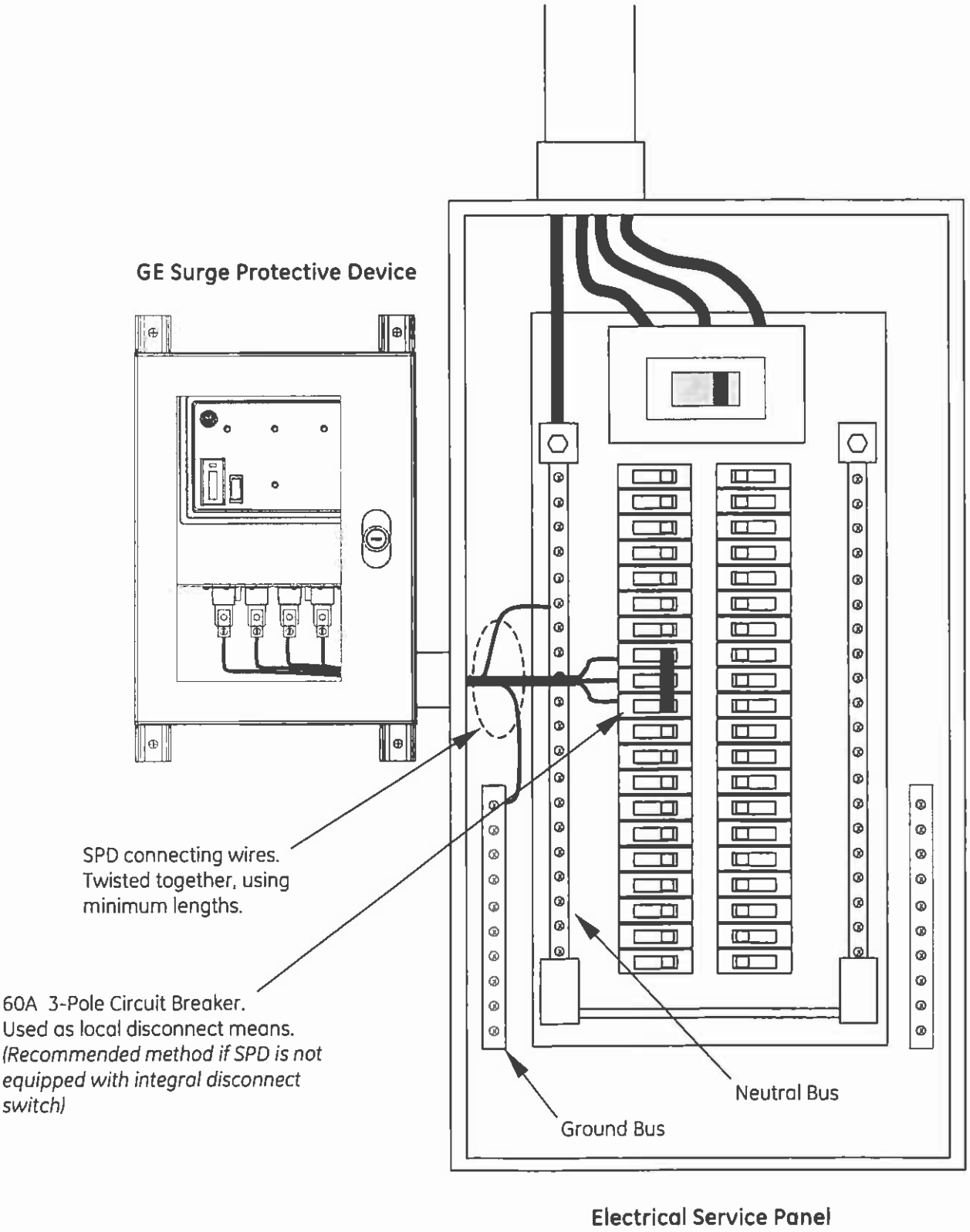

WARNING

UPON ENERGIZATION OF THE SPD, IF ANY OF THE LAMPS OR ALARMS INDICATES AN ABNORMAL CONDITION, POWER SHOULD PROMPTLY BE DISCONNECTED FROM THE SPD. THE ELECTRICAL SYSTEM SHOULD BE INSPECTED AND THE PRE-INSTALLATION REQUIREMENTS SHOULD BE VALIDATED. DO NOT ATTEMPT TO LEAVE POWER APPLIED TO THE SPD, OR RE-ENERGIZE THE SPD IN THE EVENT OF AN ALARM CONDITION. PLEASE CONTACT YOUR LOCAL GE REPRESENTATIVE FOR FURTHER ASSISTANCE.

OPERATION:

After applying power to the SPD, verify that the protection monitoring circuits are functioning correctly. If all status alarms indicate "normal", the SPD has been successfully installed and is operational.

SPD Display Panel

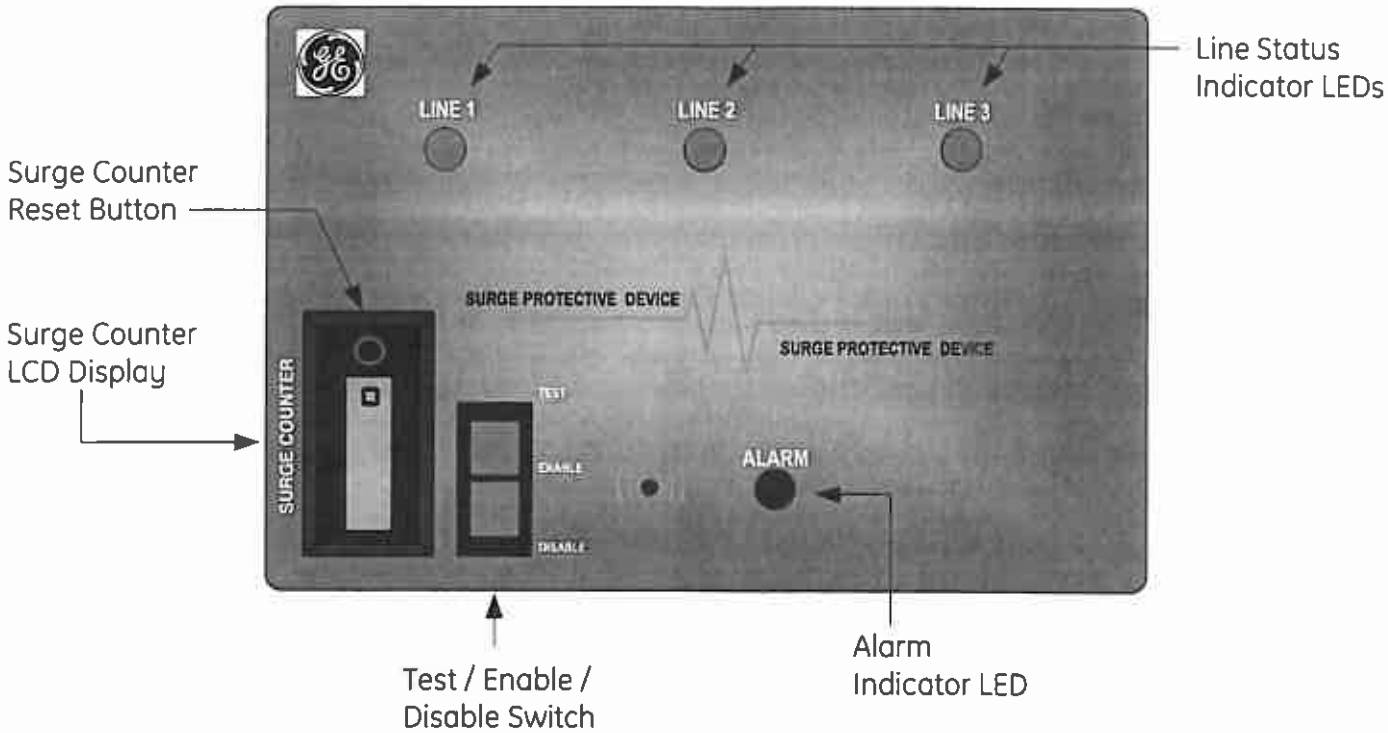

1. LINE STATUS INDICATOR LEDs
   The green line status LED's provide visual indication of SPD health status. As long as the SPD is connected to the electrical system supply voltage and the SPD suppression circuitry is functional, the line status indicators will be illuminated green. There is one green indicator per each protected phase.
2. ALARM STATUS INDICATOR LEDs
   When illuminated, the red Alarm Status Indicator LED will provide notification of a SPD failure condition. Verify the Alarm Status Indicator is not illuminated upon startup.
3. REMOTE ALARM CONTACTS
   Remote Alarm Contacts are available to remotely monitor the health status of the SPD. An alarm condition will result in a status change of the contacts. These contacts do not affect

the performance of the SPD and are not required to be connected for the SPD to function as intended. (See pages 9 & 10 for Alarm Contact details)

4. **TEST / ENABLE / DISABLE SWITCH**

   Enable Position - This is the normal position for the tri-position switch. In the Enable position, the Audible Alarm will sound in the event of a SPD failure mode.

   Disable Position - This position will silence the Audible Alarm if desired. The Disable switch will not disable or disconnect the SPD from the electrical power system.

   Test Position - The Test switch provides a quick diagnostic status of the Audible Alarm, Alarm Status Indicator and Remote Alarm Contacts. When pressed, the Audible Alarm will sound, the Alarm Lamp will illuminate, and the Remote Contacts will change state. The "Test" position is momentary. Once pressed, the switch will automatically reset to the "Enable Position" upon release.

5. **SURGE COUNTER LCD**
   The (optional) Surge Counter will sense and record transient surge events that have been mitigated by the SPD. The counter has been designed to detect transients that exceed the peak sine wave by more than 70%. If desired, the Surge Counter Display can be reset to zero at any time by pressing the reset button located on the LCD display.

MAINTENANCE:

GE does not provide a specific schedule for preventative maintenance as conditions will vary based on location and the environmental factors presented at each installation site. However, periodic inspections should be scheduled to verify that the SPD does not indicate a failure mode.

Inspections should also be made to check the integrity of the electrical supply connections to the SPD to ensure continued reliable performance.

SERVICING / TROUBLESHOOTING:

The GE Tranquell ETP Series SPD contains no user serviceable parts and requires no calibration. The rugged design of the SPD should provide many years of service.

Should a condition occur that results in premature failure of the GE Tranquell SPD, the integral SPD suppression thermal fusing will safely interrupt current flow through the SPD without disrupting power to the protected equipment. **This will remove the SPD from the power system and the load equipment will remain unprotected from subsequent surge activity until the SPD is replaced.**

If a change in operational status/alarm indication occurs, a qualified (licensed) electrician should inspect the electrical system to verify electrical system integrity. If the SPD remains in alarm after system inspection/corrections have been made, the SPD should be replaced. For further assistance, contact your local sales representative or call GE Power Quality at 1-800-637-1738.

WARNING

IN THE EVENT OF AN SPD ALARM CONDITION, DO NOT ATTEMPT TO DIS-ASSEMBLE THE SPD TO REPLACE FUSING OR OTHER COMPONENTS. THE SPD CONTAINS THERMALLY PROTECTED MOV'S THAT WILL ONLY OPEN WHEN THE SPD HAS FAILED IN A NON-SERVICEABLE CONDITION. THE ENTIRE SPD MUST BE REPLACED.

CONTACT GE POWER QUALITY AT 1-800-637-1738

NOTICE

These instructions do not purport to cover all details or variations in equipment nor to provide for every possible contingency to be met in connection with installation, operation, or maintenance. Should further information be desired or should particular problems arise which are not covered sufficiently for the purchaser's purposes, the matter should be referred to the GE Company.

TRANQUELL® IS A REGISTERED TRADEMARK OF GENERAL ELECTRIC COMPANY

imagination at work

GE Digital Energy – Power Quality
830 W 40th Street, Chicago, IL 60609 USA
800 637 1738 www.gepowerquality.com
Information subject to change without notice.
Please verify all details with GE.
© 2009 General Electric Company All Rights Reserved

GE Digital Energy
Power Quality

INSTALLATION, OPERATION AND MAINTENANCE MANUAL

GE TRANQUELL® Enhanced Thermal Protection (ETP) Series
Integrally Mounted Medium and High Exposure
Surge Protective Devices (SPDs)

For GE Spectra and OEM applications

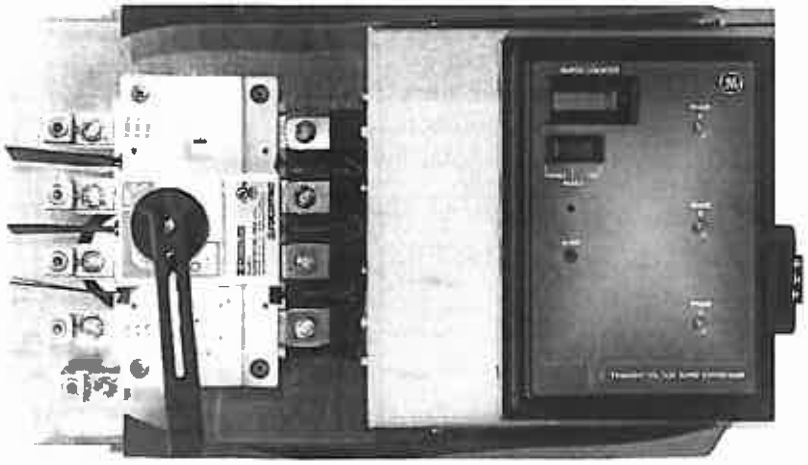

TABLE OF CONTENTS

IMPORTANT NOTICE....3
Transformer X0 Bond Warning Statement....3
PRODUCT DESCRIPTION....4
APPLICATION GUIDELINES....4
SPD Type....4
Maximum Continuous Operating Voltage (MCOV)....5
Electrical System Configuration....5
Peak Impulse Rating....5
UL 1449 Nominal Discharge Current (In)....5
Short Circuit Current Rating....5
Environmental Ratings....5
PRE-INSTALLATION REQUIREMENTS....6
System Configuration and Voltage....6
System Grounding and Bonding....6
SPD Installation on Ungrounded Power Systems....6
SPD Location / Primary Overcurrent Protection....6
VOLTAGE RATINGS AND POWER SOURCE CONFIGURATIONS....7
NEC COMPLIANT GROUNDING AND BONDING EXAMPLE....8
INSTALLATION....9
Mounting Considerations (OEM)....9
Power Connections (OEM)....9
Wire Routing (OEM)....9
Circuit Breaker (OEM)....9
Remote Alarm Contacts....9
SPD Disconnect Switch....10
Pre-Energization Check....10
SPD WIRING TERMINALS, REMOTE ALARM AND UL LABEL LOCATION DIAGRAM....10
OPERATION....11
Line Status Indicators....11
Alarm Status Indicators....11
Remote Alarm Contacts....11
Test / Enable / Disable Switch....12
Surge Counter LCD....12
MAINTENANCE....12
SERVICING / TROUBLESHOOTING....12

IMPORTANT NOTICE

THE ENTIRE CONTENT OF THIS MANUAL MUST BE READ AND FULLY UNDERSTOOD BEFORE ATTEMPTING ANY INSTALLATION OR ENERGIZATION OF THE SPD.

If there are any questions about the operational status, or integrity of the electrical system prior to installation of the SPD, please consult a qualified trained electrician before attempting to continue.

If the minimum requirements of this manual are not followed, the SPD could become irreversibly damaged, and/ or the electrical system and connected loads could be left unprotected.

Choosing the right product for the application, along with correct installation methods, as defined within this manual, will allow the GE Tranquell SPD to provide the best possible protection for many years.

Failure to comply with the applicable requirements of this manual can void the SPD warranty.

WARNING

SPECIAL ATTENTION MUST BE GIVEN TO VERIFY THAT A PROPER NEUTRAL-GROUND (XO) BOND HAS BEEN MADE WHEN POWER IS SUPPLIED FROM AN UPSTREAM TRANSFORMER OR ANY OTHER TYPE OF SEPARATELY DERIVED POWER SOURCE.

FAILURE TO PROVIDE THIS BOND, AS REQUIRED PER ARTICLE 250.30 OF THE NATIONAL ELECTRICAL CODE, CAN RESULT IN ELEVATED PHASE TO GROUND SOURCE VOLTAGE POTENTIALS. THESE VOLTAGES CAN CAUSE DAMAGE TO ELECTRICAL EQUIPMENT AS WELL AS SAFETY HAZARDS INCLUDING FIRE, ELECTRICAL SHOCK, SERIOUS INJURY, OR DEATH.

PRODUCT DESCRIPTION:

GE Tranquell Enhanced Thermal Protection (ETP) Series Type 1 and Type 2 Surge Protective Devices (formerly called TVSS), are designed for installation on low voltage electrical distribution systems. GE SPDs are designed to protect electrical equipment loads against the damaging effects of transient voltages that can be induced or generated as a result of remote lightning, power equipment switching or high frequency disturbances.

All GE Tranquell ETP Series SPDs incorporate Metal Oxide Varistor (MOV) technology to achieve superior transient suppression performance. Integral to each MOV is a unique Thermal Protection System that provides effective circuit interruption in the event of an abnormal phase overvoltage condition. Other standard features include protection status indicating lights, an audible alarm with test and disable features, form C alarm contacts for remote monitoring, a surge event counter, EMI filtering and a Surge Rated Disconnect Switch.

The GE Tranquell SPD unit described in this manual is intended to be factory installed in electrical distribution equipment, by the equipment manufacturer. GE applications include, Spectra Series Panels, MCC and Switchgear for low voltage electrical distribution systems. The integrally mounted SPD is UL recognized, conforming to UL 1283 and UL 1449 3rd Edition where applicable. All ratings are in accordance with ANSI / IEEE C62.41.1-2002, C62.41.2-2002 and NEMA LS1-1992 (R2000) recommended guidelines.

Model covered by this manual are:

GE Tranquell TPME and TPHE, UL Type 2 model types ending with the part number suffix of PP, ME, or SG . (Example: TPHE277Y20PP)
Model types are also available with a UL Type 1 rating. These models will be labeled with part number suffixes of PPT1, MET1 , or SGT1.

APPLICATION GUIDELINES:

Determining the surge protection to be provided in a facility or for a particular system or equipment can be a complex task that should be addressed as early as possible. This is typical when a new facility is constructed or when new sensitive electronic equipment has been installed. The following guidelines are offered for application assistance:

- Prior to installing any SPD, ensure that your facility electric supply system is properly installed and connected in accordance with all applicable national and local codes and safety procedures. All equipment and systems should be installed in accordance with manufacturer's instructions.

- Utilize the personnel from your local utility, your engineering department, GE application or service engineering, or a professional consulting engineering firm for technical guidance or troubleshooting.

- Understand your system, and the capabilities and limitations of SPDs and other power conditioning equipment.

- Select the proper GE TRANQUELL Series SPD unit for your system voltage, configuration, and the anticipated surge environment. Some of the key parameters for selection are defined below:

  - **SPD TYPE**

  The SPDs covered in this document are rated and marked accordingly for use on Type 1 or Type 2 applications. Type 1 SPDs can be installed on either line or load side of the electrical distribution system's main breaker or fuse. Type 2 SPDs can be installed only on the load side.

- **MAXIMUM CONTINUOUS OPERATING VOLTAGE (MCOV)**
  This value defines the maximum line-to-line or line-to-neutral continuous AC voltage that can be safely applied to the SPD. MCOV levels for GE Tranquell Series SPDs are set at 115% of nominal system voltage. For 120-volt AC systems, the MCOV is 125%. If there is a risk that the electrical system voltage could exceed the SPD MCOV rating, or if any unusually high power frequencies, Temporary Over Voltages (TOV), or phase swells are anticipated, contact your GE Sales Engineer for further assistance.

- **ELECTRICAL SYSTEM CONFIGURATION**
  SPDs are available for single (split) phase with neutral and ground, three-phase grounded WYE, three-phase ungrounded WYE, three-phase high-leg delta, and for three-phase ungrounded delta systems. (See page 7 for power source configurations)

- **PEAK IMPULSE RATING**
  Peak surge current capability is an important characteristic for a SPD. The rating per mode should equal or exceed the maximum surge expected in service. GE Tranquell SPDs described in this manual are available in maximum surge ratings of 65kA, 80kA, 100kA, 125kA, 150kA, 200kA, 250kA and 300kA.

- **UL 1449 NOMINAL DISCHARGE CURRENT (In)**
  The UL Nominal Discharge Current (In) rating should be considered when an SPD is selected for use within a UL96A Lightning Protection System. UL96A requires a Nominal Discharge Current (In) rating of 20kA for Type 1 or Type 2 SPDs.

- **SHORT CIRCUIT CURRENT RATING**
  GE Tranquell Series SPDs described in this manual are UL certified for use on electrical systems with rated ampacities up to 200,000 symmetrical amperes maximum.

- **ENVIRONMENTAL RATINGS**
  Integrally mounted SPD devices will maintain the same NEMA Enclosure rating as the Electrical Panel they are installed in. The SPD is designed to operate within an ambient temperature range of -40°C to 65°C (-40°F to 149°F) with a relative humidity level between 0-95% non-condensing.

➢ A direct lightning strike, that occurs within close proximity of an installed SPD, can result in surge currents that exceed the SPD's energy handling capability. This can result in reduced life expectancy or pre-mature failure of the SPD. Electrical power system supply voltages in excess of the SPD MCOV rating, can also cause SPD failure.

➢ Should a condition occur that results in premature failure of the SPD, the suppression circuitry will short, thereby allowing the integral SPD fusing to interrupt current flow without disrupting power to the connected loads. However, after SPD failure, the load equipment will remain unprotected from subsequent surge activity until the SPD is replaced.

➢ Increased rate of rise or higher surge current magnitudes can result in increased surge let-thru levels due to the non-linear clamping characteristics of SPDs. Conditions can occur where the surge withstand capability of the protected equipment is exceeded even though the SPD is functioning properly. In such cases, additional SPDs may be required, located closer to the sensitive load(s). (For additional information, refer to Standard IEEE 1100-2005, Section 3.4.3)

➢ GE Tranquell ETP Series WYE-connected SPDs have both **normal mode** (L-N, L-L) and **common mode** (L-G, N-G) protection. Protection between neutral and ground is provided on units designed for WYE-connected applications.

WARNING

THE EQUIPMENT COVERED BY THESE INSTRUCTIONS SHOULD BE INSTALLED AND SERVICED ONLY BY COMPETENT, QUALIFIED PERSONNEL UTILIZING PROPER SAFETY PRACTICES AND PROCEDURES THESE INSTRUCTIONS ARE WRITTEN FOR SUCH PERSONNEL AND ARE NOT INTENDED AS A SUBSTITUTE FOR ADEQUATE TRAINING AND EXPERIENCE IN SAFE PROCEDURES FOR THIS TYPE OF EQUIPMENT.

PRE-INSTALLATION REQUIREMENTS:

Prior to energization of the GE Tranquell integrally mounted SPD, it is critical that the following items have been addressed.

DO NOT ATTEMPT TO ENERGIZE THE SPD OR CONTINUE WITH THE INSTALLATION IF ALL OF THESE CONDITIONS HAVE NOT BEEN MET, OR ARE UNKNOWN.

1. SYSTEM CONFIGURATION AND VOLTAGE
   Check the configuration and voltage supply ratings that will be feeding the panel to ensure that the proper SPD model number has been selected for your system. The SPD model number can be found on the UL label affixed to the body of the SPD (see page 10). The SPD selection can be verified by comparing the Model Number to the correct electrical system described in the "VOLTAGE RATINGS & POWER SOURCE CONFIGURATIONS" chart shown on page 7. This effort might require removal of the panelboard cover and/or dead front shield. Refer to the electrical equipment installation manual for details on the panel assembly.

2. SYSTEM GROUNDING AND BONDING
   Verify that a NEC (National Electrical Code) compliant X0-Ground bond has been made at the upstream transformer or other separately derived system that supplies voltage to the SPD. Per NEC Article 250.30, this bond must be in place on all 3-Phase WYE, 3-Phase Hi-Leg Delta, and Single Phase Split-Systems. Refer to page 8 for an example of an installation that complies with these NEC recommendations.

WARNING

FAILURE TO PROVIDE THE X0 BOND WILL DAMAGE THE SPD AND VOID THE PRODUCT WARRANTY.

Verify that there have not been multiple instances of Neutral to Ground bonds on the electrical system. These bonds, while either intentional or accidental, result in Ground currents that can create differential voltage potentials between Neutral and Ground. Redundant Neutral to Ground connections can result in damage to the SPD and are in violation of NEC.

3. SPD INSTALLATION ON UNGROUNDED POWER SYSTEMS
   Ungrounded power systems are inherently unstable and can produce excessively high line-to-ground voltages during certain fault conditions. During these fault conditions any electrical equipment, including an SPD, may be subjected to voltages which exceed their designed ratings. This information is being provided to the user so that an informed decision can be made before installing any electrical equipment on an ungrounded power system.

4. SPD LOCATION / PRIMARY OVERCURRENT PROTECTION
   Per the National Electrical Code (NEC Article 285), Type 1 SPDs may be placed on either side of the main service breaker or fuse (line or load) without the need for supplemental overcurrent protection. Type 2 SPDs are allowed to be placed on the load side only.

VOLTAGE RATINGS & POWER SOURCE CONFIGURATIONS

TRANQUELL MODEL	NOMINAL VOLTAGE (50/60Hz)	MAXIMUM CONTINOUS OPERATING VOLTAGE (MCOV)	SYSTEM TYPE	SOURCE CONFIGURATION
TPME / TPHE 120S	120 / 208-240V	150V (L-N / L-G)	Single Phase 3 Wire + Ground	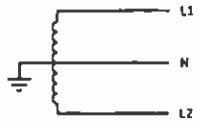
			Dual Phase 3 Wire + Ground	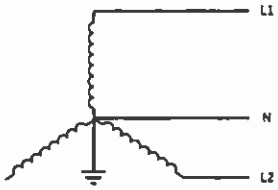
TPME / TPHE 120Y TPME / TPHE 220Y TPME / TPHE 240Y TPME / TPHE 277Y TPME / TPHE 347Y	120 / 208V 220 / 380V 240 / 415V 277 / 480V 347 / 600V	150V (L-N / L-G) 320V (L-N / L-G) 320V (L-N / L-G) 320V (L-N / L-G) 420V (L-N / L-G)	Three Phase WYE, 4 Wire + Ground	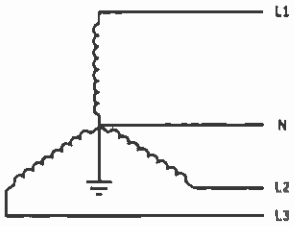
TPME / TPHE 240D TPME / TPHE 480D	240V 480V	270V (L-G) 550V (L-G)	Three Phase Delta, 3 Wire	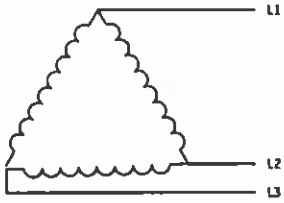
			Three Phase WYE, 3 Wire	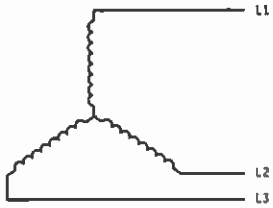
TPME / TPHE 240H	120 / 240V	150V (L-N / L-G) Phase A & C 270V (L-N / L-G) Phase B	Three Phase Delta Hi-Leg, 4 Wire + Ground	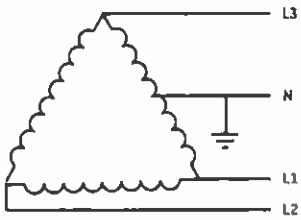

Example of an NEC Compliant Grounding Arrangement for a Separately Derived System

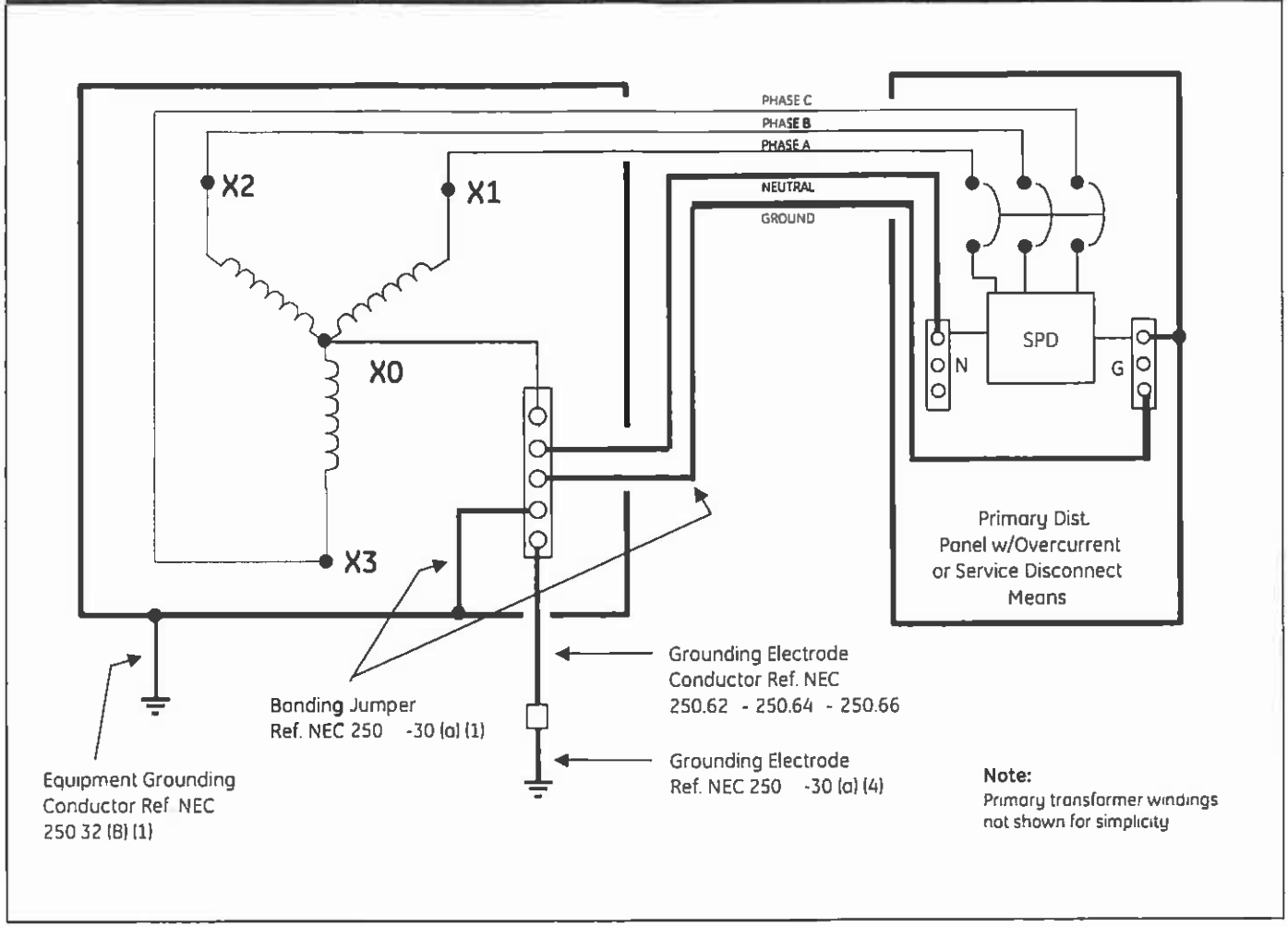

The illustration shown above, provides a recommended method for grounding a separately derived power system, per the National Electrical Code, Article 250.30. Please check with the local municipality or governing authority for additional codes or other approved regulatory requirements before attempting to configure any electrical power distribution system.

⚠	**WARNING** POWER MUST BE PROVEN DISCONNECTED BEFORE STARTING INSTALLATION, INSPECTION OR MAINTENANCE. FAILURE TO DO SO MAY CAUSE SERIOUS INJURY, DEATH AND/OR PROPERTY DAMAGE.

INSTALLATION:

The SPDs described in this manual are intended to arrive at the job site as factory-mounted and wired into GE Spectra Brand or other OEM Brand electrical panels or gear. For these applications, please begin at step number 5 below.

Installation steps 1-4, shown below (appended with "OEM"), are intended to provide guidance to OEM's for factory installation considerations.

Before attempting installation, make sure that the pre-installation requirements on pages 6, 7 and 8 of this manual have been satisfied. If the status of the pre-installation requirements are not known, do not attempt to continue SPD installation until the requirements can be confirmed.

1. MOUNTING CONSIDERATIONS (OEM)
   The SPD is configured with a mounting base to allow for secure attachment to the equipment frame. The SPD can be installed in any orientation, however special consideration should be given to allow for periodic inspection of the diagnostic display panel. The SPD should be installed as close to the power source as possible to provide the best SPD performance. The SPD mounting base should always be secured to a structure that is intended to be grounded.

2. POWER CONNECTIONS (OEM)
   Mechanical terminals are provided on the SPD for connection to the electrical power system. These terminals will accommodate #14 to 2/0 AWG stranded copper conductors. The minimum recommended wire size for the GE Tranquell SPD is # 6 AWG. See page 10 for terminal location and identification.

3. WIRE ROUTING (OEM)
   The length of wiring to the SPD must be kept at a minimum for the best performance. Wire lengths should be short, strait runs between the SPD and power source. Wiring impedance can be further reduced by twisting the phase, neutral and ground conductors together and routed in the same raceway or channel. Always avoid sharp bends when routing SPD connecting conductors.

4. CIRCUIT BREAKER (OEM)
   A dedicated circuit breaker is not required for TPME or TPHE models. If a dedicated branch breaker is to be used to connect the SPD to the power system, GE recommends a 60A rated breaker.

5. REMOTE ALARM CONTACTS
   Remote Alarm Monitoring Contacts are provided on all SPD model types covered by this manual. If this type of monitoring is desired, refer to page 10 for the location and pin configuration of these contacts. The contacts are dry, 1 form C type, rated 120 VAC, 1 A (30 VDC, 2A) maximum. Once the SPD has been energized and is operating as intended, the alarm contacts will switch to "Normal Status". The contacts will only change back to "Alarm Status" if there is a failure within the SPD suppression circuitry, or if power has been disconnected from the SPD. Allowing the Remote Alarm Contacts remain unconnected will not affect the performance or integrity of the SPD.

6. **SPD DISCONNECT SWITCH**
   A manually operated disconnect switch is provided as a standard feature on some models. It can be used to disconnect the SPD for servicing. For models without an integral disconnect, a dedicated circuit breaker should be considered as a means of disconnect.

7. **PRE-ENERGIZATION CHECK**
   Once all of the pre-installation conditions have been met and the GE Tranquell SPD has been installed, the SPD can now be energized. For SPD Operational Status, refer to Operation and Maintenance Sections - pages 11 & 12.

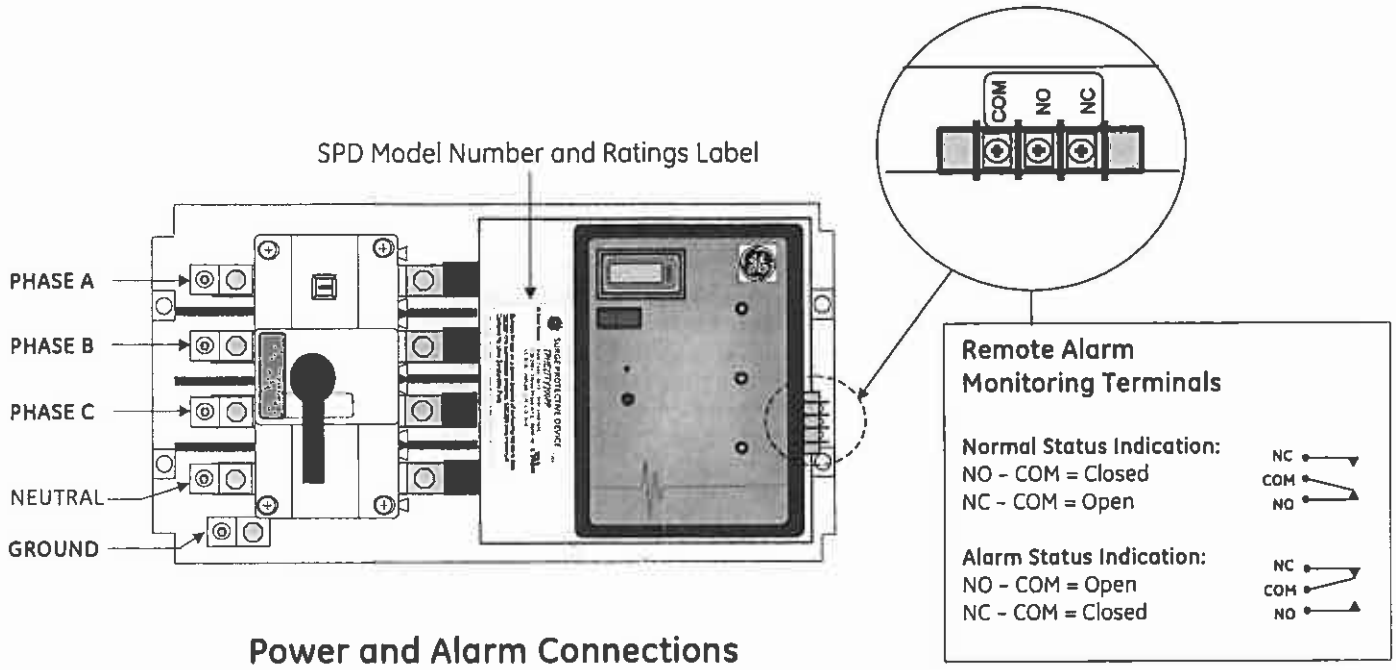

Power and Alarm Connections

This illustration represents the orientation of a SPD as installed in a GE Spectra Series Power Panel. Other orientations are possible depending on the type of equipment the SPD is installed in. The SPD features will be the same regardless of application.

WARNING

UPON ENERGIZATION OF THE SPD, IF ANY OF THE LAMPS OR ALARMS INDICATES AN ABNORMAL CONDITION, POWER SHOULD PROMPTLY BE DISCONNECTED FROM THE SPD. THE ELECTRICAL SYSTEM SHOULD BE INSPECTED AND THE PRE-INSTALLATION REQUIREMENTS SHOULD BE VALIDATED. DO NOT ATTEMPT TO LEAVE POWER APPLIED TO THE SPD, OR RE-ENERGIZE THE SPD IN THE EVENT OF AN ALARM CONDITION. PLEASE CONTACT YOUR LOCAL GE REPRESENTATIVE FOR FURTHER ASSISTANCE.

OPERATION:

After applying power to the SPD, verify that the protection monitoring circuits are functioning correctly. If all status alarms indicate "normal", the SPD has been successfully installed and is operational.

SPD Display Panel

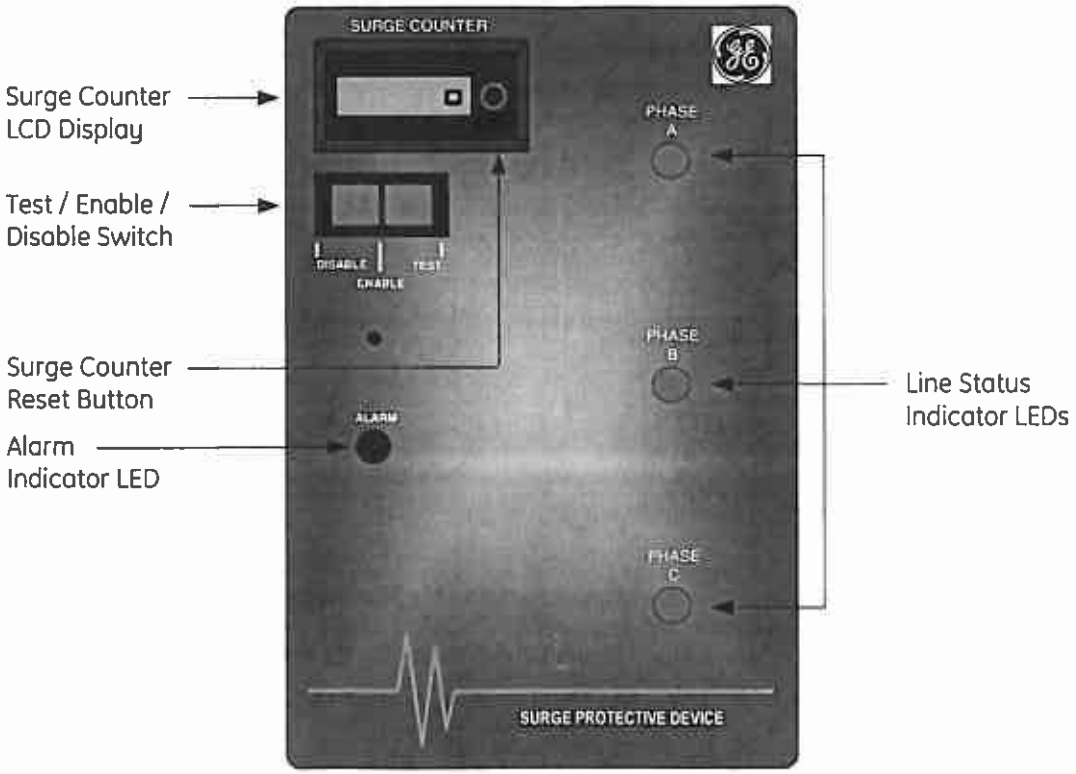

1. LINE STATUS INDICATOR LEDs
   The green line status LED's provide visual indication of SPD health status. As long as the SPD is connected to the electrical system supply voltage and the SPD suppression circuitry is functional, the line status indicators will be illuminated green. There is one green indicator per each protected phase.

2. ALARM STATUS INDICATOR LEDs
   When illuminated, the red Alarm Status Indicator LED will provide notification of a SPD failure condition. Verify the Alarm Status Indicator is not illuminated upon startup.

3. REMOTE ALARM CONTACTS
   Remote Alarm Contacts are available to remotely monitor the health status of the SPD. An alarm condition will result in a status change of the contacts. These contacts do not affect

the performance of the SPD and are not required to be connected for the SPD to function as intended. (See pages 9 & 10 for Alarm Contact details)

4. TEST / ENABLE / DISABLE SWITCH

   Enable Position - This is the normal position for the tri-position switch. In the Enable position, the Audible Alarm will sound in the event of a SPD failure mode.

   Disable Position – This position will silence the Audible Alarm if desired. The Disable switch will not disable or disconnect the SPD from the electrical power system.

   Test Position – The Test switch provides a quick diagnostic status of the Audible Alarm, Alarm Status Indicator and Remote Alarm Contacts. When pressed, the Audible Alarm will sound, the Alarm Lamp will illuminate, and the Remote Contacts will change state. The "Test" position is momentary. Once pressed, the switch will automatically reset to the "Enable Position" upon release.

5. SURGE COUNTER LCD DISPLAY
   The Surge Counter will sense and record transient surge events that have been mitigated by the SPD. The counter has been designed to detect transients that exceed the peak sine wave by more than 70%. If desired, the Surge Counter Display can be reset to zero at any time by pressing the reset button located on the LCD display.

MAINTENANCE:

GE does not provide a specific schedule for preventative maintenance as conditions will vary based on location and the environmental factors presented at each installation site. However, periodic inspections should be scheduled to verify that the SPD does not indicate a failure mode.

Inspections should also be made to check the integrity of the electrical supply connections to the SPD to ensure continued reliable performance.

SERVICING / TROUBLESHOOTING:

The GE Tranquell ETP Series SPD contains no user serviceable parts and requires no calibration. The rugged design of the SPD should provide many years of service.

Should a condition occur that results in premature failure of the GE Tranquell SPD, the integral SPD suppression thermal fusing will safely interrupt current flow through the SPD without disrupting power to the protected equipment. **This will remove the SPD from the power system and the load equipment will remain unprotected from subsequent surge activity until the SPD is replaced.**

If a change in operational status/alarm indication occurs, a qualified (licensed) electrician should inspect the electrical system to verify electrical system integrity. If the SPD remains in alarm after system inspection/corrections have been made, the SPD should be replaced. For further assistance, contact your local sales representative or call GE Power Quality at 1-800-637-1738.

WARNING

IN THE EVENT OF AN SPD ALARM CONDITION, DO NOT ATTEMPT TO DIS-ASSEMBLE THE SPD TO REPLACE FUSING OR OTHER COMPONENTS. THE SPD CONTAINS THERMALLY PROTECTED MOV'S THAT WILL ONLY OPEN WHEN THE SPD HAS FAILED IN A NON-SERVICEABLE CONDITION. THE ENTIRE SPD MUST BE REPLACED.

CONTACT GE POWER QUALITY AT 1-800-637-1738

NOTICE

These instructions do not purport to cover all details or variations in equipment nor to provide for every possible contingency to be met in connection with installation, operation, or maintenance. Should further information be desired or should particular problems arise which are not covered sufficiently for the purchaser's purposes, the matter should be referred to the GE Company.

TRANQUELL® IS A REGISTERED TRADEMARK OF GENERAL ELECTRIC COMPANY

imagination at work

GE Digital Energy – Power Quality
830 W 40th Street, Chicago, IL 60609 USA
800 637 1738 www.gepowerquality.com
Information subject to change without notice.
Please verify all details with GE.
© 2009 General Electric Company All Rights Reserved

Specification Section 16492

Electrical Metering Devices

1.1.1 DESCRIPTION

The GE Power Management PQM Power Quality Meter is an ideal choice for continuous monitoring of a single or three-phase system. It provides metering for current, voltage, real power, reactive power, apparent power, energy use, cost of power, power factor, and frequency. Programmable setpoints and four assignable output relays allow control functions to be added for specific applications. This includes basic alarm on over/under current or voltage, unbalance, demand based load shedding, and capacitor power factor correction control. More complex control is possible using the four switch inputs; these can also be used for status information such as breaker open/closed, flow information, etc.

As a data gathering device for plant automation systems that integrate process, instrument, and electrical requirements, all monitored values are available via one of two RS485 communication ports running the Modbus protocol. If analog values are required for direct interface to a PLC, any of the monitored values can output as a 4 to 20 mA (or 0 to 1 mA) signal to replace up to 4 separate transducers. A third RS232 communication port connects to a PC from the front panel for simultaneous access of information by other plant personnel.

With increasing use of electronic loads such as computers, ballasts, and variable frequency drives, the quality of the power system is important. With the harmonic analysis option, any phase current or voltage can be displayed and the harmonic content calculated. Knowledge of the harmonic distribution allows action to be taken to prevent overheated transformers, motors, capacitors, neutral wires, and nuisance breaker trips. Redistribution of system loading can also be determined. The PQM can also provide waveform and data printouts to assist in problem diagnosis.

Economical system monitoring or control is possible by selecting the non-display chassis model as a system component and adding required options to obtain the desired level of functionality.

1.1.2 FEATURE HIGHLIGHTS

- Monitor: A, V, VA, W, var, kWh, kvarh, kVAh, PF, Hz
- Demand metering: W, var, A, VA
- Setpoints for alarm or control from most measured values, including: unbalance, frequency, power factor, voltage, and current
- 4 output relays / 4 switch inputs for flexible control configuration
- 4 isolated analog outputs replace transducers for PLC interface
- 1 4-20 mA analog input
- Modbus communications
- Three COM ports (two rear RS485 ports and one front RS232 port) for access by process, electrical, maintenance, and instrument personnel
- Harmonic analysis for power quality review and problem correction
- 40-character display and keypad for local programming
- Free PQMPC software for setpoint entry or monitoring from a PC
- Simulation mode for testing and training
- Compact design for panel or chassis mount
- AC/DC control power

1

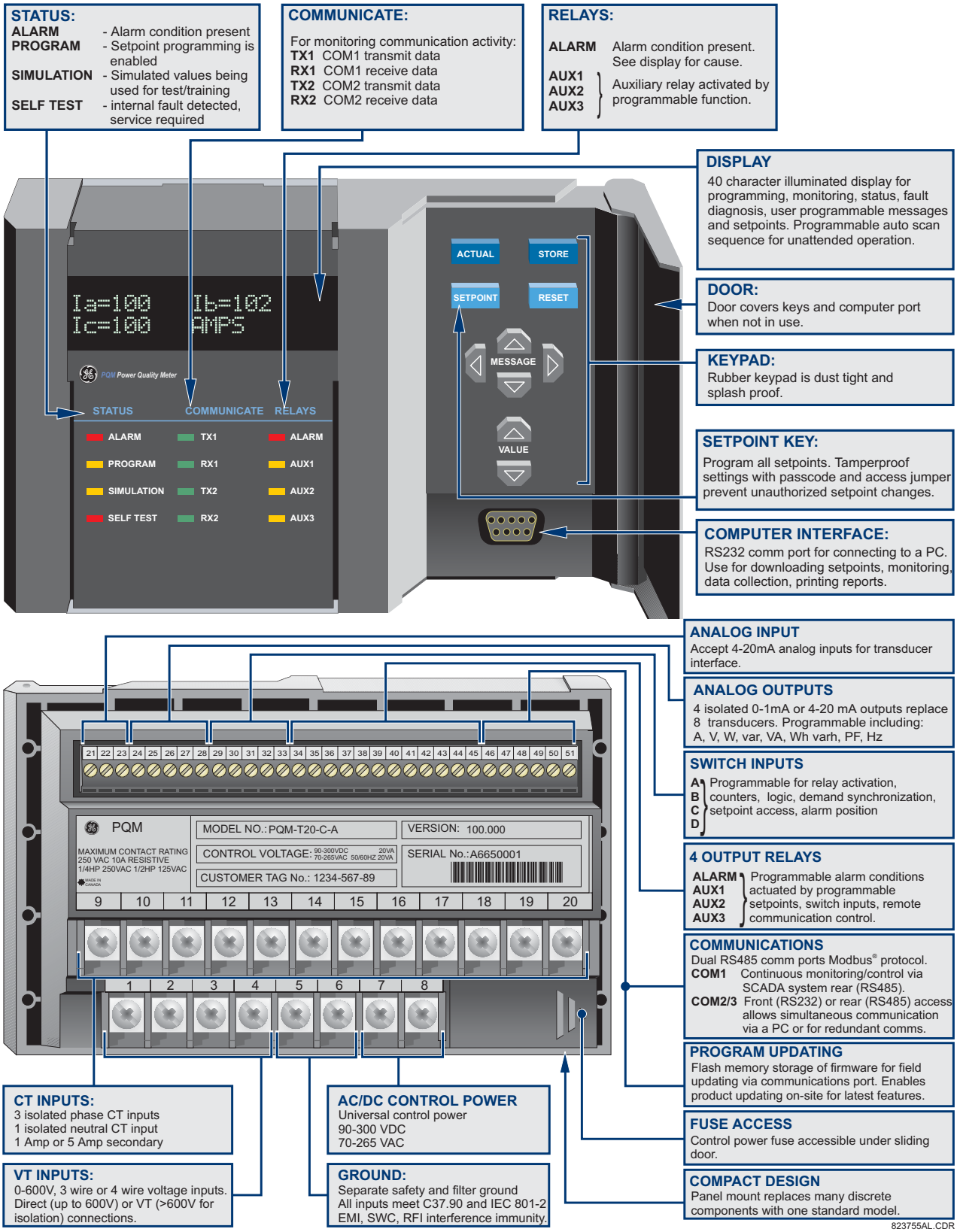

Figure 1–1: PQM FEATURE HIGLIGHTS

- Metering of distribution feeders, transformers, generators, capacitor banks, and motors
- Medium and low voltage three-phase systems
- Commercial, industrial, utility
- Flexible control for demand load shedding, power factor, etc.
- Power quality analysis
- System debugging

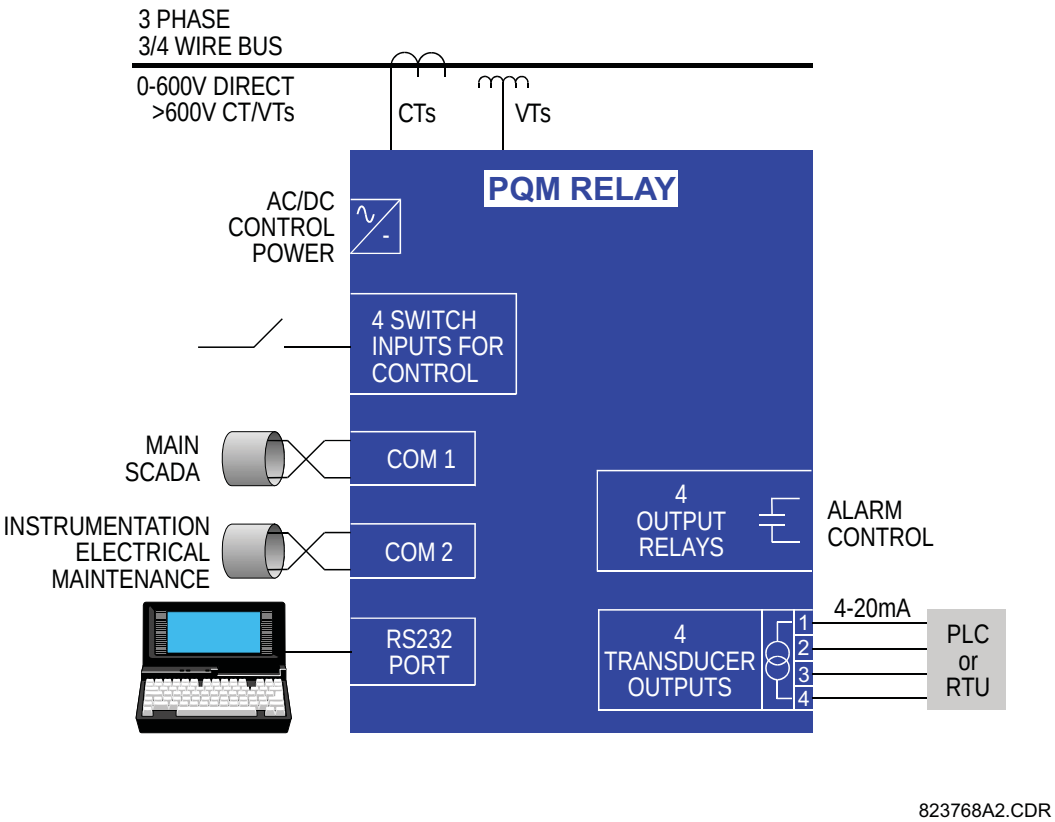

Figure 1–2: SINGLE LINE DIAGRAM

1.2.1 METERING

True RMS monitoring of I_a, I_b, I_c, I_n, V_{an}, V_{bn}, V_{cn}, V_{ab}, V_{bc}, V_{ca}, voltage/current unbalance, power factor, line frequency, watts, vars, VA, Wh, varh, VAh, and demand readings for A, W, vars, and VA. Maximum and minimum values of measured quantities are recorded and are date and time stamped.

A 40-character display with brightness control is used for programming setpoints and monitoring values and status.

a) ALARMS

Alarm conditions can be set up for all measured quantities. These include overcurrent, undercurrent, neutral current, current unbalance, voltage unbalance, phase reversal, overfrequency, underfrequency, power factor, switch inputs, etc. The alarm messages are displayed in a simple and easy to understand English format.

b) COMMUNICATION

The PQM is equipped with one standard RS485 port utilizing the Modbus or DNP 3.0 protocols. This can be used to integrate process, instrumentation, and electrical requirements in a plant automation system by connecting PQM meters together to a DCS or SCADA system. A PC running PQMPC can change system setpoints and monitor values, status, and alarms. Continuous monitoring minimizes process downtime by immediately identifying potential problems due to faults or changes from growth.

The PQM also includes a front RS232 port which may be employed to perform such tasks as:

- data monitoring
- problem diagnosis
- viewing event records
- trending
- printing settings and/or actual values
- loading new firmware into the PQM

1.2.2 FUTURE EXPANSION

Flash memory is used to store firmware within the PQM. This allows future product upgrades to be loaded via the serial port.

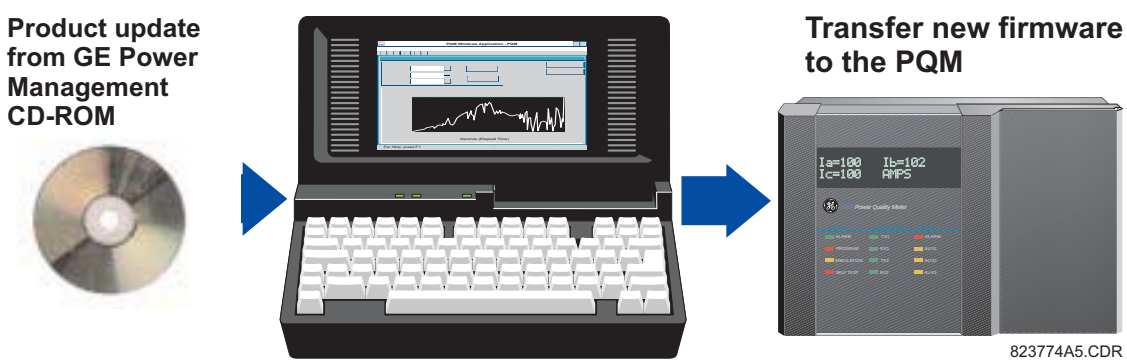

Figure 1–3: DOWNLOADING PRODUCT ENHANCEMENTS VIA THE SERIAL PORT

PQM units can initially be used as standalone meters. Their open architecture allows connection to other Modbus compatible devices on the same communication link. These can be integrated in a complete plant-wide system for overall process monitoring and control.

a) TRANSDUCER OPTION

Four isolated 4 to 20 mA (or 0 to 1 mA depending on the installed option) analog outputs are provided that can replace up to eight transducers. The outputs can be assigned to any measured parameters for direct interface to a PLC.

One 4 to 20 mA analog input is provided to accept a transducer output for displaying information such as temperature or water level.

An additional rear RS485 communication port is provided for simultaneous monitoring by process, instrument, electrical, or maintenance personnel.

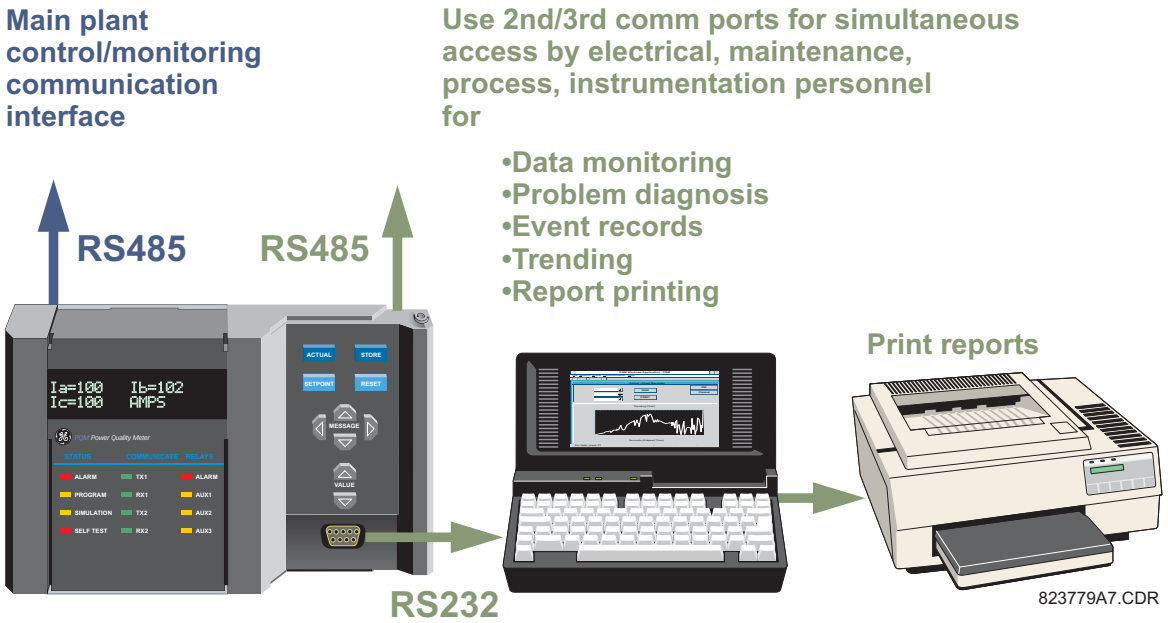

Figure 1–4: ADDITIONAL COMMUNICATION PORT

b) CONTROL OPTION

An additional three dry-contact form “C” output relays and four dry-contact switch inputs are provided. These additional relays can be combined with setpoints and inputs/outputs for control applications. Possibilities include:

- undercurrent alarm warnings for pump protection
- over/undervoltage for generators
- unbalance alarm warnings to protect rotating machines
- dual level power factor for capacitor bank switching
- underfrequency/demand output for load shedding resulting in power cost savings
- kWh, kvarh and kVAh pulse output for PLC interface
- Pulse input for totalizing quantities such as kWh, kvarh, kVAh, etc.

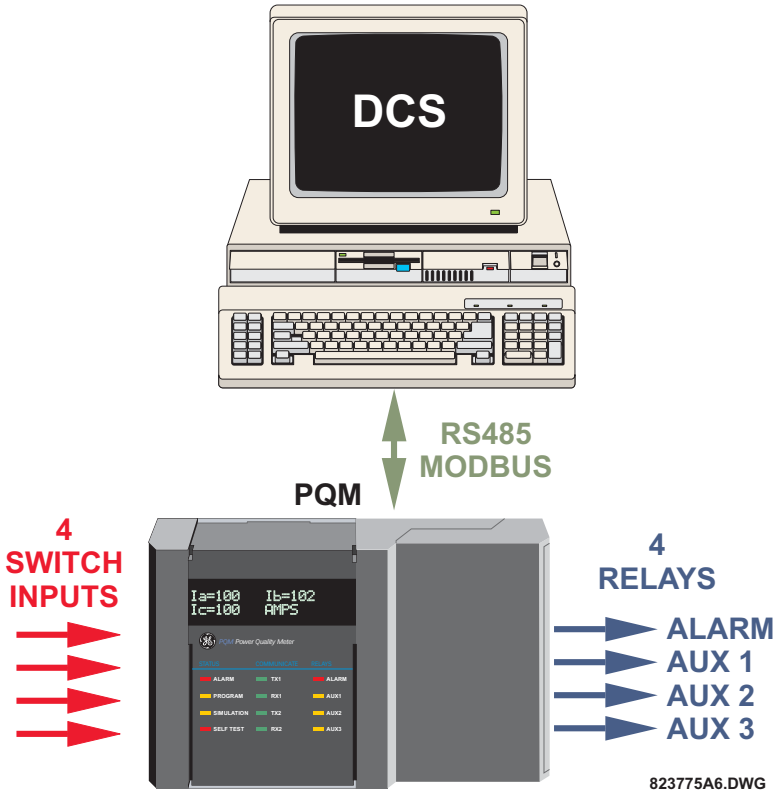

Figure 1–5: SWITCH INPUTS AND OUTPUTS RELAYS

c) POWER ANALYSIS OPTION

Non-linear loads (such as variable speed drives, computers, and electronic ballasts) can cause unwanted harmonics that may lead to nuisance breaker tripping, telephone interference, and transformer, capacitor or motor overheating. For fault diagnostics such as detecting undersized neutral wiring, assessing the need for harmonic rated transformers, or judging the effectiveness of harmonic filters, details of the harmonic spectrum are useful and available with the power analysis option.

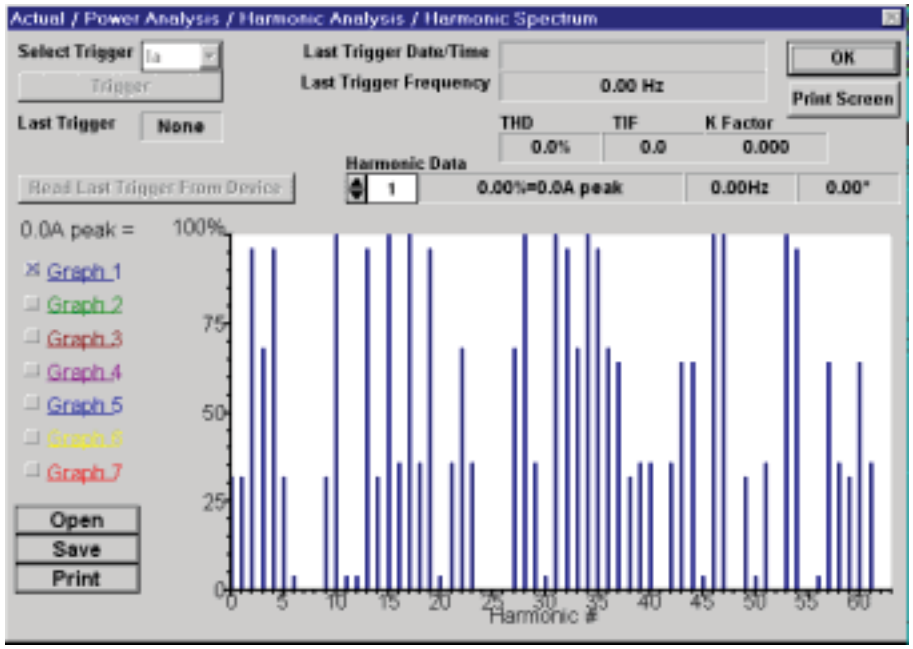

Figure 1–6: HARMONIC SPECTRUM

Voltage and current waveforms can be captured and displayed on a PC with PQMPC or third party software. Distorted peaks or notches from SCR switching provide clues for taking corrective action.

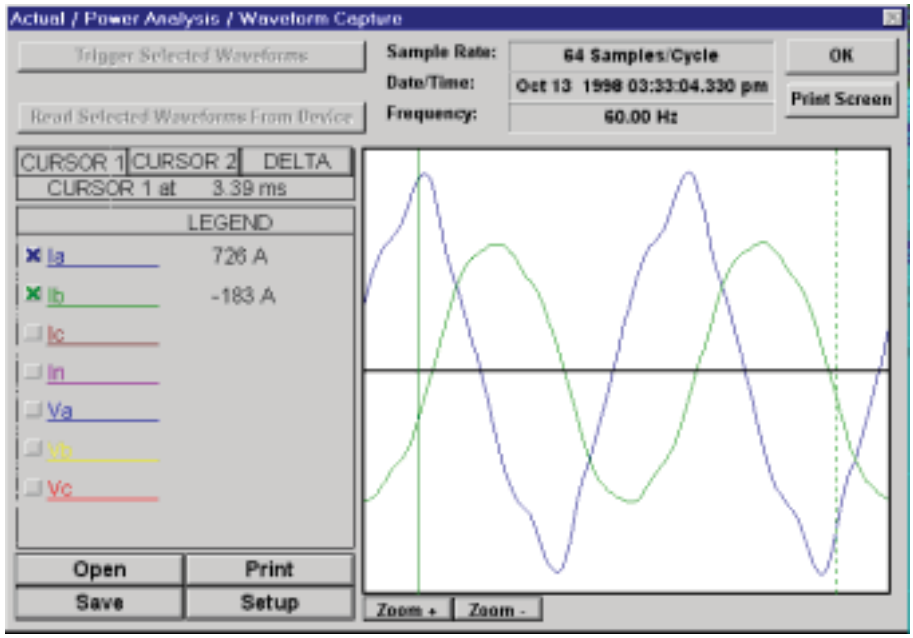

Figure 1–7: CAPTURED WAVEFORM

Alarms, setpoint triggers, and input and output events can be stored in a 40-event record and time/date stamped by the internal clock. This is useful for diagnosing problems and system activity. The event record is available through serial communication. Minimum and maximum values are also continuously updated and time/date stamped.

Routine event logs of all measured quantities can be created, saved to a file, and/or printed.

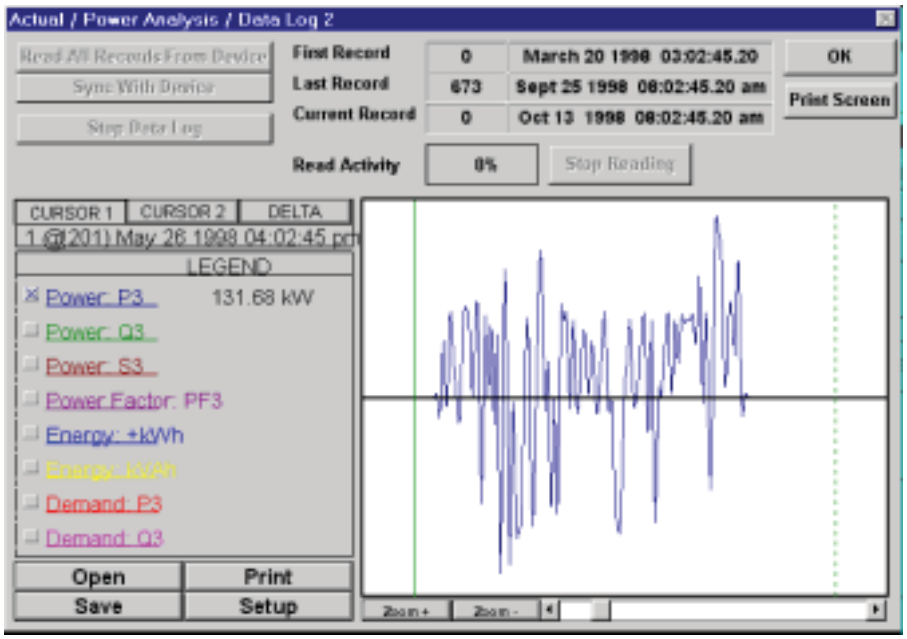

Figure 1–8: DATA LOGGER

The power analysis option also provides a Trace Memory feature. This feature can be used to record specified parameters based on the user defined triggers.

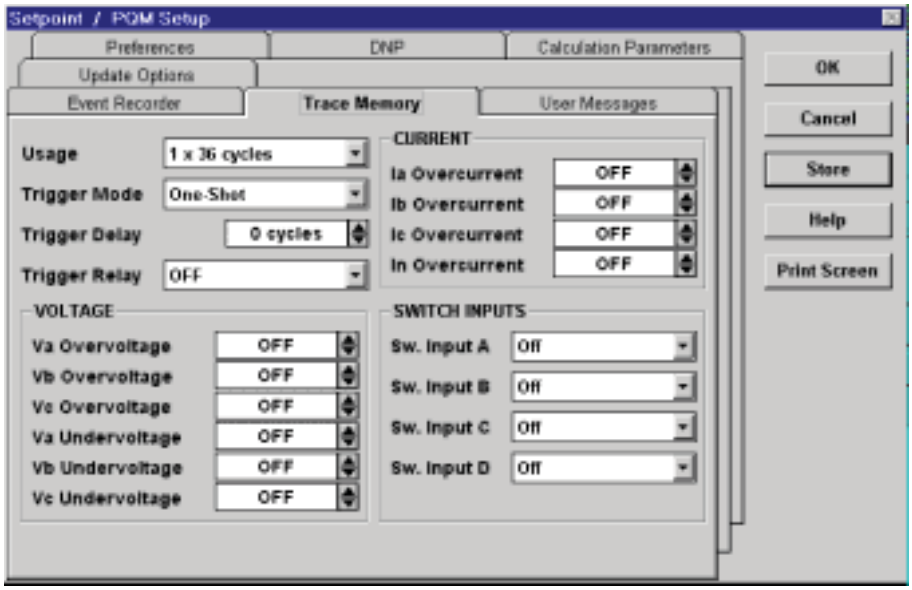

Figure 1–9: TRACE MEMORY TRIGGERS

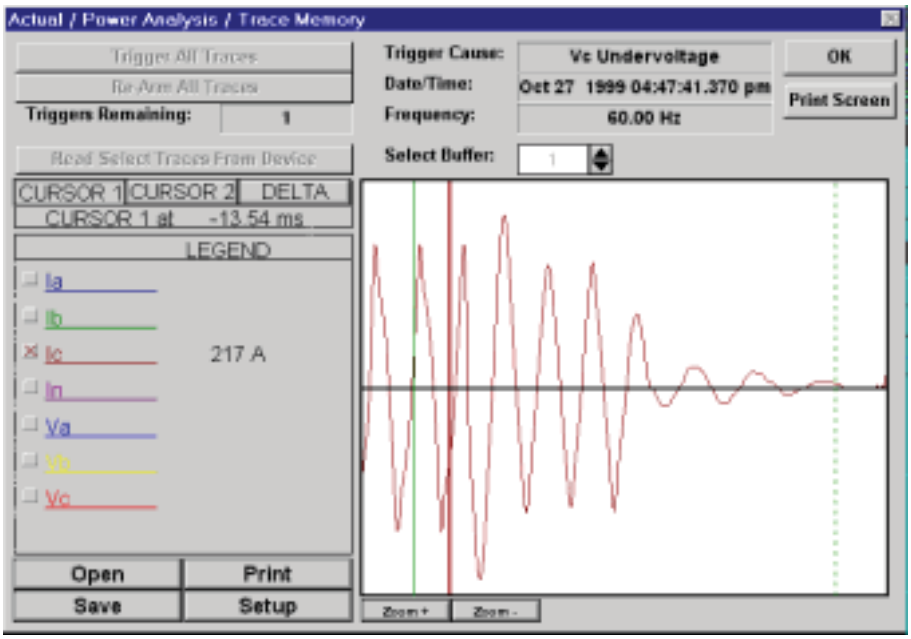

Figure 1–10: TRACE MEMORY CAPTURE

1.2.4 PQMPC SOFTWARE

All data continuously gathered by the PQM can be transferred to a third party software program for display, control, or analysis through the communications interface. The PQMPC software makes this data immediately useful and assists in programming the PQM. Some of the tasks that can be executed using the PQMPC software package are:

- read metered data
- monitor system status
- change PQM setpoints on-line
- save setpoints to a file and download into any PQM
- capture and display voltage and current wave shapes for analysis
- record demand profiles for various measured quantities
- troubleshoot communication problems with a built in communications debugging tool
- print all graphs, charts, setpoints, and actual data

The PQMPC software is fully described in Chapter 6: SOFTWARE.

1.2.5 ORDER CODES

The order code for all options is: **PQM-T20-C-A**

Table 1–1: ORDER CODES

	PQM	✳	✳	✳	
Basic Unit	**PQM**	|	|	|	Basic Unit with display, all current/voltage/power measurements, 1 RS485 communication port, 1 RS232 communication port
Transducer Option		**T20**	|	|	4 isolated analog outputs, 0-20 mA and 4-20 mA assignable to all measured parameters, 4-20 mA analog input, 2nd RS485 communication port
		T1	|	|	4 isolated analog outputs, 0-1 mA assignable to all measured parameters, 4-20 mA analog input, 2nd RS485 communication port
Control Option			**C**	|	3 additional programmable output relays (for a total of 4), 4 programmable switch inputs
Power Analysis Option				**A**	Harmonic analysis, triggered trace memory, waveform capture, event recorder, data logger

Modifications (consult the factory for any additional modification costs):

- MOD 500: Portable test/carrying case
- MOD 501: 20 to 60 V DC / 20 to 48 V AC control power
- MOD 502: Tropicalization
- MOD 504: Removable terminal blocks
- MOD 505: PQM Remote: Base Unit with Detachable Faceplate
- MOD 506: 4 Step Capacitor Bank Switching
- MOD 507: –40°C to +60°C Extended Temperature Operation
- MOD 508: 269/565 Communication Protocol
- MOD 513: Class 1, Division 2 Operation
- MOD 516: PQM Remote: Base Unit only
- MOD 517: PQM Remote: Detachable Faceplate only

Accessories (consult the factory for any additional accessory costs):

- PQMPC Windows software (free upon request)
- RS232 to RS485 converter (required to connect a PC to the PQM RS485 ports)
- 2.25” collar for limited depth mounting
- RS485 terminating network
- PQM mounting plate to replace MTM Plus

Control Power:

- 90 to 300 V DC / 70 to 265 V AC standard
- 20 to 60 V DC / 20 to 48 V AC (MOD 501)

CURRENT INPUTS

CONVERSION: true rms, 64 samples/cycle
CT INPUT: 1 A and 5 A secondary
BURDEN: 0.2 VA
OVERLOAD: 20 × CT for 1 sec.
100 × CT for 0.2 sec.
RANGE: 1 to 150% of CT primary
FREQUENCY: up to 32nd harmonic
ACCURACY: ±0.2% of full scale

VOLTAGE INPUTS

CONVERSION: true rms, 64 samples/cycle
VT PRI/SEC: direct or 120 to 72000:69 to 240
BURDEN: 2.2 MΩ
INPUT RANGE: 20 to 600 V AC
FULL SCALE: 150/600 V AC autoscaled
FREQUENCY: up to 32nd harmonic
ACCURACY: ±0.2% of full scale

SAMPLING MODES

	SAMPLES /CYCLE	INPUTS SAMPLED AT A TIME	DURATION (cycles)
METERED VALUES	64	ALL	2
TRACE MEMORY	16	ALL	continuous
HARMONIC SPECTRUM	256	1	1

SWITCH INPUTS

TYPE: dry contacts
RESISTANCE: 1000 Ω max ON resistance
OUTPUT: 24 V DC @ 2 mA (pulsed)
DURATION: 100 ms minimum

ANALOG OUTPUTS

	OUTPUT	
	0-1 mA (T1 Option)	4-20 mA (T20 Option)
MAX LOAD	2400 Ω	600 Ω
MAX OUTPUT	1.1 mA	21 mA

ACCURACY: ±1% of full scale reading
ISOLATION: 50 V isolated, active source

ANALOG INPUT

RANGE: 4 to 20 mA
ACCURACY: ±1% of full scale reading
INTERNAL BURDEN
RESISTANCE: 250 Ω

OUTPUT RELAYS

VOLTAGE		MAKE/CARRY		BREAK
		continuous	0.1 sec.	
RESISTIVE	30 VDC	5 A	30 A	5 A
	125 VDC	5 A	30 A	0.5 A
	250 VDC	5 A	30 A	0.3 A
INDUCTIVE (L/R = 7ms)	30 VDC	5 A	30 A	5 A
	125 VDC	5 A	30 A	0.25 A
	250 VDC	5 A	30 A	0.15 A
RESISTIVE	120 VAC	5 A	30 A	5 A
	250 VAC	5 A	30 A	5 A
INDUCTIVE PF = 0.4	120 VAC	5 A	30 A	5 A
	250 VAC	5 A	30 A	5 A

CONFIGURATION: Form C NO/NC
CONTACT MATERIAL: Silver Alloy

MEASURED VALUES

PARAMETER	ACCURACY (% of full scale)	RANGE
VOLTAGE	± 0.2%	20% to 100% of VT
CURRENT	± 0.2%	1% to 150% of CT
V UNBALANCE	± 1%	0 to 100%
I UNBALANCE	± 1%	0 to 100%
kW	see Accuracy Details	0 to ± 999,999.99 kW
kvar	see Accuracy Details	0 to ± 999,999.99 kvar
kVA	see Accuracy Details	0 to 999,999.99 kVA
kWh	see Accuracy Details	2^{32} kWh
kvarh	see Accuracy Details	2^{32} kvarh
kVAh	see Accuracy Details	2^{32} kVAh
PF	± 1.0%	± 0.00 to 1.00
FREQUENCY	± 0.02Hz	20.00 to 70.00 Hz
kW DEMAND	± 0.4%	0 to ± 999 999.99 kW
kvar DEMAND	± 0.4%	0 to ± 999 999.99 kvar
kVA DEMAND	± 0.4%	0 to 999 999.99 kVA
AMP DEMAND	± 0.2%	0 to 7500 A
AMPS THD	± 2.0%	0.0 to 100.0%
VOLTS THD	± 2.0%	0.0 to 100.0%
CREST FACTOR	± 0.4%	1 to 9.99

UNDERVOLTAGE MONITORING

REQ'D VOLTAGE:	> 20 V applied in all phases
PICKUP:	0.50 to 0.99 in steps of 0.01 × VT
DROPOUT:	103% of pickup
TIME DELAY:	0.5 to 600.0 in steps of 0.5 sec.
PHASES:	Any 1 / Any 2 / All 3 (programmable) have to be ≤ pickup to operate
ACCURACY:	Per voltage input
TIMING ACCURACY:	–0 / +1 sec.

OVERVOLTAGE MONITORING

PICKUP:	1.01 to 1.25 in steps of 0.01 × VT
DROPOUT:	97% of pickup
TIME DELAY:	0.5 to 600.0 in steps of 0.5 sec.
PHASES:	Any 1 / Any 2 / All 3 (programmable) must be ≥ pickup to operate
ACCURACY:	Per voltage input
TIMING ACCURACY:	–0 / +1 sec.

UNDERFREQUENCY MONITORING

REQ'D VOLTAGE:	> 30 V applied in phase A
PICKUP:	20.00 to 70.00 in steps of 0.01 Hz
DROPOUT:	Pickup + 0.03 Hz
TIME DELAY:	0.1 to 10.0 in steps of 0.1 sec.
ACCURACY:	0.02 Hz
TIMING ACCURACY:	±3 cycles

OVERFREQUENCY MONITORING

REQ'D VOLTAGE:	> 30 V applied in phase A
PICKUP:	20.00 to 70.00 in steps of 0.01 Hz
DROPOUT:	Pickup – 0.03 Hz
TIME DELAY:	0.0 to 10.0 in steps of 0.1 sec.
ACCURACY:	0.02 Hz
TIMING ACCURACY:	±3 cycles

POWER FACTOR MONITORING

REQ'D VOLTAGE:	> 20 V applied in phase A
PICKUP:	0.50 lag to 0.50 lead step 0.01
DROPOUT:	0.50 lag to 0.50 lead step 0.01
TIME DELAY:	0.5 to 600.0 in steps of 0.5 sec.
TIMING ACCURACY:	–0 / +1 sec.

DEMAND MONITORING

MEASURED VALUES:	Phase A/B/C/N Current (A) 3ϕ Real Power (kW) 3ϕ Reactive Power (kvar) 3ϕ Apparent Power (kVA)
MEASUREMENT TYPE:	
Thermal Exponential	90% response time (programmable): 5 to 60 min. step 1
Block interval:	(programmable): 5 to 60 min. step 1
Rolling Demand time interval:	(programmable): 5 to 60 min. step 1
PICKUP:	A: 10 to 7500 in steps of 1000 kW: 0.1 to 6500.0 in steps of 0.1 kvar: 0.1 to 6500.0 in steps of 0.1 kVA: 0.1 to 6500.0 in steps of 0.1

PULSE OUTPUT

PARAMETERS:	+kWh, –kWh, +kvarh, –kvarh, kVAh
INTERVAL:	1 to 65000 in steps of 1
PULSE WIDTH:	100 to 2000 ms in steps of 10 ms
MIN. PULSE INTERVAL:	500 ms
ACCURACY:	±10 ms

PULSE INPUT

MAX INPUTS:	4
MIN PULSE WIDTH:	150 ms
MIN OFF TIME:	200 ms

COMMUNICATIONS

COM1/COM2 TYPE:	RS485 2-wire, half duplex, isolated
COM3 TYPE:	RS232 9-pin
BAUD RATE:	1200 to 19200
PROTOCOLS:	Modbus® RTU; DNP 3.0
FUNCTIONS:	Read/write setpoints Read actual values Execute commands Read Device Status Loopback Test

CLOCK

ACCURACY:	±1 minute / 30 days at 25°C ± 5°C
RESOLUTION:	1 sec.

CONTROL POWER

INPUT:	90 to 300 V DC or 70 to 265 V AC, 50/60 Hz
POWER:	nominal 10 VA maximum 20 VA
HOLDUP:	100 ms typical (@ 120 V AC / 125 V DC)

WARNING

IT IS RECOMMENDED THAT THE PQM BE POWERED UP AT LEAST ONCE PER YEAR TO AVOID DETERIORATION OF THE ELECTROLYTIC CAPACITORS IN THE POWER SUPPLY.

TYPE TESTS

DIELECTRIC STRENGTH:
2.0 kV for 1 minute to relays, CTs, VTs, power supply

INSULATION RESISTANCE: IEC255-5, 500 V DC

TRANSIENTS:	ANSI C37.90.1 Oscillatory 2.5 kV/1 MHz ANSI C37.90.1 Fast Rise 5 kV/10 ns Ontario Hydro A-28M-82 IEC255-4 Impulse/High Frequency Disturbance Class III Level
IMPULSE TEST:	IEC 255-5 0.5 Joule 5kV
RFI:	50 MHz/15 W Transmitter
EMI:	C37.90.2 Electromagnetic Interference @ 150 MHz and 450 MHz, 10V/m
STATIC:	IEC 801-2 Static Discharge
HUMIDITY:	95% non-condensing
TEMPERATURE:	–10°C to +60°C ambient
ENVIRONMENT:	IEC 68-2-38 Temperature/Humidity Cycle

PACKAGING

SHIPPING BOX:	8½" × 6" × 6" (L×H×D) 21.5cm × 15.2cm × 15.2 cm (L×H×D)
SHIP WEIGHT:	5 lbs/2.3 kg

CERTIFICATION

ISO:	Manufactured under an ISO9001 registered program
UL:	recognized under E83849
CSA:	recognized under LR41286
CE:	Conforms to EN 55011 / CISPR 11, EN50082-2, IEC 947-1, IEC 1010-1

PQM POWER AND ENERGY ACCURACY

*Accuracy is a per curves ±1 digit on PQM display.

NOTE

SPECIFICATIONS ARE SUBJECT TO CHANGE WITHOUT NOTICE.

Specification Section 16493

Control Equipment

16493 Control Equipment

Product Datasheet

Catalog Home | Home Page | SEARCH

FXCS-0MMR3 -- **SEAL-X®**

Representative of product series but not exact configuration shown

FXB SERIES • CONTROLS
FACTORY SEALED COVER ASSEMBLIES

Product Specifications	
Product Type	CONTROL STATIONS
Harshest Environment	Class I, Div. 1, Groups C,D
Factory Sealed	Yes
Assembly	Cover Assembly
Control Devices	Maintained Push Pull Mushroom Button
Button Color	Red
Contact Arrangement	1-NO/ 1-NC
Name Plate	E-STOP or BLANK
File No.	E53360 E12379

File No.	LR11714

Complete_Location_Ratings	Click Here
Applications	Click Here
Features	Click Here
Electrical Rating	Click Here
Catalog Page Link	Click Here for Catalog Page
Parts & Accessories	Click Here
Notes	Click Here
Modifications	Click Here
Compressed Product Number	FXCS0MMR3

Although every attempt has been made to ensure the accuracy of this material, neither Killark nor Hubbell Incorporated (DE) assumes responsibility for any inaccuracies or omissions in the data presented. As a safety precaution, information utilized herein should be verified with the National Electrical Code and other sources.

Generally, Killark products are covered by one or more Third Party Certifiers. There may be instances where not all products on a particular catalog page containing a certifier's logo are listed. When certification information is required, consult Killark or refer to the appropriate certifier for listings.

Since conditions of use of the product are outside of the care, custody and control of Killark, the purchaser should determine product suitability for their intended use, and assume all risks and liability whatsoever in connection therewith.

16493 Control Equipment

Product Datasheet

Catalog Home Home Page

SEARCH

FXCS-2S3C4 -- **SEAL-X®**

FXB SERIES • CONTROLS
FACTORY SEALED COVER ASSEMBLIES

Product Specifications	
Product Type	CONTROL STATIONS
Harshest Environment	Class I, Div. 1, Groups C,D
Factory Sealed	Yes
Assembly	Complete
Control Devices	Selector Switch
Selector Switch Operation	3 Position - Maintained
Wiring Entry	3/4" Dead End
Contact Arrangement	1-NO/ 1-NC
Name Plate	BLANK or H-O-A
	E53360 E12379

File No.	
File No.	LR11714

Complete_Location_Ratings	Click Here
Applications	Click Here
Features	Click Here
Electrical Rating	Click Here
Catalog Page Link	Click Here for Catalog Page
Parts & Accessories	Click Here
Notes	Click Here
Modifications	Click Here
Compressed Product Number	FXCS2S3C4

Although every attempt has been made to ensure the accuracy of this material, neither Killark nor Hubbell Incorporated (DE) assumes responsibility for any inaccuracies or omissions in the data presented. As a safety precaution, information utilized herein should be verified with the National Electrical Code

and other sources.

Generally, Killark products are covered by one or more Third Party Certifiers. There may be instances where not all products on a particular catalog page containing a certifier's logo are listed. When certification information is required, consult Killark or refer to the appropriate certifier for listings.

Since conditions of use of the product are outside of the care, custody and control of Killark, the purchaser should determine product suitability for their intended use, and assume all risks and liability whatsoever in connection therewith.

16493 Control Equipment

Product Datasheet

Catalog Home | Home Page | SEARCH

UGRGF108 -- **ACCEPTOR®**

ACCEPTOR® SERIES • PLUGS AND RECEPTACLES

GFI PROTECTED RECEPTACLE

Product Specifications	
Product Series	NEMA STRAIGHT BLADE
Device	Receptacle w/Back Box
Device Amperage	20
Application/Environment	Hazardous
Circuit Protection	GFI Protected
Voltage	125
Hub Arrangement - Gangs	Dead End - 1 Gang
Hub Size	0.75

Ground Fault	Yes
File No.	E53361
File No.	LR11715
Wt. Ea. Lbs.	9.78
Std. Pkg. Qty.	1
Catalog Page PDF Link	Click here for catalog page

Applications	**Click Here**
Features	**Product Features**
Compressed Product Number	UGRGF108
General Suitability	**Click Here**

Although every attempt has been made to ensure the accuracy of this material, neither Killark nor Hubbell Incorporated (DE) assumes responsibility for any inaccuracies or omissions in the data presented. As a safety precaution, information utilized herein should be verified with the National Electrical Code and other sources.

Generally, Killark products are covered by one or more Third Party Certifiers. There may be instances where not all products on a particular catalog page containing a certifier's logo are listed. When certification information is required, consult Killark or refer to the appropriate certifier for listings.

Since conditions of use of the product are outside of the care, custody and control of Killark, the purchaser should determine product suitability for their intended use, and assume all risks and liability whatsoever in connection therewith.

Specification Section 16500

Lighting

January 4, 2012
Transmittal Sheet

Project: WWTP IMPVT'S WENATCHEE

Lighting Submittals for Review & Approval Purposes

Contractor: Magnum Electric

Distributor: North Coast Electric/Pasco

One set of reviewed, signed submittals to be returned to J.C. Wright Lighting Sales, prior to release of any material for production and/or shipment purposes.

Contractor to confirm all voltages and color finishes prior to release by the distributor.

Please note: factory drawings for the Traxon and Lightwild material which are project specific will follow under seperate cover at a later date. Specification sheets included for these types at this time are for reference purposes only and are NOT to be used for installation purposes.

Project Manager: Sara Yochum
syochum@jcwrightlighting.com

Outside Sales Contact: Clint Shulenbarger
cshulenbarger@jcwrightlighting.com

Project: WWTP IMPVT'S WENATCHEE

Contents - January 4, 2012

Type	Factory	Description
A	Guth Lighting	ACS77-82-120-EB-PI/HL
AEM	Guth Lighting	ACS77-82-120-EB-PI/HL
AEM	Bodine	B50
B	Guth Lighting	ACS77-82-120-EB/MB90-HL
C	Lithonia Lighting	LHZ618 S 1 G SDA H0806 CC
D	Crouse Hinds	N2LPS12222
E	Crouse Hinds	EVLEDBX2201
F	Chloride	IXN50 (1) RWTHF12 (1)RWTHFE12
G	Guth Lighting	ACS67-82-120-EB/PI
GEM	Guth Lighting	ACS67-82-120-EB/PI/BDL500
K	Lightguard	DXLN2GW
L	Lithonia Lighting	WFL2 150M RM 120 LPI PE BVG DBL SCWA
A1	Traxon	XB.W2.5342100
A2	Traxon	XB.W2.5361100
A3	Traxon	XB.W2.5386100
A4	Traxon	XB.W2.5311100
A5	Traxon	XB.W1.5373100
A6.1	Lightwild	LW-TILE-FLOOR-RECT-2.4CW 24IN TILE
A6.2	Lightwild	LW-TILE-FLOOR-RECT-2.4CW 36IN TILE
A7	Traxon	XB.L3.5381100
A8	Lightwild	LUMPWRLT-M-WW-48.EXT,60 DEGREE
A9	Vistapro	SL5222-*-LC5ND-JBCP150
A10	SPJ Lighting	GDG-30-W-SQ- PVDS-80-***K-120V/FB-CPS-1
A11	McGraw Edison	ISS-70-MP-120-2SA-BZ-F-P-LP
A12	Bruck	135401-1 - 75' RUNS
A12	Bruck	135912
A12	Bruck	135910
A12	Bruck	70438
A13	Vistapro	1079-G-W-FL-M-120

Submitting Agency:	Description:	Type:
jcwrightlighting phone: 509-535-0098	**GUTH - ACS77-82-120-EB-PI/HL** Project: **WWTP IMPVT'S WENATCHEE** Notes: pendant stems by others	**A**

PLASCOLUME

Stainless Steel Fluorescent for Hazardous and Wet Applications

FEATURES
- High lumen package
- Stainless steel
- Prismatic DR acrylic lens
- 4 or 8 foot
- Hazardous or wet locations
- Low pressure hosedown

BENEFITS
- Corrosion resistant
- Excellent brightness control
- Resists abuse
- Requires less fixtures
- Toolless entry

APPLICATIONS
- Food processing
- Car wash
- Petrochemical plants
- Wastewater treatment
- Paper mills

Specifications/Features

GENERAL
- Remains leak-free when subjected to low pressure water washdown.
- Corrosion resistant stainless steel fixture.
- Fixture is listed to be installed in the 0° Nadir configuration, lens down.

CONSTRUCTION
- Housing formed entirely of 22 ga. 304 stainless with a mill (2B) finish.
- End caps riveted and silicone sealed to channel.
- Closed stainless steel rivets used exclusively to prevent leaks.
- Ballast mounted with weld studs to eliminate unnecessary penetrations of the housing.
- Supplied with 1/2" cast aluminum hubs. Optionall 3/4" and SS.

DOOR FRAME/LENS
- Lens extruded of 100% DR Virgin Acrylic with embossed prisms for brightness control.
- Lens is sealed against the housing with an extruded PVC gasket held in place with 304 Stainless C-channel which distributes the force of the clamps uniformly over the gasket.
- The lens frame is clamped to the body with six (ten on 8' housings) stainless "no tool" cam latches mounted to the housing with stainless closed rivets.
- Vandal resistant version uses polycarbonate lens.

One piece molded PVC gasket compression fit designed into 304 Stainless steel lens frame.

Stainless steel swivel latches secure lens and provide easy "toolless" access.

LISTINGS
- Listed "Wet Location, Covered Ceilings Only" with the HL version fixture listed "Hazardous Locations." Class I, Division 2, Groups A,B,C,D; Class II, Division 2, Group G; and Class III. Temperature code is T3C (40°C Ambient).
- Listed for use in Canada.

ELECTRICAL
- The 430MA ballast is energy saving Class P and appropriate to the lamp and voltage specified.
- In the 800MA versions the ballast is mounted to the body with aluminum heat radiators to prolong ballast life, and permit mounting.
- All fixtures carry the IBEW Union label to ensure quality.

Submitting Agency:	Description:	Type:
jcwrightlighting phone: 509-535-0098	**GUTH - ACS77-82-120-EB-PI/HL** Project: **WWTP IMPVT'S WENATCHEE** Notes: pendant stems by others	**A**

Photometrics

Coefficients of Utilization
Acrylic 2 Lamp, 40W Fluorescent ACS7762/120/HL

Ceiling Refl.	80%			50%			10%		
Wall Refl.	50	30	10	50	30	10	50	30	10
RCR	20% Effective Floor Cavity Reflectance								
1	.69	.66	.63	.63	.60	.58	.55	.54	.52
2	.61	.56	.53	.55	.52	.49	.49	.47	.45
3	.54	.49	.45	.50	.46	.43	.44	.42	.39
4	.48	.43	.39	.44	.40	.37	.40	.37	.34
5	.43	.38	.33	.40	.35	.32	.36	.32	.30
6	.39	.33	.29	.36	.32	.28	.33	.29	.26
7	.35	.30	.26	.33	.28	.24	.30	.26	.23
8	.32	.26	.22	.29	.25	.21	.27	.23	.20
9	.29	.23	.20	.27	.22	.19	.24	.21	.18
10	.25	.20	.16	.24	.19	.16	.21	.17	.15

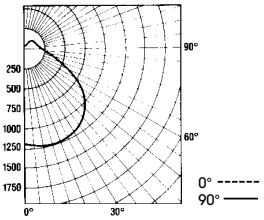

S/MH Ratio 1.3:1
Total Lamp Lumens 6,300
Fixture Efficiency 68%

Report No.
P10568A

Coefficients of Utilization
Vandal Proof 2 Lamp, 40W Fluorescent VPS6762/120/EG

Ceiling Refl.	80%			50%			10%		
Wall Refl.	50	30	10	50	30	10	50	30	10
RCR	20% Effective Floor Cavity Reflectance								
1	.63	.60	.57	.56	.54	.52	.49	.48	.46
2	.54	.49	.45	.48	.45	.42	.42	.40	.38
3	.47	.41	.37	.42	.38	.34	.37	.34	.31
4	.41	.35	.30	.37	.32	.29	.33	.29	.26
5	.37	.30	.26	.33	.28	.24	.29	.26	.23
6	.33	.27	.22	.30	.25	.21	.27	.23	.20
7	.30	.24	.19	.27	.22	.18	.24	.20	.17
8	.27	.21	.17	.25	.20	.16	.22	.18	.15
9	.25	.19	.15	.23	.18	.14	.20	.17	.14
10	.23	.17	.14	.21	.16	.13	.19	.15	.12

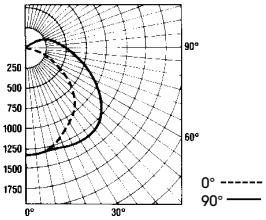

S/MH Ratio 1.4:1
Total Lamp Lumens 6,300
Fixture Efficiency 65%

Report No.
P10663

Dimensions

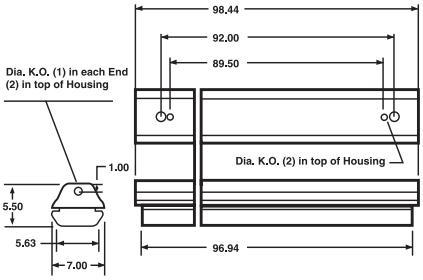

QUICK CHAIN MOUNTING "/QCH"

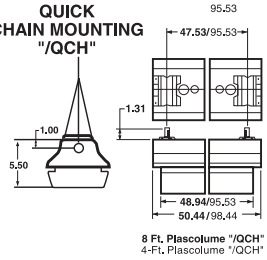

ADJUSTABLE MOUNTING BRACKETS "/AMB"

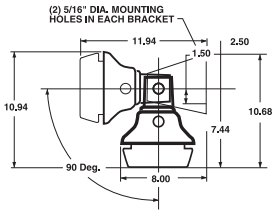

Plascolume Catalog Numbers

ACS77 - 82 - 120 - EB

VOLTAGE
120
277

TYPE
ACS77 - Hazardous Location
ACS67 - Wet Location
VPS67* - Vandal Proof/Wet Location

LAMPS/SIZE

4 FOOT
60 - 1-F40 T12
62 - 2-F40 T12
64 - 1-F48 T12/HO
65 - 2-F48 T12/HO
80 - 1-F32 T8
82 - 2-F32 T8

8 FOOT
63 - 4-F40 T12
66 - 1-F96 T12/HO
67 - 2-F96 T12/HO
83 - 4-F32 T8
86 - 1-F96 T8/HO
87 - 2-F96 T8/HO
88 - 1-F96 T8
89 - 2-F96 T8

* 4' only.

PIPE MOUNTING "/PI"

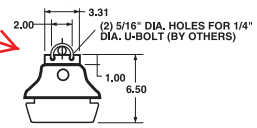

CHAIN MOUNTING BRACKETS "/CH"

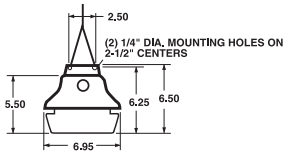

WALLMOUNT "/MB90"

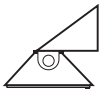

Options

"/FF" - Fast Acting Fixture Fuse, Buss GLR
"/SFF" - Slow Blow (Fusetron) Fuse, Buss GMF
"/0°" - 0° operation on 430MA ballast
"/ES" - Energy Saving Ballast on 800MA Unit (8' unit only)
"/EB" - For Electronic Ballast
"/CH" - Stainless Steel Chain Mounting Brackets (one pair)
"/AMB" - Stainless Steel Adjustable Mounting Brackets (one pair)*
"/PI" - Pipe Mounting (PIPE NOT SUPPLIED)
"/SH" - 3/4" Stainless Steel Hub
"/AH" -3/4" Cast Aluminum Hub
"/QCH" - Stainless Steel Quick Chain Mounting
"/MB90" - Wall Mount

*HAZARDOUS LOCATIONS FIXTURE APPROVED FOR CONDUIT, CHAIN BRACKET PIPE AND WALL MOUNTING ONLY.

Guth utilized the services of U.L. and ETL for listing products.
Specifications and data are subject to change without notice.

OCTRON® 800 ECOLOGIC®

Fluorescent Lamps

OCTRON 800 ECOLOGIC T8 lamps offer a high quality solution for general purpose fluorescent lighting applications where color is important. These lamps are available in a wide range of color temperatures: 3000K, 3500K, 4100K and 5000K that feature improved color rendering and lumen maintenance when compared to 700 series lamps. When paired with QUICKTRONIC electronic ballasts, these systems are a good alternative to T12 fluorescent systems and are covered by the comprehensive QUICK 60+ system warranty.

Key Features & Benefits

- Passes Federal TCLP test*
- Energy efficient T8 lamp
- Made in the USA
- Lead free
- RoHS compliant
- Compatible with QUICKTRONIC® electronic ballasts
- QUICK 60+® System Warranty

ECOLOGIC® is a comprehensive program of OSRAM SYLVANIA focused on addressing environmental issues at all stages of lamp life.

* Regulations may vary. Check your local and state regulations.

RoHS compliant
This light source meets restrictions on hazardous substances.

MADE IN USA

LEAD-FREE

ECOLOGIC®

Product Offering

Ordering Abbreviation	Wattage	Lumens	CRI
F017/800/ECO	17	1350	82
F025/800/ECO	25	2150	82
F032/800/ECO	32	2950	85
F040/800/ECO	40	3650	82
F096/800/ECO	96	5900	82

Application Information

Applications

- Cove
- Recessed troffer
- Strip light fixture
- Valance

Application Notes

1. Lamps starting down to -20°F (dependent on ballast)
2. Operation below 50°F may affect lumen output or lamp operation.
3. For cold temperature applications, use in enclosed fixture or use tube to maximize lamp performance.
4. For rapid start operation, check with ballast manufacturer for ground plane requirement.
5. For maximum energy savings, operate on electronic instant start ballast.

Ordering Information

Item Number	Ordering Abbreviation	Nominal Length	Initial Lumens	Mean Lumens[1]	Rated Life: Instant Start 3 hrs/ start	Rated Life: Instant Start 12 hrs/ start	Rated Life: Programmed Rapid Start 3 hrs/ start	Rated Life: Programmed Rapid Start 12 hrs/ start	CCT	CRI
22135	F017/830/ECO	24	1,350	1,269	24,000	28,000	30,000	36,000	3000K	82
22136	F017/835/ECO	24	1,350	1,269	24,000	28,000	30,000	36,000	3500K	82
22137	F017/841/ECO	24	1,350	1,269	24,000	28,000	30,000	36,000	4100K	82
22138	F025/830/ECO	36	2,150	2,021	24,000	28,000	30,000	36,000	3000K	82
22139	F025/835/ECO	36	2,150	2,021	24,000	28,000	30,000	36,000	3500K	82
22140	F025/841/ECO	36	2,150	2,021	24,000	28,000	30,000	36,000	4100K	82
21777	F032/830/ECO	48	2,950	2,773	24,000	28,000	30,000	36,000	3000K	85
21779	F032/835/ECO	48	2,950	2,773	24,000	28,000	30,000	36,000	3500K	85
21781	F032/841/ECO	48	2,950	2,773	24,000	28,000	30,000	36,000	4100K	85
22143	F032/850/ECO	48	2,950	2,773	24,000	28,000	30,000	36,000	5000K	80
22144	F040/830/ECO	60	3,650	3,431	24,000	28,000	30,000	36,000	3000K	82
22145	F040/835/ECO	60	3,650	3,431	24,000	28,000	30,000	36,000	3500K	82
22146	F040/841/ECO	60	3,650	3,431	24,000	28,000	30,000	36,000	4100K	82
22147	F096/830/ECO	96	5,900	5,428	18,000	24,000			3000K	82
22148	F096/835/ECO	96	5,900	5,428	18,000	24,000			3500K	82
22149	F096/841/ECO	96	5,900	5,428	18,000	24,000			4100K	82
22173	F096/850/ECO	96	5,900	5,428	18,000	24,000			5000K	82

1. Mean lumens measured at 40% of rated life.

Ordering Guide

F0	32	/	8	35	/	ECO
Fluorescent OCTRON	Wattage: 17, 25, 32, 40 or 96 watts		8 = 80–85 CRI	30 = 3000K CCT 35 = 3500K CCT 41 = 4100K CCT 50 = 5000K CCT		ECOLOGIC

Technical Information

Typical Fluorescent Lamp Mortality

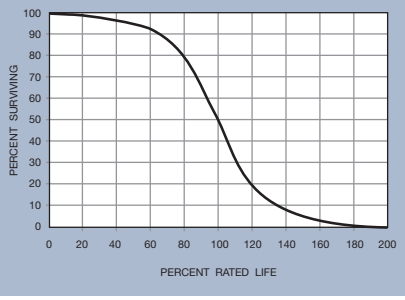

Related Literature

For maximum energy savings consider pairing with the following electronic ballast:

Ballast Technology Applications & Specification Guide (Literature Code: ECS-Electronic2009)

QUICK 60+® System Warranty (Literature Code: ECS140)

Specification Data

Catalog #

Type

Project

Comments

Prepared by

Date

Sample Specification

Lamp(s) shall be an OCTRON® ECOLOGIC® lamp(s) (F017/ECO, F025/ECO, F032/ECO, F040/ECO and F096/ECO) having medium bi-pin bases. Lamp(s) shall be designed to pass the Federal TCLP test in force at the time of manufacture. Lamp(s) shall have a correlated color temperature of (3000K, 3500K, 4100K or 5000K) and a CRI of (80, 82 or 85). The OCTRON lamp(s) shall be operated on dedicated QUICKTRONIC® ballast(s) with complete system warranty from one manufacturer covering lamp(s) and ballast(s).

United States
OSRAM SYLVANIA
100 Endicott Street
Danvers, MA 01923

Trade
Phone: 1-800-255-5042
Fax: 1-800-255-5043

National Accounts
Phone: 1-800-562-4671
Fax: 1-800-562-4674

OEM/Special Markets
Phone: 1-800-762-7191
Fax: 1-800-762-7192

Display/Optic
Phone: 1-888-677-2627
Fax: 1-800-762-7192

Canada
OSRAM SYLVANIA LTD.
2001 Drew Road
Mississauga, ON L5S 1S4

Trade
Phone: 1-800-263-2852
Fax: 1-800-667-6772

OEM/Special Markets/Display/Optic
Phone: 1-800-265-2852
Fax: 1-800-667-6772

www.sylvania.com

© 2010 OSRAM SYLVANIA 11/10 Photography © P.I.Corp

SYLVANIA is a registered trademark of OSRAM SYLVANIA Inc.
SEE THE WORLD IN A NEW LIGHT is a registered trademark of OSRAM SYLVANIA Inc.
OCTRON, ECOLOGIC and QUICK 60+ are registered trademarks of OSRAM SYLVANIA Inc.
QUICKTRONIC is a registered trademark of OSRAM GmbH.

Submitting Agency:	Description:	Type:
jcwrightlighting phone: 509-535-0098	**GUTH - ACS77-82-120-EB-PI/HL** Project: **WWTP IMPVT'S WENATCHEE** Notes: includes mtg bracket	**AEM**

Bodine B50 emergency, field installed by contractor

PLASCOLUME

Stainless Steel Fluorescent for Hazardous and Wet Applications

FEATURES
- High lumen package
- Stainless steel
- Prismatic DR acrylic lens
- 4 or 8 foot
- Hazardous or wet locations
- Low pressure hosedown

BENEFITS
- Corrosion resistant
- Excellent brightness control
- Resists abuse
- Requires less fixtures
- Toolless entry

APPLICATIONS
- Food processing
- Car wash
- Petrochemical plants
- Wastewater treatment
- Paper mills

Specifications/Features

GENERAL
- Remains leak-free when subjected to low pressure water washdown.
- Corrosion resistant stainless steel fixture.
- Fixture is listed to be installed in the 0° Nadir configuration, lens down.

CONSTRUCTION
- Housing formed entirely of 22 ga. 304 stainless with a mill (2B) finish.
- End caps riveted and silicone sealed to channel.
- Closed stainless steel rivets used exclusively to prevent leaks.
- Ballast mounted with weld studs to eliminate unnecessary penetrations of the housing.
- Supplied with 1/2" cast aluminum hubs. Optionall 3/4" and SS.

DOOR FRAME/LENS
- Lens extruded of 100% DR Virgin Acrylic with embossed prisms for brightness control.
- Lens is sealed against the housing with an extruded PVC gasket held in place with 304 Stainless C-channel which distributes the force of the clamps uniformly over the gasket.
- The lens frame is clamped to the body with six (ten on 8' housings) stainless "no tool" cam latches mounted to the housing with stainless closed rivets.
- Vandal resistant version uses polycarbonate lens.

One piece molded PVC gasket compression fit designed into 304 Stainless steel lens frame.

Stainless steel swivel latches secure lens and provide easy "toolless" access.

LISTINGS
- Listed "Wet Location, Covered Ceilings Only" with the HL version fixture listed "Hazardous Locations." Class I, Division 2, Groups A,B,C,D; Class II, Division 2, Group G; and Class III. Temperature code is T3C (40°C Ambient).
- Listed for use in Canada.

ELECTRICAL
- The 430MA ballast is energy saving Class P and appropriate to the lamp and voltage specified.
- In the 800MA versions the ballast is mounted to the body with aluminum heat radiators to prolong ballast life, and permit mounting.
- All fixtures carry the IBEW Union label to ensure quality.

Submitting Agency:	Description:	Type:
jcwrightlighting phone: 509-535-0098	**GUTH - ACS77-82-120-EB-PI/HL** Project: **WWTP IMPVT'S WENATCHEE** Notes: includes mtg bracket	**AEM**

Photometrics

Coefficients of Utilization
Acrylic 2 Lamp, 40W Fluorescent ACS7762/120/HL

Ceiling Refl.	80%			50%			10%		
Wall Refl.	50	30	10	50	30	10	50	30	10
RCR	20% Effective Floor Cavity Reflectance								
1	.69	.66	.63	.63	.60	.58	.55	.54	.52
2	.61	.56	.53	.55	.52	.49	.49	.47	.45
3	.54	.49	.45	.50	.46	.43	.44	.42	.39
4	.48	.43	.39	.44	.40	.37	.40	.37	.34
5	.43	.38	.33	.40	.35	.32	.36	.32	.30
6	.39	.33	.29	.36	.32	.28	.33	.29	.26
7	.35	.30	.26	.33	.28	.24	.30	.26	.23
8	.32	.26	.22	.29	.25	.21	.27	.23	.20
9	.29	.23	.20	.27	.22	.19	.24	.21	.18
10	.25	.20	.16	.24	.19	.16	.21	.17	.15

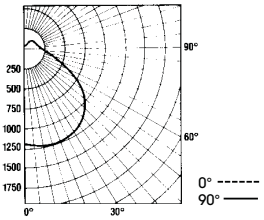

S/MH Ratio 1.3:1
Total Lamp Lumens 6,300
Fixture Efficiency 68%

Report No.
P10568A

Coefficients of Utilization
Vandal Proof 2 Lamp, 40W Fluorescent VPS6762/120/EG

Ceiling Refl.	80%			50%			10%		
Wall Refl.	50	30	10	50	30	10	50	30	10
RCR	20% Effective Floor Cavity Reflectance								
1	.63	.60	.57	.56	.54	.52	.49	.48	.46
2	.54	.49	.45	.48	.45	.42	.42	.40	.38
3	.47	.41	.37	.42	.38	.34	.37	.34	.31
4	.41	.35	.30	.37	.32	.29	.33	.29	.26
5	.37	.30	.26	.33	.28	.24	.29	.26	.23
6	.33	.27	.22	.30	.25	.21	.27	.23	.20
7	.30	.24	.19	.27	.22	.18	.24	.20	.17
8	.27	.21	.17	.25	.20	.16	.22	.18	.15
9	.25	.19	.15	.23	.18	.14	.20	.17	.14
10	.23	.17	.14	.21	.16	.13	.19	.15	.12

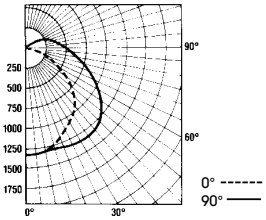

S/MH Ratio 1.4:1
Total Lamp Lumens 6,300
Fixture Efficiency 65%

Report No.
P10663

Dimensions

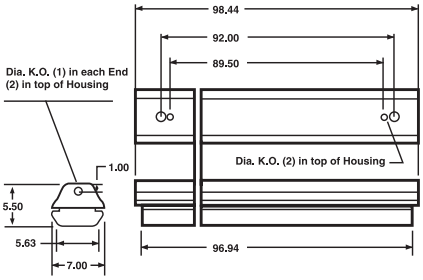

QUICK CHAIN MOUNTING "/QCH"

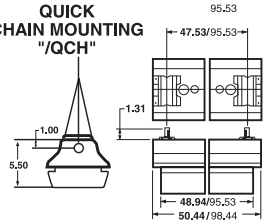

ADJUSTABLE MOUNTING BRACKETS "/AMB"

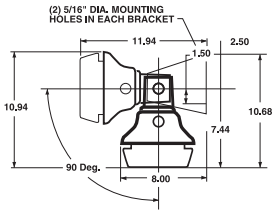

PIPE MOUNTING "/PI"

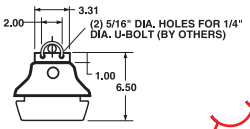

CHAIN MOUNTING BRACKETS "/CH"

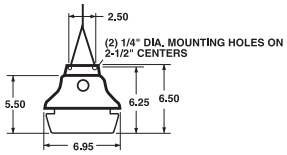

WALLMOUNT "/MB90"

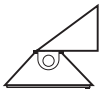

Plascolume Catalog Numbers

ACS77 - 82 - 120 - EB

VOLTAGE
120
277

TYPE
ACS77 - Hazardous Location
ACS67 - Wet Location
VPS67* - Vandal Proof/Wet Location

LAMPS/SIZE

4 FOOT
60 - 1-F40 T12
62 - 2-F40 T12
64 - 1-F48 T12/HO
65 - 2-F48 T12/HO
80 - 1-F32 T8
82 - 2-F32 T8

8 FOOT
63 - 4-F40 T12
66 - 1-F96 T12/HO
67 - 2-F96 T12/HO
83 - 4-F32 T8
86 - 1-F96 T8/HO
87 - 2-F96 T8/HO
88 - 1-F96 T8
89 - 2-F96 T8

* 4' only.

Options

"/FF" - Fast Acting Fixture Fuse, Buss GLR
"/SFF" - Slow Blow (Fusetron) Fuse, Buss GMF
"/0°" - 0° operation on 430MA ballast
"/ES" - Energy Saving Ballast on 800MA Unit (8' unit only)
"/EB" - For Electronic Ballast
"/CH" - Stainless Steel Chain Mounting Brackets (one pair)
"/AMB" - Stainless Steel Adjustable Mounting Brackets (one pair)*
"/PI" - Pipe Mounting (PIPE NOT SUPPLIED)
"/SH" - 3/4" Stainless Steel Hub
"/AH" -3/4" Cast Aluminum Hub
"/QCH" - Stainless Steel Quick Chain Mounting
"/MB90" - Wall Mount

*HAZARDOUS LOCATIONS FIXTURE APPROVED FOR CONDUIT, CHAIN BRACKET PIPE AND WALL MOUNTING ONLY.

Guth utilized the services of U.L. and ETL for listing products.
Specifications and data are subject to change without notice.

Submitting Agency:	Description: B50 Project: WWTP IMPVT'S WENATCHEE Notes: emergency battery for field installation by contractor	Type:
jcwrightlighting phone: 509-535-0098		AEM

B50

Fluorescent Emergency Ballast

PHILIPS bodine

A Division Of Philips Electronics North America Corporation

Specification grade;
One- or two-lamp emergency illumination;
End-of-lamp-life compatible

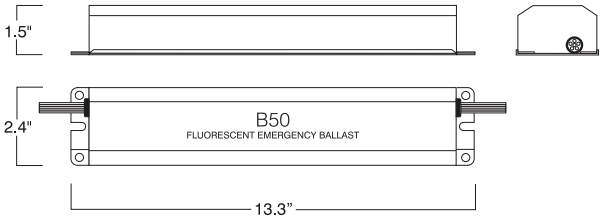

Product Summary

UL LISTED
Factory or Field Installation

Illumination Time
90 Minutes

Initial Light Output
Up to 1400 Lumens

Full Warranty
5 Years (NOT pro-rata)

Dual Input Voltage
120/277 VAC, 60 Hz

AC Input Current
280 mA

AC Input Power Rating
4.0 Watts

Test Switch
Single Pole

Battery
High-Temperature,
Maintenance-Free
Nickel-Cadmium Battery
7- to 10-Year Life Expectancy

Battery Charging Current
280 mA

Recharge Time
24 Hours

Charging Indicator Light
LED

Temperature Rating (Ambient)
0°C to +55°C
(32°F to 131°F)

Dimensions
13.3" x 2.4" x 1.5"
(339 mm x 60 mm x 38 mm)
Mounting Center 12.8" (325 mm)

Weight
3.4 lbs. (1.54 kg)

Emergency ballasts can be modified to accomodate special voltages, frequencies and longer run times.

APPLICATION

The B50 fluorescent emergency ballast works in conjunction with an AC ballast to convert new or existing fluorescent fixtures into emergency lighting. The emergency ballast consists of a high-temperature nickel-cadmium battery, charger and electronic circuitry in one compact red case. The B50 can be used with most 17 - 215 W (2' - 8') T8, T9, T10 or T12 fluorescent lamps without integral starters, including U-shaped, HO, VHO, circline and energy-saving, and (4-pin) long compacts. One- or two-lamp operation may be selected (see Table 1). It is also compatible with most one-, two-, three- and four-lamp electronic, standard, energy-saving and dimming AC ballasts. If used in an emergency-only fixture, no AC ballast is necessary. The B50 is suitable for indoor locations. It is not suitable for air handling heated air outlets or wet, damp or hazardous locations. For information about specific lamp and ballast compatibility, please call the factory.

OPERATION

When AC power fails, the B50 immediately switches to the emergency mode, operating either one or two lamps at a reduced lumen output for a minimum of 90 minutes. When AC power is restored, the emergency ballast automatically returns to the charging mode and, using a patented circuit, delays AC ballast operation for approximately three seconds to prevent false tripping of the AC ballast end-of-lamp-life shutdown circuits.

INSTALLATION

The B50 does not affect normal fixture operation and may be used with either a switched or unswitched fixture. If a switched fixture is used, an unswitched hot lead must be connected to the emergency ballast. The emergency ballast must be fed from the same branch circuit as the AC ballast. The B50 may be installed inside, on top of or remote from the fixture. The emergency ballast may be remotely installed up to half the distance the AC ballast manufacturer recommends remoting the AC ballast from the lamp or up to 50 feet, whichever is less. Installation is not recommended with fixtures where the ambient temperature may fall below 0°C.

UL and CODE COMPLIANCE

The B50 has been tested by Underwriters Laboratories in accordance with the standards set forth in UL 924, "Emergency Lighting and Power Equipment," and is UL Listed for factory or field installation. Emergency illumination time exceeds the National Electrical Code (NFPA–LSC) and UL 90-minute requirements.

Specifiers Reference

Project _____ Type _____ Model No. _____

Comments _____

L2000053

04/26/10 © Philips Emergency Lighting
P.O. Box 460 Collierville, TN USA 38027-0460
Sales 800-223-5728 FAX 901-853-5009
Tech. Support 888-263-4638
www.philips.com/bodine

Submitting Agency:	Description: B50 Project: WWTP IMPVT'S WENATCHEE Notes: emergency battery for field installation by contractor	Type:
jcwrightlighting phone: 509-535-0098		AEM

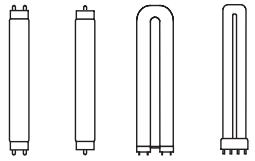

B50

Fluorescent Emergency Ballast

Specification grade;
One- or two-lamp emergency illumination;
End-of-lamp-life compatible

EMERGENCY ILLUMINATION

Depending on the number (one or two), wattage and type of lamps selected, the B50 produces up to 1400 lumens initial emergency light output (see Table 2). If two-lamp operation is selected, light output is evenly divided between the lamps for better distribution of emergency illumination.

SPECIFICATION

Emergency lighting shall be provided by using a standard fluorescent fixture equipped with a Philips Bodine B50 emergency ballast. This emergency ballast shall consist of a high-temperature, maintenance-free nickel-cadmium battery, charger and electronic circuitry contained in one 13 3/8" x 2 3/8" x 1 1/2" red metal case. A solid-state charging indicator light to monitor the charger and battery, a single-pole test switch and installation hardware shall be provided. The emergency ballast, using a patented circuit, shall delay AC ballast operation for approximately three seconds to prevent false tripping of AC ballast end-of-lamp-life shutdown circuits. The emergency ballast shall be capable of operating [one or two] _____ fluorescent lamp(s) (see Table 1) at _____lumens (see Table 2) initial light output in the emergency mode for a minimum of 90 minutes. It shall be suitable for indoor locations. The B50 shall have 4 Watts of input power and a 24 Watt-hour battery capacity and shall exceed emergency standards set forth by the current NEC. The emergency ballast shall be UL Listed for installation inside, on top of or remote from the fixture and shall be warranted for a full five years from date of purchase.

WARRANTY

Model B50 is warranted for five (5) full years from date of purchase. This warranty covers only properly installed Philips Bodine emergency ballasts used under normal conditions. For the warranty period, Philips Emergency Lighting will, at its option, repair or replace without charge a defective emergency ballast, provided it is returned to the factory transportation prepaid and our inspection determines it to be defective under terms of the warranty. Repair or replacement, as stated above, shall constitute the purchaser's exclusive warranty, which does not extend to transportation, installation, labor or any other charges; nor does it apply to any equipment of another manufacturer used in conjunction with the emergency ballast.

Table 1 - Lamp Compatibility

LAMP (T8, T10, T12)	BASE	WATTAGE (Length)	NO. of LAMPS (EMERGENCY)
1" (T8) 1¼" (T10) 1½" (T12)	Single or Bipin	17 - 24 W	1
			2
		32 - 40 W (2' - 4')	1
			2
		40 - 215 W (5' - 8')	1

Table 2 - Initial Lumen Output

LAMP	LUMENS	
	1 Lamp	2 Lamps
FO25, FBO24 T8	1250	1100
FO32, FBO31 T8	1350	1350
FO96 T8	1400	
FO17, FBO16	1050	950
F40T12, F40/U	1100	1100
F48T12/HO	1200	
F96T12, HO, VHO	1100	
F39/36BX, PL-L 36 W, DULUX L39 W	1100	1100
F28 2D/4P	1100	1100
F38 2D/4P	1000	1100
F27/24BX, PL-L 24 W, DULUX L 27 W		1000
F40T12/ES (34 W)	975	975
PL-L 40 W, F40/30BX, F50BX, PL-L 50 W, DULUX L55 W	900	

L2000053

04/26/10 © Philips Emergency Lighting
P.O. Box 460 Collierville, TN USA 38027-0460
Sales 800-223-5728 FAX 901-853-5009
Tech. Support 888-263-4638
www.philips.com/bodine

For the most current technical information and notices, please visit TechNotes on our website.

OCTRON® 800 ECOLOGIC®

Fluorescent Lamps

OCTRON 800 ECOLOGIC T8 lamps offer a high quality solution for general purpose fluorescent lighting applications where color is important. These lamps are available in a wide range of color temperatures: 3000K, 3500K, 4100K and 5000K that feature improved color rendering and lumen maintenance when compared to 700 series lamps. When paired with QUICKTRONIC electronic ballasts, these systems are a good alternative to T12 fluorescent systems and are covered by the comprehensive QUICK 60+ system warranty.

Key Features & Benefits

- Passes Federal TCLP test*
- Energy efficient T8 lamp
- Made in the USA
- Lead free
- RoHS compliant
- Compatible with QUICKTRONIC® electronic ballasts
- QUICK 60+® System Warranty

ECOLOGIC® is a comprehensive program of OSRAM SYLVANIA focused on addressing environmental issues at all stages of lamp life.

* Regulations may vary. Check your local and state regulations.

RoHS compliant
This light source meets restrictions on hazardous substances.

MADE IN USA

LEAD-FREE

ECOLOGIC®

Product Offering

Ordering Abbreviation	Wattage	Lumens	CRI
F017/800/ECO	17	1350	82
F025/800/ECO	25	2150	82
F032/800/ECO	32	2950	85
F040/800/ECO	40	3650	82
F096/800/ECO	96	5900	82

Application Information

Applications

- Cove
- Recessed troffer
- Strip light fixture
- Valance

Application Notes

1. Lamps starting down to -20°F (dependent on ballast)
2. Operation below 50°F may affect lumen output or lamp operation.
3. For cold temperature applications, use in enclosed fixture or use tube to maximize lamp performance.
4. For rapid start operation, check with ballast manufacturer for ground plane requirement.
5. For maximum energy savings, operate on electronic instant start ballast.

Ordering Information

Item Number	Ordering Abbreviation	Nominal Length	Initial Lumens	Mean Lumens[1]	Rated Life: Instant Start 3 hrs/ start	Rated Life: Instant Start 12 hrs/ start	Rated Life: Programmed Rapid Start 3 hrs/ start	Rated Life: Programmed Rapid Start 12 hrs/ start	CCT	CRI
22135	F017/830/ECO	24	1,350	1,269	24,000	28,000	30,000	36,000	3000K	82
22136	F017/835/ECO	24	1,350	1,269	24,000	28,000	30,000	36,000	3500K	82
22137	F017/841/ECO	24	1,350	1,269	24,000	28,000	30,000	36,000	4100K	82
22138	F025/830/ECO	36	2,150	2,021	24,000	28,000	30,000	36,000	3000K	82
22139	F025/835/ECO	36	2,150	2,021	24,000	28,000	30,000	36,000	3500K	82
22140	F025/841/ECO	36	2,150	2,021	24,000	28,000	30,000	36,000	4100K	82
21777	F032/830/ECO	48	2,950	2,773	24,000	28,000	30,000	36,000	3000K	85
21779	F032/835/ECO	48	2,950	2,773	24,000	28,000	30,000	36,000	3500K	85
21781	F032/841/ECO	48	2,950	2,773	24,000	28,000	30,000	36,000	4100K	85
22143	F032/850/ECO	48	2,950	2,773	24,000	28,000	30,000	36,000	5000K	80
22144	F040/830/ECO	60	3,650	3,431	24,000	28,000	30,000	36,000	3000K	82
22145	F040/835/ECO	60	3,650	3,431	24,000	28,000	30,000	36,000	3500K	82
22146	F040/841/ECO	60	3,650	3,431	24,000	28,000	30,000	36,000	4100K	82
22147	F096/830/ECO	96	5,900	5,428	18,000	24,000			3000K	82
22148	F096/835/ECO	96	5,900	5,428	18,000	24,000			3500K	82
22149	F096/841/ECO	96	5,900	5,428	18,000	24,000			4100K	82
22173	F096/850/ECO	96	5,900	5,428	18,000	24,000			5000K	82

1. Mean lumens measured at 40% of rated life.

Ordering Guide

F0	32	/	8	35	/	ECO
Fluorescent OCTRON	Wattage: 17, 25, 32, 40 or 96 watts		8 = 80–85 CRI	30 = 3000K CCT 35 = 3500K CCT 41 = 4100K CCT 50 = 5000K CCT		ECOLOGIC

Technical Information

Typical Fluorescent Lamp Mortality

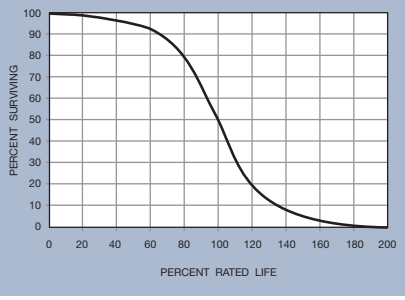

Related Literature

For maximum energy savings consider pairing with the following electronic ballast:

Ballast Technology Applications & Specification Guide (Literature Code: ECS-Electronic2009)

QUICK 60+® System Warranty (Literature Code: ECS140)

Specification Data

Catalog #

Type

Project

Comments

Prepared by

Date

Sample Specification

Lamp(s) shall be an OCTRON® ECOLOGIC® lamp(s) (F017/ECO, F025/ECO, F032/ECO, F040/ECO and F096/ECO) having medium bi-pin bases. Lamp(s) shall be designed to pass the Federal TCLP test in force at the time of manufacture. Lamp(s) shall have a correlated color temperature of (3000K, 3500K, 4100K or 5000K) and a CRI of (80, 82 or 85). The OCTRON lamp(s) shall be operated on dedicated QUICKTRONIC® ballast(s) with complete system warranty from one manufacturer covering lamp(s) and ballast(s).

United States
OSRAM SYLVANIA
100 Endicott Street
Danvers, MA 01923

Trade
Phone: 1-800-255-5042
Fax: 1-800-255-5043

National Accounts
Phone: 1-800-562-4671
Fax: 1-800-562-4674

OEM/Special Markets
Phone: 1-800-762-7191
Fax: 1-800-762-7192

Display/Optic
Phone: 1-888-677-2627
Fax: 1-800-762-7192

Canada
OSRAM SYLVANIA LTD.
2001 Drew Road
Mississauga, ON L5S 1S4

Trade
Phone: 1-800-263-2852
Fax: 1-800-667-6772

OEM/Special Markets/Display/Optic
Phone: 1-800-265-2852
Fax: 1-800-667-6772

www.sylvania.com

© 2010 OSRAM SYLVANIA 11/10 Photography © P.I.Corp

SYLVANIA is a registered trademark of OSRAM SYLVANIA Inc.
SEE THE WORLD IN A NEW LIGHT is a registered trademark of OSRAM SYLVANIA Inc.
OCTRON, ECOLOGIC and QUICK 60+ are registered trademarks of OSRAM SYLVANIA Inc.
QUICKTRONIC is a registered trademark of OSRAM GmbH.

Submitting Agency:	Description: ISS-70-MP-120-2SA-BZ-F-P-LP Project: WWTP IMPVT'S WENATCHEE Notes:	Type:
jcwrightlighting phone: 509-535-0098		A11

McGRAW-EDISON®

DESCRIPTION

The IMPACT Elite Quarter Sphere cutoff wall luminaire makes an ideal complement to site design. Rugged construction and full cutoff classified optics provide facade and security lighting for light restricted zones surrounding schools, office complexes, apartments, and recreational facilities. U.L. and cUL Listed for wet locations in down mount applications and damp locations in up mounted applications.

Catalog #		Type
Project		
Comments		Date
Prepared by		

SPECIFICATION FEATURES

Construction
Two-piece die-cast aluminum housing and removable hinged door frame nests securely for precise tolerance control and repeatability. Hinged door frame inset for clean mating with housing surface and secured via two [2] captive stainless steel fasteners. Optional tamper resistant torx head fasteners [TR] offer vandal resistant access to the electrical compartment. 1/8" clear, heat and impact resistant tempered flat glass lens combined with molded silicone gasket to seal the integrated optical assembly while ensuring peak optical performance.

Electrical
Integral hard mount electrical components are secured and grounded within the die-cast aluminum housing for optimal heat sinking and extended component life. Minimum starting temperatures are -40°C (-40°F) for HPS and -30°C (-22°F) for MP. Compact fluorescent luminaires feature electronic universal 120-277V high efficiency 50/60Hz ballast with -18°C (-0°F) minimum starting temperature. Available in 50-175W HID or 26-84W CF. Emergency power pack available for 26-64W CF.

Optical
Premium anodized 95% reflective aluminum optical assemblies provide high efficiency Type II distribution. Optional silk screened house side flat glass shield provides decreased wall brightness. All Impact Elite Wall Series luminaires classify as IESNA full cutoff in downlight applications.

Mounting
Gasketed and zinc plated rigid steel mounting attachment fits directly to 4" j-box or wall with the Impact Elite "Hook-N-Lock" system for fast installation and mounting in both traditional downlighting [wet location] or inverted uplighting [damp location] mounting positions. Secured via two [2] captive corrosion resistant allen head set screws concealed from view, but accessible from bottom of fixture.

Finish
Housing and door are protected with 5-stage premium TGIC polyester powder coat paint. Premium TGIC powder coat finishes withstand extreme climate changes while providing optimal color and gloss retention over the fixture's installed life. Standard colors include black, bronze, grey, white, dark platinum and graphite metallic. RAL and custom color matches available. Consult McGraw-Edison Architectural Colors Brochure for complete selection.

ISS
IMPACT ELITE QUARTER SPHERE

50 - 175W
Pulse Start Metal Halide
Metal Halide
High Pressure Sodium
26 - 84W
Compact Fluorescent

FULL CUTOFF
WALL MOUNT LUMINAIRE

DARK SKY COMPLIANT FCO Full Cutoff

NOTE: In downlight applications only.

STANDARD DIMENSIONS

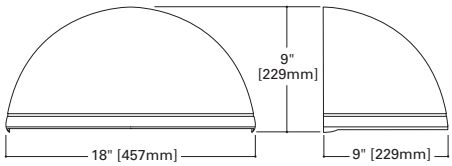

HOOK-N-LOCK MOUNTING

(Mounting attachment included. J-Box not included.)

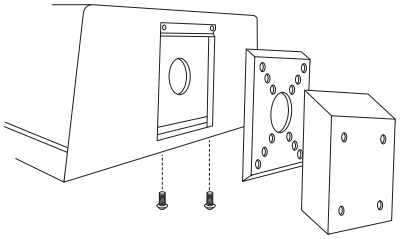

DIMENSIONS WITH BACK BOX

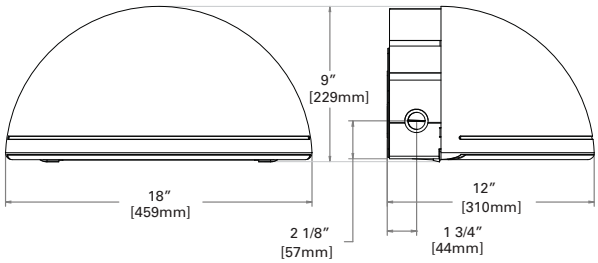

TECHNICAL DATA

UL1598 Listed, CUL Listed
25°C Maximum Ambient Temperature
External Supply Wiring 90°C Minimum
Down Mounted—Wet Location
Up Mounted—Damp Location

ENERGY DATA

High Reactance Ballast Input Watts
50W HPS HPF (66 Watts)
50W MH HPF (72 Watts)
70W HPS HPF (91 Watts)
70W MH HPF (90 Watts)
100W HPS HPF (130 Watts)
100W MH HPF (129 Watts)
150W HPS HPF (190 Watts)
150W MH HPF (185 Watts)

CWA Ballast Input Watts
175W MH HPF (210 Watts)

Electronic Ballast Input Watts
26W CF HPF (29 Watts)
32W CF HPF (36 Watts)
42W CF HPF (46 Watts)
52W CF HPF (55 Watts)

SHIPPING DATA

Approximate Net Weight:
18 lbs. (8 kgs.)

iMPACT™

COOPER Lighting
www.cooperlighting.com

ADH100163 pc
2011-03-24 11:05:45

Submitting Agency:	Description: ISS-70-MP-120-2SA-BZ-F-P-LP Project: WWTP IMPVT'S WENATCHEE Notes:	Type: A11
jcwrightlighting phone: 509-535-0098		

PHOTOMETRICS (Complete IES files available at www.cooperlighting.com)

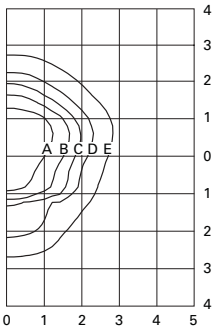

ISS-150-MP-XX-2S
150—Watt MP
14,000—Lumen Clear Lamp

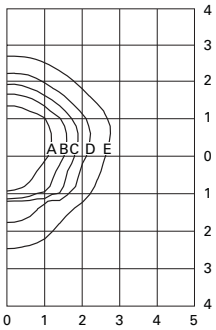

ISS-150-HPS-XX-2S
150—Watt HP
16,000—Lumen Clear Lamp

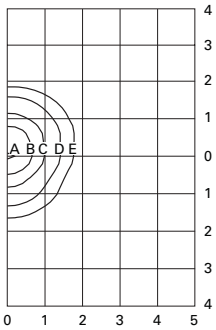

ISS-42-CF-XX-2S
42—Watt CF
3,200—Lumen Lamp

Footcandle Table
Select mounting height and read across for footcandle values of each isofootcandle line. Distance in units of mounting height.

Mounting Height	Footcandle Values for Isofootcandle Lines				
	A	B	C	D	E
150-MP / 150-HPS					
10'	7.20	2.88	1.44	0.72	0.29
12'	**5.00**	**2.00**	**1.00**	**0.50**	**0.20**
14'	3.65	1.46	0.73	0.37	0.07
42-CF					
18'	2.46	1.23	0.62	0.25	0.12
20'	**2.00**	**1.00**	**0.50**	**0.20**	**0.10**
25'	1.28	0.64	0.32	0.13	0.06

ORDERING INFORMATION

Sample Number: ISS-150-MP-120-2S-BZ

ISS	70	MP	120	2S	BZ	F P LP	

Product Family
ISS=Impact Elite Small Quarter Sphere

Lamp Wattage [1]
MP
50=50W [2]
70=70W [2]
100=100W
150=150W
HPS
50=50W [2]
70=70W [2]
100=100W
150=150W
MH
175=175W [1]
CF
26=(1)26W
32=(1) 32W
42=(1) 42W
52=(2) 26W
64=(2) 32W
84=(2) 42W

Lamp Type
MP=Pulse Start Metal Halide
HPS=High Pressure Sodium
MH=Metal Halide [1]
CF=Compact Fluorescent

Voltage [3]
120=120V
208=208V
240=240V
277=277V
347=347V
480=480V
DT=Dual-Tap [4]
MT=Multi-Tap [4]
TT=Triple-Tap [4]
E1=Electronic (120-277V) [5]

Distribution
2S=Type II Segmented

Colors [add as suffix]
AP=Grey
BZ=Bronze
BK=Black
DP=Dark Platinum
GM=Graphite Metallic
WH=White

Options
F=Single Fuse, Specify Voltage (120, 277, or 347V) [6]
FF=Double Fuse, Specify Voltage (208, 240 or 277V) [6]
P=Button Photocontrol (120, 208, 240 or 277V) [6]
L=Lamp Included
TR=Tamper Resistant Fasteners
HS=House Side Shield Glass [5]
PL=Polycarbonate Lens [5, 7]
Q=Quartz Restrike (1) T4 Lamp [8]
EM= Emergency Quartz Restrike (1) T4 Lamp with Time Delay Relay [8]
EM/SC=Emergency Separate Circuit (1) T4 Lamp [8, 9]
QMR=Quartz Restrike (1) MR16 Lamp [8, 10]
EMMR=Emergency Quartz Restrike (1) MR16 Lamp with Time Delay Relay [10, 11]
EM/SC/MR=Emergency Separate Circuit (1) MR16 Lamp [9, 11, 12]
2EM/SC/MR=Emergency Separate Circuit (1) MR16 Lamps [9, 11, 12]
EM/SC/12V=Emergency Separate Circuit 12V Low Voltage (1) MR16 Lamp [9, 13]
EMI40-XXX=Emergency Cold Temperature (UL924 Listed) Power Pack -18°C/0°F, (1) CF Lamp [14]
CFEM-XXX=Emergency CF Power Pack (UL924 Listed) (1) CF Lamp. 0°C/32°F [15]
2EM140-XXX=Emergency Cold Temperature power pack (UL924 listed), -18°C/0°F, (2) CF Lamps with Back Box matching housing finish [14, 16]
2CFEM-XXX=Emergency CF power pack (UL924 listed) 0°C/32°F, (2) CF Lamps, with Back Box matching housing finish [15, 17]

Accessories [18]
MA1256-XX=Thruway back box - Impact Elite Quarter Sphere

Notes:
1 HID lamps are medium base. 175W MH is available for non-U.S. markets only.
2 Not available with 480V.
3 Products also available in non-US voltages and 50HZ for international markets. Consult your Cooper Representative for availabiltiy and ordering information.
4 Dual-tap ballast is 120/277V wired 277V. Multi-tap is 120/208/240/277V wired 277V. Triple-tap ballast is 120/277/347V wired 347V.
5 Available with CF Option only. In cold temperatures, compact fluorescent lamps produce lower illumination levels.
6 Must specify voltage.
7 Down lighting position only.
8 (1) 120V Lamp, 100W maximum quartz lamp. Utility power may need to cycle to allow HID lamp to cool in warm climates. Not available with CF Option. Lamp supplied by others.
9 Leads out of the back of the unit to auxillary power.
10 Not available with CF lamps.
11 (1) or (2) 120V Lamps. GU10 base, 50W maximum each. Lamps supplied by others.
12 Not Available with 52, 64, 84 CF wattages.
13 (1) or (2) 12V bi-pin lamp, socket GU5.3 base, 35W maximum. Power supplied by low voltage DC source (supplied by others). Lamps supplied by others.
14 Specify 120 or 277V, (-18°C) minimum temperature.
15 Specify 120 or 277V, (0°C) minimum temperature.
16 Not available in 84CF configuration.
17 Available in 52CF only.
18 Order separately. Replace "XX" with color designation.

METALARC® PULSE START – E17 & PAR38 Low Wattage

Metal Halide Lamps for Open and Enclosed Fixtures

SYLVANIA METALARC PRO-TECH® and METALARC PULSE START low wattage E17 and PAR38 lamp's premium performance provides opportunities for higher maintained illumination levels and substantial energy savings.

The METALARC PRO-TECH lamp design enhances safety in open or enclosed fixtures and includes a shroud around the arc tube and, in some cases, a thicker walled outer jacket. In addition, METALARC PRO-TECH lamps have a reduction in UV output compared to standard metal halide lamps. The use of open fixtures means more light output over life and lower maintenance costs because there are no lenses to gather dirt and dust, thus extending lamp replacement procedures.

The METALARC enclosed rated E17 lamps provide a solution for enclosed rated fixtures and contain all the benefits of the pulse start technology including reduction in color shift over the life of the lamp, better lumen maintenance and potentially longer life.

Key Features & Benefits

- Full range of wattages from 50 through 175 watts in a medium base
  - 70W, 100W, 150W and 175W lamps available for enclosed rated fixtures
- Universal operating position
- Up to 20,000 hours average rated life
- Available in clear and coated
- PAR38 version available to provide high illuminance levels for featured displays and architectural high-lighting
- METALARC PRO-TECH design – glass shroud for containment and UV-reduction – suitable for use in open or enclosed fixtures
  - NEC 2005 and later revisions require new construction and/or major renovations
    - To use open rated lamps with EX39 sockets in open fixtures, OR
    - Fixtures with a lens
  - Lower maintenance costs
  - Lower initial luminaire cost
  - Reduced luminaire dirt depreciation
  - Dedicated exclusionary medium socket for 50-150 watts with open rated lamps
  - Retrofits into standard sockets

OSRAM SYLVANIA offers the most comprehensive lamp and ballast system solutions. For compatible SYLVANIA ballasts please refer to our Lamp and Ballast Catalog or contact your local SYLVANIA representative.

Product Offering

Wattages	Outer Jacket	Fixture
50, 70, 100, 150	Clear and Coated	Open or Enclosed Rated
70, 100, 150, 175	Clear and Coated	Enclosed Rated Only

Application Information

Applications

- Ambient lighting for industrial and retail
- Flood lighting
- Lobbies, atriums
- Malls
- Parking lots
- Security lighting

Sockets

1. To prevent relamping an open fixture with standard metal halide lamps, a special socket is available with open fixtures for all lamp types.
2. Operating orientation: 50-150W operate in the universal orientation. 175W is for base up only applications.

Fixture

Consult your local fixture agent for available fixtures.

Specification Data

Fixture Description:	Type
Project/Job:	
SYLVANIA lamp:	
SYLVANIA ballast:	
Notes:	

Ordering Information

METALARC PRO-TECH® PULSE START

Item Number	Ordering Abbreviation	Watts	Finish	Bulb	Base	ANSI Code	Average Rated Life (hr.)[1] Vertical	HOR	Initial Lumens	Mean Lumens	Color Temp.	CRI
64587	MP50/U/MED	50	Clear	E17	Med.	M110/O	20,000	10,000	3,450	1,600	3000K	70
64588	MP50/C/U/MED	50	Coated	E17	Med.	M110/O	20,000	10,000	3,200	1,500	2900K	70
64547	MP70/U/MED	70	Clear	E17	Med.	M98/O	15,000	10,000	5,200	3,400	3000K	75
64546	MP70/C/U/MED	70	Coated	E17	Med.	M98/O	15,000	10,000	4,700	3,100	2900K	75
64625	MPD70/U/MED/840	70	Clear	E17	Med.	M98/O	7,500	6,000	5,500	4,000	4200K	80
64621	MPD70/C/U/MED/840	70	Coated	E17	Med.	M98/O	7,500	6,000	5,100	3,800	4000K	82
64417	MP100/U/MED	100	Clear	E17	Med.	M90/O	15,000	10,000	8,500	5,200	3000K	75
64418	MP100/C/U/MED	100	Coated	E17	Med.	M90/O	15,000	10,000	7,900	5,800	2900K	75
64426	MPD100/U/MED/840	100	Clear	E17	Med.	M90/O	7,500	6,000	8,400	5,800	4200K	82
64433	MPD100/C/U/MED/840	100	Coated	E17	Med.	M90/O	7,500	6,000	7,700	5,500	4000K	82
64402	MP150/U/MED	150	Clear	E17	Med.	M102/O	15,000	10,000	12,900	8,000	3000K	75
64406	MP150/C/U/MED	150	Coated	E17	Med.	M102/O	15,000	10,000	11,000	7,500	2900K	73
64403	MPD150/U/MED/840	150	Clear	E17	Med.	M102/O	7,500	6,000	12,500	11,000	4200K	88
64425	MPD150/C/U/MED/840	150	Coated	E17	Med.	M102/O	7,500	6,000	11,000	9,500	4000K	73

METALARC® PULSE START (Rated for enclosed fixtures)

Item Number	Ordering Abbreviation	Watts	Finish	Bulb	Base	ANSI Code	Average Rated Life (hr.)[1] Vertical	Initial Lumens	Mean Lumens	Color Temp.	CRI
64836	M70/U/MED	70	Clear	E17	Med.	M98/E	12,000	5,600	3,300	4000K	65
64891	M70/C/U/MED	70	Coated	E17	Med.	M98/E	12,000	5,400	3,000	3800K	65
64818	M100/U/MED	100	Clear	E17	Med.	M90/E	12,000	8,500	4,675	4000K	65
64894	M100/C/U/MED	100	Coated	E17	Med.	M90/E	12,000	8,000	4,400	3650K	68
64785	M150/U/MED	150	Clear	E17	Med.	M102/E	12,000	14,000	11,000	4300K	65
64892	M150/C/U/MED	150	Coated	E17	Med.	M102/E	12,000	12,750	9,300	4000K	70
64171	MS175/PS/BU-ONLY/MED	175	Clear	E17	Med.	M137/E, M152/E	15,000	17,500	12,800	4000K	65
64170	MS175/C/PS/BU-ONLY/MED	175	Coated	E17	Med.	M137/E, M152/E	15,000	16,600	12,500	3700K	70

METALARC PRO-TECH PULSE START PAR38/ECO®

Item Number	Ordering Abbreviation	Watts	ANSI Code	Beam Angle/ CBCP	Initial Lumens	Average Rated Life (hr.)	Color Temp.	CRI[4]
64590	MP70PAR38/U/SP20/ECO[5,6]	70	M98/O	20°/18,000	3,400	8,500	3200K	75
64592	MP70PAR38/U/FL35/ECO[5,6]	70	M98/O	35°/10,000	3,400	8,500	3200K	75
64594	MP70PAR38/U/VWFL65/ECO[5,6]	70	M98/O	65°/3000	3,400	8,500	3200K	75
64580	MP100PAR38/U/SP20/ECO[5,6]	100	M90/O	20°/26,000	5,800	8,500	3000K	75
64582	MP100PAR38/U/FL35/ECO[5,6]	100	M90/O	35°/12,000	5,800	8,500	3000K	75
64584	MP100PAR38/U/VWFL65/ECO[5,6]	100	M90/O	65°/4500	5,800	8,500	3000K	75
64593	MP150PAR38/U/SP20/ECO[5,6]	150	M102/O	20°/34,000	8,800	8,500	3200K	75
64597	MP150PAR38/U/FL35/ECO[5,6]	150	M102/O	35°/17,000	8,800	8,500	3200K	75
64599	MP150PAR38/U/VWFL65/ECO[5,6]	150	M102/O	65°/7500	8,800	8,500	3200K	75

Notes:
1. Average rated life based on 10 hours per start operating on an ANSI ballast.
2. All 50, 70, 100, 150 and 175 watt lamps must be operated in a 4000V pulse rated socket.
3. TCLP claims based on OSRAM SYLVANIA's TCLP test protocol. Some states and localities have lower limits than the Federal TCLP standard and have different disposal regulations for mercury containing lamps.
4. For higher CRI, use SYLVANIA METALARC POWERBALL® CERAMIC lamps.
5. All PAR38 lamps listed above have an E26 medium skirt base. Note this base is not compatible with exclusionary medium sockets.
6. See Beam Spread Design Guide for footcandle diagrams.

O = Lamps classified as O-type comply with ANSI Standard C78.389 for containment testing and may be used in open luminaires. See lamp warning.
E = Lamps classified as E-type are to be used only in suitably rated enclosed luminaires.

Ordering Guide

E17

MP	**50**	**/**	**—**	**/**	**U**	**/**	**MED**
MP=METALARC PRO-TECH® For Open and Enclosed Fixture M=METALARC® MS=METALARC Super For Enclosed Fixture Only	Wattage: 50, 70, 100, 150, 175		Finish _ = Clear C = Coated		Operating Position: U = Universal BU-ONLY = Base Up Only		Base: MED = Medium

PAR38

MP	**70**	**PAR38**	**/**	**U**	**/**	**SP**	**20**	**/**	**ECO**
MP=METALARC PRO-TECH Open and Enclosed Fixture	Wattage: 70, 100, 150	Bulb Shape PAR38		Operating Position: U = Universal		Beam Spread SP = Spot FL = Flood VWFL = Very Wide Flood	Beam Angle 20 = 20° 35 = 35° 65 = 65°		ECOLOGIC®

Technical Information

Typical Lumen Maintenance Curve

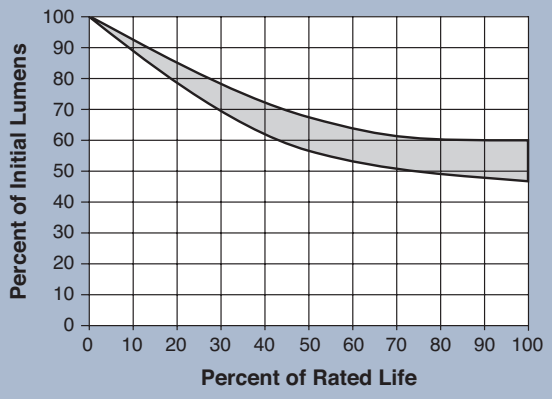

Typical Survival Curve

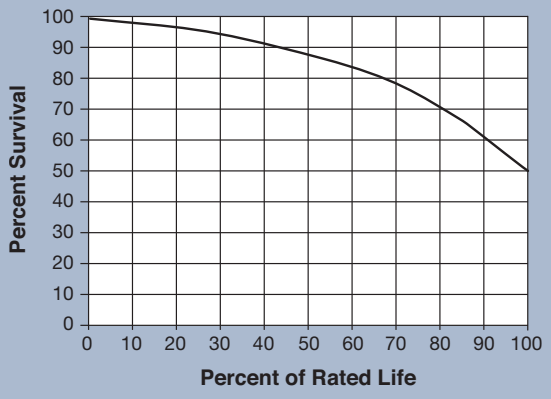

Lamp Dimensions

E17

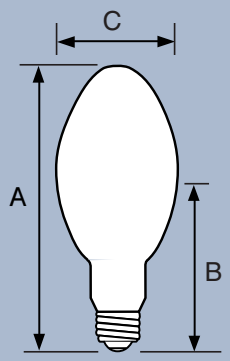

PAR38

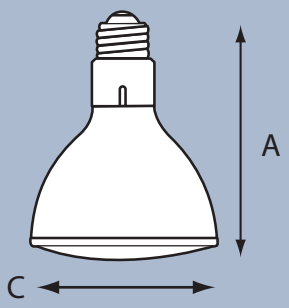

Bulb Shape	(A) MOL	(B) LCL	(C) Diameter
E17	5.4" (137.2mm)	3.4" (86.4mm)	2.1" (53.3mm)
PAR38	5.3" (134.6mm)	N/A	4.75" (120.7mm)

Expanded Line of SYLVANIA METALARC PRO-TECH and PULSE START lamps

In addition to the line of METALARC PRO-TECH lamps listed, OSRAM SYLVANIA offers a line of METALARC POWERBALL® CERAMIC, METALARC PULSE START and METALARC SUPERSAVER® lamps for use in open and or enclosed rated fixtures. Please visit SYLVANIA.com for more information and download a copy of the latest Product Information Bulletin.

Exclusionary Socket for METALARC PRO-TECH® Lamps

Medium Based Dedicated Socket Comparison

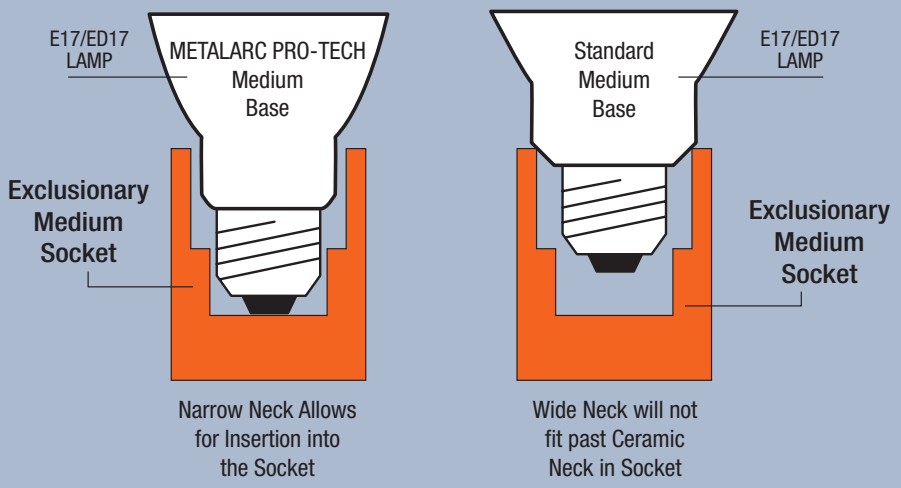

National Electric Code 2005 and later revision require new construction and/or major renovations to use exclusionary sockets in open fixtures, or fixture with a lens.

WARNING: This lamp can cause serious skin burn and eye inflammation from shortwave Ultraviolet radiation if the outer envelope of the lamp is broken or punctured. Do not use where people will remain for more than a few minutes unless adequate shielding or other safety precautions are used. Lamps that will automatically extinguish when the outer envelope is broken or punctured are commercially available.

Sample Specification

METALARC PRO-TECH PULSE START
Lamp(s) shall be (a) METALARC PRO-TECH PULSE START Lamp(s) constructed with an arc tube shroud and shall be designed for open fixture operation and reduced UV output.

METALARC® PULSE START
Lamp(s) shall be (a) 150W METALARC PULSE START lamp(s) exhibiting initial lumens of 14,000 with a 60% mean lumen maintenance and capable of operating on a M102/E ballast. Lamp construction shall include a lead-free welded base.

METALARC PRO-TECH PULSE START PAR38/ECO®
Lamp(s) shall be (a) METALARC PRO-TECH PULSE START PAR38/ECO lamp(s) for use in open or enclosed luminaires with an 8,500-hour average rated life. Lamp(s) shall exhibit a correlated color temperature of 3200K, a maximum color shift of ±200K over life, and a CRI of 75. Lamp(s) shall pass the existing Federal TCLP limits.

United States
OSRAM SYLVANIA
100 Endicott Street
Danvers, MA 01923

Trade
Phone: 1-800-255-5042
Fax: 1-800-255-5043

National Accounts
Phone: 1-800-562-4671
Fax: 1-800-562-4674

OEM/Special Markets
Phone: 1-800-762-7191
Fax: 1-800-762-7192

Display/Optic
Phone: 1-888-677-2627
Fax: 1-800-762-7192

Canada
OSRAM SYLVANIA LTD.
2001 Drew Road
Mississauga, ON L5S 1S4

Trade
Phone: 1-800-263-2852
Fax: 1-800-667-6772

OEM/Special Markets/Display/Optic
Phone: 1-800-265-2852
Fax: 1-800-667-6772

www.sylvania.com

© 2011 OSRAM SYLVANIA 5/11 Photography © P.I.Corp

SYLVANIA, ECO, ECOLOGIC, METALARC, METALARC PRO-TECH and SUPERSAVER are registered trademarks of OSRAM SYLVANIA Inc.
SEE THE WORLD IN A NEW LIGHT is a registered trademark of OSRAM SYLVANIA Inc.
POWERBALL is a registered trademark of OSRAM GmbH.

Submitting Agency:	Description: GUTH - ACS77-82-120-EB/MB90-HL Project: WWTP IMPVT'S WENATCHEE Notes:	Type:
jcwrightlighting phone: 509-535-0098		B

PLASCOLUME

Stainless Steel Fluorescent for Hazardous and Wet Applications

FEATURES
- High lumen package
- Stainless steel
- Prismatic DR acrylic lens
- 4 or 8 foot
- Hazardous or wet locations
- Low pressure hosedown

BENEFITS
- Corrosion resistant
- Excellent brightness control
- Resists abuse
- Requires less fixtures
- Toolless entry

APPLICATIONS
- Food processing
- Car wash
- Petrochemical plants
- Wastewater treatment
- Paper mills

Specifications/Features

GENERAL
- Remains leak-free when subjected to low pressure water washdown.
- Corrosion resistant stainless steel fixture.
- Fixture is listed to be installed in the 0° Nadir configuration, lens down.

CONSTRUCTION
- Housing formed entirely of 22 ga. 304 stainless with a mill (2B) finish.
- End caps riveted and silicone sealed to channel.
- Closed stainless steel rivets used exclusively to prevent leaks.
- Ballast mounted with weld studs to eliminate unnecessary penetrations of the housing.
- Supplied with 1/2" cast aluminum hubs. Optionall 3/4" and SS.

DOOR FRAME/LENS
- Lens extruded of 100% DR Virgin Acrylic with embossed prisms for brightness control.
- Lens is sealed against the housing with an extruded PVC gasket held in place with 304 Stainless C-channel which distributes the force of the clamps uniformly over the gasket.
- The lens frame is clamped to the body with six (ten on 8' housings) stainless "no tool" cam latches mounted to the housing with stainless closed rivets.
- Vandal resistant version uses polycarbonate lens.

One piece molded PVC gasket compression fit designed into 304 Stainless steel lens frame.

Stainless steel swivel latches secure lens and provide easy "toolless" access.

LISTINGS
- Listed "Wet Location, Covered Ceilings Only" with the HL version fixture listed "Hazardous Locations." Class I, Division 2, Groups A,B,C,D; Class II, Division 2, Group G; and Class III. Temperature code is T3C (40°C Ambient).
- Listed for use in Canada.

ELECTRICAL
- The 430MA ballast is energy saving Class P and appropriate to the lamp and voltage specified.
- In the 800MA versions the ballast is mounted to the body with aluminum heat radiators to prolong ballast life, and permit mounting.
- All fixtures carry the IBEW Union label to ensure quality.

Submitting Agency:	Description: GUTH - ACS77-82-120-EB/MB90-HL Project: WWTP IMPVT'S WENATCHEE Notes:	Type:
jcwrightlighting phone: 509-535-0098		B

Photometrics

Coefficients of Utilization
Acrylic 2 Lamp, 40W Fluorescent ACS7762/120/HL

Ceiling Refl.	80%			50%			10%		
Wall Refl.	50	30	10	50	30	10	50	30	10
RCR	20% Effective Floor Cavity Reflectance								
1	.69	.66	.63	.63	.60	.58	.55	.54	.52
2	.61	.56	.53	.55	.52	.49	.49	.47	.45
3	.54	.49	.45	.50	.46	.43	.44	.42	.39
4	.48	.43	.39	.44	.40	.37	.40	.37	.34
5	.43	.38	.33	.40	.35	.32	.36	.32	.30
6	.39	.33	.29	.36	.32	.28	.33	.29	.26
7	.35	.30	.26	.33	.28	.24	.30	.26	.23
8	.32	.26	.22	.29	.25	.21	.27	.23	.20
9	.29	.23	.20	.27	.22	.19	.24	.21	.18
10	.25	.20	.16	.24	.19	.16	.21	.17	.15

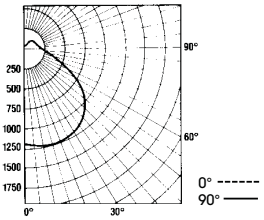

S/MH Ratio 1.3:1
Total Lamp Lumens 6,300
Fixture Efficiency 68%

Report No.
P10568A

Coefficients of Utilization
Vandal Proof 2 Lamp, 40W Fluorescent VPS6762/120/EG

Ceiling Refl.	80%			50%			10%		
Wall Refl.	50	30	10	50	30	10	50	30	10
RCR	20% Effective Floor Cavity Reflectance								
1	.63	.60	.57	.56	.54	.52	.49	.48	.46
2	.54	.49	.45	.48	.45	.42	.42	.40	.38
3	.47	.41	.37	.42	.38	.34	.37	.34	.31
4	.41	.35	.30	.37	.32	.29	.33	.29	.26
5	.37	.30	.26	.33	.28	.24	.29	.26	.23
6	.33	.27	.22	.30	.25	.21	.27	.23	.20
7	.30	.24	.19	.27	.22	.18	.24	.20	.17
8	.27	.21	.17	.25	.20	.16	.22	.18	.15
9	.25	.19	.15	.23	.18	.14	.20	.17	.14
10	.23	.17	.14	.21	.16	.13	.19	.15	.12

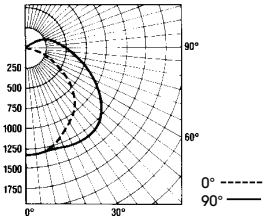

S/MH Ratio 1.4:1
Total Lamp Lumens 6,300
Fixture Efficiency 65%

Report No.
P10663

Dimensions

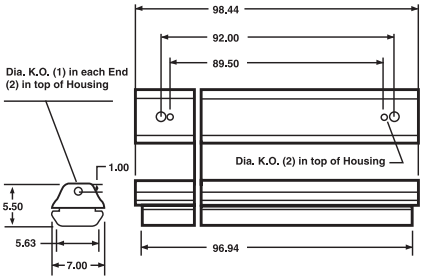

QUICK CHAIN MOUNTING "/QCH"

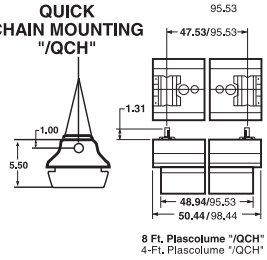

ADJUSTABLE MOUNTING BRACKETS "/AMB"

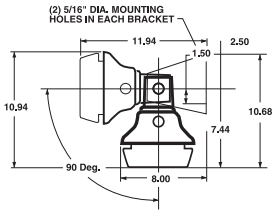

Plascolume Catalog Numbers

ACS77 - 82 - 120 - EB

VOLTAGE
120
277

TYPE
ACS77 - Hazardous Location
ACS67 - Wet Location
VPS67* - Vandal Proof/Wet Location

LAMPS/SIZE

4 FOOT
60 - 1-F40 T12
62 - 2-F40 T12
64 - 1-F48 T12/HO
65 - 2-F48 T12/HO
80 - 1-F32 T8
82 - 2-F32 T8

8 FOOT
63 - 4-F40 T12
66 - 1-F96 T12/HO
67 - 2-F96 T12/HO
83 - 4-F32 T8
86 - 1-F96 T8/HO
87 - 2-F96 T8/HO
88 - 1-F96 T8
89 - 2-F96 T8

* 4' only.

PIPE MOUNTING "/PI"

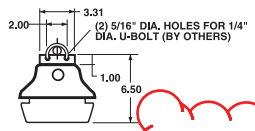

CHAIN MOUNTING BRACKETS "/CH"

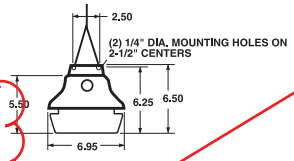

WALLMOUNT "/MB90"

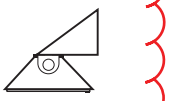

Options

"/FF" - Fast Acting Fixture Fuse, Buss GLR
"/SFF" - Slow Blow (Fusetron) Fuse, Buss GMF
"/0°" - 0° operation on 430MA ballast
"/ES" - Energy Saving Ballast on 800MA Unit (8' unit only)
"/EB" - For Electronic Ballast
"/CH" - Stainless Steel Chain Mounting Brackets (one pair)
"/AMB" - Stainless Steel Adjustable Mounting Brackets (one pair)*
"/PI" - Pipe Mounting (PIPE NOT SUPPLIED)
"/SH" - 3/4" Stainless Steel Hub
"/AH" -3/4" Cast Aluminum Hub
"/QCH" - Stainless Steel Quick Chain Mounting
"/MB90" - Wall Mount

*HAZARDOUS LOCATIONS FIXTURE APPROVED FOR CONDUIT, CHAIN BRACKET PIPE AND WALL MOUNTING ONLY.

Guth utilized the services of U.L. and ETL for listing products.
Specifications and data are subject to change without notice.

OCTRON® 800 ECOLOGIC®

Fluorescent Lamps

OCTRON 800 ECOLOGIC T8 lamps offer a high quality solution for general purpose fluorescent lighting applications where color is important. These lamps are available in a wide range of color temperatures: 3000K, 3500K, 4100K and 5000K that feature improved color rendering and lumen maintenance when compared to 700 series lamps. When paired with QUICKTRONIC electronic ballasts, these systems are a good alternative to T12 fluorescent systems and are covered by the comprehensive QUICK 60+ system warranty.

Key Features & Benefits

- Passes Federal TCLP test*
- Energy efficient T8 lamp
- Made in the USA
- Lead free
- RoHS compliant
- Compatible with QUICKTRONIC® electronic ballasts
- QUICK 60+® System Warranty

ECOLOGIC® is a comprehensive program of OSRAM SYLVANIA focused on addressing environmental issues at all stages of lamp life.

* Regulations may vary. Check your local and state regulations.

RoHS compliant
This light source meets restrictions on hazardous substances.

MADE IN USA

LEAD-FREE

ECOLOGIC®

Product Offering

Ordering Abbreviation	Wattage	Lumens	CRI
F017/800/ECO	17	1350	82
F025/800/ECO	25	2150	82
F032/800/ECO	32	2950	85
F040/800/ECO	40	3650	82
F096/800/ECO	96	5900	82

Application Information

Applications

- Cove
- Recessed troffer
- Strip light fixture
- Valance

Application Notes

1. Lamps starting down to -20°F (dependent on ballast)
2. Operation below 50°F may affect lumen output or lamp operation.
3. For cold temperature applications, use in enclosed fixture or use tube to maximize lamp performance.
4. For rapid start operation, check with ballast manufacturer for ground plane requirement.
5. For maximum energy savings, operate on electronic instant start ballast.

Ordering Information

Item Number	Ordering Abbreviation	Nominal Length	Initial Lumens	Mean Lumens[1]	Rated Life: Instant Start 3 hrs/ start	Rated Life: Instant Start 12 hrs/ start	Rated Life: Programmed Rapid Start 3 hrs/ start	Rated Life: Programmed Rapid Start 12 hrs/ start	CCT	CRI
22135	F017/830/ECO	24	1,350	1,269	24,000	28,000	30,000	36,000	3000K	82
22136	F017/835/ECO	24	1,350	1,269	24,000	28,000	30,000	36,000	3500K	82
22137	F017/841/ECO	24	1,350	1,269	24,000	28,000	30,000	36,000	4100K	82
22138	F025/830/ECO	36	2,150	2,021	24,000	28,000	30,000	36,000	3000K	82
22139	F025/835/ECO	36	2,150	2,021	24,000	28,000	30,000	36,000	3500K	82
22140	F025/841/ECO	36	2,150	2,021	24,000	28,000	30,000	36,000	4100K	82
21777	F032/830/ECO	48	2,950	2,773	24,000	28,000	30,000	36,000	3000K	85
21779	F032/835/ECO	48	2,950	2,773	24,000	28,000	30,000	36,000	3500K	85
21781	F032/841/ECO	48	2,950	2,773	24,000	28,000	30,000	36,000	4100K	85
22143	F032/850/ECO	48	2,950	2,773	24,000	28,000	30,000	36,000	5000K	80
22144	F040/830/ECO	60	3,650	3,431	24,000	28,000	30,000	36,000	3000K	82
22145	F040/835/ECO	60	3,650	3,431	24,000	28,000	30,000	36,000	3500K	82
22146	F040/841/ECO	60	3,650	3,431	24,000	28,000	30,000	36,000	4100K	82
22147	F096/830/ECO	96	5,900	5,428	18,000	24,000			3000K	82
22148	F096/835/ECO	96	5,900	5,428	18,000	24,000			3500K	82
22149	F096/841/ECO	96	5,900	5,428	18,000	24,000			4100K	82
22173	F096/850/ECO	96	5,900	5,428	18,000	24,000			5000K	82

1. Mean lumens measured at 40% of rated life.

Ordering Guide

F0	32	/	8	35	/	ECO
Fluorescent OCTRON	Wattage: 17, 25, 32, 40 or 96 watts		8 = 80–85 CRI	30 = 3000K CCT 35 = 3500K CCT 41 = 4100K CCT 50 = 5000K CCT		ECOLOGIC

Technical Information

Typical Fluorescent Lamp Mortality

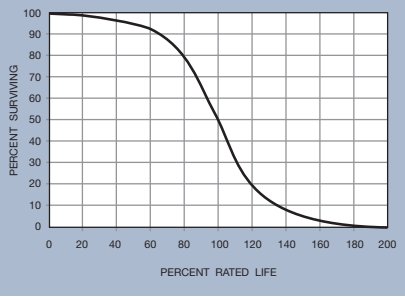

Related Literature

For maximum energy savings consider pairing with the following electronic ballast:

Ballast Technology Applications & Specification Guide (Literature Code: ECS-Electronic2009)

QUICK 60+® System Warranty (Literature Code: ECS140)

Specification Data

Catalog #

Type

Project

Comments

Prepared by

Date

Sample Specification

Lamp(s) shall be an OCTRON® ECOLOGIC® lamp(s) (F017/ECO, F025/ECO, F032/ECO, F040/ECO and F096/ECO) having medium bi-pin bases. Lamp(s) shall be designed to pass the Federal TCLP test in force at the time of manufacture. Lamp(s) shall have a correlated color temperature of (3000K, 3500K, 4100K or 5000K) and a CRI of (80, 82 or 85). The OCTRON lamp(s) shall be operated on dedicated QUICKTRONIC® ballast(s) with complete system warranty from one manufacturer covering lamp(s) and ballast(s).

United States
OSRAM SYLVANIA
100 Endicott Street
Danvers, MA 01923

Trade
Phone: 1-800-255-5042
Fax: 1-800-255-5043

National Accounts
Phone: 1-800-562-4671
Fax: 1-800-562-4674

OEM/Special Markets
Phone: 1-800-762-7191
Fax: 1-800-762-7192

Display/Optic
Phone: 1-888-677-2627
Fax: 1-800-762-7192

Canada
OSRAM SYLVANIA LTD.
2001 Drew Road
Mississauga, ON L5S 1S4

Trade
Phone: 1-800-263-2852
Fax: 1-800-667-6772

OEM/Special Markets/Display/Optic
Phone: 1-800-265-2852
Fax: 1-800-667-6772

www.sylvania.com

© 2010 OSRAM SYLVANIA 11/10 Photography © P.I.Corp

SYLVANIA is a registered trademark of OSRAM SYLVANIA Inc.
SEE THE WORLD IN A NEW LIGHT is a registered trademark of OSRAM SYLVANIA Inc.
OCTRON, ECOLOGIC and QUICK 60+ are registered trademarks of OSRAM SYLVANIA Inc.
QUICKTRONIC is a registered trademark of OSRAM GmbH.

Submitting Agency:	Description: LHZ618 S 1 G SDA H0806 CC Project: WWTP IMPVT'S WENATCHEE Notes:	Type: C
jcwrightlighting phone: 509-535-0098		

LITHONIA LIGHTING®

Catalog Number	
Notes	
Type	

FEATURES & SPECIFICATIONS

CONSTRUCTION

Impact-resistant, fiberglass reinforced polyester housing. Gray with stainless steel hardware and clear polycarbonate cover. Includes one-piece formed gasket and corrosion-resistant hardware. Standard internal or external mounting feet provide installation flexibility.

Housing suitable for Class I, Division 2, Groups A, B, C and D; Zone 2, Groups IIA, IIB + H_2 and IIC; and Class II, Division 2, Groups F and G.

Lamp heads are Class I, Div. 2 rated polycarbonate sealed beam PAR36 tungsten or halogen lamps.

Optional shatter-resistant shield is designed for use in food service areas.

ELECTRICAL

120/277 VAC dual-voltage input with surge-protected, solid-state charging circuitry.

Low-voltage disconnect (LVD) feature disconnects battery prior to unacceptable deep discharge but not before required 90-minute emergency operation.

AC lockout feature prevents battery drain prior to energizing of utility power. Wiring and electrical connections can be completed without energizing emergency circuit.

Brownout protection circuitry automatically switches unit into emergency mode if utility voltage drops below 25% of nominal.

Battery charging circuitry is solid-state. Utilizes fully automatic, voltage-regulated charger. Battery recharge time after full discharge less than required by UL 924 standard.

Battery: Sealed, maintenance-free lead-calcium battery standard. Quick-connect plug assembly for easy installation and maintenance.

90-minute emergency operation at full light output.

Diagnostics: Self-diagnostic option conducts automatic and manual tests, indicating real-time status of lamp, battery and charger via tri-color indicator lamps. Automatic tests include systems analysis every 10 seconds, with actual load tests performed for one-minute duration every 30 days, and for 30-minute duration on the sixth and twelfth month. Manual tests include one-minute or 90-minute battery discharge and lamp illumination tests.

LISTINGS

UL Listed. Meets UL 924 and 844 illumination standards. UL listed for use in Class I and II, Division 2 hazardous location areas. NFPA 101, NEC, OSHA and IBC illumination standards.

WARRANTY

Three-year warranty.

Note: Specifications subject to change without notice.

Class I and II, Division 2 Emergency Lighting

LHZ

Hazardous Location

Combination Emergency LED Exit/Unit

ORDERING INFORMATION Lead times will vary depending on options selected. Consult with your sales representative.

Example: LHZ618 S 1 R H0806 SD

LHZ618	S		1	G			H0806	SDA
Family	**Face type**	**Housing color**	**Number of faces**	**LED color**	**Input voltage**	**Lamp heads**	**Lamp type**	**Options**
LHZ618 6V, 18W lead-calcium battery	S Stencil	(blank) Gray	1 Single	R Red	(blank) 120/277 Dual voltage	(blank) 2 heads	PAR36 sealed beam	SD Self-diagnostics
LHZ636 6V, 36W lead-calcium battery				G Green		R1 1 head	N0806 8W/6V incand.	SDA Self-diagnostics with audible alarm
LHZ672 6V, 72W lead-calcium battery						R0 No heads	N1806 18W/6V incand.	TD Time delay[1]
							N2506 25W/6V incand.	SRS Shatter-resistant lamp head shield
							H0606 6W/6V halogen	
							H0806 8W/6V halogen	
							H1206 12W/6V halogen	

Notes

1 Not available with R0 (no heads).

Submitting Agency:	Description: LHZ618 S 1 G SDA H0806 CC Project: WWTP IMPVT'S WENATCHEE Notes:	Type: C
jcwrightlighting phone: 509-535-0098		

LHZ Hazardous Location Combination Emergency LED Exit/Unit

SPECIFICATIONS

ELECTRICAL

Primary Circuit

	AC volts	Input
LHZ618	120	.133
Red/Green	277	.058
LHZ636	120	.122
Red/Green	277	.053
LHZ672	120	.129
Red/Green	277	.56

BATTERY

Lead-Calcium

Voltage	Shelf Life[1]	Expected Life[1]	Maintenance[2]	Optimum Temperature[3]
6	12 months	5-7 years	none	65°F - 85°F (19°C - 30°C)

Notes

1 At 77°F (25°C).

2 All life safety equipment, including emergency lighting for path of egress must be maintained, serviced, and tested in accordance with all National Fire Protection Association (NFPA) and local codes. Failure to perform the required maintenance, service, or testing could jeopardize the safety of occupants and will void all warranties.

3 Optimum ambient temperature range where unit will provide capacity for 30 to 90 minutes. Higher and lower temperatures affect life and capacity. Consult factory for detailed information.

DIMENSIONS

All dimensions are in inches (centimeters).

Shipping weight: LHZ618 - 24 lbs. (11 kgs.)
LHZ636 - 25 lbs. (11 kgs.)
LHZ672 - 27 lbs. (12 kgs.)

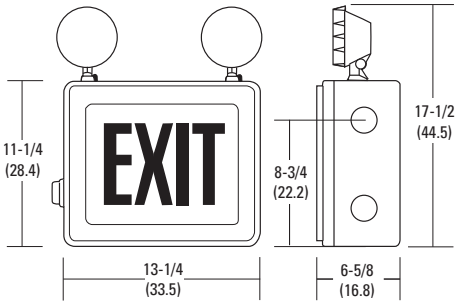

Mounting Tabs: Mounting enclosure to wall using (4) thru holes or optional mounting feet.

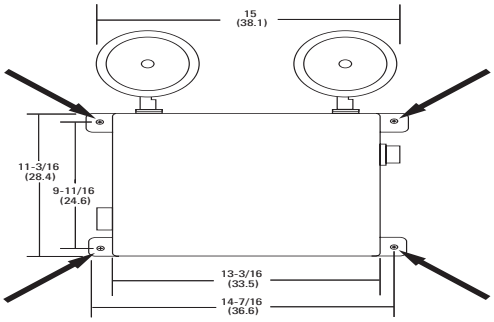

LITHONIA LIGHTING®
An AcuityBrands Company

EMERGENCY: One Lithonia Way Conyers, GA 30012 Phone: 800-334-8694 Fax: 770-981-8141 www.lithonia.com

© 1996-2011 Acuity Brands Lighting, Inc. All rights reserved. Rev. 08/26/11

Submitting Agency:	Description: N2LPS12222 Project: WWTP IMPVT'S WENATCHEE Notes: CROUSE HINDS	Type:
jcwrightlighting phone: 509-535-0098		D

2L LED N2LPS LIGHT-PAK™ Emergency Lighting System

Cl. I, Div. 2, Groups B, C, D
Cl. I, Zone 2
Wet Locations, Marine
NEMA 3, 3R, 4X
Ambient 0ºC to 55ºC

Applications:

LED N2LPS Light-Pak™ emergency lighting systems are used:

- To provide reliable illumination for egress areas during failure or interruption of power to the normal lighting system
- In areas where flammable gases or vapors may become present due to abnormal, unusual, or accidental conditions
- In manufacturing plants, refineries, petrochemical and chemical plants, waste and sewage treatment facilities, oil terminals, food processing facilities, breweries, and other industrial manufacturing or process industry facilities subject to wet or corrosive conditions
- To illuminate machinery or panels during a loss of AC power
- Where moisture, dirt, dust, or corrosion will limit the life and reliability of ordinary emergency lighting systems
- Where required by the National Electrical Code®, the Life Safety Code® or other applicable codes
- Outdoor applications

Features:

- Compact, factory-assembled luminaire featuring LED lamps for improved lumen performance, on-time, and lamp life
- Nonmetallic, enclosed, and gasketed housing provides corrosion protection in the most extreme environments
- Durable and marine rated LED lamp head assemblies provide protection against water ingress, corrosion, and impact
- High temperature rated nickel cadmium battery for reliable operation up to 55ºC ambient
- Solid state battery charger for long life and reliable battery operation prevents deep discharge by automatically disconnecting the battery from the luminaire
- Factory-installed "push-to-test" button
- Self-test, monitoring, and diagnostics reduce costly maintenance checks
- Remote luminaire head assemblies (one or two) are available for mounting of luminaire heads away from main power system
- Stainless steel drain minimizes moisture collection
- Standard battery disconnect switch (Krydon® unit)

Certifications and Compliances:

NEC/CEC:

- Class I, Division 2, Groups B, C, D, Zone 2

UL Standards:

- 1598A (Supplemental Requirements for Luminaires for Installation on Marine Vessels)
- 924 (Emergency Lighting and Power Equipment)
- 844 (Electric Luminaires Hazardous Locations)

CSA Standards:

- C22.2 No. 141-M1985 unit equipment for emergency lighting
- C22.2 No. 137-M1981 non-incendive electrical equipment for use in Class I, Division 2 hazardous locations
- Life Safety Code NFPA101® – Section 5-9 (Emergency Lighting)
- Marine wet locations suitability, Type 4X

Standard Materials:

- Power supply and remote luminaire enclosures – Krydon® fiberglass-reinforced polyester
- LED lamp head assembly – epoxy powder coated stainless steel
- Exterior hardware – nylon, plastic coated, and stainless steel
- Cover gasket – Hypalon® synthetic rubber

Temperature Performance Data:

Based on 55°C ambient

Cat. #	Class I, Division 2
N2LPS (all)	40°C - T5; 55°C - T4A
N2RF (all)	T5

Note: Ambient temperature at which the Light-Pak system is rated is 0°C to 55°C. Operation at temperatures outside this range will affect the battery life and/or charging performance.

National Electrical Code and Life Safety Code are registered trademarks of the National Fire Protection Association, Inc.
Noryl is a registered trademark of General Electric Company.

Electrical Ratings:

- Power supply –
  Input: 120, 220, 230, 240, or 277 VAC, 50 or 60 Hz; 28 watts max.
  Output: 12 VDC
- Luminaire heads –
  Voltage: 12 VDC; Lamp: 3 watt LED
  Total lumen output: 80

Unit Net Weights:

- N2LPS12222 – 16 lbs.
- N2LPS12220 – 12 lbs.
- N2RF1221 – 8 lbs.
- N2RF1222 – 9 lbs.

2L

 Copyright© 2011 Cooper Crouse-Hinds

Submitting Agency:	Description: N2LPS12222 Project: WWTP IMPVT'S WENATCHEE Notes: CROUSE HINDS	Type: D
jcwrightlighting phone: 509-535-0098		

LED N2LPS LIGHT-PAK™ Emergency Lighting System

Cl. I, Div. 2, Groups B, C, D
Cl. I, Zone 2
Wet Locations, Marine
NEMA 3, 3R, 4X
Ambient 0ºC to 55ºC

2L

Ordering Information:

Description	Cat. #
28 watt, 12 volt power supply assembly with two 3 watt LED lamp heads	**N2LPS12222**
28 watt, 12 volt stainless steel power supply assembly with two 3 watt LED lamp heads	**N2LPS12222 SS**
28 watt, 12 volt power supply assembly less luminaire heads	**N2LPS12220***
Remote luminaire assembly with one 3 watt LED lamp head	**N2RF1221***
Remote luminaire assembly with two 3 watt LED lamp heads	**N2RF1222***
28 watt, 120V LED Light-Pak with single sided exit sign**	**N2LPS12222/120 EXS DR0391734**
28 watt, 277V LED Light-Pak with single sided exit sign**	**N2LPS12222/277 EXS DR0391734**
28 watt, 120V LED Light-Pak with double sided exit sign**	**N2LPS12222/120 EXD DR0391734**
28 watt, 277V LED Light-Pak with double sided exit sign**	**N2LPS12222/277 EXD DR0391734**

*Not cUL approved. UL Listed only.
**Exit sign operates in both normal and emergency mode.

Note: Up to four (4) remote LED lamp assemblies can be connected to the N2LPS12222. Up to six (6) remote LED lamp assemblies can be connected to the N2LPS12220.

Wire Sizing for Remote Installation:

For Copper Wire –

Running Distance† (ft.) Between Power Supply and Remote Luminaire

	Load In Watts					Load In Watts			
Wire Size	**8**	**16**	**24**	**32**	**Wire Size**	**8**	**16**	**24**	**32**
16 AWG	26	13	6	3	10 AWG	106	53	26	13
14 AWG	42	21	10	5	8 AWG	168	84	42	21
12 AWG	66	33	16	8	6 AWG	270	135	67	33

†Maximum distance to limit line voltage drop to 5%.

Dimensions (N2LPS):

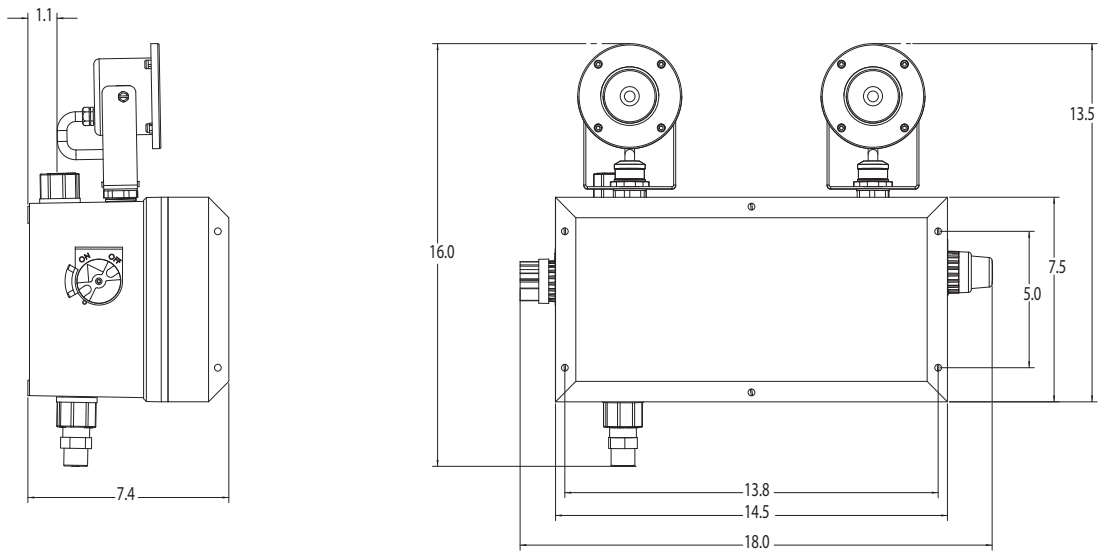

Standard – N2LPS LED Light-Pak™

2L

 Copyright© 2011 Cooper Crouse-Hinds

Submitting Agency:	Description: N2LPS12222	Type:
jcwrightlighting phone: 509-535-0098	Project: WWTP IMPVT'S WENATCHEE Notes: CROUSE HINDS	D

2L LED N2LPS LIGHT-PAK™ Emergency Lighting System

Cl. I, Div. 2, Groups B, C, D
Cl. I, Zone 2
Wet Locations, Marine
NEMA 3, 3R, 4X
Ambient 0ºC to 55ºC

Dimensions (N2LPS):

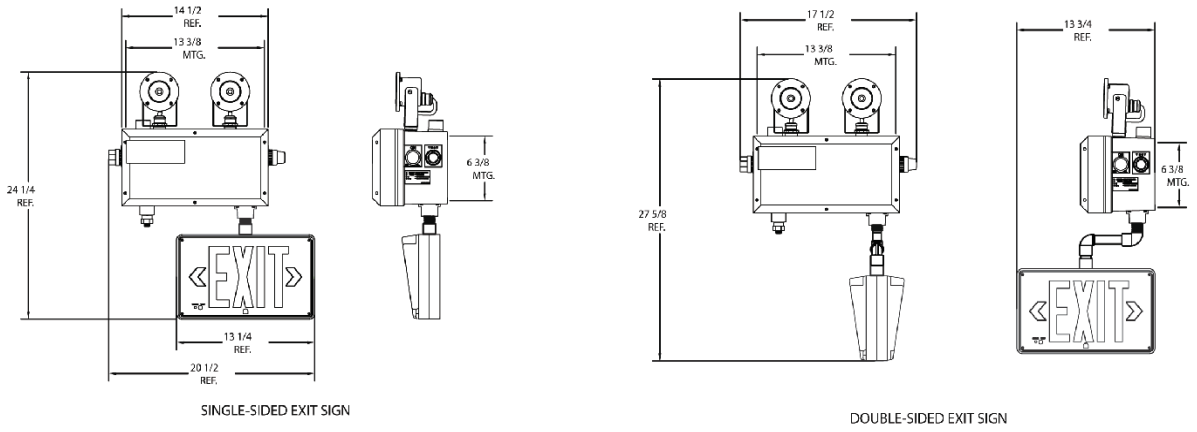

EXS, EXD Option – N2LPS LED Light-Pak™ with Optional Emergency Exit Luminaire

Dimensions (N2RF):

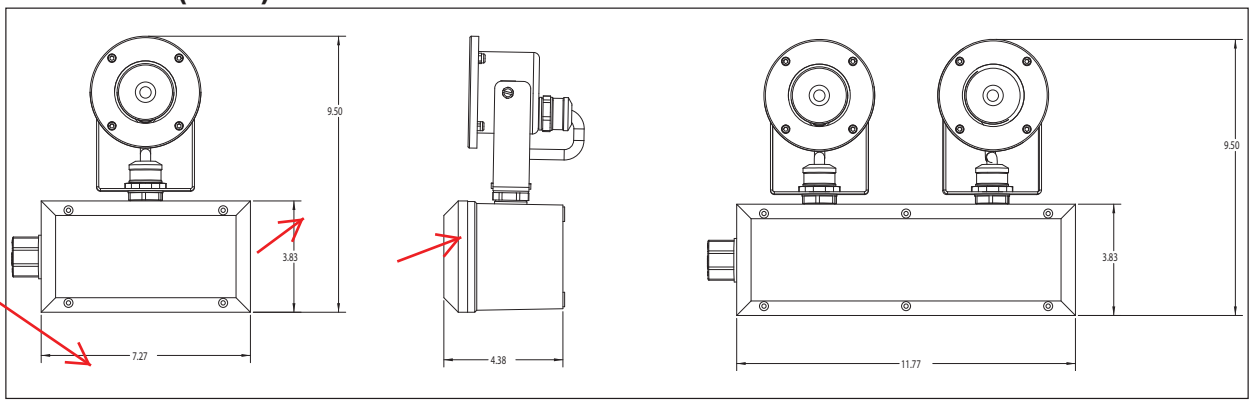

Detail Indication Logic:

Status Indication	Status Description	Status Definition
	No Light	AC Power Removed from Circuit
*	Steady Light (No Blinks)	Fully Charged
_	Light Blinks Once	Battery Charging
_	Light Blinks Twice	Battery Failure
_	Light Blinks Three Times	Circuit Failure

2L

 Copyright© 2011 Cooper Crouse-Hinds

COOPER Crouse-Hinds

LITHONIA LIGHTING

9140053440 Rev. 1

LHZ SERIES

EMERGENCY TWO-HEAD LED EXIT

Service Questions Call: (800) 334-8694

CLASS I DIV 2
HAZARDOUS LOCATION
GROUPS A, B, C, AND D
ZONE 2 GROUPS IIC, IIB AND IIA
CLASS II DIV 2 GROUPS F AND G
AND CLASS III DIV 1 AND 2

INSTALLATION AND OPERATING INSTRUCTIONS

IMPORTANT SAFEGUARDS

When using electrical equipment, basic safety precautions should always be followed, including the following:

READ AND FOLLOW ALL SAFETY INSTRUCTIONS

All servicing should be performed by qualified personnel only.

Do not mount near any heat producing equipment. Equipment should be mounted in locations and at heights where it will not be readily subjected to tampering by unauthorized personnel.

The use of accessory equipment not recommended by the manufacturer may cause an unsafe condition. Do not use this equipment for other than intended use.

In Class I Division 2 locations, do not replace any non-metallic hardware with metal hardware. Contact authorized agent for factory replacement parts.
In Class I Division 2 areas, install equipment in accordance with appropriate NEC articles plus any other applicable codes.

To avoid static discharge, do not attach any ungrounded metal hardware to the enclosure. Do not store or place flammable materials near lamp. Install only grounded wiring systems to supply this equipment

CAUTION – ensure lamp heads are positioned so they are aimed below horizontal

Do not use this equipment outdoors.

CAUTION: Halogen cycle lamp(s) are used in this equipment. To avoid shattering: Do not operate lamp in excess of rated voltage, protect lamp against abrasion and scratches and against liquids when lamp is operating, dispose of lamp with care. Halogen cycle lamps operate at high temperatures. Do not store or place flammable materials near lamp.

CAUTION: "To avoid electrical overload, total connected lamp load (factory and field installed) should not exceed output rating".
Free installation area of hazardous atmospheres before wiring equipment or servicing, this reduces the risk of accidental explosion due to inadvertent battery shorting during installation.

SAVE THESE INSTRUCTIONS

WARNING – Shut off AC power to branch circuits to which units will be connected. All wiring should be per NEC wiring methods for Hazardous locations.

To maintain warranty, equipment with batteries must be installed or placed on charge within prescribed period after shipment.

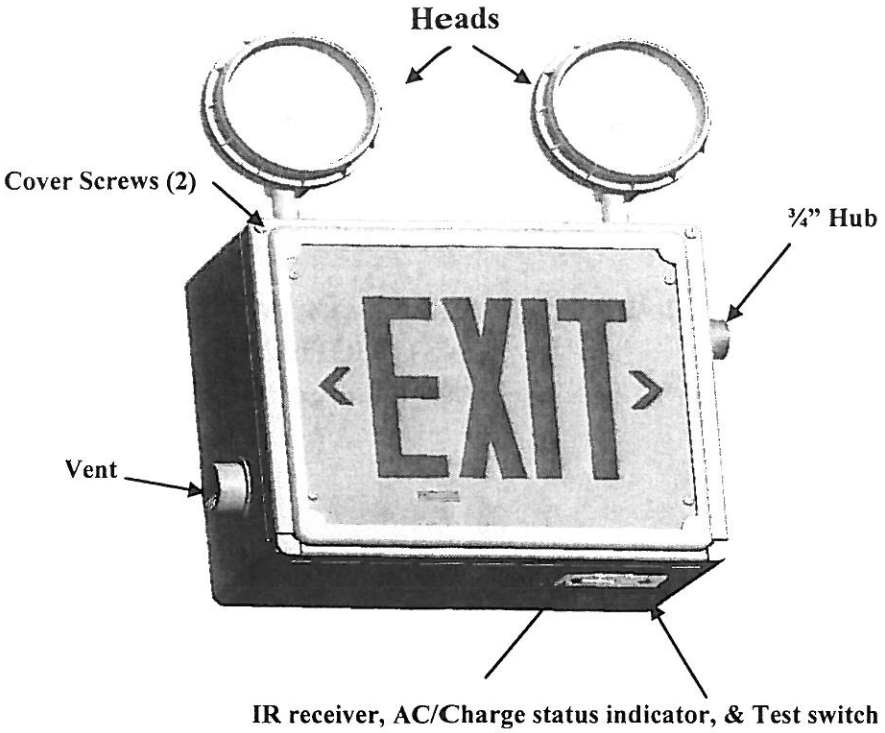

Figure 1

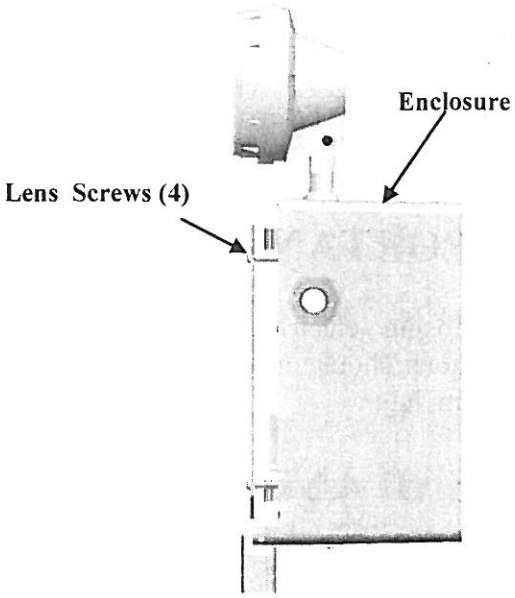

Figure 2

INSTRUCTIONS – INSTALLATION

1. Mount exit enclosure to wall using (4) thru holes or optional mounting feet. (See Figure 3).
2. Remove cover screws (2) and open cover. (See Figures 1 and 2).
3. Dismount exit lens by removing lens screws (4). (See Figures 1 and 2).
4. Connect ¾" conduit supply to ¾" hub on unit.
5. Hookup AC service to the connector assembly as follows:

120 VAC OPERATION		277 VAC OPERATION	
Black Wire	} - 120V Line	Blue Wire	} - 277V Line
Black Wire		Blue Wire	
White Wire	- Common	White Wire	- Common
Green Wire	- Ground	Green Wire	- Ground

Unused primary wire must be insulated individually to prevent shorting.

6. If Fire Alarm Flasher is used:
   a. Connect WHITE wire to 24VDC Positive and 24VDC Negative
   b. Use wire nuts for connection (not supplied).
7. Connect Battery connectors to the panel (See Figures 4 and 6).
8. Adjust head(s) as follows: (See Figure 3).
   a. Rotation – Loosen head nut and rotate head to desired position. Retighten head nut. An antirotation screw has been provided to ensure proper rotation.
   b. Angle – Loosen thumb screw passing through head swivel sufficiently to allow internal teeth to disengage. Position head to desired angle.
   c. Retighten both head nut and thumb screw.

CAUTION – ensure lamp heads are positioned so they are aimed below horizontal

9. A dual load terminal block is provided for lamp hook-up. Ensure total wattage of heads, both unit mounted and remote (if applicable), does not exceed unit rating. Factory mounted lamps are wired to the terminal block at points L+ and L-. All remote loads should be wired to the terminal block at RL+ and RL- (See Figure 5). Use wire gauge that limits voltage drop to an acceptable level (See page 6).
10. Chevron labels with self-adhesive backing are supplied. Apply label(s) to exit lens as necessary.
11. Remount exit lens using lens screws. Close cover and secure with cover screws.

INSTRUCTIONS – OPERATION

1. Energize AC power to exit. Unit will initiate normal power-up sequence (See page 4).

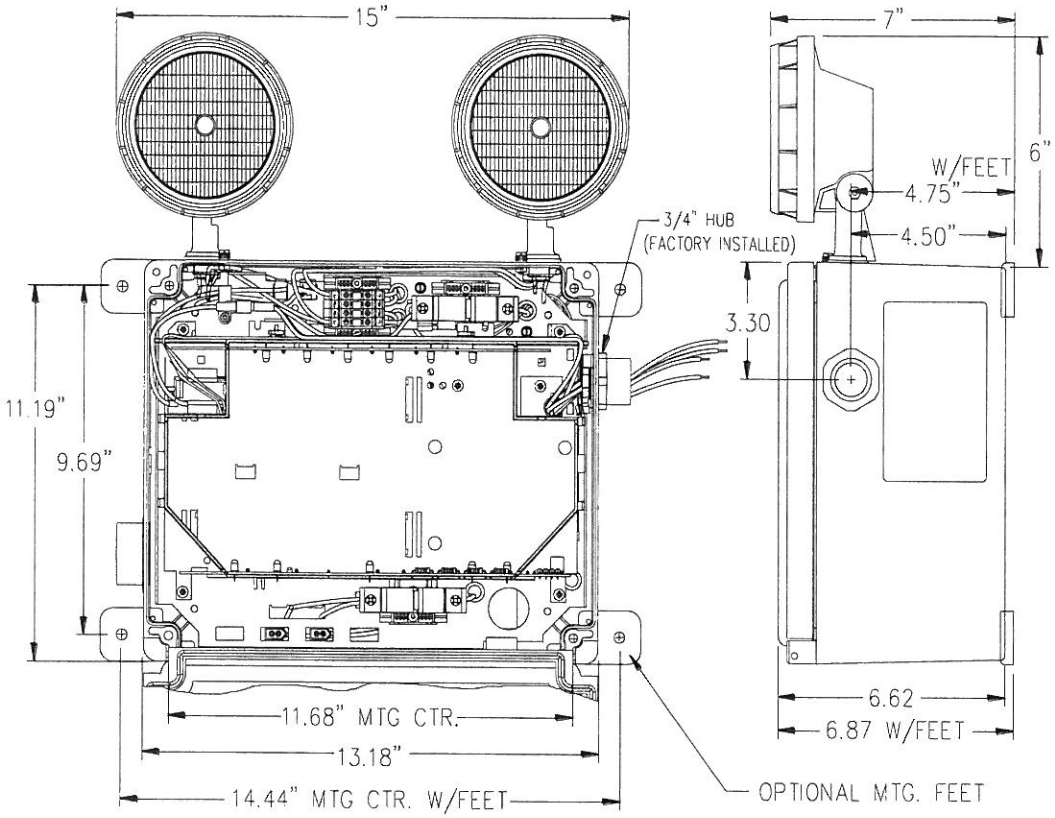

Figure 3

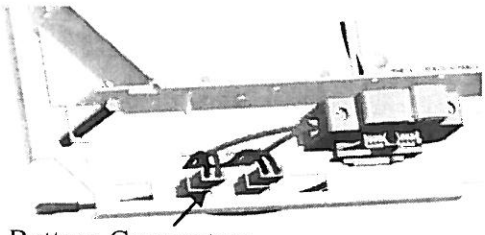

Battery Connectors

Figure 4

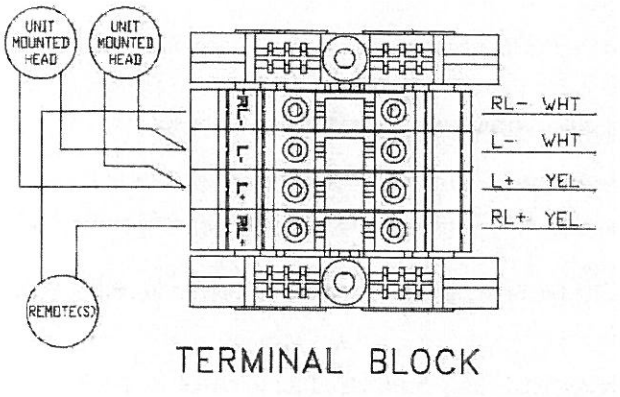

Figure 5

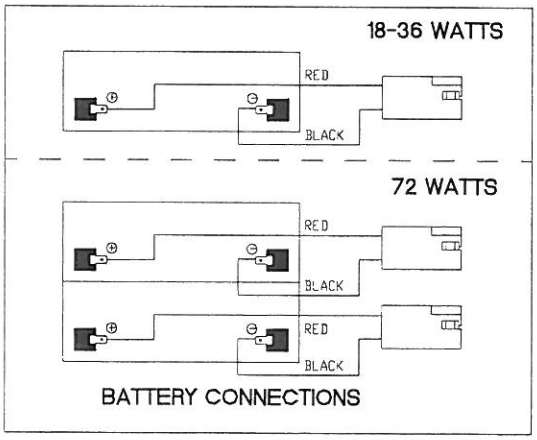

Figure 6

SELF-DIAGNOSTICS SYSTEM OPERATION

(EMERGENCY OPERATION UNITS ONLY)

Normal Power-Up Sequence

At power-up, the red and green LED indicators will alternately flash for one to two seconds. Next, the unit will go through a "Power-Up Quick Test" with the green LED flashing quickly. If no power-up faults were detected, the green LED will then flash slowly for up to 36 hours to indicate that the battery is charging. If any faults were detected during the "Power-Up Quick Test", these will be indicated by a flashing red LED indicator (see below for interpretation of flashing sequences). The red LED may be accompanied by a buzzer. This buzzer may be disabled by a short press of the test switch or by the "SILENCE ALARM" button on the remote tester and will remain disabled for a period of 196 hours. After the fault has been corrected, the red LED flash and buzzer will be cleared automatically and the unit will return to normal operation except in the case of lamp failure. Once relamping has been completed, perform a manual test to clear the fault.

Lamp Load Calibration

Once energized, the unit waits 36 hours while the batteries are charged and then performs a lamp load calculation automatically only once during initial startup. The system will detect a load loss of 10% and indicate a lamp failure of total load. Replace lamps as required. Upon lamp replacement, the system will return to normal operating status.
Manual Calibration: If, after installation and calibration, lamp load is increased or decreased the system will need to be manually calibrated for the new total load. To re-calibrate, press the test switch four consecutive times. Lamp re-calibration can also be accomplished with the optional remote control by pressing in sequence, 'Silence, Silence, Cancel, Silence'. The lamps will illuminate for a period of 30 seconds during the calibration process and then the unit will return to normal operation status. Manual calibration can be performed at any time after 36 hours of charge or when the indicator status light is solid green.

Emergency Operation

Emergency operation occurs when AC power fails. The unit remains in this mode until AC power is restored. During emergency operation, both red and green LED indicators are disabled. Upon restoration of AC power, the green LED will flash for up to 36 hours to indicate that the unit is in battery charging mode. Allow 72 hours for the battery to fully charge.

User Interface

Green LED Indicator

- Steady On – AC power is present and battery is fully charged
- Slow Flash – Battery charging
- Fast Flash – Unit is performing an automatic or manually initiated self-test

Red LED Indicator

- Single Flash – Battery fault
- Double Flash – Lamp failure
- Triple Flash – Charger fault
- Quad Flash – Emergency transfer failure

(If more than one fault condition is present simultaneously, the red LED will flash each fault pattern in sequence, and then repeat)

Red and Green LED Indicators Together

- Slow flashing red and green – Low line voltage
- Fast flashing red and green – High line voltage

Pushbutton Test Switch

- Long Press (over 0.5 seconds) – Transfers unit to emergency (battery) operation as long as button is depressed
- Short Press – Initiates various self tests
  - One Press – Cancel any self-test currently running
  - Two Presses – Start 1 minute self-test
  - Three Presses – Start 90 minute self-test
  - Seven presses – Forces a complete system reset

(The unit will allow up to seven 1 minute tests during the first 24 hours of operation. Allow at least 24 hours for battery charging before performing any extended amount of testing)

Buzzer – Sounds in unison with the flashing red LED if a fault is detected. May be disabled for up to 196 hours by a short press of the test switch.

IR Receiver – Used with the optional hand-held IR remote tester to initiate or cancel manual testing.

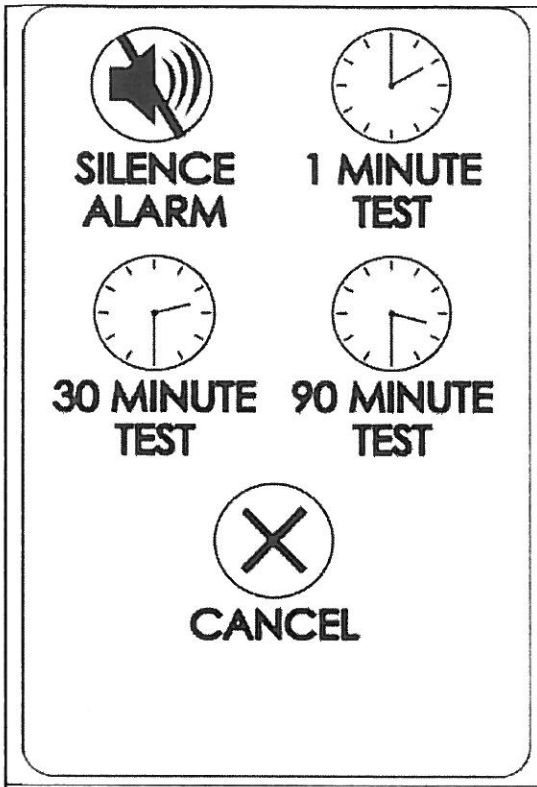

OPTIONAL REMOTE CONTROL

Front

Press appropriate button to perform the indicated test or silence the audible alarm.

Cancel stops any test currently in process.

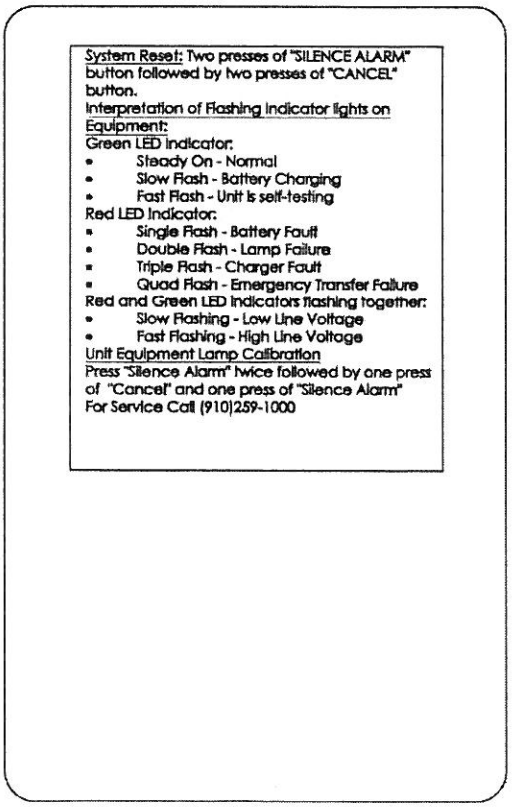

System Reset: Two presses of "SILENCE ALARM" button followed by two presses of "CANCEL" button.

Interpretation of Flashing Indicator lights on Equipment:

Green LED Indicator:

- Steady On - Normal
- Slow Flash - Battery Charging
- Fast Flash - Unit is self-testing

Red LED Indicator:

- Single Flash - Battery Fault
- Double Flash - Lamp Failure
- Triple Flash - Charger Fault
- Quad Flash - Emergency Transfer Failure

Red and Green LED Indicators flashing together:

- Slow Flashing - Low Line Voltage
- Fast Flashing - High Line Voltage

Unit Equipment Lamp Calibration

Press "Silence Alarm" twice followed by one press of "Cancel" and one press of "Silence Alarm"

For Service Call (910)259-1000

Back

Explanation of indicator light flash sequences.

Refer to Table 2 above for further information.

Top Assembly Drawing (For Reference only)

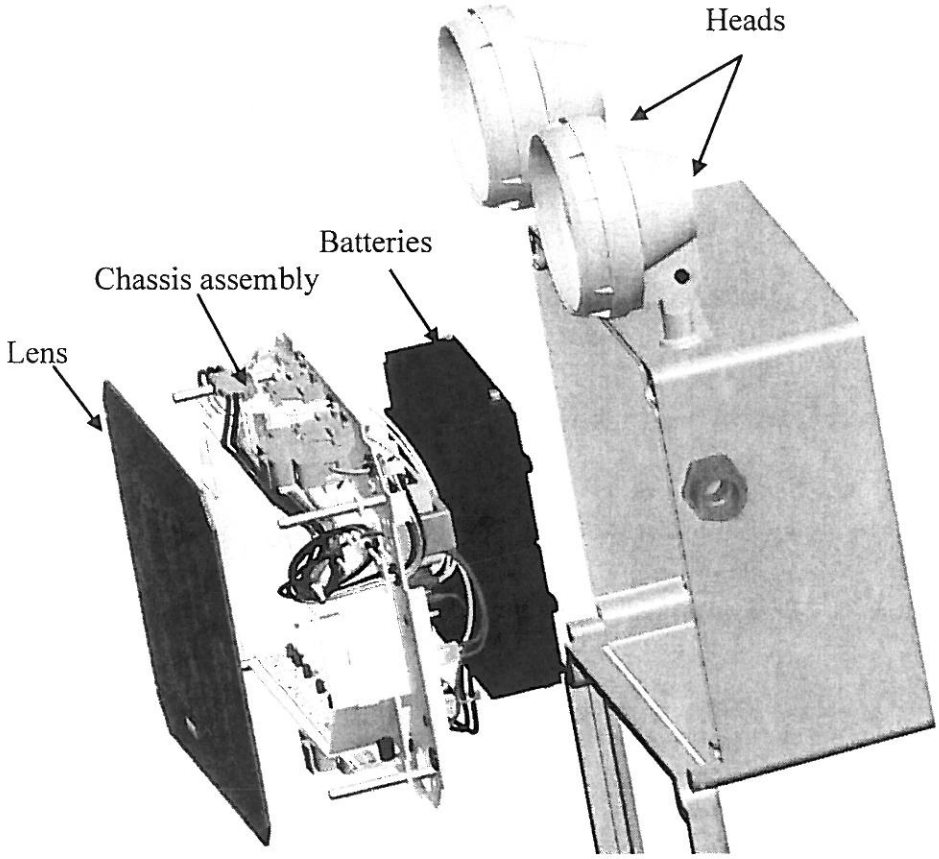

Figure 8

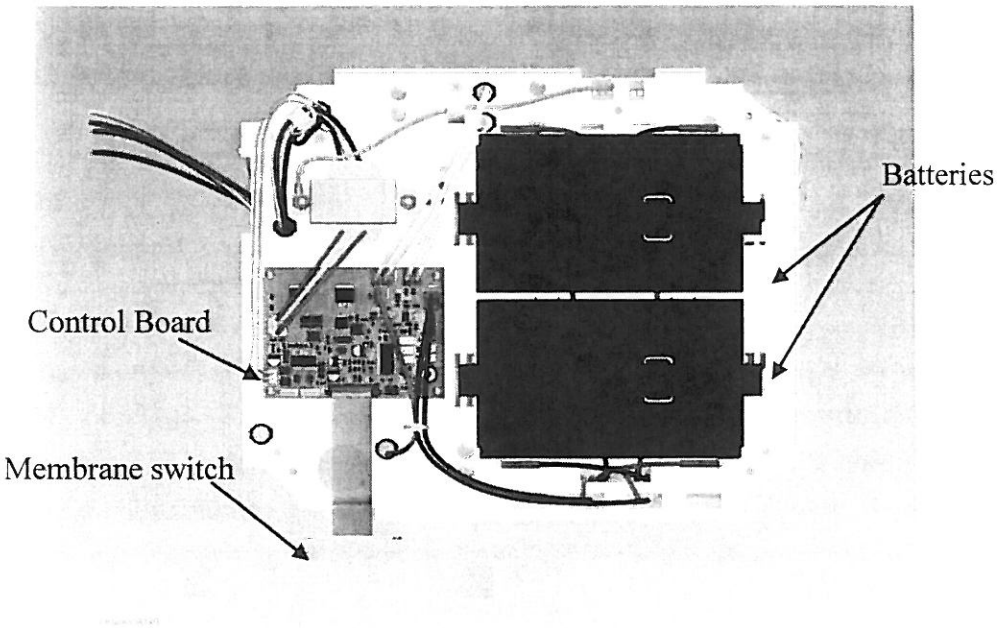

Chassis assembly (back view)

Figure 9

LHZ Series EMERGENCY TWO HEAD LED EXIT

WIRING CALCULATIONS FOR VOLTAGE DROP PROTECTION

IN EMERGENCY LIGHTING SYSTEMS

TO DESIGN A PROPER EMERGENCY LIGHTING SYSTEM, CIRCUIT RUNS MUST BE OF SUFFICIENT SIZE TO MAINTAIN A PROPER OPERATING VOLTAGE TO ALL LAMPS. MAXIMUM ALLOWABLE VOLTAGE DROP SHOULD NOT EXCEED 5%. PROPER WIRE SIZE IS DETERMINED FROM THE FOLLOWING FORMULA, TABLE AND EXAMPLE SHOWN BELOW.

$$L = \frac{CM \times EI}{I \times 22} \qquad CM = \frac{I \times 22 \times L}{EI}$$

$$EI = \frac{I \times 22 \times L}{CM} \qquad I = \frac{CM \times EI}{L \times 22}$$

CM = WIRE SIZE IN CIRCULAR MILLS
I = LOAD IN AMPERES (EMERGENCY MODE)
L = LENGTH OF WIRE RUN. (UNIT TO REMOTE LOAD)
EI = MAXIMUM ALLOWABLE VOLTAGE DROP. (5%)

USING THE ABOVE FORMULA AND HAVING CALCULATED THE CIRCULAR MILLS REQUIRED TO CARRY THE SPECIFIED LOAD AT A PREDETERMINED AND ALLOWABLE VOLTAGE DROP, THE FOLLOWING CHART WILL IDENTIFY THE NECESSARY WIRE GAUGE FROM THE CORRESPONDING CIRCULAR MILL SIZE LISTED.

WIRE GAUGE	AMPERE CAPACITY	OHMS PER 1000 ft	CIRCULAR MILL SIZE
12	20	1.586	6,530
10	25	.9972	10,380
8	35	.6271	16,510
6	50	.3944	26,250
4	70	.2480	41,740

EXAMPLE:

WHAT SIZE SHOULD BE USED FOR A 6-VOLT CIRCUIT TO TRANSMIT A CURRENT OF 4 AMPERES A DISTANCE OF 75 FEET WITH A VOLTAGE DROP OF NOT MORE THAN 5%?
EI = MAXIMUM ALLOWABLE VOLAGE DROP 5% OF SELECTED VOLTAGE:

USING 6 VOLTS x .05 = .3 VOLTS.

USING THE FORMULA AND SUBSTITUTING THE GIVEN QUANTITIES:

$$CM = \frac{4 \times 22 \times 75}{.3} = 22000 \text{ CIRCULAR MILLS NEEDED. (USE \#6 WIRE)}$$

NOTE:

SMALLEST PERMISSIBLE WIRE SIZE FOR SYSTEMS UNDER 50 VOLTS IS #12 FOR EMERGENCY LIGHTING EQUIPMENT UNDER ARTICLE 720-4 OF THE NATIONAL ELECTRIC CODE.

6 VOLT

WIRE SIZE	WATTS 12	24	60
#12	47	23	9
#10	75	37	15
#8	119	59	23
#6	189	94	38

WIRING DISTANCE IN FEET

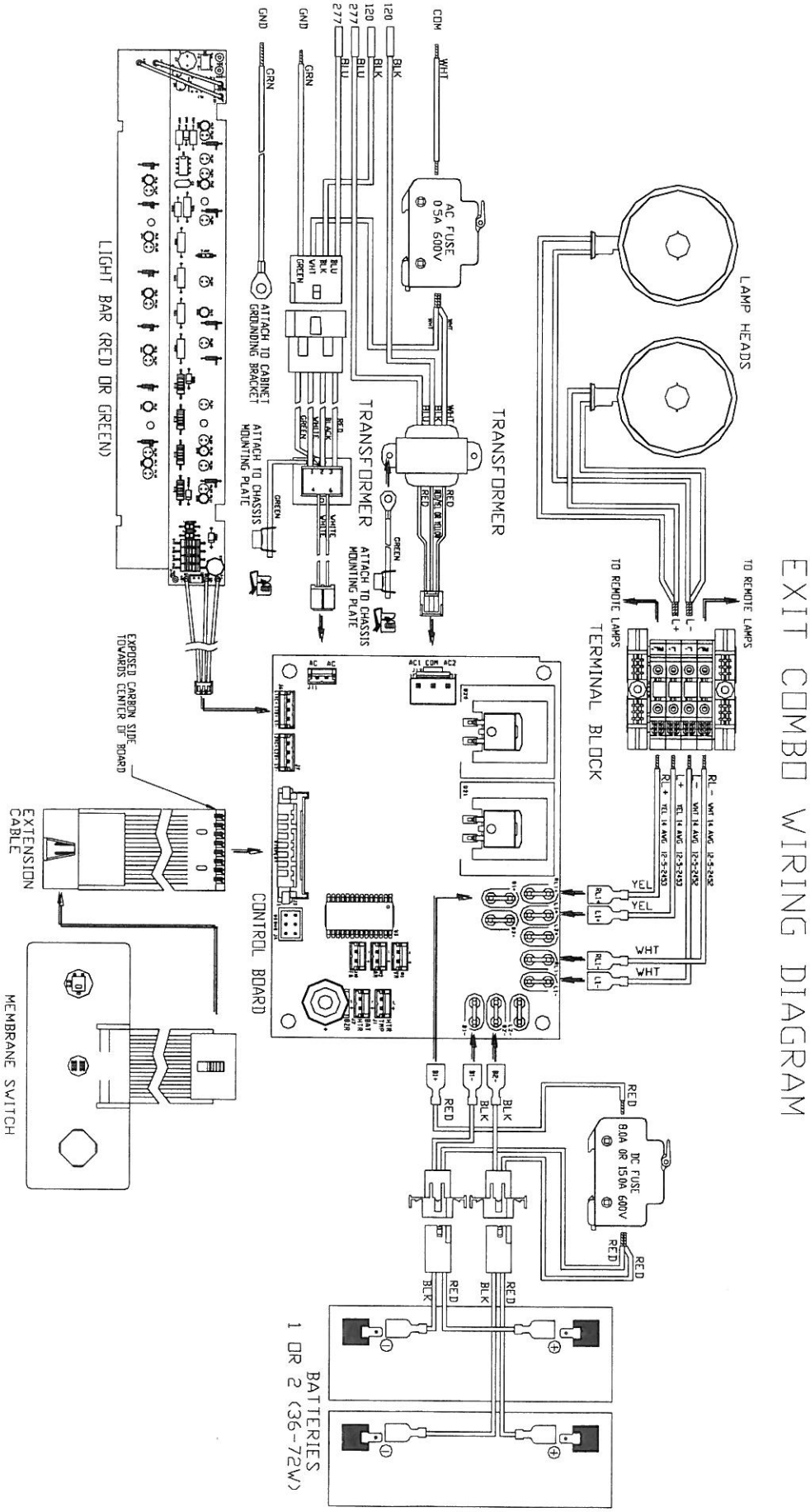
EXIT COMBO WIRING DIAGRAM
LAMP HEADS
TO REMOTE LAMPS
TO REMOTE LAMPS
TERMINAL BLOCK
TRANSFORMER
TRANSFORMER
AC FUSE 0.5A 600V
COM
120
120
277
277
GND
GND
WHT
BLK
BLU
GRN
GRN
ATTACH TO CABINET GROUNDING BRACKET
ATTACH TO CHASSIS MOUNTING PLATE
ATTACH TO CHASSIS MOUNTING PLATE
LIGHT BAR (RED OR GREEN)
EXPOSED CARBON SIDE TOWARDS CENTER OF BOARD
EXTENSION CABLE
CONTROL BOARD
MEMBRANE SWITCH
DC FUSE 8.0A OR 15.0A 600V
RED
BLK
BATTERIES 1 OR 2 (36-72V)

Figure 7

EV LED Series Explosionproof LED Luminaires

Cl. I, Div. 1, Groups C, D
Cl. I, Zone 1 & 2, Group IIB
Cl. II, Groups E, F, G
Cl. III, Simultaneous Presence

UL Listed
cUL Listed (certified by UL to CSA standards)
T6 temperature rating at 55°C
Marine and wet locations
Type 4X, IP66

Factory-sealed
Improve safety, reliability and energy efficiency

The enhanced EV LED product offering provides the same durability and reliability of a traditional EV incandescent or HID fixture, coupled with the low cost of ownership and energy efficiency of Cooper Crouse-Hinds LED technology. High-performance LEDs and a solid state electronic driver provide light where you need it, at a fraction of the operating costs of HID and incandescent lighting technologies.

EV LED Series Luminaires are designed to provide durable and energy-efficient lighting in a variety of applications. Incandescent and HID general illumination models are available, along with a wildlife friendly model and optional DC input voltage.

Applications:

- Two lumen outputs for replacement of existing HID and incandescent luminaires
- Locations requiring continuous and consistent light levels in extreme ambient temperatures
- Areas requiring frequent on-and-off of lights
- Where flammable vapors, gases, ignitable dusts, fibers or flyings are present; indoors or outdoors
- Where extremely corrosive, wet, dusty, hot and/or cold conditions exist
- Type 4X, marine, wet locations and hose-down environments
- Manufacturing plants; heavy industrial, chemical, petrochemical or pharmaceutical facilities; platforms; loading docks; tunnels; outdoor wall and stanchion mounted general area lighting

Certifications & Compliances:

NEC & CEC

- Class I, Division 1, Groups C, D
- T6 temperature rating at 55°C
- Class I, Zone 1 & 2, Group IIB
- Class II, Groups E, F, G
- Marine and wet locations, Type 4X, IP66
- UL Listed
- cUL Listed (certified by UL to CSA standards)

NEC

- Class III, simultaneous presence

UL Standards

- 844 Electric Fixture Hangers for Hazardous Locations
- 1598 Luminaire
- 1598A Luminaire for Installation on Marine Vessels

CSA Standards

- C22.2 No. 137

EV LED Benefits:

Enhance safety and productivity

- Instant illumination and re-strike
- Better visibility with crisp, white light
- T6 temperature rating – safely operate in the most hazardous environments
- Cold temperature operation / no warm-up required

Reduce operation and maintenance costs

- Easy installation – compact modular fixture attaches onto existing Champ mounting module
- Energy-efficient – up to 85% reduction in energy used
- Provides up to 50,000 hours rated life – eliminates need for frequent lamp replacement
- Contains no mercury or other hazardous substances

Reliable performance in any environment

- Shock- and vibration-resistant solid-state luminaires have no filaments or glass components that could break – greatly reduces the risk of premature failure
- Operating ambient -30°C to 55°C (AC), -30°C to 40°C (DC)
- Dark sky compliant

Standard Materials:

- Body, mounting modules and guard – copper-free aluminum with Corro-free™ epoxy powder coat
- Globe – heat and impact-resistant glass
- Gaskets – silicone
- External hardware – stainless steel

Resubmit, Manufacturer changed catalog number.
Type E - EVLEDBX2C201

Electrical Ratings:

	C201	C701	A201	C201/DC
Voltage Range	100-277V	100-277V	100-277V	10-30 VDC
Frequency	50 / 60 Hz	50 / 60 Hz	50 / 60 Hz	50 / 60 Hz
Input Power	30W	36W	36W	26W
Input Amps (Max.)	0.30A	0.36A	0.36A	2.8A
Power Factor	0.98	0.99	0.98	0.99

LED System:

- High brightness light emitting diode (LED) arrays
- Color temperature: 3000K (CRI 82) and 5600K (CRI 65) options available
- Amber color available for wildlife friendly applications
- Advanced heat sink design ensures LED does not exceed manufacturer's temperature ratings across all specified ambient conditions
- LM-79 and LM-80 reports available

 Copyright© 2012 Cooper Crouse-Hinds

2L EV LED Series Explosionproof LED Luminaires

Factory-sealed
Improve safety, reliability and energy efficiency

Cl. I, Div. 1, Groups C, D
Cl. I, Zone 1 & 2, Group IIB
Cl. II, Groups E, F, G
Cl. III, Simultaneous Presence

UL Listed
cUL Listed (certified by UL to CSA standards)
T6 temperature rating at 55°C
Marine and wet locations
Type 4X, IP66

Ordering Information:

Mounting Style	Cool Color Temperature		Warm Color Temperature		Wildlife Friendly
	C201	C701	W201	W701	A201
Luminaire Only	**EVLEDC201**	**EVLEDC701**	**EVLEDW201**	**EVLEDW701**	**EVLEDA201**
¾" Pendant	**EVLEDA2C201**	**EVLEDA2C701**	**EVLEDA2W201**	**EVLEDA2W701**	**EVLEDA2A201**
1" Pendant	**EVLEDA3C201**	**EVLEDA3C701**	**EVLEDA3W201**	**EVLEDA3W701**	**EVLEDA3A201**
¾" Ceiling Mount Thru Feed	**EVLEDCX2C201**	**EVLEDCX2C701**	**EVLEDCX2W201**	**EVLEDCX2W701**	**EVLEDCX2A201**
1" Ceiling Mount Thru Feed	**EVLEDCX3C201**	**EVLEDCX3C701**	**EVLEDCX3W201**	**EVLEDCX3W701**	**EVLEDCX3A201**
¾" Wall Mount Thru Feed	**EVLEDBX2C201**	**EVLEDBX2C701**	**EVLEDBX2W201**	**EVLEDBX2W701**	**EVLEDBX2A201**
1" Wall Mount Thru Feed	**EVLEDBX3C201**	**EVLEDBX3C701**	**EVLEDBX3W201**	**EVLEDBX3W701**	**EVLEDBX3A201**
¾" Bulkhead Mount	**EVLEDBH2C201**	**EVLEDBH2C701**	**EVLEDBH2W201**	**EVLEDBH2W701**	**EVLEDBH2A201**
1¼" Stanchion	**EVLEDJ4C201**	**EVLEDJ4C701**	**EVLEDJ4W201**	**EVLEDJ4W701**	**EVLEDJ4A201**

To order a fixture without a guard, remove '1' from the end of the catalog number (Example: EVLEDAC20 for ¾" Pendant, No Guard).
To order a fixture with 10-30VDC Input Voltage (available on 20 Series Only), add /DC to the end of the catalog number (Example: EVLEDAC201/DC).
To order a fixture with colored inserts (available on C20 Series Only), add a "G" (for green) or "R" (for red) to the end of the catalog number (Example: EVLEDAC201G).

Family Tree:

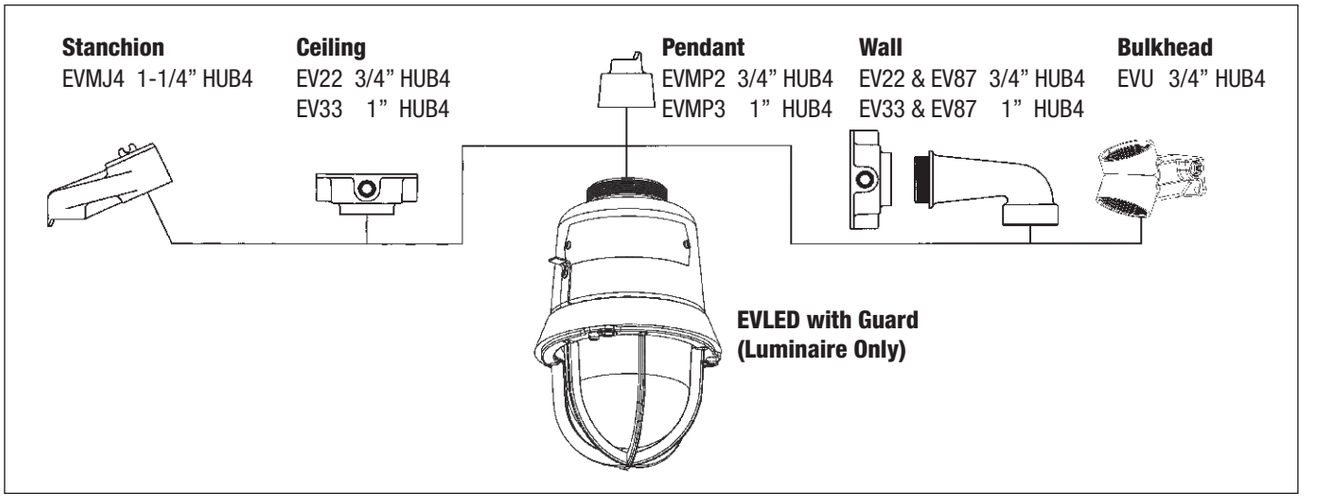

2L

www.crouse-hinds.com US: 1-866-764-5454 CAN: 1-800-265-0502 Copyright© 2012 Cooper Crouse-Hinds
COOPER Crouse-Hinds

EV LED Series Explosionproof LED Luminaires

Factory-sealed
Improve safety, reliability and energy efficiency

Cl. I, Div. 1, Groups C, D
Cl. I, Zone 1 & 2, Group IIB
Cl. II, Groups E, F, G
Cl. III, Simultaneous Presence

UL Listed
cUL Listed (certified by UL to CSA standards)
T6 temperature rating at 55°C
Marine and wet locations
Type 4X, IP66

Photometrics:

POLAR PLOT (EVLEDC701)

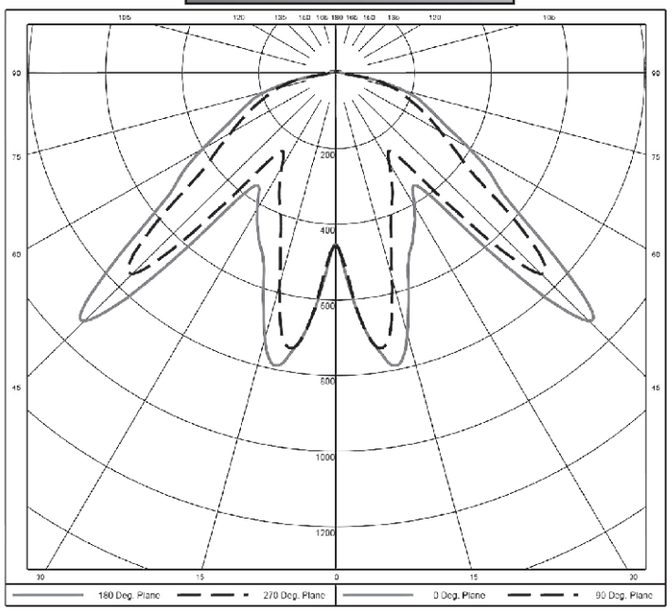

ZONE (DEGREES)	LUMENS	% OF LUMINAIRE
0-30	451	20.1%
0-40	688	30.6%
0-60	1688	75.1%
0-90	2196	97.7%
90-180	51	2.3%
0-180	2248	100.0%

DISTANCE TO MOUNTING HEIGHT
Isofootcandle chart shows illuminance in footcandles at ground level
(EVLEDC701)

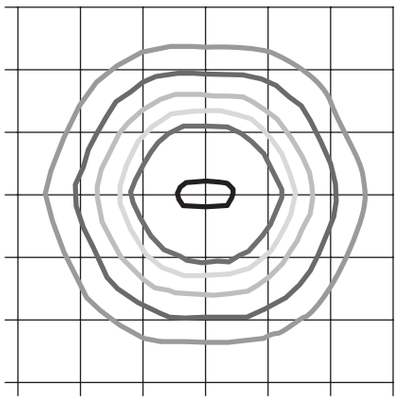

ISOFOOTCANDLE CHART
Footcandle Values for Isofootcandle Lines

A B C D E F

Mtg. Hgt.	A	B	C	D	E	F
10'	4.00	2.00	1.00	0.50	0.25	0.12
12'	2.78	1.39	0.69	0.35	0.17	0.09
16'	1.56	0.78	0.39	0.20	0.10	0.05
20'	1.00	0.50	0.25	0.12	0.06	0.03
25'	0.64	0.32	0.16	0.08	0.04	0.02

LUMEN OUTPUT FOR OTHER EV LED LUMINAIRES

Luminaire Series	System Watts	Lumens
C201	30W	1670
A201	36W	1195
C201/DC	26W	1493

 Copyright© 2012 Cooper Crouse-Hinds

2L EV LED Series Explosionproof LED Luminaires

Factory-sealed
Improve safety, reliability and energy efficiency

Cl. I, Div. 1, Groups C, D
Cl. I, Zone 1 & 2, Group IIB
Cl. II, Groups E, F, G
Cl. III, Simultaneous Presence

UL Listed
cUL Listed (certified by UL to CSA standards)
T6 temperature rating at 55°C
Marine and wet locations
Type 4X, IP66

Dimensions (inches):

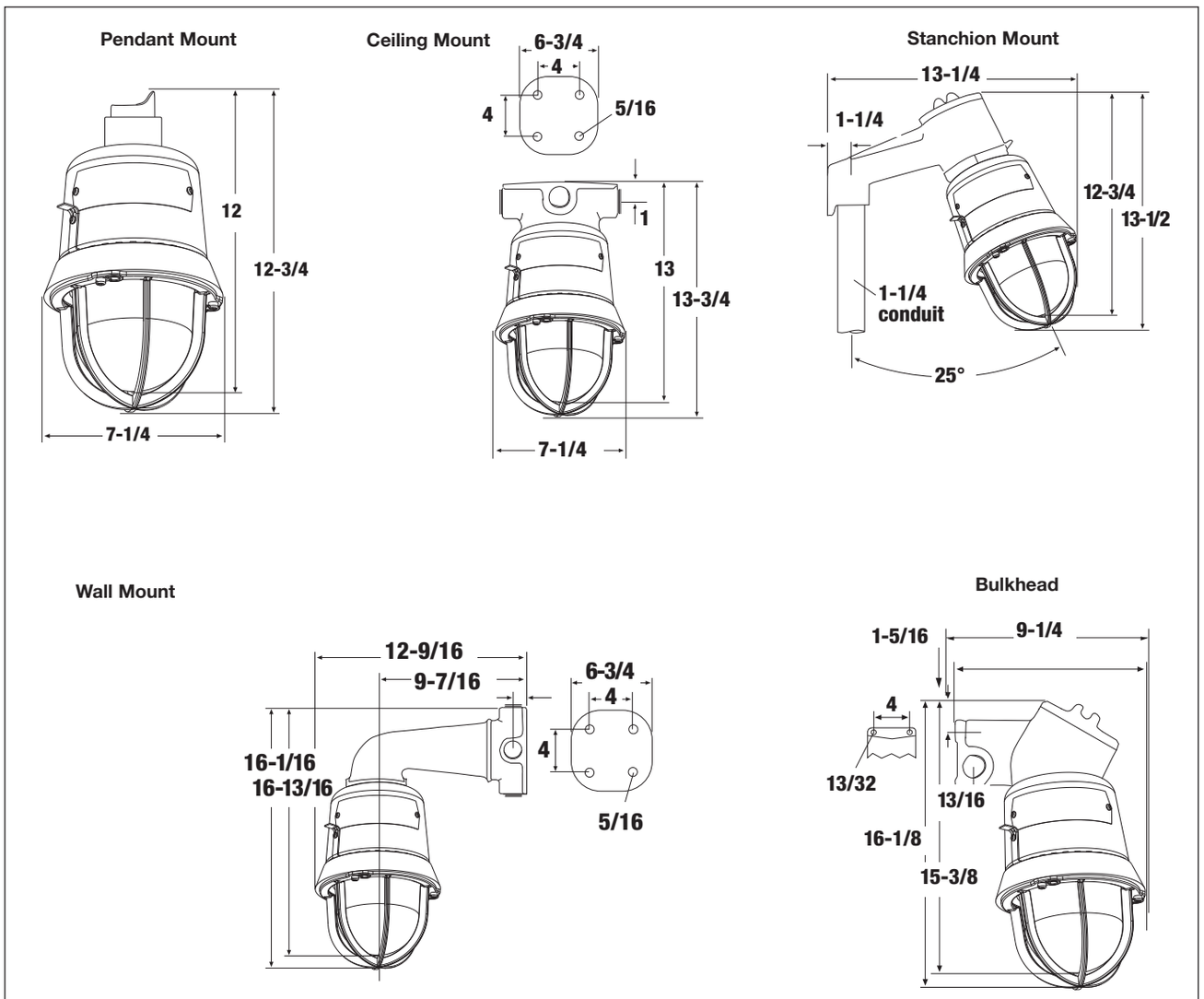

Net Weight (lbs.):

EV LED with Guard	11 lbs.
Add Mounting Modules:	
Pendant	1.0 lbs.
Ceiling	2.0 lbs.
Wall	4.5 lbs.
Bulkhead	2.2 lbs.
Stanchion	2.5 lbs.

2L

 Copyright© 2012 Cooper Crouse-Hinds

COOPER Crouse-Hinds

Submitting Agency:	Description:	Type:
jcwrightlighting phone: 509-535-0098	**IXN50 (1) RWTHF12 (1)RWTHFE12** Project: **WWTP IMPVT'S WENATCHEE** Notes: note: explosion proof exits are NOT available w/green lettering - red only	**F**

CHLORIDE SYSTEMS

TYPE: _____

CATALOG NO.: _____

General Description

The IX Series is ideal for use in hazardous locations where explosive materials may be present. The IX Series is suitable for use in extreme hazardous location areas. The IX Series meets the Buy American requirements.

Illumination

Illumination is accomplished with incandescent or compact fluorescent R-Series Fixtures. The R-Series Fixtures must be ordered separately.

Dimensions

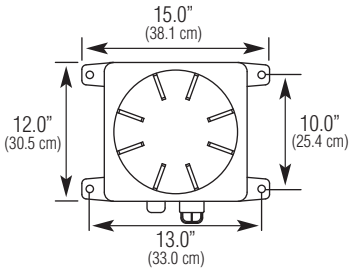

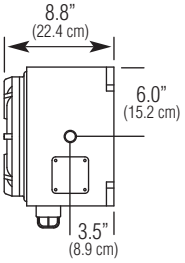

Includes clearance holes for mounting with 1/2" bolts.

Dimensions are approximate and subject to change.

IX Series

Class I, II, & III, Division I Emergency Lighting Units

6 and 12 Volt, 14 to 85 Watts Nickel Cadmium or Pure Lead Battery

Housing

Copper-free cast aluminum enclosure designed to withstand the pressure of explosions generated by internal arc without propagating them into the hazardous atmosphere.

Suitable for use in Class I, Div. 1, Groups C & D, Zones 0, 1 & 2, Groups IIA, IIB + H_2 & IIC; Class I, Div. 2, Groups C & D, Zone 2, Groups IIA, IIB + H_2 & IIC; Class II, Div. 1, Groups E, F & G; Class II, Div. 2, Groups F & G; and Class III hazardous location areas.

Enclosure and cover are constructed separately. Cover is threaded to allow easy attachment and removal. Enclosure includes three threaded openings for 3/4" rigid conduit — one for AC input and two for mounting hazardous fixtures.

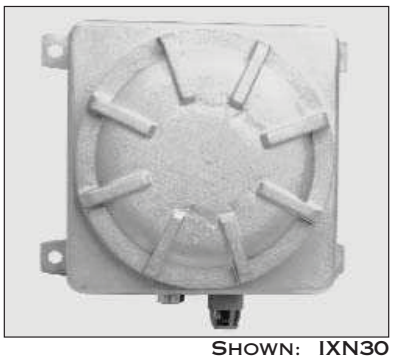

SHOWN: IXN30

Electronics

120/277 VAC dual voltage input with surge-protected, solid-state circuitry provides for a reliable charging system. IXL85 uses a temperature compensating charger.

Charging system is complete with low voltage disconnect, AC lockout, brownout protection, AC indicator lamp and test switch.

IXPN14 power pack operates 7 watt compact fluorescent hazardous fixtures in both AC and emergency modes.

IXN30, IXN50 and IXL85 power units operate 6 and 12 volt incandescent hazardous fixtures in emergency mode only.

Battery

Maintenance free, sealed nickel cadmium battery has an estimated service life of 10 years, and an operating temperature range of 20°F (-7°C) to 95°F (35°C)

IXL85 uses a pure lead battery and has an estimated service life of 5 years when operated in ambient temperatures of 65°F (19°C) to 85°F (30°C).

Battery supplies 90 minutes of emergency power

Code Compliance

UL 924, 844, 1203 and 1604 listed

NFPA 101, NEC, BOCA, OSHA and IBC illumination standards

Electrical Specifications

120 VAC - 0.50 amps, 60 watts
277 VAC - 0.22 amps, 60 watts

Warranty

Three year full electronics warranty

Five year full plus five year prorated nickel cadmium battery warranty

One year full plus four year prorated pure lead battery warranty

Ordering Information (Example: IXPN14TD1)

IXN50 — [ ]

SERIES/ BATTERY

6 Volt, Nickel Cadmium
IXN30 = 28 Watt Power Pack, Incandescent Lamp Operation, Emergency Operation Only [2]
IXPN14 = 14 Watt Power Pack, Compact Fluorescent Lamp Operation, AC & Emergency Operation [1]
6 Volt, Pure Lead
IXL85 = 85 Watt Power Pack, Incandescent Lamp Operation, Emergency Operation Only [2]
12 Volt, Nickel Cadmium
IXN50 = 50 Watt Power Pack, Incandescent Lamp Operation, Emergency Operation Only [3]

OPTIONS

EX = Special Input Transformer (Specify voltage & frequency)
TD1 = 120 VAC Time Delay [4]
TD2 = 277 VAC Time Delay [4]

NOTES:
1) For "Normally On" use exclusively with RWHFP7, RPHFP7, and RCHFP7 remotes. Maximum remote distance is 8 feet.
2) For "Normally Off" use exclusively with R Series 6 VDC remotes.
3) For "Normally Off" Use exclusively with R Series 12 VDC remotes.
4) 15 minute delay.

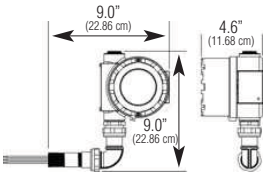

EVLA12

ACCESSORIES (order as a separate line item)

EVLA12 = 12V, 12W Directional Head (see photo & dimensions above)

Submitting Agency:	Description:	Type:
jcwrightlighting phone: 509-535-0098	**IXN50 (1) RWTHF12 (1)RWTHFE12** Project: **WWTP IMPVT'S WENATCHEE** Notes: note: explosion proof exits are NOT available w/green lettering - red only	**F**

Specification Data for IX Series Hazardous Location Emergency Lighting Power Packs

Housing

Copper-free cast aluminum enclosure is designed to withstand the pressure of explosions caused by internal arc without propagating them into the hazardous atmosphere.

The enclosure and cover are constructed separately. Threaded cover allows easy attachment and removal from enclosure. Enclosure includes three threaded openings for 3/4" rigid conduit — one for AC input and two for mounting hazardous fixtures.

Housing is suitable for use in Class I, Div. 1, Groups C & D, Zones 0, 1 & 2, Groups IIA, IIB + H_2 & IIC; Class I, Div. 2, Groups C & D, Zone 2, Groups IIA, IIB + H_2 & IIC; Class II, Div. 1, Groups E, F & G; Class II, Div. 2, Groups F & G; and Class III hazardous location areas.

Sample Application

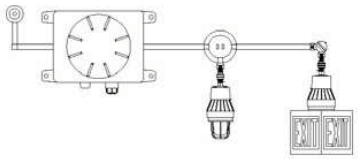

The above sample application consists of:
- (1) IXPN14 - 14 watt power pack for exclusive use with compact fluorescent fixtures
- (2) SEA - Elbow arms
- (1) RPHP7 - 7 watt compact fluorescent lamp fixture [1]
- (1) RPHEP7 - 7 watt compact fluorescent lamp fixture with exit accessory [1]

NOTES:

1) Operates in AC and emergency mode.

Refer to R-Series Fixtures specification sheet for ordering information.

Electronics

120/277 VAC dual voltage input with surge-protected, solid-state charging circuitry provides for a reliable charging system. The charging system is furnished with low voltage disconnect, AC lockout, brownout protection, AC indicator lamp and test switch.

The low voltage disconnect (LVD) feature will disconnect the battery prior to an unacceptable deep discharge, but not before the required 90 minute emergency operation.

The AC lockout feature prevents battery drain prior to the initial energizing of utility power, and allows the installer to complete all wiring and electrical connections without energizing the emergency circuit.

The brownout protection circuitry will automatically switch the unit into the emergency mode if the utility voltage sags below 20% of nominal.

Battery charging circuitry is entirely solid-state, and utilizes a constant current charger for nickel cadmium battery units. A fully automatic, voltage regulated charger is used for pure lead battery units. Battery recharge time after full discharge is less than the required UL 924 standard.

Line sensitive electronics cause an instantaneous transfer to battery power if utility power is lost, or a brownout condition is detected. When line voltage is present and stabilized, the transfer circuitry switches back to normal operation and begins recharging the battery. The transfer circuitry can be tested via a momentary test switch located on the housing.

Battery

Maintenance free, sealed nickel cadmium or pure lead batteries are available.

Standard sustained emergency operation is for 90 minutes with the illumination source providing full light output.

The suggested operating temperature range for nickel cadmium batteries is 20°F (-7°C) to 95°F (35°C), and the battery has an expected service life of 10 years.

Electrical Specifications

120 VAC - 0.50 amps, 60 watts
277 VAC - 0.22 amps, 60 watts

Code Compliance

The IX Series meets or exceeds all performance standards as required by UL 924, NFPA 101, NEC, BOCA, OSHA and IBC.

Operation

DC Voltage	Unit	Watts to 87½ of Rated Voltage*			
		1½ hrs.	2 hrs.	4 hrs.	8 hrs.
6	IXPN14	14	10.5	6.75	—
	IXN30	30	22.5	14.4	—
	IXL85	85	63.75	40.8	14.5
12	IXN50	50	37.5	24	8.5

* Per NEC Specifications

Suggested Specification

Furnish and install Chloride's emergency lighting unit model _____. The unit shall be constructed to meet Underwriter's Laboratories, Inc. Standard #924 and the National Electrical Code (NEC).

INSTALLATION AND OPERATION - Unit shall be easily field connected to a 120 or 277 VAC, 60 hertz, unswitched power source. Installation must comply with the NEC as well as other applicable codes. Upon utility power failure or brownout, the unit shall automatically transfer to battery power and maintain the required illumination level for a minimum period of 90 minutes. Upon restoration of utility power, the charger shall restore the battery to full charge within UL 924 requirements following a rated discharge of not more than 90 minutes.

CHARGER - Product shall utilize either a constant current (nickel cadmium) or fully automatic, voltage regulated (pure lead) charging system. The charging system shall maintain the battery at full capacity without the need for periodic exercising or equalization. The following features shall be standard: Low voltage disconnect (LVD), brownout protection and AC lockout.

BATTERY - The battery shall be either a maintenance free, sealed nickel cadmium or a pure lead battery. The nickel cadmium battery shall utilize sintered plate construction and polypropylene separators for trouble-free operation in ambient temperatures up to 95°F (35°C). Nickel cadmium batteries shall be supplied with a five year full warranty, and pure lead batteries shall be supplied with a one year full warranty.

ENCLOSURE - The unit housing shall be constructed of copper-free cast aluminum. The enclosure and cover shall have separate construction. The threaded cover shall allow easy attachment and removal from the enclosure. The enclosure shall include three threaded openings for 3/4" rigid conduit — one for AC input and two for mounting hazardous fixtures.

ISO 9001 AMERICAN GLOBAL STANDARDS CERTIFIED

CHLORIDE SYSTEMS

272 West Stag Park Service Road • Burgaw NC 28425
Telephone: (910) 259 1000 • Facsimile: (800) 258 8803
www.chloridesys.com

Submitting Agency:	Description: ACS67-82-120-EB/PI Project: WWTP IMPVT'S WENATCHEE Notes: GUTH	Type: G
jcwrightlighting phone: 509-535-0098		

PLASCOLUME

Stainless Steel Fluorescent for Hazardous and Wet Applications

FEATURES
- High lumen package
- Stainless steel
- Prismatic DR acrylic lens
- 4 or 8 foot
- Hazardous or wet locations
- Low pressure hosedown

BENEFITS
- Corrosion resistant
- Excellent brightness control
- Resists abuse
- Requires less fixtures
- Toolless entry

APPLICATIONS
- Food processing
- Car wash
- Petrochemical plants
- Wastewater treatment
- Paper mills

Specifications/Features

GENERAL
- Remains leak-free when subjected to low pressure water washdown.
- Corrosion resistant stainless steel fixture.
- Fixture is listed to be installed in the 0° Nadir configuration, lens down.

CONSTRUCTION
- Housing formed entirely of 22 ga. 304 stainless with a mill (2B) finish.
- End caps riveted and silicone sealed to channel.
- Closed stainless steel rivets used exclusively to prevent leaks.
- Ballast mounted with weld studs to eliminate unnecessary penetrations of the housing.
- Supplied with 1/2" cast aluminum hubs. Optionall 3/4" and SS.

DOOR FRAME/LENS
- Lens extruded of 100% DR Virgin Acrylic with embossed prisms for brightness control.
- Lens is sealed against the housing with an extruded PVC gasket held in place with 304 Stainless C-channel which distributes the force of the clamps uniformly over the gasket.
- The lens frame is clamped to the body with six (ten on 8' housings) stainless "no tool" cam latches mounted to the housing with stainless closed rivets.
- Vandal resistant version uses polycarbonate lens.

One piece molded PVC gasket compression fit designed into 304 Stainless steel lens frame.

Stainless steel swivel latches secure lens and provide easy "toolless" access.

LISTINGS
- Listed "Wet Location, Covered Ceilings Only" with the HL version fixture listed "Hazardous Locations." Class I, Division 2, Groups A,B,C,D; Class II, Division 2, Group G; and Class III. Temperature code is T3C (40°C Ambient).
- Listed for use in Canada.

ELECTRICAL
- The 430MA ballast is energy saving Class P and appropriate to the lamp and voltage specified.
- In the 800MA versions the ballast is mounted to the body with aluminum heat radiators to prolong ballast life, and permit mounting.
- All fixtures carry the IBEW Union label to ensure quality.

Submitting Agency:	Description:	Type:
jcwrightlighting phone: 509-535-0098	**ACS67-82-120-EB/PI** Project: **WWTP IMPVT'S WENATCHEE** Notes: GUTH	**G**

Photometrics

Coefficients of Utilization
Acrylic 2 Lamp, 40W Fluorescent ACS7762/120/HL

Ceiling Refl.	80%			50%			10%		
Wall Refl.	50	30	10	50	30	10	50	30	10
RCR	20% Effective Floor Cavity Reflectance								
1	.69	.66	.63	.63	.60	.58	.55	.54	.52
2	.61	.56	.53	.55	.52	.49	.49	.47	.45
3	.54	.49	.45	.50	.46	.43	.44	.42	.39
4	.48	.43	.39	.44	.40	.37	.40	.37	.34
5	.43	.38	.33	.40	.35	.32	.36	.32	.30
6	.39	.33	.29	.36	.32	.28	.33	.29	.26
7	.35	.30	.26	.33	.28	.24	.30	.26	.23
8	.32	.26	.22	.29	.25	.21	.27	.23	.20
9	.29	.23	.20	.27	.22	.19	.24	.21	.18
10	.25	.20	.16	.24	.19	.16	.21	.17	.15

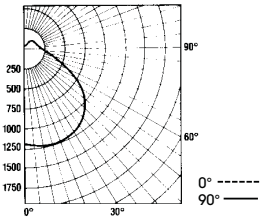

S/MH Ratio 1.3:1
Total Lamp Lumens 6,300
Fixture Efficiency 68%

Report No.
P10568A

Coefficients of Utilization
Vandal Proof 2 Lamp, 40W Fluorescent VPS6762/120/EG

Ceiling Refl.	80%			50%			10%		
Wall Refl.	50	30	10	50	30	10	50	30	10
RCR	20% Effective Floor Cavity Reflectance								
1	.63	.60	.57	.56	.54	.52	.49	.48	.46
2	.54	.49	.45	.48	.45	.42	.42	.40	.38
3	.47	.41	.37	.42	.38	.34	.37	.34	.31
4	.41	.35	.30	.37	.32	.29	.33	.29	.26
5	.37	.30	.26	.33	.28	.24	.29	.26	.23
6	.33	.27	.22	.30	.25	.21	.27	.23	.20
7	.30	.24	.19	.27	.22	.18	.24	.20	.17
8	.27	.21	.17	.25	.20	.16	.22	.18	.15
9	.25	.19	.15	.23	.18	.14	.20	.17	.14
10	.23	.17	.14	.21	.16	.13	.19	.15	.12

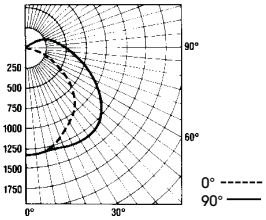

S/MH Ratio 1.4:1
Total Lamp Lumens 6,300
Fixture Efficiency 65%

Report No.
P10663

Dimensions

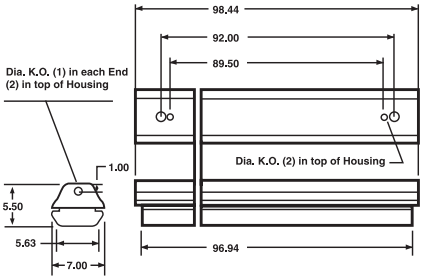

QUICK CHAIN MOUNTING "/QCH"

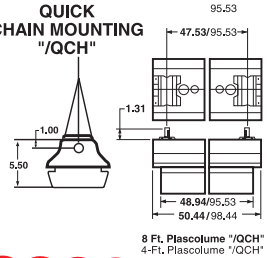

ADJUSTABLE MOUNTING BRACKETS "/AMB"

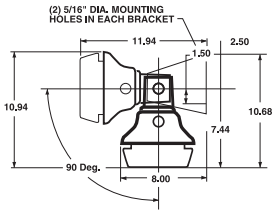

PIPE MOUNTING "/PI"

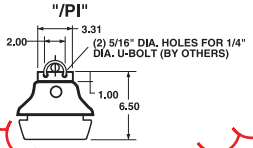

CHAIN MOUNTING BRACKETS "/CH"

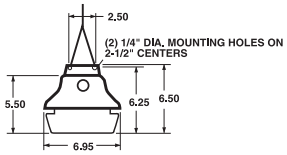

WALLMOUNT "/MB90"

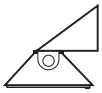

Plascolume Catalog Numbers

ACS67 - 82 - 120 - EB

VOLTAGE
120
277

TYPE
ACS77 - Hazardous Location
ACS67 - Wet Location
VPS67* - Vandal Proof/Wet Location

LAMPS/SIZE

4 FOOT
60 - 1-F40 T12
62 - 2-F40 T12
64 - 1-F48 T12/HO
65 - 2-F48 T12/HO
80 - 1-F32 T8
82 - 2-F32 T8

8 FOOT
63 - 4-F40 T12
66 - 1-F96 T12/HO
67 - 2-F96 T12/HO
83 - 4-F32 T8
86 - 1-F96 T8/HO
87 - 2-F96 T8/HO
88 - 1-F96 T8
89 - 2-F96 T8

* 4' only.

Options

"/FF" - Fast Acting Fixture Fuse, Buss GLR
"/SFF" - Slow Blow (Fusetron) Fuse, Buss GMF
"/0°" - 0° operation on 430MA ballast
"/ES" - Energy Saving Ballast on 800MA Unit (8' unit only)
"/EB" - For Electronic Ballast
"/CH" - Stainless Steel Chain Mounting Brackets (one pair)
"/AMB" - Stainless Steel Adjustable Mounting Brackets (one pair)*
"/PI" - Pipe Mounting (PIPE NOT SUPPLIED)
"/SH" - 3/4" Stainless Steel Hub
"/AH" -3/4" Cast Aluminum Hub
"/QCH" - Stainless Steel Quick Chain Mounting
"/MB90" - Wall Mount

*HAZARDOUS LOCATIONS FIXTURE APPROVED FOR CONDUIT, CHAIN BRACKET PIPE AND WALL MOUNTING ONLY.

Guth utilized the services of U.L. and ETL for listing products.
Specifications and data are subject to change without notice.

OCTRON® 800 ECOLOGIC®

Fluorescent Lamps

OCTRON 800 ECOLOGIC T8 lamps offer a high quality solution for general purpose fluorescent lighting applications where color is important. These lamps are available in a wide range of color temperatures: 3000K, 3500K, 4100K and 5000K that feature improved color rendering and lumen maintenance when compared to 700 series lamps. When paired with QUICKTRONIC electronic ballasts, these systems are a good alternative to T12 fluorescent systems and are covered by the comprehensive QUICK 60+ system warranty.

Key Features & Benefits

- Passes Federal TCLP test*
- Energy efficient T8 lamp
- Made in the USA
- Lead free
- RoHS compliant
- Compatible with QUICKTRONIC® electronic ballasts
- QUICK 60+® System Warranty

ECOLOGIC® is a comprehensive program of OSRAM SYLVANIA focused on addressing environmental issues at all stages of lamp life.

* Regulations may vary. Check your local and state regulations.

RoHS compliant
This light source meets restrictions on hazardous substances.

MADE IN USA

LEAD-FREE

ECOLOGIC®

Product Offering

Ordering Abbreviation	Wattage	Lumens	CRI
F017/800/ECO	17	1350	82
F025/800/ECO	25	2150	82
F032/800/ECO	32	2950	85
F040/800/ECO	40	3650	82
F096/800/ECO	96	5900	82

Application Information

Applications

- Cove
- Recessed troffer
- Strip light fixture
- Valance

Application Notes

1. Lamps starting down to -20°F (dependent on ballast)
2. Operation below 50°F may affect lumen output or lamp operation.
3. For cold temperature applications, use in enclosed fixture or use tube to maximize lamp performance.
4. For rapid start operation, check with ballast manufacturer for ground plane requirement.
5. For maximum energy savings, operate on electronic instant start ballast.

Ordering Information

Item Number	Ordering Abbreviation	Nominal Length	Initial Lumens	Mean Lumens[1]	Rated Life: Instant Start 3 hrs/ start	Rated Life: Instant Start 12 hrs/ start	Rated Life: Programmed Rapid Start 3 hrs/ start	Rated Life: Programmed Rapid Start 12 hrs/ start	CCT	CRI
22135	F017/830/ECO	24	1,350	1,269	24,000	28,000	30,000	36,000	3000K	82
22136	F017/835/ECO	24	1,350	1,269	24,000	28,000	30,000	36,000	3500K	82
22137	F017/841/ECO	24	1,350	1,269	24,000	28,000	30,000	36,000	4100K	82
22138	F025/830/ECO	36	2,150	2,021	24,000	28,000	30,000	36,000	3000K	82
22139	F025/835/ECO	36	2,150	2,021	24,000	28,000	30,000	36,000	3500K	82
22140	F025/841/ECO	36	2,150	2,021	24,000	28,000	30,000	36,000	4100K	82
21777	F032/830/ECO	48	2,950	2,773	24,000	28,000	30,000	36,000	3000K	85
21779	F032/835/ECO	48	2,950	2,773	24,000	28,000	30,000	36,000	3500K	85
21781	F032/841/ECO	48	2,950	2,773	24,000	28,000	30,000	36,000	4100K	85
22143	F032/850/ECO	48	2,950	2,773	24,000	28,000	30,000	36,000	5000K	80
22144	F040/830/ECO	60	3,650	3,431	24,000	28,000	30,000	36,000	3000K	82
22145	F040/835/ECO	60	3,650	3,431	24,000	28,000	30,000	36,000	3500K	82
22146	F040/841/ECO	60	3,650	3,431	24,000	28,000	30,000	36,000	4100K	82
22147	F096/830/ECO	96	5,900	5,428	18,000	24,000			3000K	82
22148	F096/835/ECO	96	5,900	5,428	18,000	24,000			3500K	82
22149	F096/841/ECO	96	5,900	5,428	18,000	24,000			4100K	82
22173	F096/850/ECO	96	5,900	5,428	18,000	24,000			5000K	82

1. Mean lumens measured at 40% of rated life.

Ordering Guide

F0	32	/	8	35	/	ECO
Fluorescent OCTRON	Wattage: 17, 25, 32, 40 or 96 watts		8 = 80–85 CRI	30 = 3000K CCT 35 = 3500K CCT 41 = 4100K CCT 50 = 5000K CCT		ECOLOGIC

Technical Information

Typical Fluorescent Lamp Mortality

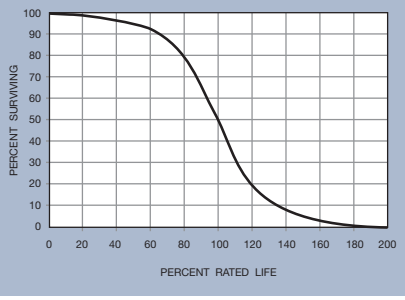

Related Literature

For maximum energy savings consider pairing with the following electronic ballast:

Ballast Technology Applications & Specification Guide (Literature Code: ECS-Electronic2009)

QUICK 60+® System Warranty (Literature Code: ECS140)

Specification Data

Catalog #

Type

Project

Comments

Prepared by

Date

Sample Specification

Lamp(s) shall be an OCTRON® ECOLOGIC® lamp(s) (F017/ECO, F025/ECO, F032/ECO, F040/ECO and F096/ECO) having medium bi-pin bases. Lamp(s) shall be designed to pass the Federal TCLP test in force at the time of manufacture. Lamp(s) shall have a correlated color temperature of (3000K, 3500K, 4100K or 5000K) and a CRI of (80, 82 or 85). The OCTRON lamp(s) shall be operated on dedicated QUICKTRONIC® ballast(s) with complete system warranty from one manufacturer covering lamp(s) and ballast(s).

United States
OSRAM SYLVANIA
100 Endicott Street
Danvers, MA 01923

Trade
Phone: 1-800-255-5042
Fax: 1-800-255-5043

National Accounts
Phone: 1-800-562-4671
Fax: 1-800-562-4674

OEM/Special Markets
Phone: 1-800-762-7191
Fax: 1-800-762-7192

Display/Optic
Phone: 1-888-677-2627
Fax: 1-800-762-7192

Canada
OSRAM SYLVANIA LTD.
2001 Drew Road
Mississauga, ON L5S 1S4

Trade
Phone: 1-800-263-2852
Fax: 1-800-667-6772

OEM/Special Markets/Display/Optic
Phone: 1-800-265-2852
Fax: 1-800-667-6772

www.sylvania.com

© 2010 OSRAM SYLVANIA 11/10 Photography © P.I.Corp

SYLVANIA is a registered trademark of OSRAM SYLVANIA Inc.
SEE THE WORLD IN A NEW LIGHT is a registered trademark of OSRAM SYLVANIA Inc.
OCTRON, ECOLOGIC and QUICK 60+ are registered trademarks of OSRAM SYLVANIA Inc.
QUICKTRONIC is a registered trademark of OSRAM GmbH.

Submitting Agency:	Description:	Type:
jcwrightlighting phone: 509-535-0098	**ACS67-82-120-EB/PI/BDL500** Project: **WWTP IMPVT'S WENATCHEE** Notes: GUTH	**GEM**

PLASCOLUME

Stainless Steel Fluorescent for Hazardous and Wet Applications

FEATURES
- High lumen package
- Stainless steel
- Prismatic DR acrylic lens
- 4 or 8 foot
- Hazardous or wet locations
- Low pressure hosedown

BENEFITS
- Corrosion resistant
- Excellent brightness control
- Resists abuse
- Requires less fixtures
- Toolless entry

APPLICATIONS
- Food processing
- Car wash
- Petrochemical plants
- Wastewater treatment
- Paper mills

Specifications/Features

GENERAL
- Remains leak-free when subjected to low pressure water washdown.
- Corrosion resistant stainless steel fixture.
- Fixture is listed to be installed in the 0° Nadir configuration, lens down.

CONSTRUCTION
- Housing formed entirely of 22 ga. 304 stainless with a mill (2B) finish.
- End caps riveted and silicone sealed to channel.
- Closed stainless steel rivets used exclusively to prevent leaks.
- Ballast mounted with weld studs to eliminate unnecessary penetrations of the housing.
- Supplied with 1/2" cast aluminum hubs. Optionall 3/4" and SS.

DOOR FRAME/LENS
- Lens extruded of 100% DR Virgin Acrylic with embossed prisms for brightness control.
- Lens is sealed against the housing with an extruded PVC gasket held in place with 304 Stainless C-channel which distributes the force of the clamps uniformly over the gasket.
- The lens frame is clamped to the body with six (ten on 8' housings) stainless "no tool" cam latches mounted to the housing with stainless closed rivets.
- Vandal resistant version uses polycarbonate lens.

One piece molded PVC gasket compression fit designed into 304 Stainless steel lens frame.

Stainless steel swivel latches secure lens and provide easy "toolless" access.

LISTINGS
- Listed "Wet Location, Covered Ceilings Only" with the HL version fixture listed "Hazardous Locations." Class I, Division 2, Groups A,B,C,D; Class II, Division 2, Group G; and Class III. Temperature code is T3C (40°C Ambient).
- Listed for use in Canada.

ELECTRICAL
- The 430MA ballast is energy saving Class P and appropriate to the lamp and voltage specified.
- In the 800MA versions the ballast is mounted to the body with aluminum heat radiators to prolong ballast life, and permit mounting.
- All fixtures carry the IBEW Union label to ensure quality.

Submitting Agency:	Description:	Type:
jcwrightlighting phone: 509-535-0098	**ACS67-82-120-EB/PI/BDL500** Project: **WWTP IMPVT'S WENATCHEE** Notes: GUTH	**GEM**

Photometrics

Coefficients of Utilization
Acrylic 2 Lamp, 40W Fluorescent ACS7762/120/HL

Ceiling Refl.	80%			50%			10%		
Wall Refl.	50	30	10	50	30	10	50	30	10
RCR	20% Effective Floor Cavity Reflectance								
1	.69	.66	.63	.63	.60	.58	.55	.54	.52
2	.61	.56	.53	.55	.52	.49	.49	.47	.45
3	.54	.49	.45	.50	.46	.43	.44	.42	.39
4	.48	.43	.39	.44	.40	.37	.40	.37	.34
5	.43	.38	.33	.40	.35	.32	.36	.32	.30
6	.39	.33	.29	.36	.32	.28	.33	.29	.26
7	.35	.30	.26	.33	.28	.24	.30	.26	.23
8	.32	.26	.22	.29	.25	.21	.27	.23	.20
9	.29	.23	.20	.27	.22	.19	.24	.21	.18
10	.25	.20	.16	.24	.19	.16	.21	.17	.15

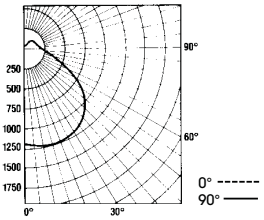

S/MH Ratio 1.3:1
Total Lamp Lumens 6,300
Fixture Efficiency 68%

Report No.
P10568A

Coefficients of Utilization
Vandal Proof 2 Lamp, 40W Fluorescent VPS6762/120/EG

Ceiling Refl.	80%			50%			10%		
Wall Refl.	50	30	10	50	30	10	50	30	10
RCR	20% Effective Floor Cavity Reflectance								
1	.63	.60	.57	.56	.54	.52	.49	.48	.46
2	.54	.49	.45	.48	.45	.42	.42	.40	.38
3	.47	.41	.37	.42	.38	.34	.37	.34	.31
4	.41	.35	.30	.37	.32	.29	.33	.29	.26
5	.37	.30	.26	.33	.28	.24	.29	.26	.23
6	.33	.27	.22	.30	.25	.21	.27	.23	.20
7	.30	.24	.19	.27	.22	.18	.24	.20	.17
8	.27	.21	.17	.25	.20	.16	.22	.18	.15
9	.25	.19	.15	.23	.18	.14	.20	.17	.14
10	.23	.17	.14	.21	.16	.13	.19	.15	.12

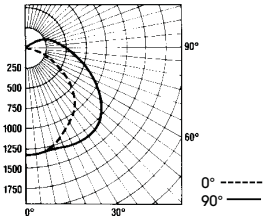

S/MH Ratio 1.4:1
Total Lamp Lumens 6,300
Fixture Efficiency 65%

Report No.
P10663

Dimensions

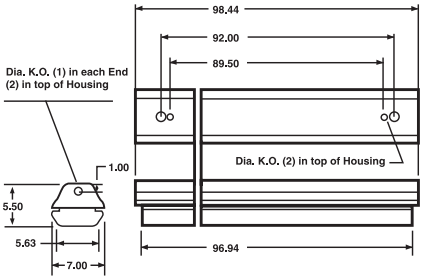

QUICK CHAIN MOUNTING "/QCH"

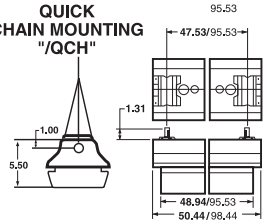

8 Ft. Plascolume "/QCH"
4-Ft. Plascolume "/QCH"

ADJUSTABLE MOUNTING BRACKETS "/AMB"

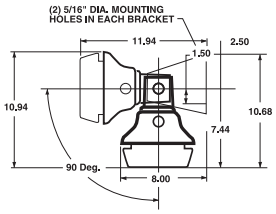

Plascolume Catalog Numbers

ACS67 - **82** - **120** - **EB**

VOLTAGE
120
277

TYPE
ACS77 - Hazardous Location
ACS67 - Wet Location
VPS67* - Vandal Proof/Wet Location

LAMPS/SIZE

4 FOOT
60 - 1-F40 T12
62 - 2-F40 T12
64 - 1-F48 T12/HO
65 - 2-F48 T12/HO
80 - 1-F32 T8
82 - 2-F32 T8

8 FOOT
63 - 4-F40 T12
66 - 1-F96 T12/HO
67 - 2-F96 T12/HO
83 - 4-F32 T8
86 - 1-F96 T8/HO
87 - 2-F96 T8/HO
88 - 1-F96 T8
89 - 2-F96 T8

* 4' only.

PIPE MOUNTING "/PI"

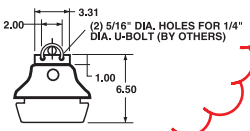

CHAIN MOUNTING BRACKETS "/CH"

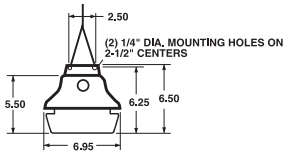

WALLMOUNT "/MB90"

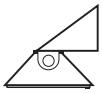

Options

"/FF" - Fast Acting Fixture Fuse, Buss GLR
"/SFF" - Slow Blow (Fusetron) Fuse, Buss GMF
"/0°" - 0° operation on 430MA ballast
"/ES" - Energy Saving Ballast on 800MA Unit (8' unit only)
"/EB" - For Electronic Ballast
"/CH" - Stainless Steel Chain Mounting Brackets (one pair)
"/AMB" - Stainless Steel Adjustable Mounting Brackets (one pair)*
"/PI" - Pipe Mounting (PIPE NOT SUPPLIED)
"/SH" - 3/4" Stainless Steel Hub
"/AH" -3/4" Cast Aluminum Hub
"/QCH" - Stainless Steel Quick Chain Mounting
"/MB90" - Wall Mount

*HAZARDOUS LOCATIONS FIXTURE APPROVED FOR CONDUIT, CHAIN BRACKET PIPE AND WALL MOUNTING ONLY.

Guth utilized the services of U.L. and ETL for listing products.
Specifications and data are subject to change without notice.

OCTRON® 800 ECOLOGIC®

Fluorescent Lamps

OCTRON 800 ECOLOGIC T8 lamps offer a high quality solution for general purpose fluorescent lighting applications where color is important. These lamps are available in a wide range of color temperatures: 3000K, 3500K, 4100K and 5000K that feature improved color rendering and lumen maintenance when compared to 700 series lamps. When paired with QUICKTRONIC electronic ballasts, these systems are a good alternative to T12 fluorescent systems and are covered by the comprehensive QUICK 60+ system warranty.

Key Features & Benefits

- Passes Federal TCLP test*
- Energy efficient T8 lamp
- Made in the USA
- Lead free
- RoHS compliant
- Compatible with QUICKTRONIC® electronic ballasts
- QUICK 60+® System Warranty

ECOLOGIC® is a comprehensive program of OSRAM SYLVANIA focused on addressing environmental issues at all stages of lamp life.

* Regulations may vary. Check your local and state regulations.

RoHS compliant
This light source meets restrictions on hazardous substances.

MADE IN USA

LEAD-FREE

ECOLOGIC®

Product Offering

Ordering Abbreviation	Wattage	Lumens	CRI
F017/800/ECO	17	1350	82
F025/800/ECO	25	2150	82
F032/800/ECO	32	2950	85
F040/800/ECO	40	3650	82
F096/800/ECO	96	5900	82

Application Information

Applications

- Cove
- Recessed troffer
- Strip light fixture
- Valance

Application Notes

1. Lamps starting down to -20°F (dependent on ballast)
2. Operation below 50°F may affect lumen output or lamp operation.
3. For cold temperature applications, use in enclosed fixture or use tube to maximize lamp performance.
4. For rapid start operation, check with ballast manufacturer for ground plane requirement.
5. For maximum energy savings, operate on electronic instant start ballast.

Ordering Information

Item Number	Ordering Abbreviation	Nominal Length	Initial Lumens	Mean Lumens[1]	Rated Life: Instant Start 3 hrs/ start	Rated Life: Instant Start 12 hrs/ start	Rated Life: Programmed Rapid Start 3 hrs/ start	Rated Life: Programmed Rapid Start 12 hrs/ start	CCT	CRI
22135	F017/830/ECO	24	1,350	1,269	24,000	28,000	30,000	36,000	3000K	82
22136	F017/835/ECO	24	1,350	1,269	24,000	28,000	30,000	36,000	3500K	82
22137	F017/841/ECO	24	1,350	1,269	24,000	28,000	30,000	36,000	4100K	82
22138	F025/830/ECO	36	2,150	2,021	24,000	28,000	30,000	36,000	3000K	82
22139	F025/835/ECO	36	2,150	2,021	24,000	28,000	30,000	36,000	3500K	82
22140	F025/841/ECO	36	2,150	2,021	24,000	28,000	30,000	36,000	4100K	82
21777	F032/830/ECO	48	2,950	2,773	24,000	28,000	30,000	36,000	3000K	85
21779	F032/835/ECO	48	2,950	2,773	24,000	28,000	30,000	36,000	3500K	85
21781	F032/841/ECO	48	2,950	2,773	24,000	28,000	30,000	36,000	4100K	85
22143	F032/850/ECO	48	2,950	2,773	24,000	28,000	30,000	36,000	5000K	80
22144	F040/830/ECO	60	3,650	3,431	24,000	28,000	30,000	36,000	3000K	82
22145	F040/835/ECO	60	3,650	3,431	24,000	28,000	30,000	36,000	3500K	82
22146	F040/841/ECO	60	3,650	3,431	24,000	28,000	30,000	36,000	4100K	82
22147	F096/830/ECO	96	5,900	5,428	18,000	24,000			3000K	82
22148	F096/835/ECO	96	5,900	5,428	18,000	24,000			3500K	82
22149	F096/841/ECO	96	5,900	5,428	18,000	24,000			4100K	82
22173	F096/850/ECO	96	5,900	5,428	18,000	24,000			5000K	82

1. Mean lumens measured at 40% of rated life.

Ordering Guide

F0	32	/	8	35	/	ECO
Fluorescent OCTRON	Wattage: 17, 25, 32, 40 or 96 watts		8 = 80–85 CRI	30 = 3000K CCT 35 = 3500K CCT 41 = 4100K CCT 50 = 5000K CCT		ECOLOGIC

Technical Information

Typical Fluorescent Lamp Mortality

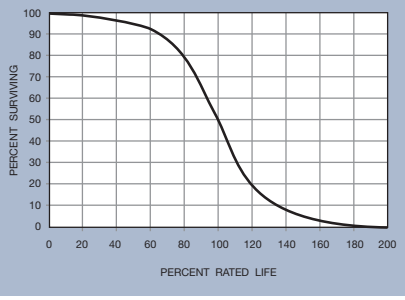

Related Literature

For maximum energy savings consider pairing with the following electronic ballast:

Ballast Technology Applications & Specification Guide (Literature Code: ECS-Electronic2009)

QUICK 60+® System Warranty (Literature Code: ECS140)

Specification Data

Catalog #

Type

Project

Comments

Prepared by

Date

Sample Specification

Lamp(s) shall be an OCTRON® ECOLOGIC® lamp(s) (F017/ECO, F025/ECO, F032/ECO, F040/ECO and F096/ECO) having medium bi-pin bases. Lamp(s) shall be designed to pass the Federal TCLP test in force at the time of manufacture. Lamp(s) shall have a correlated color temperature of (3000K, 3500K, 4100K or 5000K) and a CRI of (80, 82 or 85). The OCTRON lamp(s) shall be operated on dedicated QUICKTRONIC® ballast(s) with complete system warranty from one manufacturer covering lamp(s) and ballast(s).

United States
OSRAM SYLVANIA
100 Endicott Street
Danvers, MA 01923

Trade
Phone: 1-800-255-5042
Fax: 1-800-255-5043

National Accounts
Phone: 1-800-562-4671
Fax: 1-800-562-4674

OEM/Special Markets
Phone: 1-800-762-7191
Fax: 1-800-762-7192

Display/Optic
Phone: 1-888-677-2627
Fax: 1-800-762-7192

Canada
OSRAM SYLVANIA LTD.
2001 Drew Road
Mississauga, ON L5S 1S4

Trade
Phone: 1-800-263-2852
Fax: 1-800-667-6772

OEM/Special Markets/Display/Optic
Phone: 1-800-265-2852
Fax: 1-800-667-6772

www.sylvania.com

© 2010 OSRAM SYLVANIA 11/10 Photography © P.I.Corp

SYLVANIA is a registered trademark of OSRAM SYLVANIA Inc.
SEE THE WORLD IN A NEW LIGHT is a registered trademark of OSRAM SYLVANIA Inc.
OCTRON, ECOLOGIC and QUICK 60+ are registered trademarks of OSRAM SYLVANIA Inc.
QUICKTRONIC is a registered trademark of OSRAM GmbH.

Submitting Agency:	Description: DXLN2GW Project: WWTP IMPVT'S WENATCHEE Notes: LIGHTGUARD	Type:
jcwrightlighting phone: 509-535-0098		K

Type No. _____

Job Name _____

Catalog No. _____

LightGuard

Shown: DXLN1RWSC

DX Series

- Specification Grade Die Cast Aluminum Exit Signs
- AC Only and Self-Powered
- Standard Self-Diagnostics Electronics*
- LED Illumination

Housing

- Frame and stencil face constructed of die cast aluminum alloy
- Choose from black or white frame with brushed aluminum stencil face, black frame with black stencil face, white frame with white stencil face, or brushed aluminum frame and stencil face
- Stencil door includes field selectable chevrons
- Hinged stencil door for easy access
- Universal knockouts located on rear allow for wall mounting directly to standard junction boxes
- Self-contained and requires no canopy for back mounted configuration

Battery

- Maintenance free, sealed nickel cadmium battery has an expected life up to 10 years with an operating range of 32°F (0°C) to 104°F (40°C)
- Nickel cadmium batteries are ideal for high ambient temperature areas

Illumination

- Normal and emergency illumination is accomplished with long lasting, high output Light Emitting Diodes (LEDs)
- Hot spots and striations are eliminated by the internal "light chamber" especially designed around the high performance LED array
- Average illumination levels are in excess of 25fl (79 cd/m^2)

Operating Temperature Range

- AC-Only Models: -40°F (-40°C) to 113°F (45°C)
- Self-Powered Models - Standard Location: 65°F (19°C) to 85°F (30°C)
- Self-Powered Models - Damp Location: 32°F (0°C) to 104°F (40°C)

Application

- Ideal for commercial locations where an attractive, highly reliable and easily installed exit sign with low power consumption is desired
- The DX Series meets the Buy American requirements

*Self-powered models incorporate the Smart Charger diagnostics electronics package. Self-testing is a factory installed option.

Electronics

AC Only

- 120/277 VAC dual voltage input with surge protection

Emergency Operation

- Microprocessor driven charger software with routine embedded diagnostic and temperature compensation
- See specification sheet L2465 for electronics details
- 120/277 VAC input, surge protection, brownout, AC lockout and low voltage disconnect are standard

Electrical Specifications

AC Only

Red - 3.8 Watts (120 VAC), PF = 0.96
- 3.8 Watts (277 VAC), PF = 0.91

Green - 4.0 Watts (120 VAC), PF = 0.95
- 4.0 Watts (277 VAC), PF = 0.90

Self-Powered

Red - 4.7 Watts (120 VAC), PF = 0.95
- 4.8 Watts (277 VAC), PF = 0.97

Green - 4.7 Watts (120 VAC), PF = 0.95
- 4.7 Watts (277 VAC), PF = 0.99

Smart Charger Self-Testing Diagnostics (optional)

- The Smart Charger diagnostic/charging platform with self-testing mode automatically runs a one-minute self-test every 30 days and a 30-minute test on the sixth and twelfth month. A one-minute or 90-minute test may be initiated via the push to test switch on the unit or by activating the appropriate test command on the optional IR test device.

Code Compliance

- UL 924 listed
- UL Damp Location Listing optional
- NFPA 101, NEC, BOCA, OSHA and IBC illumination standards
- NEMA Premium certified
- Certified to the California Energy Commission in accordance with Califiornia law
- IEC 61951-1 Life Testing (batteries)

Warranty

- Electronics: 5 years, Battery: 5 years full, 5 years pro-rata

Submitting Agency:	Description: DXLN2GW Project: WWTP IMPVT'S WENATCHEE Notes: LIGHTGUARD	Type: K
jcwrightlighting phone: 509-535-0098		

DX Series

Ordering Information

DX	L	N	2	G	W	SC	
SERIES	**LAMP TYPE**	**BATTERY**	**STENCIL FACES**	**LETTER COLOR**	**STENCIL FACE/ HOUSING COLOR**	**MODEL DESIGNATOR**	**FACTORY INSTALLED OPTIONS** [1]
DX = DX Series Classic Die Cast Exit	**L** = LED Only	**N** = Nickel Cadmium **A** = AC	**1** = Single **2** = Double	**R** = Red **G** = Green	**A** = Natural Brushed Aluminum Face w/ Black Housing **B** = Black Stencil Face w/ Black Housing **N** = Natural Brushed Aluminum Face w/ Natural Brushed **W** = White Stencil Face w/ White Housing **WA** = Natural Brushed Aluminum Face w/ White Housing	**SC** = Smart Charger Diagnostics	**2CKT1** = 120 VAC Two Circuit Wiring **2CKT2** = 277 VAC Two Circuit Wiring **BF** = Buzzer/Flasher (emergency units only) **BZ** = Buzzer (emergency units only) **DC** = 12-48 VDC Input Power (AC only models) **DL** = Damp Location Listing **EX** = Special Input Transformer (specify voltage and frequency) **FA** = 24 VDC Fire Alarm Interface (regulated constant DC voltage) **FL** = Flasher (emergency units only) **PM** = Pendant Mount Only (must order pendant kit accessory) [2] **SW** = Special Wording/Graphics [3] **T** = Self-Testing Diagnostics (non-audible) **TA** = Audible Self-Testing Diagnostics **TP** = Tamperproof **VRS** = Vandal Resistant Lens with Tamperproof Hardware

NOTES:
1) Some option combinations may impact UL listing. Consult factory for specifics.
2) Must specify "PM" option for compatibility with pendant kit.
3) Utilizes larger housing - 13.5 x 8.5 x 2.5

ACCESSORIES
(Ordered Separately)

DXKIT12B = 12" Pendant Kit, Black [3]
DXKIT12W = 12" Pendant Kit, White [3]
SCIR = Smart Charger Infra-Red Remote
T15TPTOOL = Tamperproof Screwdriver
PVS = Polycarbonate Vandal Shield
WG4 = Wire Guard
WG10 = Wire Guard for Side Mounting

Ordering Example

DX L N 1 R W SC DL

- Series
- Lamp Type
- Battery
- Stencil Faces
- Letter Color
- Stencil Face/Housing Color
- Model Designator
- Factory Installed Options

Dimensions

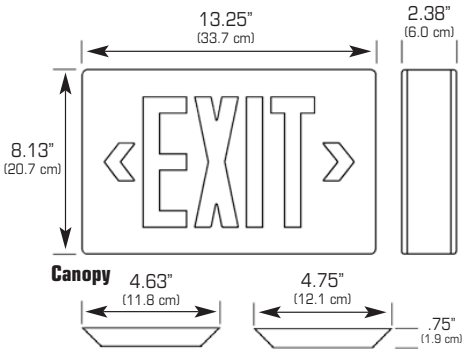

Dimensions are approximate and subject to change.

Suggested Specification

Furnish and install LightGuard's LED exit sign model _____. The exit shall be constructed to meet Underwriter's Laboratories, Inc. Standard #924 and the National Electrical Code (NEC).

INSTALLATION AND OPERATION - Exit shall be easily field connected to a 120 or 277 VAC, 60 hertz, unswitched power source. Installation must comply with the NEC as well as other applicable codes. (Self-Powered Only) - Upon utility power failure or brownout, the unit shall automatically transfer to battery power and maintain the required illumination level for a minimum period of 90 minutes. Upon restoration of utility power, the charger shall restore the battery to full charge within UL 924 requirements following a rated discharge of not more than 90 minutes.

ELECTRONICS AC-Only Models - The DX Series exit sign shall be easily field connected to 120 or 277 VAC, 60 HZ un-switched power source. The DX Series exit sign equipped with red LED's shall consume 3.8 watts with a power factor of 0.96 (120 VAC) and 3.8 watts with a power factor of 0.91 (277 VAC). The DX Series exit sign equipped with green LED's shall consume 4.0 watts with a power factor of 0.95 (120 VAC) and 4.0 watts with a power factor of 0.90 (277 VAC). Available, factory-installed options shall include a two-circuit module to accommodate 120/120 or 277/277 VAC for use with a generator or central inverter system; a fire alarm activated flasher option to accommodate an input from a fire alarm panel and provide a flashing rate when the alarm system is activated.

Self-Powered Models - All self-powered models shall be provided with LightGuard's Smart Charger diagnostics electronics platform. The exit sign shall be easily field connected to 120 or 277 VAC, 60 HZ un-switched power source. Smart Charger will detect and notify the installer regarding incorrect wiring of the transformer primary and restrict the damaging effects from affecting the printed circuit board. The DX Series exit sign equipped with red LED's shall consume 4.7 watts with a power factor of 0.95 (120 VAC) and 4.8 watts with a power factor of 0.97 (277 VAC). The DX Series exit sign equipped with green LED's shall consume 4.7 watts with a power factor of 0.95 (120 VAC) and 4.7 watts with a power factor of 0.99 (277 VAC). The Smart Charger electronics package shall provide continuous, real-time monitoring of all the critical equipment functions including, but not limited to: line voltage status and condition, charger fault, transfer fault, battery fault, and LED load fault and notify personnel with a visual indicator sequence. Optional audible diagnostics as well as self-testing diagnostics shall be available from the factory. The self-testing option shall satisfy the periodic testing requirements in NFPA 101, Life Safety Code as well as the International Building Code (IBC). The Smart Charger circuit shall continuously sample ambient temperature conditions and adjust the charging regime to compensate for typical and dramatic ambient conditions to maximize the life of the battery. An on-board IR receiver shall be standard and pre-programmed to operate from an optional IR user interface device (available as an accessory item).

BATTERY (Self-Powered Only) - The battery shall be maintenance free, sealed nickel cadmium utilizing sintered plate construction and polypropylene separators for trouble-free operation in ambient temperatures up to 104°F (40°C). Nickel cadmium batteries are supplied with a five year warranty and comply with IEC 61951-1.

ILLUMINATION - The DX Series indirect view LED exit signs shall incorporate high intensity LEDs. The LEDs shall be designed so that the unlikely failure of one LED will not affect the integrity of the total sign in the emergency mode.

ENCLOSURE - The exit sign housing shall be constructed of heavy duty die cast aluminum. The final housing finish shall be an epoxy-based powder coat paint. The exit stencil face shall be constructed of the same aluminum alloy and will be completed with a brushed finish or matching paint. Chevron direction shall be field selectable, and if left in place will not disturb the visual line of the exit face.

ALL SPECIFICATIONS SUBJECT TO CHANGE WITHOUT NOTICE

ISO 9001 AMERICAN GLOBAL STANDARDS CERTIFIED

LightGuard

272 West Stag Park Service Road • Burgaw, NC 28425
(910) 259-1131 • FAX (800) 403-6927
www.lightguard.com

Submitting Agency:	Description:	Type:
jcwrightlighting phone: 509-535-0098	**WFL2 150M RM 120 LPI PE BVG DBL SCWA** Project: **WWTP IMPVT'S WENATCHEE** Notes:	**L**

LITHONIA LIGHTING®

Catalog Number	
Notes	
Type	

FEATURES & SPECIFICATIONS

INTENDED USE — Use for building- and wall-mounted applications.

CONSTRUCTION — Extruded aluminum body with cast end caps is mounted with 1/4" bolts, to formed steel wall bracket. Housing body rotates to allow for variable aiming. Cast aluminum doorframe is hinged and secured by stainless steel fasteners. Closed-cell silicone gasket prevents the penetration of dust and moisture.

FINISH: Standard finish is dark bronze (DDB) corrosion-resistant polyester powder finish with other architectural colors available.

OPTICAL — Centered optics with anodized, aluminum reflectors: segmented, specular or hammertone finish. Clear, impact-resistant, tempered glass lens with silkscreen.

ELECTRICAL — Ballast: 150W and below utilizes a high-reactance, high power factor ballast and utilizes pulse start ignitor technology. 175W and above utilizes a constant-wattage autotransformer ballast. CSA, NOM or INTL required for probe start shipments outside of the US for 175M. Ceramic metal halide lamps are recommended for use in applications where superior color rendition, lumen maintenance and longer lamp life are desired. Ballasts are 100% factory-tested.

Socket: Horizontal, medium-base porcelain socket with copper alloy, nickel-plated screw shell and center contact. 4KV pulse rated. UL listed 660W, 600V.

INSTALLATION — Mounting plate includes provision for attachment independent of junction box. Optional backbox wall mounting available for surface conduit applications. Mounts either lens-up or lens-down.

LISTINGS — UL listed for wet locations and 25°C ambient. Listed and labeled to comply with US and Canadian safery standards (see Options). IP65 rated.

Note: Specifications subject to change without notice.

Architectural Wall-Mounted Lighting

WFL2

METAL HALIDE 70-175W
HIGH PRESSURE SODIUM 70-150W

Specifications

EPA: 1.3 ft² (.12 m²)

Length: 18-1/2 (47)

Depth: 6-3/4 (17.2)

Overall Height: 11-3/4 (29.9)

*Weight: 25lbs (11.34kg)

All dimensions are inches (centimeters) unless otherwise specified.

*Weight as configured in example below.

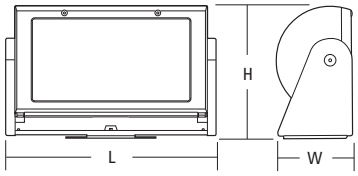

ORDERINGINFORMATION For shortest lead times, configure product using **standard options (shown in bold).**

Example: WFL2 100M FT TB LPI

WFL2	150M	RM	120			PE BVG	DBL	LPI
Series	**Wattage**	**Distribution**	**Voltage**	**Ballast**	**Mounting**	**Options**	**Finish**[10]	**Lamp**[11]
WFL2	Metal halide **70M** **100M** **150M** 175M[1] Ceramic metal halide 70MHC 100MHC 150MHC High pressure sodium 70S 100S 150S	SP Spot **BP** Bi-peak symmetric HPN Narrow asymmetric HPM Medium asymmetric **HPW** Wide asymmetric RN Narrow symmetric RM Medium symmetric **RW** Wide symmetric GZ Wall grazing **FT** Forward throw	**120** 208[2] 240[2] **277** **347** 480[2] **TB**[3] 2305HZ[4]	**(blank)** Magnetic ballast CWI Constant wattage isolated Pulse Start SCWA Super CWA pulse start ballast[5] Note: For shipments to U.S. territories, Scwa must be specified to comply with EISA.	**(blank)** Surface mount Shipped separately[6,7] BBW Back box wall mounting	Shipped installed in fixture SF Single fuse (120, 277, 347V) DF Double fuse (208, 240, 480V) **CSA** Listed an labeled to comply with Canadian Standards INTL International shipment for 175M PE Photoelectric cell-button type[8] LC90 Lock at 90° for cutoff Shipped separately[6, 9] UV Upper visor[7] EV Eggcrate visor (black)[7] FV Full visor[7] BV Bottom visor[7] WG Wire guard BD Barn door[7] HLV Horizontal louver (black) VLV Vertical louver (black) BVG Bubble vandal guard[7]	**(blank)** Dark bronze **DWH** White **DBL** Black DMB Medium bronze **DNA** Natural aluminum DSS Sandstone DGC Charcoal gray CR Enhanced corrosion resistant	**LPI** Lamp included **L/LP** Less lamp

Notes

1 These wattages do not comply with California Title 20 regulations.
2 Must specify CWI for use in Canada.
3 Optional multi-tap ballast (120, 208, 240, 277V). In Canada 120, 277, 347V; ships as 120V/347V.
4 Consult factory for available wattages.
5 Only available with 150M and 150MHC.
6 May be ordered as an accessory.
7 Must specify finish when ordered as an accessory.
8 Not available with 480V or TB. Must specify voltage.
9 Requires field modification when ordered as an accessory.
10 See www.lithonia.com/archcolors for additional color options.
11 .Must be specified. L/LP not available with MHC.

Submitting Agency:	Description:	Type:
jcwrightlighting phone: 509-535-0098	**WFL2 150M RM 120 LPI PE BVG DBL SCWA** Project: **WWTP IMPVT'S WENATCHEE** Notes:	**L**

WFL2 Metal Halide Architectural Wall-Mounted Lighting

WFL2 150 MHC FT

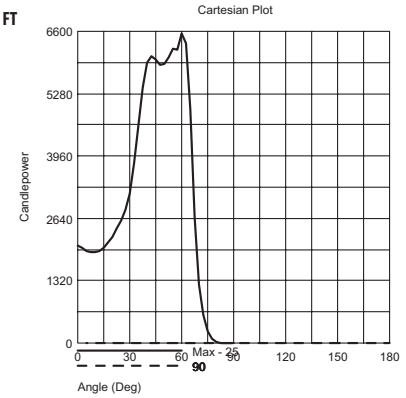

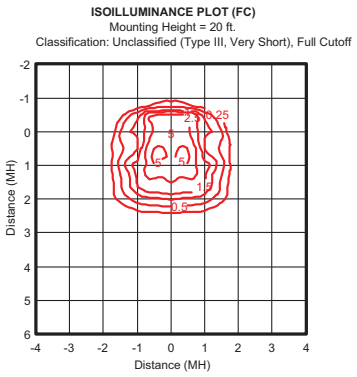

WFL2 150 MHC GZ

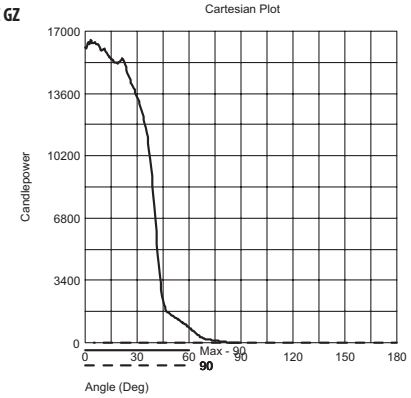

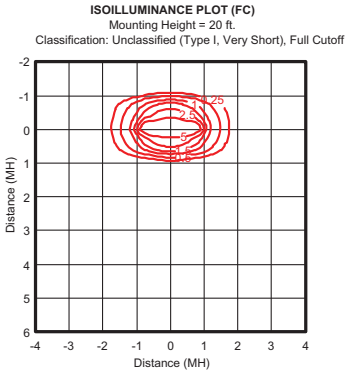

Luminaire/lamp	Iso-Illuminance Contour	Cartesian Plot	Max. to Min. Uniformity

WFL2 150S FT
Test No.
LTL8588
15800 Lumens

10% Maximum
99° H x 105° V

50% Maximum
76° H x 40° V

Tilt = 45°

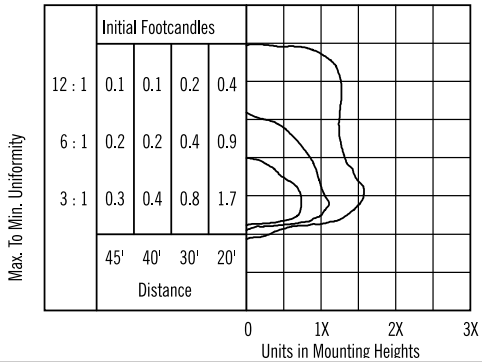

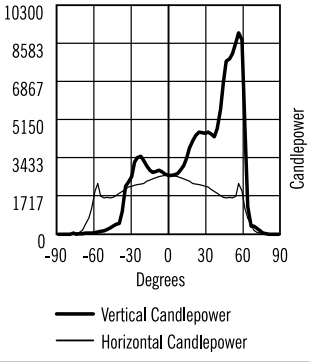

	D	Avg	Max	S	H	V
3 to 1	20	3.2	5.4	33	15	4
	30	1.4	2.4	49	23	5
	40	0.8	1.4	65	30	7
	45	0.6	1.1	73	34	8
6 to 1	20	4.3	9.4	9	30	2
	30	1.9	4.2	13	45	3
	40	1.1	2.4	17	60	4
	45	0.8	1.9	19	68	5

WFL2 150S GZ
Test No.
LTL8592
15800 Lumens

10% Maximum
97° H x 23° V

50% Maximum
82° H x 8° V

Tilt = 45°

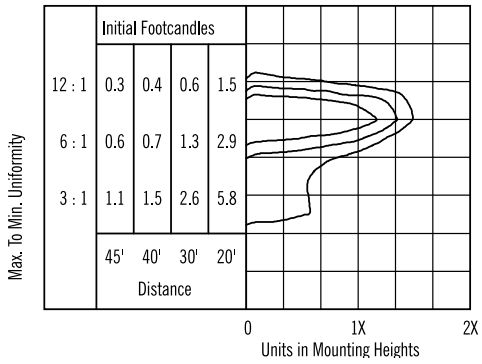

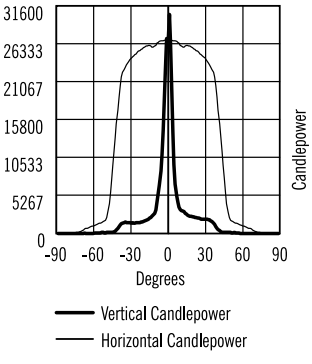

	D	Avg	Max	S	H	V
3 to 1	20	11.5	17.6	42	6	17
	30	5.1	7.8	62	9	26
	40	2.9	4.4	83	12	34
	45	2.3	3.5	93	14	38
6 to 1	20	19.4	34.5	3	11	14
	30	8.6	15.3	4	16	21
	40	4.9	8.6	5	21	28
	45	3.8	6.8	6	24	32

OUTDOOR: One Lithonia Way Conyers, GA 30012 Phone: 770.922.9000 Fax: 770-918-1209 www.lithonia.com

©2000-2010 Acuity Brands Lighting, Inc. All rights reserved. Rev. 12/1/10

Job: **Wenatchee Waste Water Treatment Plant**
Type: Undesignated
Notes: To replace existing sidewalk lights

Form 10 Square LED

EH / H / Arm Mount

The Philips Gardco arm mounted Square Form 10 LED products are cutoff luminaires featuring LED arrays. Square Form 10 LED luminaires provide performance excellence and advanced Philips Gardco LED thermal management technology. High performance Class 1 LED systems offer the potential for energy savings up to 50 % when compared to HID systems. The EH units are manufactured from mitered extruded aluminum and finished in an Architectural Class 1 anodizing. The H style luminaires are die formed aluminum with a thermoset polyester finish. Form 10 Square LED luminaires provide full cutoff performance and feature a flat glass lens.

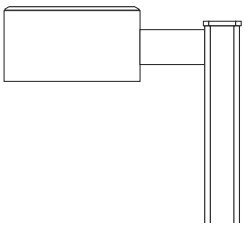

PREFIX	MOUNTING	DISTRIBUTION	LED WATTAGE	LED SELECTION	VOLTAGE	FINISH	OPTIONS
EH19L	1	4	160LA	NW	UNIV	BRA	

Enter the order code into the appropriate box above. Note: Philips Gardco reserves the right to refuse a configuration. Not all combinations and configurations are valid. Refer to notes below for exclusions and limitations. For questions or concerns, please consult the factory.

PREFIX

Available in 70LA and 85LA LED Wattages Only

EH14L	14" Square Extruded Luminaire LED - Constant Wattage
EH14L-DIM	14" Square Extruded Luminaire LED - 0-10V Dimming
H14L	14" Square Fabricated Luminaire LED - Constant Wattage
H14L-DIM	14" Square Fabricated Luminaire LED - 0-10V Dimming

Available in 110LA and 160LA LED Wattages Only

EH19L	19" Square Extruded Luminaire LED - Constant Wattage
EH19L-DIM	19" Square Extruded Luminaire LED - 0-10V Dimming
H19L	19" Square Fabricated Luminaire LED - Constant Wattage
H19L-DIM	19" Square Fabricated Luminaire LED - 0-10V Dimming

Retrofit Kits for existing Form 10 Square 14" and 19" HID luminaires are available.
See Legacy LED Retrofit Kits Submittal Data Sheet (G200-21) for Retrofit Kit information.

MOUNTING

1	Single Pole Mount
2	Twin Pole Mount at 180°
2@90	Twin Pole Mount at 90°
3	3-way Pole Mount at 90°
3@120°	3-way Pole Mount at 120°
4	4-way Pole Mount

DISTRIBUTION

2	Type II
3	Type III
4	Type IV
5	Type V

Type II, Type III and Type IV optics are field rotatable. Type V optics feature unitized lens.

LED WATTAGE AND LUMEN VALUES

Ordering Code	Average System Watts[1]	LED Current (mA)	LED Selection	Luminaire Initial Absolute Lumens[2,3]			
				TYPE 2	TYPE 3	TYPE 4	TYPE 5
70LA	70	350	CW	6,517	6,735	6,568	6,438
			NW	5,938	6,124	5,989	5,874
85LA	85	350	CW	7,860	8,114	8,342	8,245
			NW	7,468	7,697	7,491	7,323
110LA	110	350	CW	9,535(s)	9,908(s)	9.641(s)	9,526(s)
			NW	8,911	9,260	9,010	8,903
160LA	160	530	CW	13,170(s)	13,698(s)	13,244(s)	13,180(s)
			NW	12,308	12,802	12,378	12,311

Basis of Lumen Data : *Photometric tests performed in compliance with IESNA LM-79, except where otherwise indicated.*

Notes:

1. Wattage may vary by +/- 8% due to LED manufacturer forward volt specification and ambient temperature. Wattage shown is average for 120V through 277V input. Actual wattage may vary by an additional +/- 10% due to actual input voltage.
2. Values shown are for luminaires without the HS external shield option. Tests are in process for luminaires with the HS option and WW luminaires. Contact Gardco.applications@philips.com if approximate estimates are required for design purposes.
3. LED arrays feature LEDs that provide from 100 to 130 lumens per watt when operated at 350 mA. Lumen values based on tests performed in compliance with IESNA LM-79.
(s) Marked values are scaled from NW tests on the same luminaire.

LED SELECTION

CW	Cool White - 5700°K - 75 CRI
NW	Neutral White - 4000°K - 70 CRI
WW	Warm White - 3000°K - 80 CRI

VOLTAGE

UNIV	120V through 277V, 50hz or 60hz
HVU	347V through 480V, 50hz or 60hz (High Voltage Universal)

1611 Clovis Barker Road, San Marcos, TX 78666
(800) 227-0758 (512) 753-1000 FAX: (512) 753-7855 sitelighting.com
© 2012 Koninklijke Philips Electronics N.V. All Rights Reserved.
Philips Gardco reserves the right to change materials or modify the design of its product without notification as part of the company's continuing product improvement program.

PHILIPS GARDCO

Form 10 Square LED

EH / H / Arm Mount

FINISH

EH Style

BRA	Bronze Anodized
BLA	Black Anodized
NA	Natural Anodized
OC	Optional Color Paint *Specify Optional Color or RAL ex: OC-LGP or OC-RAL7024.*
SC	Special Paint *Specify. Must supply color chip.*

H Style

BRP	Bronze Paint
BLP	Black Paint
OC	Optional Color Paint *Specify Optional Color or RAL ex: OC-LGP or OC-RAL7024.*
SC	Special Paint *Specify. Must supply color chip.*

OPTIONS

F[4]	Fusing In Head
LF	In-Line/In-Pole Fusing
PC[4]	Photocontrol and Receptacle
PCR	Photocontrol Receptacle only
MF	Mast Arm Fitter *Requires 2 3/8" OD mast arm.*
MU	10° Uptilt Bracket
AP[5]	Adjustable Knuckle - Square Pole Mount
PTF2	Pole Top Fitter - 2 3/8" - 3" Dia. Tenon
PTF3	Pole Top Fitter - 3" - 3 1/2" Dia. Tenon
PTF4	Pole Top Fitter - 3 1/2" - 4" Dia. Tenon
SPR[6]	Surge Protection for 120V through 277V Input meeting ANSI C62.41.2
SPRH[6]	Surge Protection for 347V through 480V Input meeting ANSI C62.41.2

4. Not available in 480V. Provide specific input voltage.
5. Only available with 1 way and 2 @ 180° mounting. Square pole mount only.
6. Not available with Fusing (F) option.

DIMENSIONS AND EPA

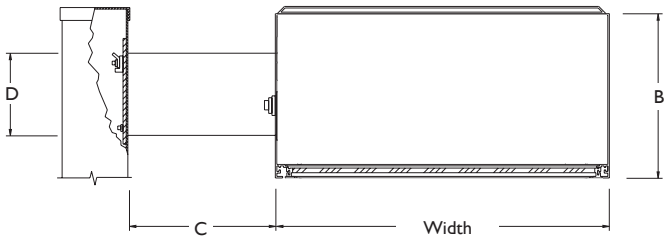

Size	Width	B	C	D
EH14	14" 35.56 cm	7" 17.78 cm	6" 15.24 cm	5" 12.70 cm
H14	14" 35.56 cm	7" 17.78 cm	6" 5.08 cm	5" 12.70 cm
EH19	19" 48.26 cm	10" 25.40 cm	9" 22.86 cm	5" 12.70 cm
H19	19" 48.26 cm	10" 25.40 cm	9" 5.08 cm	5" 12.70 cm

Size	Effective Projected Area (EPA)			Approximate Weight
	Single	Twin	3/4	Single
14"	1.1 ft^2 .10 m^2	2.3 ft^2 .21 m^2	2.9 ft^2 .27 m^2	30 lbs 13.61 kg
19"	2.1 ft^2 .20 m^2	4.0 ft^2 .37 m^2	5.5 ft^2 .51 m^2	55 lbs 24.95 kg

1611 Clovis Barker Road, San Marcos, TX 78666
(800) 227-0758 (512) 753-1000 FAX: (512) 753-7855 sitelighting.com
© 2012 Koninklijke Philips Electronics N.V. All Rights Reserved.
Philips Gardco reserves the right to change materials or modify the design of its product without notification as part of the company's continuing product improvement program.
G200-022/1012

PHILIPS
GARDCO

Form 10 Square LED

EH / H / Arm Mount

LUMINAIRE CONFIGURATION INFORMATION

CONSTANT WATTAGE CONFIGURATIONS: Standard LED luminaires provide constant wattage and constant light output when power to the luminaire is energized.

DIMMING "-DIM" CONFIGURATIONS: Dimmable LED luminaires are provided with 0 - 10V dimming for connection to a control system provided by others.

SPECIFICATIONS

GENERAL: The Philips Gardco arm mounted Square Form 10 LED products are cutoff luminaires featuring LED arrays. Square Form 10 LED luminaires provide performance excellence and advanced Philips Gardco LED thermal management technology. High performance Class 1 LED systems offer the potential for energy savings up to 50 % when compared to HID systems. The EH units are manufactured from mitered extruded aluminum and finished in an Architectural Class 1 anodizing. The H style luminaires are die formed aluminum with a thermoset polyester finish. Form 10 Square LED luminaires provide full cutoff performance and feature a flat glass lens.

HOUSING: Extruded housings (EH style) are composed of precisely mitered anodized aluminum extrusions. Fabricated (H style) units are one piece, multi-formed aluminum with an integral reinforcing spline and a single concealed joint. Pressure injected silicone provides a continuous weather tight seal at all miters and points of material transition.

ARM: Extruded aluminum arm is wired and secured to luminaire by contractor. Assembly is suitable for mounting to pole without requiring access to luminaire.

LENS: Mitered, extruded anodized aluminum door frame retains the optically clear, heat and impact resistant tempered flat glass in a sealed manner using hollow section, high compliance, memory retentive extruded silicone rubber. Concealed stainless steel latch and hinge permit easy toolless access to the luminaire.

THERMAL MANAGEMENT: The Philips Gardco Form 10 Square LED luminaires utilize extruded aluminum integral thermal radiation fins to provide the excellent thermal management so critical to long LED system life.

LED RELIABILITY:

PREDICTED LUMEN DEPRECIATION DATA		
Ambient Temperature °C	Driver mA	L_{70} Hours[7]
25 °C	350 mA	150,000
	530 mA	100,000
40 °C	350 mA	100,000
	530 mA	70,000

7. Predicted performance derived from LED manufacturer's data and engineering design estimates, based on IESNA LM-80 methodology. Actual experience may vary due to field application conditions. L_{70} is the predicted time when LED performance depreciates to 70% of initial lumen output.

OPTICAL SYSTEMS: Philips Gardco Form 10 Square LED luminaires utilize lensed LED arrays set to achieve IES Type II, Type III, Type IV and Type V distributions. Individual LED arrays are replaceable. Optical systems are field rotatable. Luminaires feature high performance Class 1 LED systems.

ELECTRICAL: Luminaires include a complete prewired LED driver assembly, provided as part of the optical assembly. Luminaires include an LED driver that accepts 120V through 277V, or 347V through 480V, 50hz to 60hz, input. Driver output is based on the LED wattage selected. Component-to-component wiring within the luminaire will carry no more than 80% of rated current and is listed by UL for use at 600 VAC at 302°F / 150°C or higher. Plug disconnects are listed by UL for use at 600 VAC, 15A or higher. Power factor is not less than 90%. Luminaires consume 0.0 watts in the off state.

FINISH: Extruded housings (EH style) are standard with natural, bronze, or black Aluminum Association Architectural Class I anodized finish. Special color polyester finishes are available. Formed housings (H style) are standard with a chromatic acid pretreatment. The finish coat is a thermosetting polyester baked at 450°F / 232°C to achieve an H-2H hardness measure. 2

LABELS: All luminaires bear UL or CUL (where applicable) Wet Location labels.

WARRANTY: Philips Gardco Form 10 Square LED luminaires feature a 5 year limited warranty, including a 5 year limited warranty covering LED arrays and LED drivers. See Warranty Information on www.sitelighting.com for complete details and exclusions.

FULL CUTOFF PERFORMANCE: Full cutoff performance means a luminaire distribution where zero candela intensity occurs at an angle at or above 90° above nadir . Additionally, the candela per 1000 lamp lumens does not numerically exceed 100 (10 percent) at a vertical angle of 80° above nadir. This applies to all lateral angles around the luminaire.

CUTOFF PERFORMANCE: Cutoff performance means a luminaire distribution where the candela per 1000 lamp lumens does not numerically exceed 25 (2.5 percent) at an angle at or above 90° above nadir, and 100 (10 percent) at a vertical angle of 80° above nadir. This applies to all lateral angles around the luminaire.

1611 Clovis Barker Road, San Marcos, TX 78666
(800) 227-0758 (512) 753-1000 FAX: (512) 753-7855 sitelighting.com
© 2012 Koninklijke Philips Electronics N.V. All Rights Reserved.
Philips Gardco reserves the right to change materials or modify the design of its product without notification as part of the company's continuing product improvement program.
G200-022/1012

PHILIPS
GARDCO

Job: **Wenatchee Waste Water Treatment Plant**
Type: Undesignated
Notes: To replace existing sidewalk lights

Poles

4" Straight Square Steel

The Philips Gardco SSS straight steel pole consists of a one-piece square fabricated steel lighting standard. The carbon steel base plate is secured to the shaft with a continuous circumferential weld providing excellent strength and integrity. The poles are finished with an electrostatically applied, thermally cured TGIC polyester powdercoat. All poles include anchor bolts, full base cover, hand hole, ground lug and top cap.

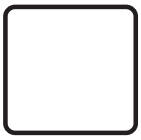

PREFIX	HEIGHT	SIZE	GAUGE	DRILLING	FINISH	OPTIONS
EH19L	20	4	11	D1	BRA	

Enter the order code into the appropriate box above. Note: Philips Gardco reserves the right to refuse a configuration. Not all combinations and configurations are valid. Refer to notes below for exclusions and limitations. For questions or concerns, please consult the factory.

PREFIX

SSS4

HEIGHT

10'
12'
14'
15'
18'
20'
24'
25'
30'

SIZE

4"

GAUGE

7
11

DRILLING

D1	1 Way
D2	2 Way
D2@90	2 Way at 90°
D3	3 Way
D4	4 Way
T2	2 3/8" OD Tenon
T4	4" OD Tenon

FINISH

PP	Prime Painted
BRP	Bronze Paint
BLP	Black Paint
WP	White Paint
NP	Natural Aluminum Paint
GV	Galvanized *(No Paint)*
FPGV	Finished Paint over Galvanized *(specify color)*
OC	Optional Color Paint *Specify RAL designation ex: OC-RAL7024.*
SC	Special Color Paint *Specify. Must supply color chip.*

OPTIONS

FES	Festoon Outlet
AHH	Additional Hand Hole

For Festoon Outlets and Additional Hand Holes, indicate height above base and orientation to original hand hole. See Pole Orientation Information on Page 4.

Couplings

Indicate size (1/2", 3/4", 1", 1 1/4", 1 1/2".) Indicate height above base and orientation to hand hole. See Pole Orientataion Information on Page 4.

CL Coupling - Internal thread

Single Mount Bullhorn Brackets

Indicate height above base and orientation to hand hole. See Pole Orientation Information on Page 4.

GM-080-19 Single - 1.9" OD
GM-080-24 Single - 2.4" OD

Motion Response Provisions

GMR Provision for Gardco HID Motion Response System

Minimum Pole Height is 18'. Includes a 1/2" coupling placed 180° to the hand hole, 12' above the pole base.

MSM Motion Sensor Mounting Provision for LED Luminaires available with Motion Response

Minimum Pole Height is 18'. Includes a special hand hole with 1/2" coupling placed in the cover plate, 180° to the hand hole, 15' above the pole base.

Refer to Steel Pole Accessories sheet 79415-26 for additional accessories.

1611 Clovis Barker Road, San Marcos, TX 78666
(800) 227-0758 (512) 753-1000 FAX: (512) 753-7855 sitelighting.com
© 2011 Koninklijke Philips Electronics N.V. All Rights Reserved.
Philips Gardco reserves the right to change materials or modify the design of its product without notification as part of the company's continuing product improvement program.
79415-17/0611

PHILIPS
GARDCO

4" Straight Square Steel

POLE DATA

CATALOG NUMBER		POLE SIZE		MAXIMUM LUMINAIRE LOADING[1]									ANCHOR BOLT DATA[2]		
				HIGH WIND CONDITIONS						NORMAL WIND CONDITIONS					
				130 MPH		120 MPH		110 MPH		100 MPH	90 MPH	80 MPH			
PREFIX	HEIGHT (FT.)	POLE SIZE (inches)	GAUGE	EPA FT²	Max Weight (lbs)	EPA FT²	Max Weight (lbs)	EPA FT²	Max Weight (lbs)	EPA FT²	EPA FT²	EPA FT²	BOLT CIRCLE (inches)	BOLT SIZE (inches)	MAX PROJ. (inches)
SSS	10	4	11	9.9	248	12.0	300	14.5	363	18.9	23.9	30.6	8.0"	3/4 x 17 x 3	4.0"
SSS	12	4	11	7.4	185	9.2	230	11.3	283	14.8	18.8	24.4	8.0"	3/4 x 17 x 3	4.0"
SSS	14	4	11	5.5	138	7.0	175	8.8	220	11.7	15.1	19.9	8.0"	3/4 x 17 x 3	4.0"
SSS	15	4	11	3.8	95	5.0	125	6.7	168	8.9	11.8	15.9	8.0"	3/4 x 17 x 3	4.0"
SSS	18	4	11	2.3	58	3.5	88	4.8	120	6.7	9.2	12.6	8.0"	3/4 x 17 x 3	4.0"
SSS	20	4	11	-	-	1.9	48	3.3	83	4.5	6.7	9.6	8.0"	3/4 x 17 x 3	4.0"
SSS	20	4	7	4.3	108	5.6	140	7.4	185	8.8	11.8	16.0	8.0"	3/4 x 17 x 3	4.0"
SSS	25	4	11	-	-	-	-	-	-	1.0	2.6	4.8	8.0"	3/4 x 17 x 3	4.0"
SSS	25	4	7	1.6	40	2.6	65	3.8	95	5.4	7.7	10.8	8.0"	3/4 x 17 x 3	4.0"
SSS	30	4	7	-	-	-	-	1.2	50	2.6	4.4	6.7	8.0"	3/4 x 17 x 3	4.0"

1. **Warning:** Additional wind loading, in terms of EPA, from banners, cameras, floodlights and other accessories attached to the pole, must be added to the luminaire(s) EPA before selecting the pole with the appropriate wind load capability.
2. Factory supplied template must be used when setting anchor bolts. Philips Gardco will not honor any claim for incorrect anchorage placement resulting from failure to use factory supplied templates.

DIMENSIONS

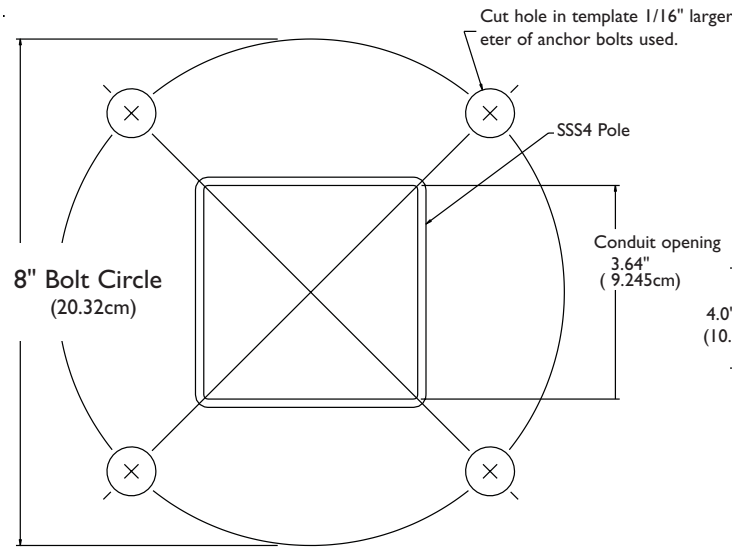

NOTE: Factory supplied template must be used when setting anchor bolts. Philips Gardco will not honor any claim for incorrect anchorage placement from failure to use factory supplied templates.

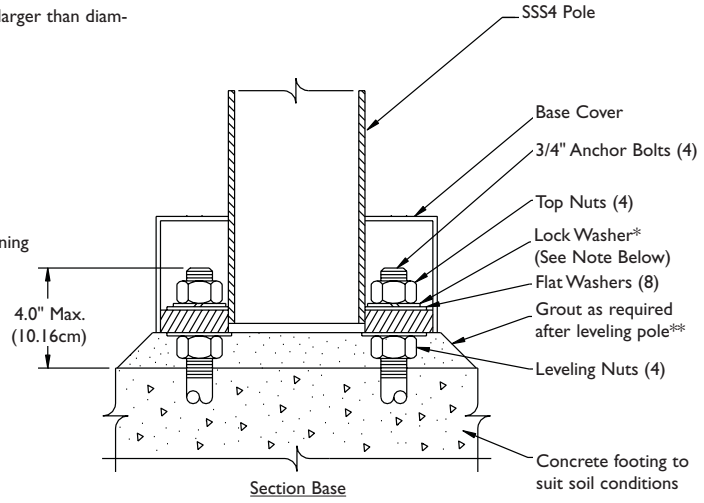

*Anchor Bolt Lock Washers are not normally required and are not included in standard anchor bolt sets. They are available upon request at additional cost.
**** Grouting should include a drainage slot or tube (by others) to permit water to drain from the base of the pole. Failure to provide drainage may weaken the pole base structure over time and may result in pole base failure, for which Philips Gardco is not responsible.**

1611 Clovis Barker Road, San Marcos, TX 78666
(800) 227-0758 (512) 753-1000 FAX: (512) 753-7855 sitelighting.com
© 2011 Koninklijke Philips Electronics N.V. All Rights Reserved.
Philips Gardco reserves the right to change materials or modify the design of its product without notification as part of the company's continuing product improvement program.
79415-17/0611

PHILIPS
GARDCO

SPECIFICATIONS

POLE SHAFT: The pole shaft is fabricated from a single-piece of 11 ga (.1196") or 7 ga (.1793") commercial carbon steel. The formed steel plate is longitudinally welded providing minimum yield strength of 46 KSI.

ANCHOR BASE: The pole anchor base is fabricated from A-36 structural quality carbon steel with a minimum yield strength of 36 KSI. The base plate telescopes the pole shaft and is circumferentially welded on both top and bottom.

ANCHOR BOLTS: Anchor bolts are fabricated from a commercial quality hot rolled carbon steel bar that meets or exceeds a minimum guaranteed yield strength of 50,000 psi. Bolts have an "L" bend on one end and threaded on the opposite end. Anchor bolts are galvanized a minimum of 12" on the threaded end. Four (4) properly sized bolts, each furnished with two (2) regular hex nuts and two (2) flat washers, are provided per pole, unless otherwise specified.

BASE COVER: A two-piece base cover completely conceals the entire base plate and anchorage.

HAND HOLE: The reinforced hand hole has a nominal rectangular 2" X 4" inside opening in the pole shaft. Included is a cover plate with attachment screws. The hand hole is located 18" above the base and 180° clockwise with respect to the luminaire arm when viewed from the top of the pole for one arm. For two arms the hand hole is located directly under one arm.

POLE TOP CAP: Each pole assembly is provided with a removable pole top cap.

FINISH: Poles are available with a bronze, natural, white or black electrostatically applied, thermally cured TGIC polyester powdercoat finish.

STOCK POLES: Poles provided from stock under the Quick Ship program are drilled for four (4) luminaires at 90° with three (3) hole sets plugged.

GENERAL POLE INFORMATION

DESIGN: The poles as charted are designed to withstand dead loads and predicted dynamic loads developed by variable wind speeds with an additional 30% gust factor under the following conditions:

The charted weights include luminaire(s) and/or mounting bracket(s).

The wind velocities are based on 10 mph increments from 80 mph through 100 mph. Poles to be located in areas of known abnormal conditions may require special consideration. For example: coastal areas, airports and areas of special winds.

Poles are designed for ground mounted applications. Poles mounted on structures (such as buildings and bridges) may also necessitate special consideration requiring Philips Gardco's recommendation.

Height correction factors and drag coefficients are applied to the entire structure. An appropriate safety factor is maintained based on the minimum yield strength of the material incorporated in the pole.

WARNING: This design information is intended as a general guideline only. The customer is solely responsible for proper selection of pole, luminaire, accessory and foundation under the given site conditions and intended usage. The addition of any items to the pole, in addition to the luminaire, will dramatically impact the EPA load on that pole. It is strongly recommended that a qualified professional be consulted to analyze the loads given the user's specific needs to ensure proper selection of the pole, luminaire, accessories, and foundation. Philips Gardco assumes no responsibility for such proper analysis or product selections. **Failure to insure proper site analysis, pole selection, loads and installation can result in pole failure, leading to serious injury or property damage.**

GENERAL INFORMATION: Mounting height is the vertical distance from the base of the lighting pole to the center of the luminaire arm at the point of luminaire attachment.Twin arms as charted are oriented at 180° with respect to each other. For applications of two (2) arms at 90° or other multiple arm applications, consult the factory.

WARRANTY: Philips Gardco poles feature a 1 year limited warranty. See Warranty Information on www.sitelighting.com for complete details and exclusions.

1611 Clovis Barker Road, San Marcos,TX 78666
(800) 227-0758 (512) 753-1000 FAX: (512) 753-7855 sitelighting.com
© 2011 Koninklijke Philips Electronics N.V. All Rights Reserved.
Philips Gardco reserves the right to change materials or modify the design of its product without notification as part of the company's continuing product improvement program.
79415-17/0611

PHILIPS

GARDCO

ORIENTATION INFORMATION

FACTORY INSTALLED OPTIONS AND ACCESSORIES

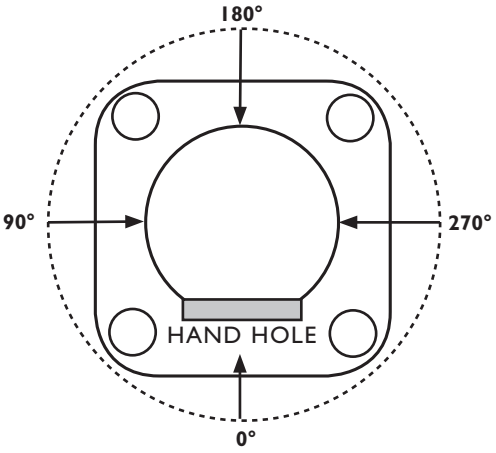

Orientation is measured clockwise from the Hand Hole Center.

For Factory Installed Options and Accessories, Specify Orientation from Hand Hole and Height Above Pole Base Where Required.

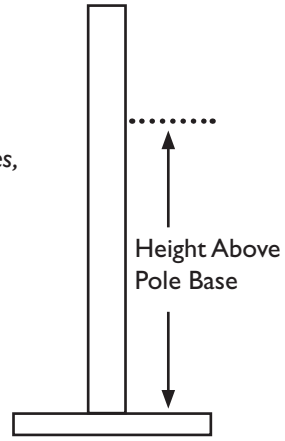

STANDARD ARM MOUNT LUMINAIRE ORIENTATION

D1 Drilled for Single Luminaire

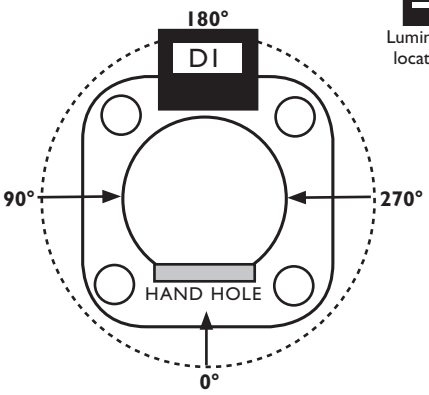

Luminaire location

D2 Drilled for 2 Luminaires at 180°

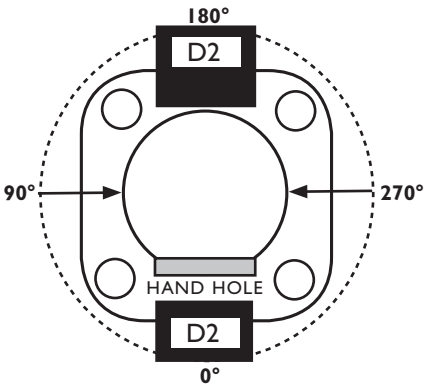

D3 Drilled for 3 Luminaires @ 90°

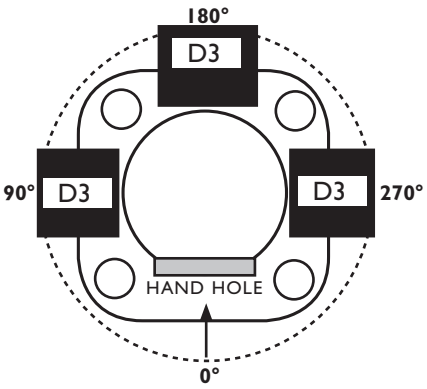

D4 Drilled for 4 Luminaires at 90°

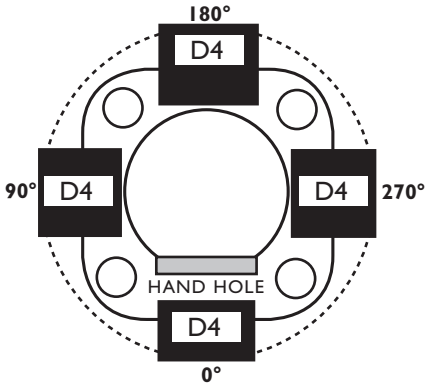

D2@90 Drilled for 2 Luminaires at 90°

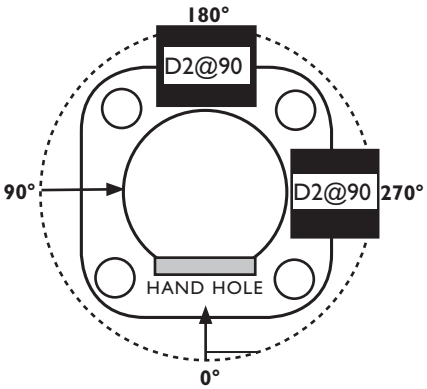

1611 Clovis Barker Road, San Marcos, TX 78666
(800) 227-0758 (512) 753-1000 FAX: (512) 753-7855 sitelighting.com

© 2011 Koninklijke Philips Electronics N.V. All Rights Reserved.
Philips Gardco reserves the right to change materials or modify the design of its product without notification as part of the company's continuing product improvement program.

79415-17/0611

PHILIPS

GARDCO

Specification Section 16512

Architectural Theme LED Lighting

jcwrightlighting

Project: WWTP IMPVT'S WENATCHEE

Contents - January 4, 2012

Type	Factory	Description
A	Guth Lighting	ACS77-82-120-EB-PI/HL
AEM	Guth Lighting	ACS77-82-120-EB-PI/HL
AEM	Bodine	B50
B	Guth Lighting	ACS77-82-120-EB/MB90-HL
C	Lithonia Lighting	LHZ618 S 1 G SDA H0806 CC
D	Crouse Hinds	N2LPS12222
E	Crouse Hinds	EVLEDBX2201
F	Chloride	IXN50 (1) RWTHF12 (1)RWTHFE12
G	Guth Lighting	ACS67-82-120-EB/PI
GEM	Guth Lighting	ACS67-82-120-EB/PI/BDL500
K	Lightguard	DXLN2GW
L	Lithonia Lighting	WFL2 150M RM 120 LPI PE BVG DBL SCWA
A1	Traxon	XB.W2.5342100
A2	Traxon	XB.W2.5361100
A3	Traxon	XB.W2.5386100
A4	Traxon	XB.W2.5311100
A5	Traxon	XB.W1.5373100
A6.1	Lightwild	LW-TILE-FLOOR-RECT-2.4CW 24IN TILE
A6.2	Lightwild	LW-TILE-FLOOR-RECT-2.4CW 36IN TILE
A7	Traxon	XB.L3.5381100
A8	Lightwild	LUMPWRLT-M-WW-48.EXT,60 DEGREE
A9	Vistapro	SL5222-*-LC5ND-JBCP150
A10	SPJ Lighting	GDG-30-W-SQ- PVDS-80-***K-120V/FB-CPS-1
A11	McGraw Edison	ISS-70-MP-120-2SA-BZ-F-P-LP
A12	Bruck	135401-1 - 75' RUNS
A12	Bruck	135912
A12	Bruck	135910
A12	Bruck	70438
A13	Vistapro	1079-G-W-FL-M-120

WALL WASHER SHIELD AC XB

INSTALLATION GUIDE

Covers:
Wall Washer Shield AC XB-18
Wall Washer Shield AC XB-36

4/12 v0.4

An OSRAM Company

Contents

1.	INTRODUCTION	P.3
2.	SAFETY AND OPERATION	P.6
3.	INSTALLATION	P.9
4.	SYSTEM CONFIGURATION	P.15
5.	CARE AND MAINTENANCE	P.16
6.	TECHNICAL SPECIFICATION	P.17
7.	WARRANTY STATEMENT	P.17

FOR YOUR OWN SAFETY AND THAT OF THE PRODUCT, PLEASE READ THIS INSTALLATION GUIDE MANUAL CAREFULLY BEFORE BEGINNING SETUP AND INSTALLATION.

THIS IS A CLASS B PRODUCT. IN A DOMESTIC ENVIRONMENT THIS PRODUCT MAY CAUSE RADIO INTERFERENCE IN WHICH CASE THE USER MAY BE REQUIRED TO TAKE ADEQUATE COUNTER MEASURES.

1. INTRODUCTION

1.1 General

The Traxon™ Wall Washer Shield AC XB is an IP66-rated, AC line input, lighting fixture equipped with high-brightness LEDs that generates single color or color changing (RGB model only) light for a rich wall-washing effect. This fixture is suitable for indoor or outdoor use and equipped with a host of customization options including LED type, LED color, beam angles and lenses. The simple connection system and long run length capability enables easy installation for large-scale lighting projects.

The Wall Washer Shield AC XB has an aluminium die cast housing with a clear tempered glass cover lens.

Features:

- 18 or 36 LED options available
- Independent adjustable LED head - 135° vertical tilt; 180° horizontal rotation
- Powered by AC line voltage
- DMX Control
- Daisy Chain System
- Auto-Addressing
- Outdoor Applications (IP66-rated)
- Simple connection system
- Detachable base design
- Field-installable connectors

1.2 Dimensions

Wall Washer Shield AC XB-18

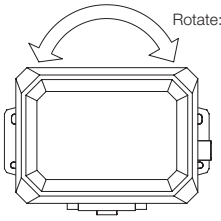

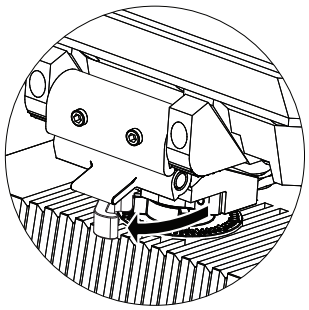

Pull Rotation Lever open
to rotate.

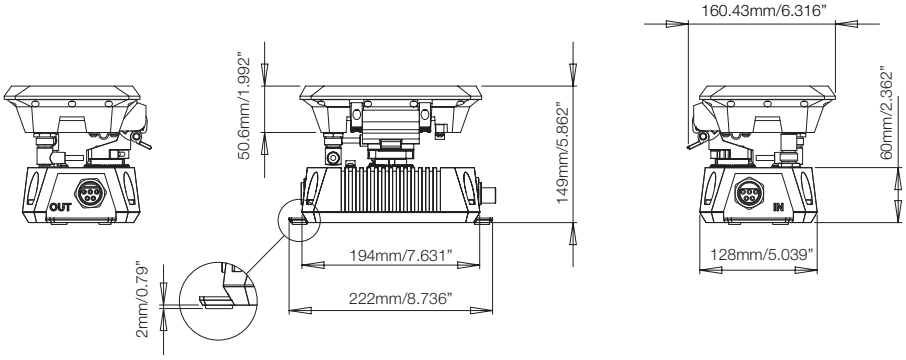

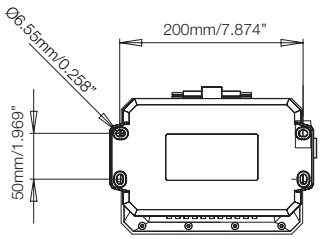

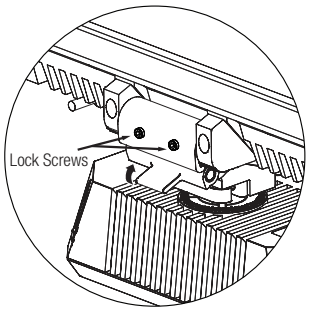

Pull Hinge up to tilt.
Once angle is defined, push
Hinge down and use Lock Screws
to finalize the angle.

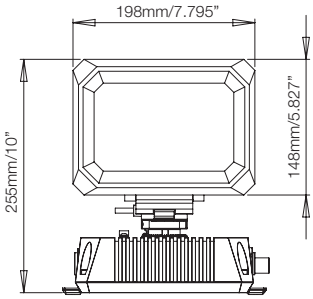

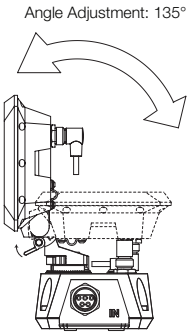

Wall Washer Shield AC XB-36

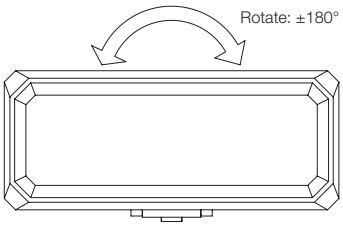

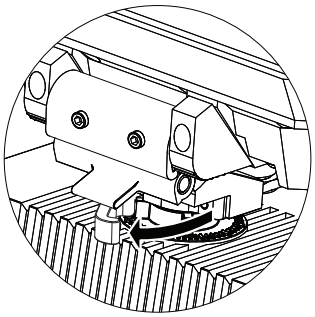

Pull Rotation Lever open
to rotate.

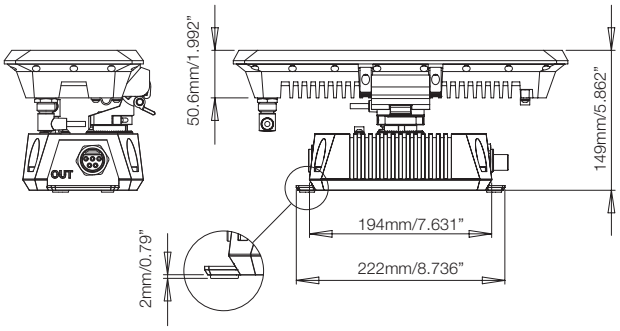

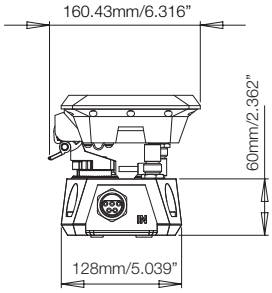

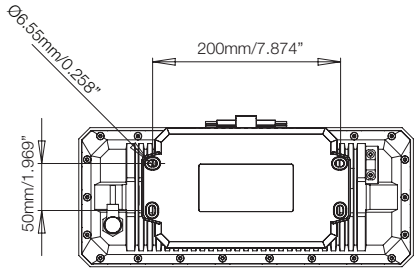

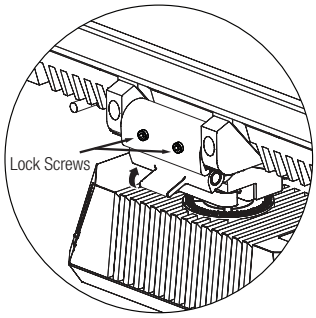

Pull Hinge up to tilt.
Once angle is defined, push
Hinge down and use Lock Screws
to finalize the angle.

Angle Adjustment: 135°

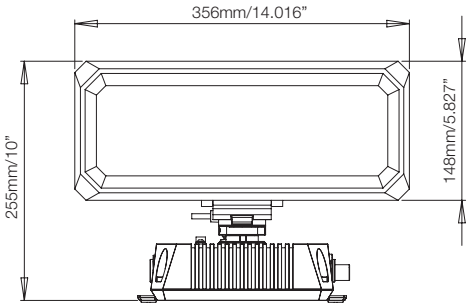

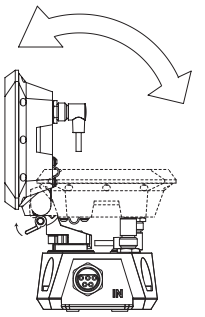

2. SAFETY AND OPERATION

CAUTION – UNPLUG THE POWER SUPPLY FROM THE MAINS POWER BEFORE CONNECTING ANY CABLES TO AVOID DAMAGING THE PRODUCTS. DO NOT HOT SWAP FIXTURES.

CAUTION – AVOID LOOKING DIRECTLY INTO THE LED LIGHT SOURCE AT CLOSE RANGE FOR YOUR OWN SAFETY.

ANY PERSONS INSTALLING THIS PRODUCT SHOULD COMPLY WITH LOCAL STANDARDS AND REGULATIONS AND MUST BE QUALIFIED FOR THE HANDLING OF ELECTRICAL EQUIPMENT.

- Do not attempt to install or use a fixture until installation instructions and safety labels are fully understood.
- This product is designed for indoor and outdoor use.
- Ensure product operates within the specified temperature range.
- Do not attempt to open the product. Not user serviceable.
- Do not use a fixture if any part of it, or the power cables are damaged.
- Only use fixture for specified voltage, do not exceed.
- Always maintain connection to ensure waterproofing, keep all Dust Caps and End Caps in a container for reuse. Caution: Dust caps are NOT waterproof.
- DO NOT twist the connectors while still connected with base unit. Insert screwdriver in the locking clip hole to unlock the connector.
- Ensure locking clip is present and properly inserted on the connector when making a connection.
- If the fixture has been subjected to drastic temperature variances, for example, following transportation, do not connect the fixture until it has reached room temperature, as moisture condensation may cause electric shock and product damages.
- When installing the fixtures and system power supplies, please ensure they will not be exposed to moisture and extreme heat (and direct sunlight for outdoor products). Besides, keep a clean operating environment for the fixtures and system power supplies.
- Please study this Installation Guide thoroughly and check the latest Technical Specification Sheets available from our website www.traxontechnologies.com before setup.
- **Any non-compliance of the Installation Guide will void the Traxon warranty.**

2.1 Surge Protection

1. Individual Power Supply Surge Protective Device (SPD)
   a. UL 1499 Type 1 or Type 2 SPD up to IEEE & ANSI C62.41.2 requirement should be installed in the main incoming area of the Power Source.
   b. UL 1499 Type 3 SPD up to IEEE & ANSI C62.41.2 should be installed in individual PSU, individual LED Engine and individual Data Control Engine to protect the device from abnormal power surge and lightning surge.
2. Product Earthing
   a. The exposed metal of the product body should be earthed with resistance less than 1 ohm to the Master Ground according to the ANSI/ESD S6.1 and IEEE standard 142-1982 requirement.
3. Mesh or Mechanical Fixture Earthing
   a. All the mesh or mechanical fixture to fix the product should be earthed with less than 1 ohm resistance to Master Ground.
4. Shielding of the cable
   a. Data Cables or Power Cables of length longer than 10m or Cables to be mounted on Roof Top Area should be shielded to protect the cable from picking up the induced surge from outside environment.
   b. The shielding resistance to the Master Ground should be less than 1 ohm.
5. System working environment requirement
   a. Traxon product should comply with IEC 61000 Power Surge and Fast Transient Test requirements.
   b. Contractor should ensure that the ambient environment should comply with IEC 61000 requirements.
6. PSU and Data Control System Rack Earthing
   a. All the racks for PSU and Data Control System should be properly earthed with less than 1 ohm resistance to Master Ground.

It is highly recommended that proper surge protection is implemented into the final installation. See FIG 1 (P. 8) for wiring details.

FIG 1: Surge Protection Block Diagram

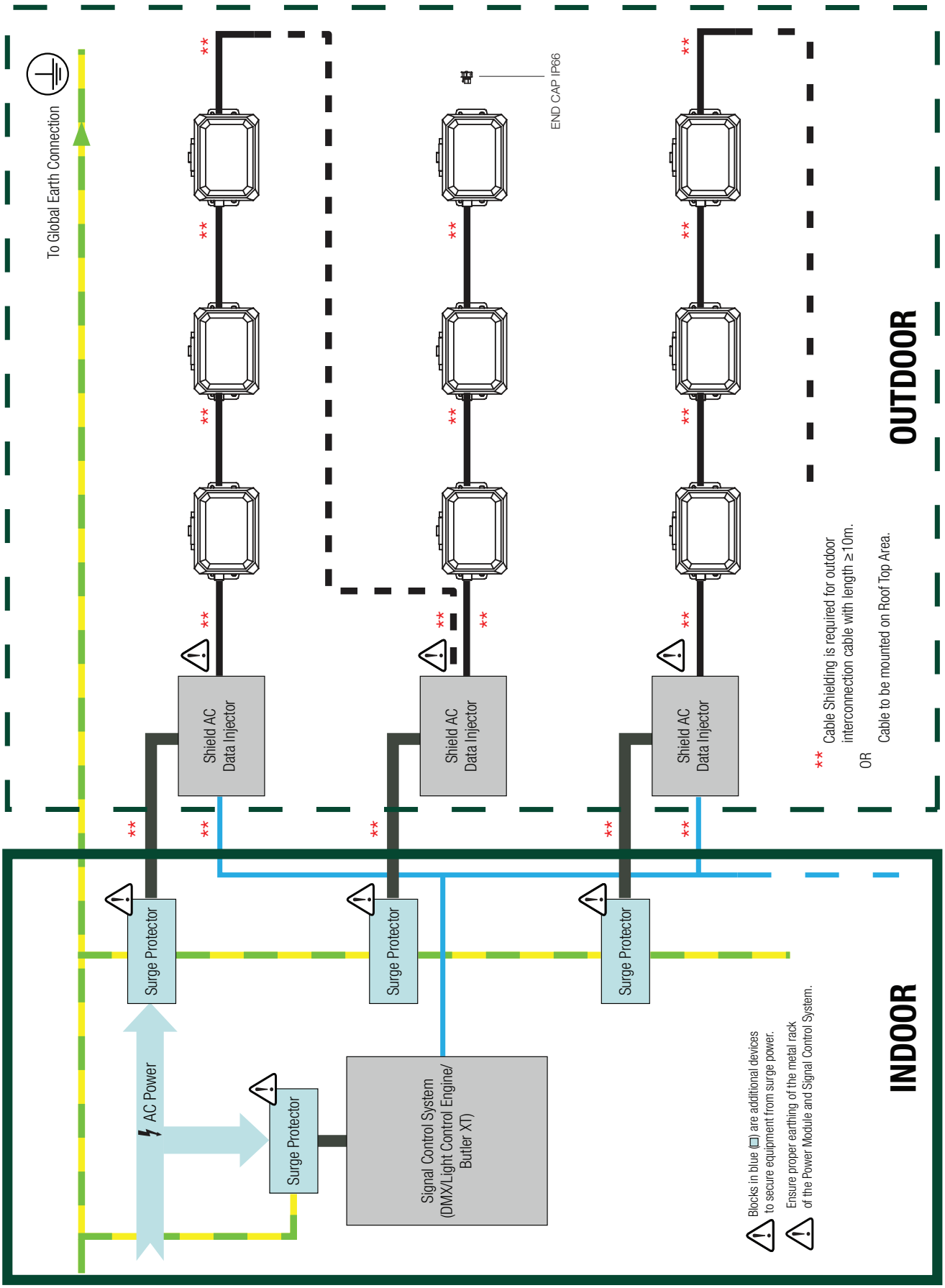

3. INSTALLATION

3.1 Installation Sequence

Plan your installation before mounting any luminaires. The following should be considered for a successful installation.

- Installation distances and appropriate cable lengths.
- Appropriate anchor bolts where necessary to secure the luminaire.
- The number of fixtures and appropriate power sources.
- DMX controller to be used to control the luminaires.

3.1.1 Installation Checklist

1. Prepare cables and connectors.
2. Perform functional check of Luminaires.
3. Ensure all connection points are covered by their respective Dust Caps and/or Waterproof End Caps after testing.
4. Ensure all pre-installation checks laid out below have been followed.
5. Mount the luminaires on-site. If the installation is to be left uncompleted overnight, check all non-connected connection points on luminaires are covered with Waterproof End Caps.

Ensure all the Connection Cables, Luminaires with Power Supply Units and Data Injector Boxes are initially stored in a dry area to guarantee the complete sealing of the system from water before installation.

FIG 2: Cautions must be maintained in order to ensure waterproofing cababilities of entire system.

3.2 Functional Check Of The Products

3.2.1 Sequence For Cable and Connector Preparation

1. Trim cable.
2. Plan for any possible bending of cables.
3. Fix cable ends with connectors.
4. Complete sealing of connectors by tightening screw nut with spanner/wrench.
5. Unplug Dust Caps/Waterproof End Caps and keep safe for reuse.
6. Connect Luminaires with Power Supply Units and Data Injector Boxes with connection cables in the daisy-chain manner described in the wiring diagram (P. 15).
7. Open Short Test should be performed to ensure cable wires are connected correctly. Recrimping of wires should be done if any failures occur.
8. Perform functional check on all Luminaires.
9. Report any functional defect found to your nearest Traxon Technologies office. DO NOT attempt to install a luminaire with functional defects on-site.

3.2.2 Cable Preparation And Connectors

Trim the cable outer sheath and insulation layer with the 1:1 wire trimming gauge (refer to the installation guide provided on the Traxon Tag attached to the Cable Connector Head).

FIG 3: Trimming the cable outer sheath

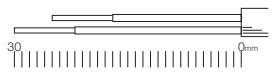

1:1 Gauge attached to the Cable Connector Head

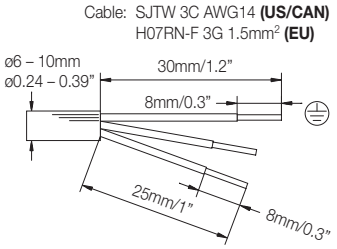

For 3-core cable

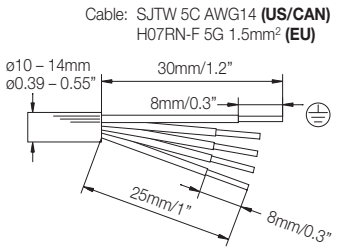

For 5-core cable

Fix the cable ends with connectors (refer to the installation guide provided on Traxon Tag attached to Cable Connector Head)

5-pin AC socket

Traxon part no.
XB.AC.2303000

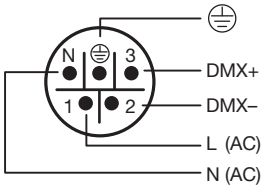

Rear view

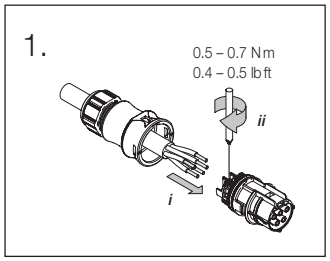

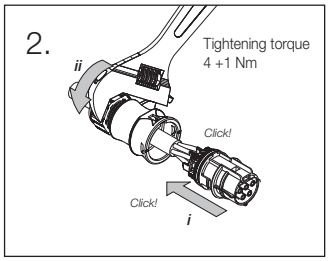

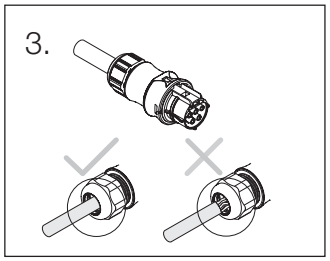

Use spanner/wrench to tighten cable connector screw nut to ensure waterproof seal.

Ensure cable is not exposed.

5-pin AC plug

Traxon part no.
XB.AC.2302000

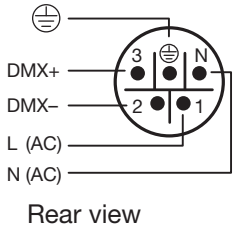

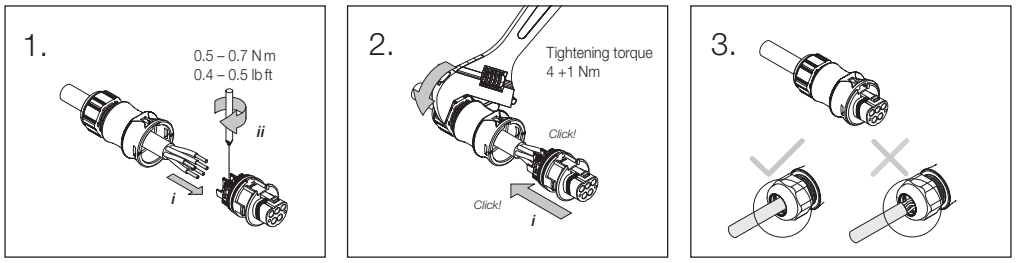

Use spanner/wrench to tighten cable connector screw nut to ensure waterproof seal.

Ensure cable is not exposed.

3-pin AC socket

Traxon part no.
XB.AC.2306000

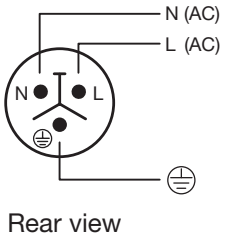

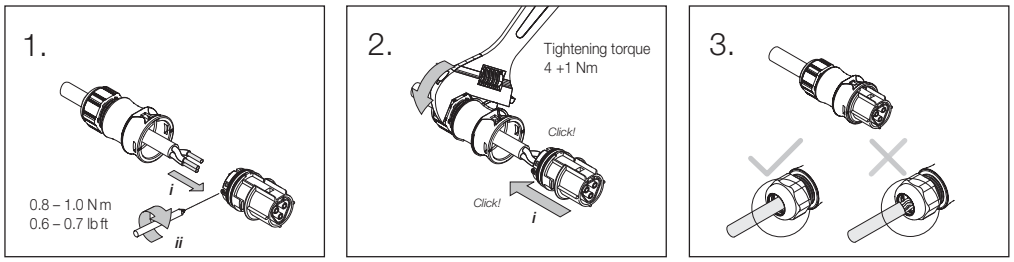

Use spanner/wrench to tighten cable connector screw nut to ensure waterproof seal.

Ensure cable is not exposed.

NOTE: Water leakage induced by a loosened screw nut (see step 2 of the above instructions) will not be under warranty by Traxon Technologies.

3.2.3 Cable Bending

Cable must NOT be bent below the Minimum Bending Radius (4x Cable Diameter) as specified by cable manufacturer and the Non-Bendable Length of 5cm near the connector end MUST be adhered to.

Bending radius (for conductors) Note the minimum bending radius for conductors > 1.5mm². Pull forces on the contact points can be avoided by proceeding as follows: a – Bend the wire as required s – Cut the wire to length d – Strip the cable and wires	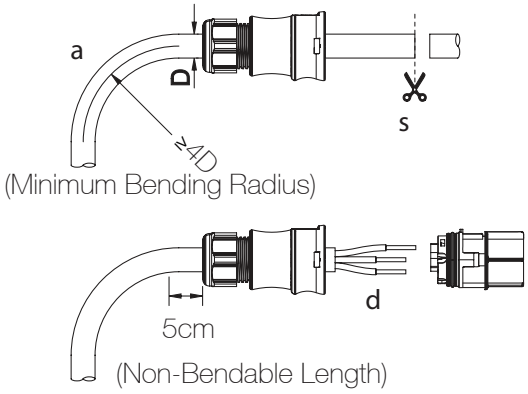

3.2.4 Final Check of Connector

Connector D-Ring must be in correct postion for proper waterproof function.

D-Ring in correct position.	
D-Ring is displaced. The rubber ring is not in its intended position and will cause a weak point for water ingress.	

3.3 Before On-Site Installation

Ensure all the Connection Cables are removed from the AC Base Unit with the correct method:

1. Insert Screwdriver as shown in FIG 4 to press down on the locking clip to unlock.
2. Pull the cable outwards from the connector head. DO NOT twist the connectors while still connected with the AC base unit.

FIG 4: Correct method to separate the Connectors

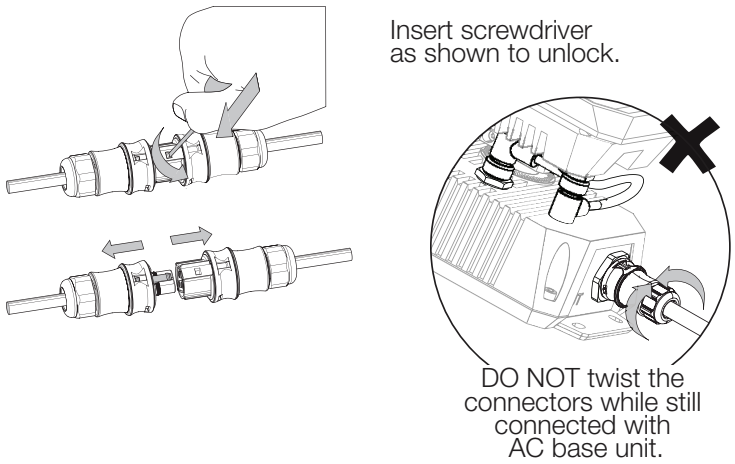

3. Transfer the locking clip from the Socket connector of the Luminaire back to the cable Plug connector (see section 3.2.2 Cable Preparation And Connectors P.10-11 to distinguish between Sockets and Plugs). Ensure the locking clip is inserted correctly to prevent the Connector Head from damage.

FIG 5: Locking the Cable Connectors

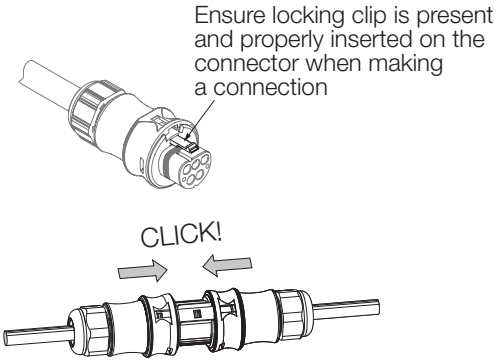

4. Re-connect all Dust Caps and Waterproof End Caps firmly to cover all fixture connection points one by one immediately after connection cable has been successfully disconnected. Please contact your local support team for extra Dust Caps and Waterproof End Caps if any are lost. Do not attempt to install the device if no Dust Caps or Waterproof End Caps are present/available.

3.4 On-Site Installation

Do not attempt installation in wet or severe weather conditions.

1. Mount the AC Base Unit with 4x M6 Anchor Bolts.

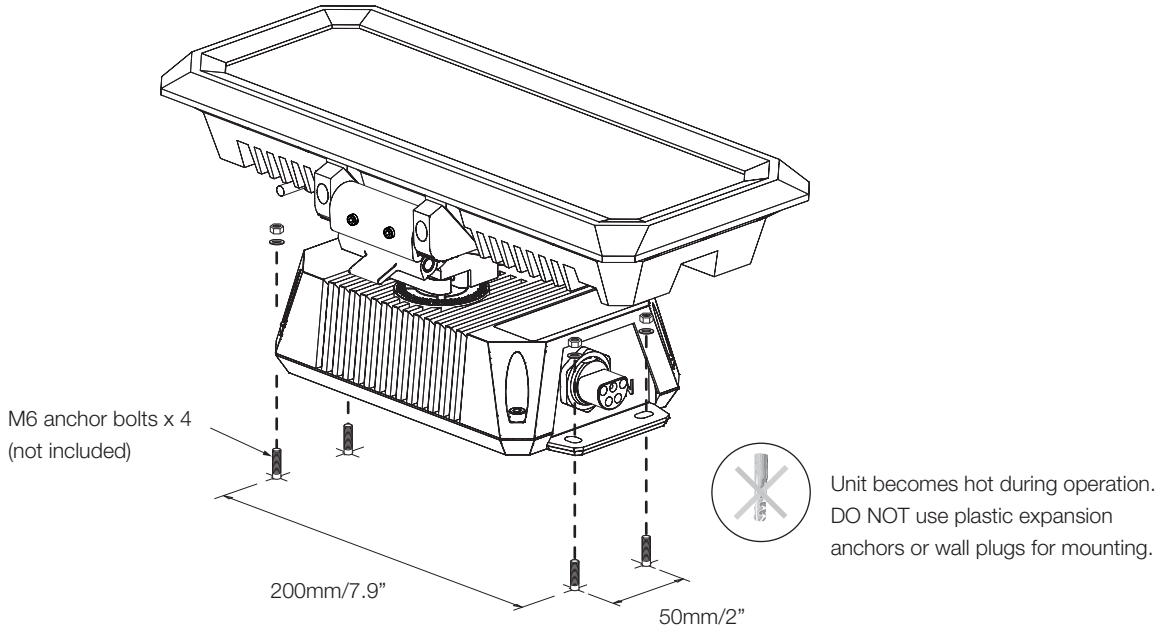

2. Release the two locks by: (1) Pulling the Locking Hinge upwards; (2) Pulling out Rotation Lever

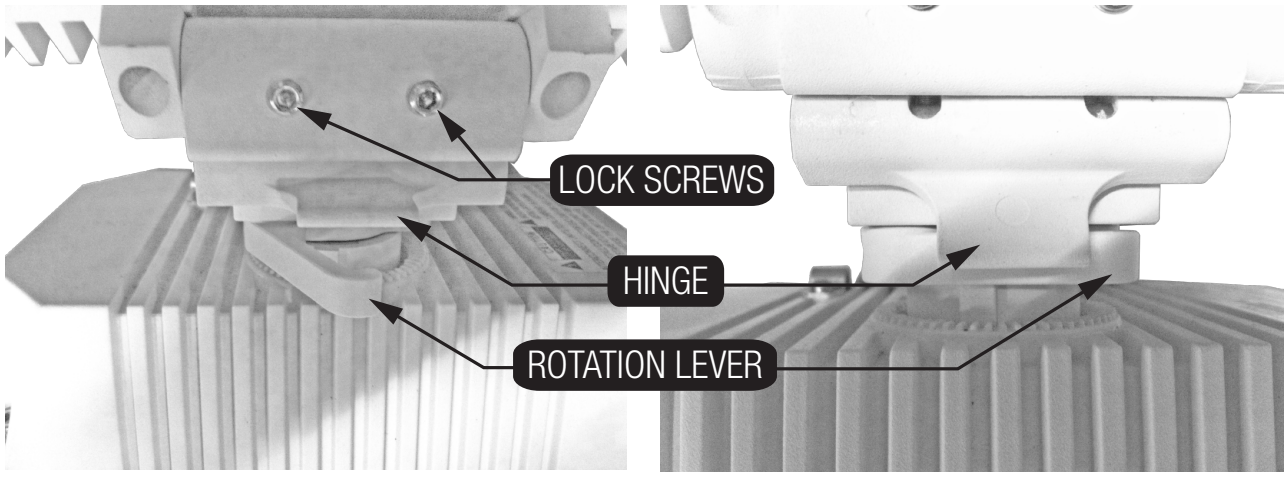

UNLOCKED position:	**LOCKED position:**
Pull out rotation lever and pull hinge up.	Push back Rotation Lever and push hinge down.

3. Rotate the luminaire to desired position, then push the lever back to lock.
4. Tilt the luminaire head to the desired angle, then push the hinge down to lock. Tighten the lock screws.
5. Unplug the Dust Caps/Waterproof End Caps and keep them in a container for reuse.
6. Fully connect the luminaires with connection cables one after the other. Do not work on the other unit connections until the first unit under installation is properly connected.
7. Do not leave and expose Luminaires with Dust Cap plugged in under wet/raining or snowing environment as the Luminaire is not IP66 compliant unless properly connected.

4. SYSTEM CONFIGURATION

FIG 6: Typical Wiring Diagram

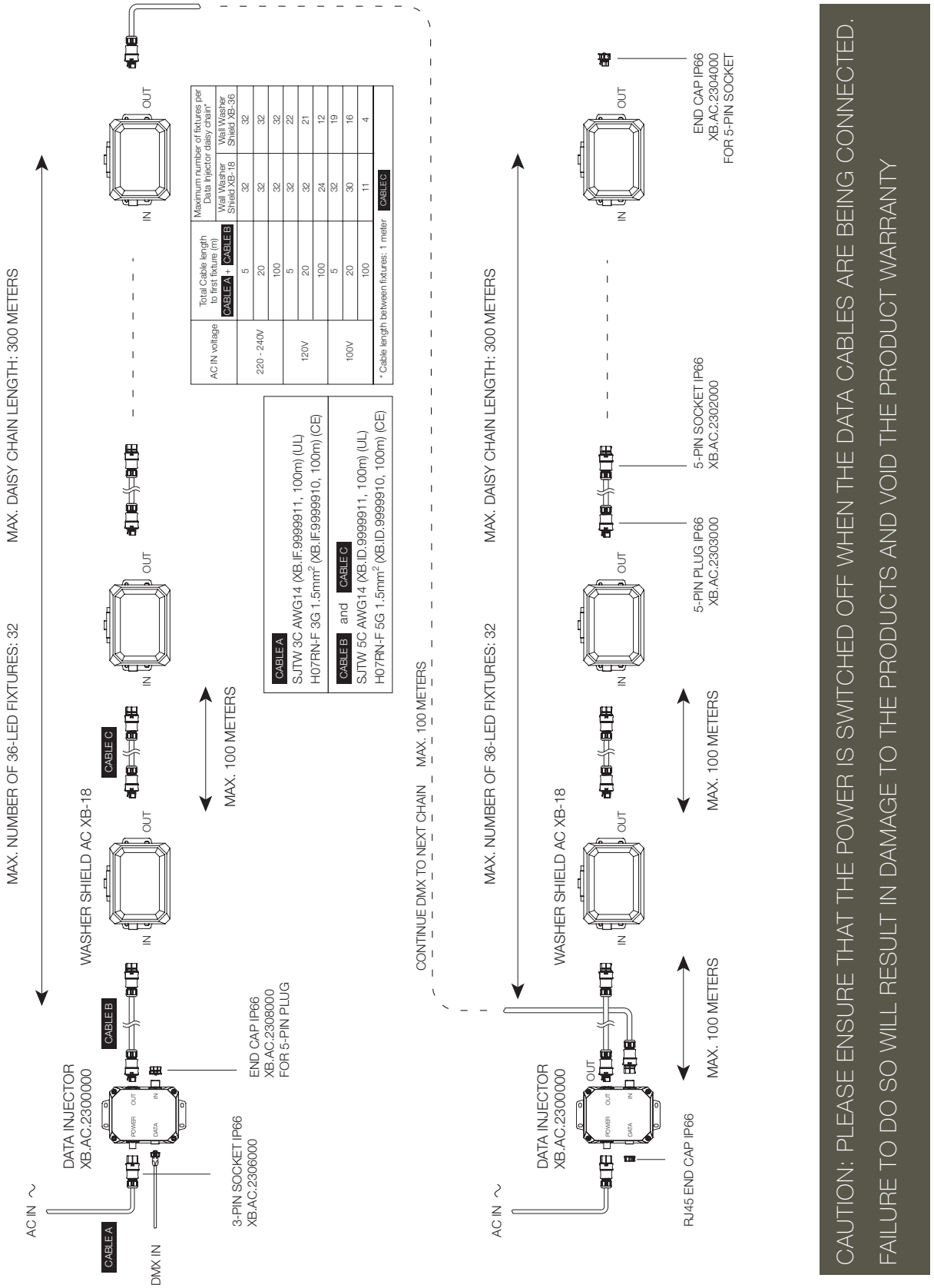

CAUTION: PLEASE ENSURE THAT THE POWER IS SWITCHED OFF WHEN THE DATA CABLES ARE BEING CONNECTED. FAILURE TO DO SO WILL RESULT IN DAMAGE TO THE PRODUCTS AND VOID THE PRODUCT WARRANTY

5. CARE AND MAINTENANCE

TRAXON™ PRODUCTS ARE OF SUPERIOR DESIGN AND QUALITY AND SHOULD BE TREATED WITH CARE. THE RECOMMENDATIONS BELOW WILL HELP FULFILL ANY WARRANTY OBLIGATIONS AND GAIN GOOD USE AND LONGEVITY FROM THE PRODUCTS.

- Do not attempt or use the product(s) until you read and understand the installation instructions. Failure to adhere to these instructions could result in serious injury or property damage.
- Do not use product(s) if cables are damaged.
- Do not connect cables and connectors when wet or in wet area. Moisture on bare connectors can cause electric shock and damage to product(s).
- Do not use product(s) in extreme heat environment. Ensure there is sufficient airflow and use cool air circulation if required.
- Do not drop, knock, or shake product(s). Rough handling can damage the electronics and void the warranty.
- Do not use harsh chemicals, cleaning solvents, or strong detergents to clean products. Wipe with a damp cloth on housings and a dry cloth on electronics to remove dirt or dust.
- Do not attempt to service or repair the product(s) unless done by an authorized service personnel. Contact your local Traxon office or distributor for details.

If the product is not working as specified, please contact your nearest authorized service center or Traxon Technologies office for assistance.

6. TECHNICAL SPECIFICATION

RGB

Color Range:	16.7 million additive RGB colors with variable intensity
Light Source:	18 / 36 High intensity power LEDs
Beam Angle:	10°, 20°, 30°, 40°, 40°x10°, open beam
Power Input:	100-240V AC 50/60Hz
Power Consumption:	28W max. / 53W max.
Weight:	3.3kg / 4.3kg
Operating Temperature:	–40°C to 60°C (–40°F to 140°F); startup temperature, –20°C/–4°F

White

Color Temperature:	6500 K (Cold white)	2700 K (Warm white)
Light Source:	18 / 36 High intensity power LEDs	
Beam Angle:	10°, 20°, 30°, 40°, 40°x10°, open beam	
Power Input:	100-240V AC 50/60Hz	
Power Consumption:	28W max. / 53W max.	
Weight:	3.3kg / 4.3kg	
Operating Temperature:	–40°C to 60°C (–40°F to 140°F); startup temperature, –20°C/–4°F	

As with all electronic devices, LED output degrades over time - a term called lumen depreciation. This also explains why it is nearly impossible to expect photometric performances of two LED products with different service life spans to be the same. The rate of LED degradation is a complex function of many factors such as operating efficiency, duration of continuous operation, and operating conditions (e.g. ambient temperature).
Because LEDs are semiconductor devices, their performances are subject to inherent variability commonly found in semiconductor industry. To improve consistency in performance across the same product. LED manufacturers “sort” LEDs into bins according to different preset parameters, such as forward driving voltage, illumination, etc. Whereas binning is a sorting function, it is not a correction process. Inherent variability in the manufacturing process always results in different binning distributions according to different production lots. Traxon uses automatically binned LEDs on its products, thereby minimizing output variations within the model range.

7. WARRANTY STATEMENT

Traxon Technologies warrants its Products against material or workmanship defects for a period of three (3) years from date of purchase, provided that the purchased items are used under the conditions stated in this user manual.

Please refer www.traxontechnologies.com for all warranty terms and conditions.

traxon

Please check for the latest updates and changes on the Traxon website.

© 2012 TRAXON TECHNOLOGIES ALL RIGHTS RESERVED. Information is subject to change without prior notice.

Submitting Agency:	Description: XB.W2.5342100 Project: WWTP IMPVT'S WENATCHEE Notes:	Type: A1
jcwrightlighting phone: 509-535-0098		

traxon

Wall Washer Shield XB WW

XB.WF.xxxxxxx XB.WG.xxxxxxx	Wall Washer Shield XB WW is a IP66-rated high-power lighting fixture packed with Luxeon® LEDs that generates high brightness warm white light for a rich wall-washing effect. The Wall Washer Shield is suitable for indoor or outdoor use and has a variety of beam angles available.	LUXEON Lighting Network CE FC cETLus IP66

PRODUCT SPECIFICATIONS

- **Light Source:** WF: 18 High intensity power LEDs
  WG: 36 High intensity power LEDs
- **Color Temperature:** Warm white - 2700 K
- **Beam Angle[1]:** 10°, 20°, 30°, 40°, 40°x10°, open beam
- **Luminous Flux[2]:** WF: 832 lm (30° optics)
  WG: 1664 lm (30° optics)
- **Efficacy[2]:** WF: 30.8 lm/W (30° optics)
  WG: 30.8 lm/W (30° optics)
- **Cover Lens:** Clear tempered glass
- **Housing:** Aluminium die cast
- **Adjustment Options:** 360° (horizontal), 170° (vertical)
- **Size:** WF: 198mm (L) x 137mm (W) x 200mm (H) / 7.8" (L) x 5.4" (W) x 7.9" (H)
  WG: 356mm (L) x 137mm (W) x 200mm (H) / 14" (L) x 5.4" (W) x 7.9" (H)
- **Weight:** WF: 1.7kg / 3.75lbs
  WG: 2.8kg / 6.16lbs
- **Regulatory Listing & Safety Approval:** CE, FCC, cETLus
- **Operating Temperature[3]:** −20°C to +60°C / −4°F to +140°F
- **Storage Temperature:** −40°C to +70°C / −40°F to +158°F
- **Environment:** Outdoor (IP66)
- **Humidity:** 85%, non-condensing

ELECTRICAL SPECIFICATIONS

- **Power Consumption:** 21W typ. / 27W max.
  42W typ. / 54W max.
- **LED Current:** 350mA DC

SYSTEM SPECIFICATIONS

- **Power/Data Interface:** TX CONNECT XB Indoor/Outdoor
- **Control:** DMX512 or standalone control by preset programs on LED Engine XB-SD
- **Power Supply:** LED Engine XB-SD

1. FWHM. Corrected notation to previous specifications, 10 was 6; 20 was 15; 30 was 25; 40 was 40; 40x10 was 25x6.
2. Based on photometric data from Wall Washer Shield AC XB-36 and maximum power consumption of this fixture.
3. The Wall Washer Shield XB has a built-in temperature monitoring circuit for protection from extreme operating temperatures. The light output will dim when the temperature rises to an unsafe level. Avoid installing the fixture in an enclosed area and allow sufficient ventilation for convection cooling.

LED CHARACTERISTICS Because LEDs are semiconductor devices, their performances are subject to inherent variability commonly found in semiconductor industry. To improve consistency in performance across the same product, LED manufacturers "sort" LEDs into bins according to different preset parameters, such as forward driving voltage, illumination, etc. Whereas binning is a sorting function, it is not a correction process. Inherent variability in the manufacturing process results always in different binning distributions according to different production lots. Traxon uses automatically binned LEDs on its products, thereby minimizing output variations within the model range.

As with all electronic devices, LED output degrades over time – a term called lumen depreciation. This also explains why it is nearly impossible to expect photometric performances of two LED products with different service life spans to be the same. The rate of LED degrade is a complicate function of many factors such as operating efficiency, duration of continuous operation, and more significantly, environmental conditions (ambient temperature for example). If allowed working under optimal operating temperature range and with good ventilation, LED devices enjoy long service lives over conventional light sources. When using/installing LED devices, care should be taken to ensure that the devices will operate within the operating conditions specified in respective product literature.

WWW.TRAXONTECHNOLOGIES.COM

© 2010 TRAXON TECHNOLOGIES ALL RIGHTS RESERVED. TRAXON™, TX CONNECT™, LUXILED™ ARE TRADEMARKS OF TRAXON TECHNOLOGIES. U.S. PATENTS, E.U. PATENTS, JAPAN PATENTS, OTHER PATENTS PENDING. SPECIFICATIONS ARE SUBJECT TO CHANGE WITHOUT NOTICE.

METALARC® PULSE START – E17 & PAR38 Low Wattage

Metal Halide Lamps for Open and Enclosed Fixtures

SYLVANIA METALARC PRO-TECH® and METALARC PULSE START low wattage E17 and PAR38 lamp's premium performance provides opportunities for higher maintained illumination levels and substantial energy savings.

The METALARC PRO-TECH lamp design enhances safety in open or enclosed fixtures and includes a shroud around the arc tube and, in some cases, a thicker walled outer jacket. In addition, METALARC PRO-TECH lamps have a reduction in UV output compared to standard metal halide lamps. The use of open fixtures means more light output over life and lower maintenance costs because there are no lenses to gather dirt and dust, thus extending lamp replacement procedures.

The METALARC enclosed rated E17 lamps provide a solution for enclosed rated fixtures and contain all the benefits of the pulse start technology including reduction in color shift over the life of the lamp, better lumen maintenance and potentially longer life.

Key Features & Benefits

- Full range of wattages from 50 through 175 watts in a medium base
  - 70W, 100W, 150W and 175W lamps available for enclosed rated fixtures
- Universal operating position
- Up to 20,000 hours average rated life
- Available in clear and coated
- PAR38 version available to provide high illuminance levels for featured displays and architectural high-lighting
- METALARC PRO-TECH design – glass shroud for containment and UV-reduction – suitable for use in open or enclosed fixtures
  - NEC 2005 and later revisions require new construction and/ or major renovations
    - To use open rated lamps with EX39 sockets in open fixtures, OR
    - Fixtures with a lens
  - Lower maintenance costs
  - Lower initial luminaire cost
  - Reduced luminaire dirt depreciation
  - Dedicated exclusionary medium socket for 50-150 watts with open rated lamps
  - Retrofits into standard sockets

OSRAM SYLVANIA offers the most comprehensive lamp and ballast system solutions. For compatible SYLVANIA ballasts please refer to our Lamp and Ballast Catalog or contact your local SYLVANIA representative.

Product Offering

Wattages	Outer Jacket	Fixture
50, 70, 100, 150	Clear and Coated	Open or Enclosed Rated
70, 100, 150, 175	Clear and Coated	Enclosed Rated Only

Application Information

Applications

- Ambient lighting for industrial and retail
- Flood lighting
- Lobbies, atriums
- Malls
- Parking lots
- Security lighting

Sockets

1. To prevent relamping an open fixture with standard metal halide lamps, a special socket is available with open fixtures for all lamp types.
2. Operating orientation: 50-150W operate in the universal orientation. 175W is for base up only applications.

Fixture

Consult your local fixture agent for available fixtures.

Specification Data

Fixture Description:	Type
Project/Job:	
SYLVANIA lamp:	
SYLVANIA ballast:	
Notes:	

Ordering Information

METALARC PRO-TECH® PULSE START

Item Number	Ordering Abbreviation	Watts	Finish	Bulb	Base	ANSI Code	Average Rated Life (hr.)[1] Vertical	HOR	Initial Lumens	Mean Lumens	Color Temp.	CRI
64587	MP50/U/MED	50	Clear	E17	Med.	M110/O	20,000	10,000	3,450	1,600	3000K	70
64588	MP50/C/U/MED	50	Coated	E17	Med.	M110/O	20,000	10,000	3,200	1,500	2900K	70
64547	MP70/U/MED	70	Clear	E17	Med.	M98/O	15,000	10,000	5,200	3,400	3000K	75
64546	MP70/C/U/MED	70	Coated	E17	Med.	M98/O	15,000	10,000	4,700	3,100	2900K	75
64625	MPD70/U/MED/840	70	Clear	E17	Med.	M98/O	7,500	6,000	5,500	4,000	4200K	80
64621	MPD70/C/U/MED/840	70	Coated	E17	Med.	M98/O	7,500	6,000	5,100	3,800	4000K	82
64417	MP100/U/MED	100	Clear	E17	Med.	M90/O	15,000	10,000	8,500	5,200	3000K	75
64418	MP100/C/U/MED	100	Coated	E17	Med.	M90/O	15,000	10,000	7,900	5,800	2900K	75
64426	MPD100/U/MED/840	100	Clear	E17	Med.	M90/O	7,500	6,000	8,400	5,800	4200K	82
64433	MPD100/C/U/MED/840	100	Coated	E17	Med.	M90/O	7,500	6,000	7,700	5,500	4000K	82
64402	MP150/U/MED	150	Clear	E17	Med.	M102/O	15,000	10,000	12,900	8,000	3000K	75
64406	MP150/C/U/MED	150	Coated	E17	Med.	M102/O	15,000	10,000	11,000	7,500	2900K	73
64403	MPD150/U/MED/840	150	Clear	E17	Med.	M102/O	7,500	6,000	12,500	11,000	4200K	88
64425	MPD150/C/U/MED/840	150	Coated	E17	Med.	M102/O	7,500	6,000	11,000	9,500	4000K	73

METALARC® PULSE START (Rated for enclosed fixtures)

Item Number	Ordering Abbreviation	Watts	Finish	Bulb	Base	ANSI Code	Average Rated Life (hr.)[1] Vertical	Initial Lumens	Mean Lumens	Color Temp.	CRI
64836	M70/U/MED	70	Clear	E17	Med.	M98/E	12,000	5,600	3,300	4000K	65
64891	M70/C/U/MED	70	Coated	E17	Med.	M98/E	12,000	5,400	3,000	3800K	65
64818	M100/U/MED	100	Clear	E17	Med.	M90/E	12,000	8,500	4,675	4000K	65
64894	M100/C/U/MED	100	Coated	E17	Med.	M90/E	12,000	8,000	4,400	3650K	68
64785	M150/U/MED	150	Clear	E17	Med.	M102/E	12,000	14,000	11,000	4300K	65
64892	M150/C/U/MED	150	Coated	E17	Med.	M102/E	12,000	12,750	9,300	4000K	70
64171	MS175/PS/BU-ONLY/MED	175	Clear	E17	Med.	M137/E, M152/E	15,000	17,500	12,800	4000K	65
64170	MS175/C/PS/BU-ONLY/MED	175	Coated	E17	Med.	M137/E, M152/E	15,000	16,600	12,500	3700K	70

METALARC PRO-TECH PULSE START PAR38/ECO®

Item Number	Ordering Abbreviation	Watts	ANSI Code	Beam Angle/ CBCP	Initial Lumens	Average Rated Life (hr.)	Color Temp.	CRI[4]
64590	MP70PAR38/U/SP20/ECO[5,6]	70	M98/O	20°/18,000	3,400	8,500	3200K	75
64592	MP70PAR38/U/FL35/ECO[5,6]	70	M98/O	35°/10,000	3,400	8,500	3200K	75
64594	MP70PAR38/U/VWFL65/ECO[5,6]	70	M98/O	65°/3000	3,400	8,500	3200K	75
64580	MP100PAR38/U/SP20/ECO[5,6]	100	M90/O	20°/26,000	5,800	8,500	3000K	75
64582	MP100PAR38/U/FL35/ECO[5,6]	100	M90/O	35°/12,000	5,800	8,500	3000K	75
64584	MP100PAR38/U/VWFL65/ECO[5,6]	100	M90/O	65°/4500	5,800	8,500	3000K	75
64593	MP150PAR38/U/SP20/ECO[5,6]	150	M102/O	20°/34,000	8,800	8,500	3200K	75
64597	MP150PAR38/U/FL35/ECO[5,6]	150	M102/O	35°/17,000	8,800	8,500	3200K	75
64599	MP150PAR38/U/VWFL65/ECO[5,6]	150	M102/O	65°/7500	8,800	8,500	3200K	75

Notes:
1. Average rated life based on 10 hours per start operating on an ANSI ballast.
2. All 50, 70, 100, 150 and 175 watt lamps must be operated in a 4000V pulse rated socket.
3. TCLP claims based on OSRAM SYLVANIA's TCLP test protocol. Some states and localities have lower limits than the Federal TCLP standard and have different disposal regulations for mercury containing lamps.
4. For higher CRI, use SYLVANIA METALARC POWERBALL® CERAMIC lamps.
5. All PAR38 lamps listed above have an E26 medium skirt base. Note this base is not compatible with exclusionary medium sockets.
6. See Beam Spread Design Guide for footcandle diagrams.

O = Lamps classified as O-type comply with ANSI Standard C78.389 for containment testing and may be used in open luminaires. See lamp warning.
E = Lamps classified as E-type are to be used only in suitably rated enclosed luminaires.

Ordering Guide

E17

MP	**50**	**/**	**—**	**/**	**U**	**/**	**MED**
MP=METALARC PRO-TECH® For Open and Enclosed Fixture M=METALARC® MS=METALARC Super For Enclosed Fixture Only	Wattage: 50, 70, 100, 150, 175		Finish _ = Clear C = Coated		Operating Position: U = Universal BU-ONLY = Base Up Only		Base: MED = Medium

PAR38

MP	**70**	**PAR38**	**/**	**U**	**/**	**SP**	**20**	**/**	**ECO**
MP=METALARC PRO-TECH Open and Enclosed Fixture	Wattage: 70, 100, 150	Bulb Shape PAR38		Operating Position: U = Universal		Beam Spread SP = Spot FL = Flood VWFL = Very Wide Flood	Beam Angle 20 = 20° 35 = 35° 65 = 65°		ECOLOGIC®

Technical Information

Typical Lumen Maintenance Curve

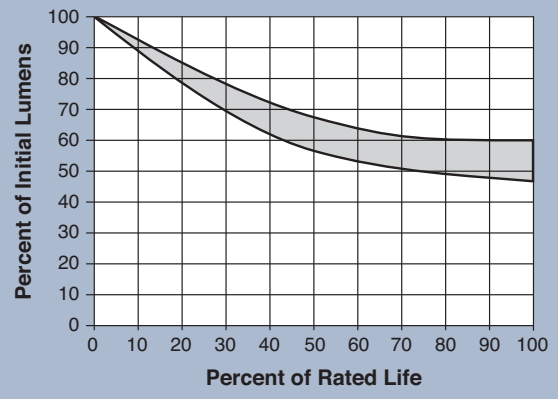

Typical Survival Curve

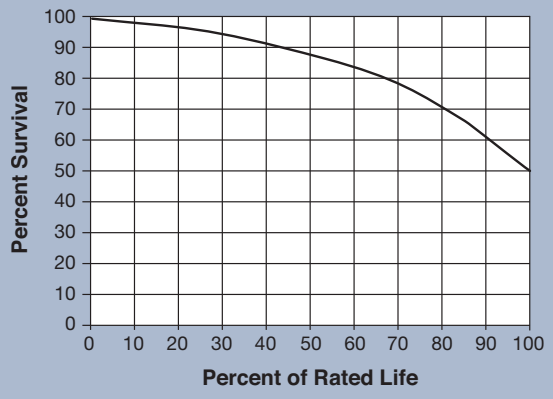

Lamp Dimensions

E17

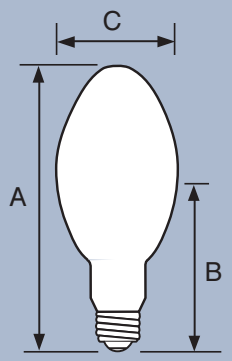

PAR38

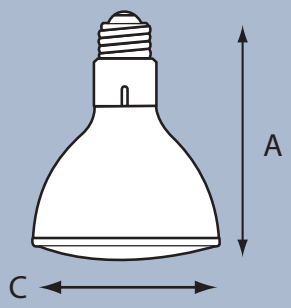

Bulb Shape	(A) MOL	(B) LCL	(C) Diameter
E17	5.4" (137.2mm)	3.4" (86.4mm)	2.1" (53.3mm)
PAR38	5.3" (134.6mm)	N/A	4.75" (120.7mm)

Expanded Line of SYLVANIA METALARC PRO-TECH and PULSE START lamps

In addition to the line of METALARC PRO-TECH lamps listed, OSRAM SYLVANIA offers a line of METALARC POWERBALL® CERAMIC, METALARC PULSE START and METALARC SUPERSAVER® lamps for use in open and or enclosed rated fixtures. Please visit SYLVANIA.com for more information and download a copy of the latest Product Information Bulletin.

Exclusionary Socket for METALARC PRO-TECH® Lamps

Medium Based Dedicated Socket Comparison

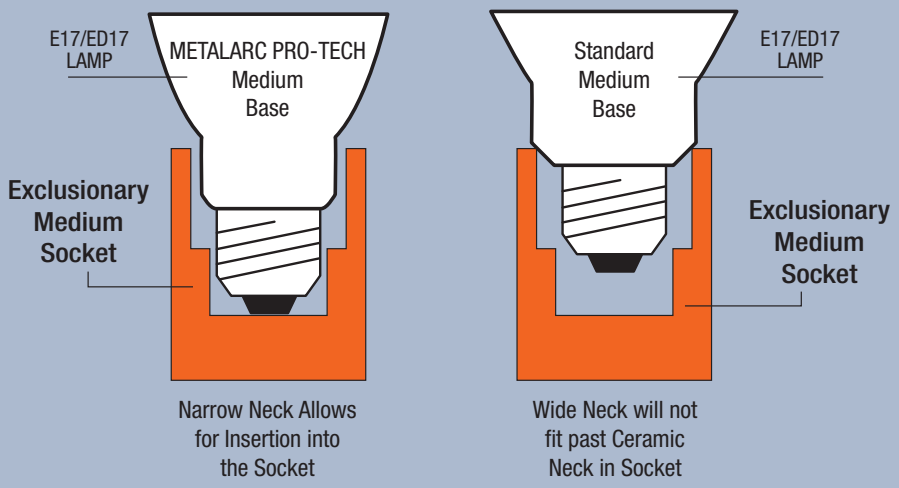

National Electric Code 2005 and later revision require new construction and/or major renovations to use exclusionary sockets in open fixtures, or fixture with a lens.

WARNING: This lamp can cause serious skin burn and eye inflammation from shortwave Ultraviolet radiation if the outer envelope of the lamp is broken or punctured. Do not use where people will remain for more than a few minutes unless adequate shielding or other safety precautions are used. Lamps that will automatically extinguish when the outer envelope is broken or punctured are commercially available.

Sample Specification

METALARC PRO-TECH PULSE START
Lamp(s) shall be (a) METALARC PRO-TECH PULSE START Lamp(s) constructed with an arc tube shroud and shall be designed for open fixture operation and reduced UV output.

METALARC® PULSE START
Lamp(s) shall be (a) 150W METALARC PULSE START lamp(s) exhibiting initial lumens of 14,000 with a 60% mean lumen maintenance and capable of operating on a M102/E ballast. Lamp construction shall include a lead-free welded base.

METALARC PRO-TECH PULSE START PAR38/ECO®
Lamp(s) shall be (a) METALARC PRO-TECH PULSE START PAR38/ECO lamp(s) for use in open or enclosed luminaires with an 8,500-hour average rated life. Lamp(s) shall exhibit a correlated color temperature of 3200K, a maximum color shift of ±200K over life, and a CRI of 75. Lamp(s) shall pass the existing Federal TCLP limits.

United States
OSRAM SYLVANIA
100 Endicott Street
Danvers, MA 01923

Trade
Phone: 1-800-255-5042
Fax: 1-800-255-5043

National Accounts
Phone: 1-800-562-4671
Fax: 1-800-562-4674

OEM/Special Markets
Phone: 1-800-762-7191
Fax: 1-800-762-7192

Display/Optic
Phone: 1-888-677-2627
Fax: 1-800-762-7192

Canada
OSRAM SYLVANIA LTD.
2001 Drew Road
Mississauga, ON L5S 1S4

Trade
Phone: 1-800-263-2852
Fax: 1-800-667-6772

OEM/Special Markets/Display/Optic
Phone: 1-800-265-2852
Fax: 1-800-667-6772

www.sylvania.com

© 2011 OSRAM SYLVANIA 5/11 Photography © Michael Bernard/P.I.Corp

SYLVANIA, ECO, ECOLOGIC, METALARC, METALARC PRO-TECH and SUPERSAVER are registered trademarks of OSRAM SYLVANIA Inc.
SEE THE WORLD IN A NEW LIGHT is a registered trademark of OSRAM SYLVANIA Inc.
POWERBALL is a registered trademark of OSRAM GmbH.

Submitting Agency:	Description: XB.W2.5342100 Project: WWTP IMPVT'S WENATCHEE Notes:	Type:
jcwrightlighting phone: 509-535-0098		A1

traxon

Wall Washer Shield XB WW

Photometrics

Photometric data based on Washer Shield AC

SOURCE SPECIFICATIONS

Source: High intensity power light emitting diodes 36 LEDs

Optics: 30°

Cover Lens: Clear glass cover

Distribution: Asymmetric direct illumination

CCT: 2700 K - Warm white

CANDELA DISTRIBUTION

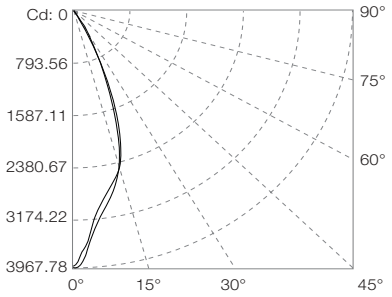

LIGHT OUTPUT

Color	Luminous Flux (lumens)
White	1664.22

ILLUMINANCE AT A DISTANCE

	Center Beam LUX	Beam Width V	Beam Width H
2m	991.90	1.4m	1.4m
4m	247.98	2.7m	2.8m
6m	110.21	4.1m	4.3m
8m	61.99	5.4m	5.7m
10m	39.68	6.8m	7.1m
12m	27.55	8.1m	8.5m

For fc divide by 10.7

Vert.Spread: 37.5°
Horiz.Spread: 39.1°
For feet multiply by 3.28

WWW.TRAXONTECHNOLOGIES.COM

© 2010 TRAXON TECHNOLOGIES ALL RIGHTS RESERVED. TRAXON™, TX CONNECT™, LUXILED™ ARE TRADEMARKS OF TRAXON TECHNOLOGIES. U.S. PATENTS, E.U. PATENTS, JAPAN PATENTS, OTHER PATENTS PENDING. SPECIFICATIONS ARE SUBJECT TO CHANGE WITHOUT NOTICE.

Submitting Agency:	Description: XB.W2.5342100 Project: WWTP IMPVT'S WENATCHEE Notes:	Type:
jcwrightlighting phone: 509-535-0098		A1

traxon

Wall Washer Shield XB WW

Dimensions

TECHNICAL DRAWING

Wall Washer Shield XB-18

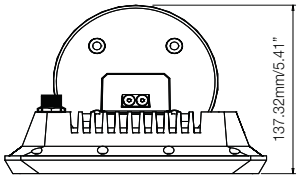

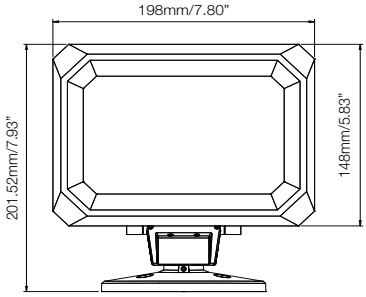

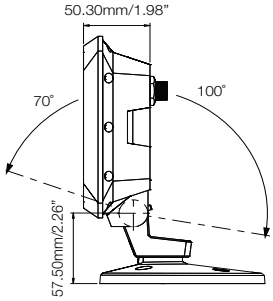

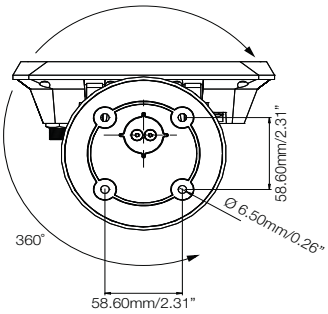

WWW.TRAXONTECHNOLOGIES.COM

© 2010 TRAXON TECHNOLOGIES ALL RIGHTS RESERVED. TRAXON™, TX CONNECT™, LUXILED™ ARE TRADEMARKS OF TRAXON TECHNOLOGIES. U.S. PATENTS, E.U. PATENTS, JAPAN PATENTS, OTHER PATENTS PENDING. SPECIFICATIONS ARE SUBJECT TO CHANGE WITHOUT NOTICE.

Submitting Agency:	Description: XB.W2.5342100 Project: WWTP IMPVT'S WENATCHEE Notes:	Type: A1
jcwrightlighting phone: 509-535-0098		

traxon

Wall Washer Shield XB WW

Dimensions

TECHNICAL DRAWING

Wall Washer Shield XB-36

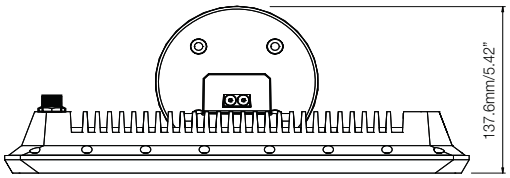

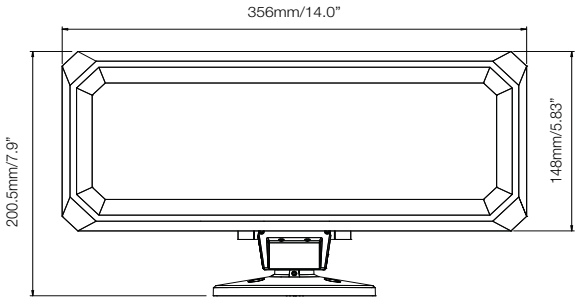

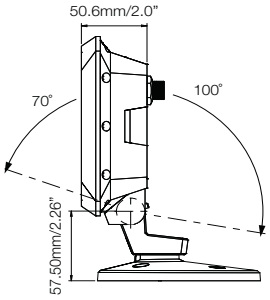

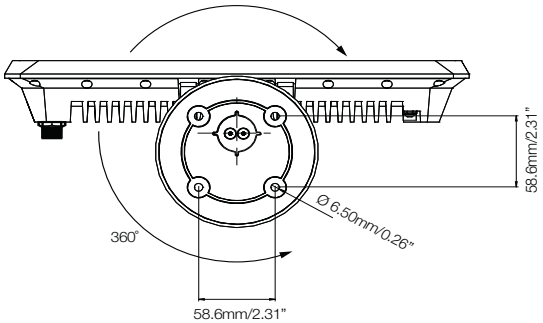

WWW.TRAXONTECHNOLOGIES.COM

© 2010 TRAXON TECHNOLOGIES ALL RIGHTS RESERVED. TRAXON™, TX CONNECT™, LUXILED™ ARE TRADEMARKS OF TRAXON TECHNOLOGIES. U.S. PATENTS, E.U. PATENTS, JAPAN PATENTS, OTHER PATENTS PENDING. SPECIFICATIONS ARE SUBJECT TO CHANGE WITHOUT NOTICE.

Submitting Agency:	Description: XB.W2.5342100 Project: WWTP IMPVT'S WENATCHEE Notes:	Type: A1
jcwrightlighting phone: 509-535-0098		

traxon

Wall Washer Shield XB WW

Mounting

MOUNTING

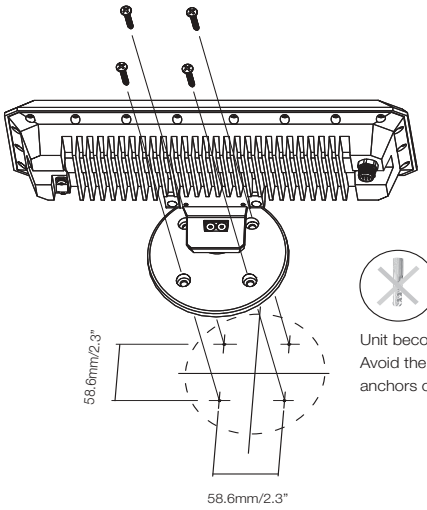

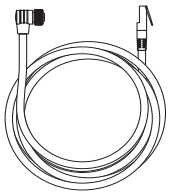

TX Connect XB Indoor/Outdoor
Bridge Cable 3m/9.9ft (included)
(XE.AC.0000100)

Unit becomes hot during operation.
Avoid the use of plastic expansion
anchors or wall plugs for mounting.

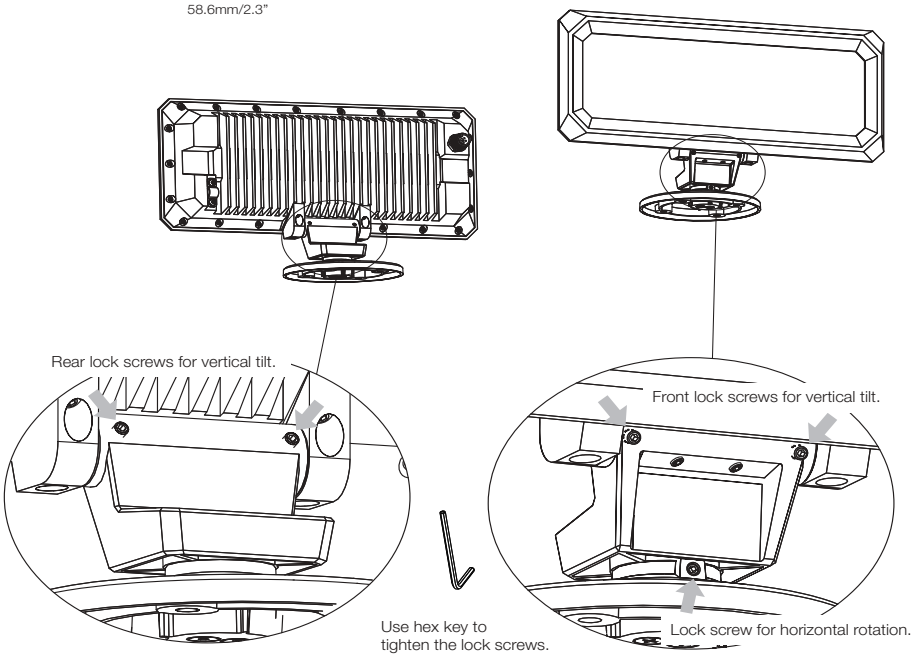

Attention: Glass top cover— Please take care when handling unit to avoid breakage and injury.

WWW.TRAXONTECHNOLOGIES.COM

© 2010 TRAXON TECHNOLOGIES ALL RIGHTS RESERVED. TRAXON™, TX CONNECT™, LUXILED™ ARE TRADEMARKS OF TRAXON TECHNOLOGIES. U.S. PATENTS, E.U. PATENTS, JAPAN PATENTS, OTHER PATENTS PENDING. SPECIFICATIONS ARE SUBJECT TO CHANGE WITHOUT NOTICE.

Submitting Agency:	Description: XB.W2.5342100 Project: WWTP IMPVT'S WENATCHEE Notes:	Type:
jcwrightlighting phone: 509-535-0098		A1

traxon

Wall Washer Shield XB WW

System Diagram

SYSTEM DIAGRAM

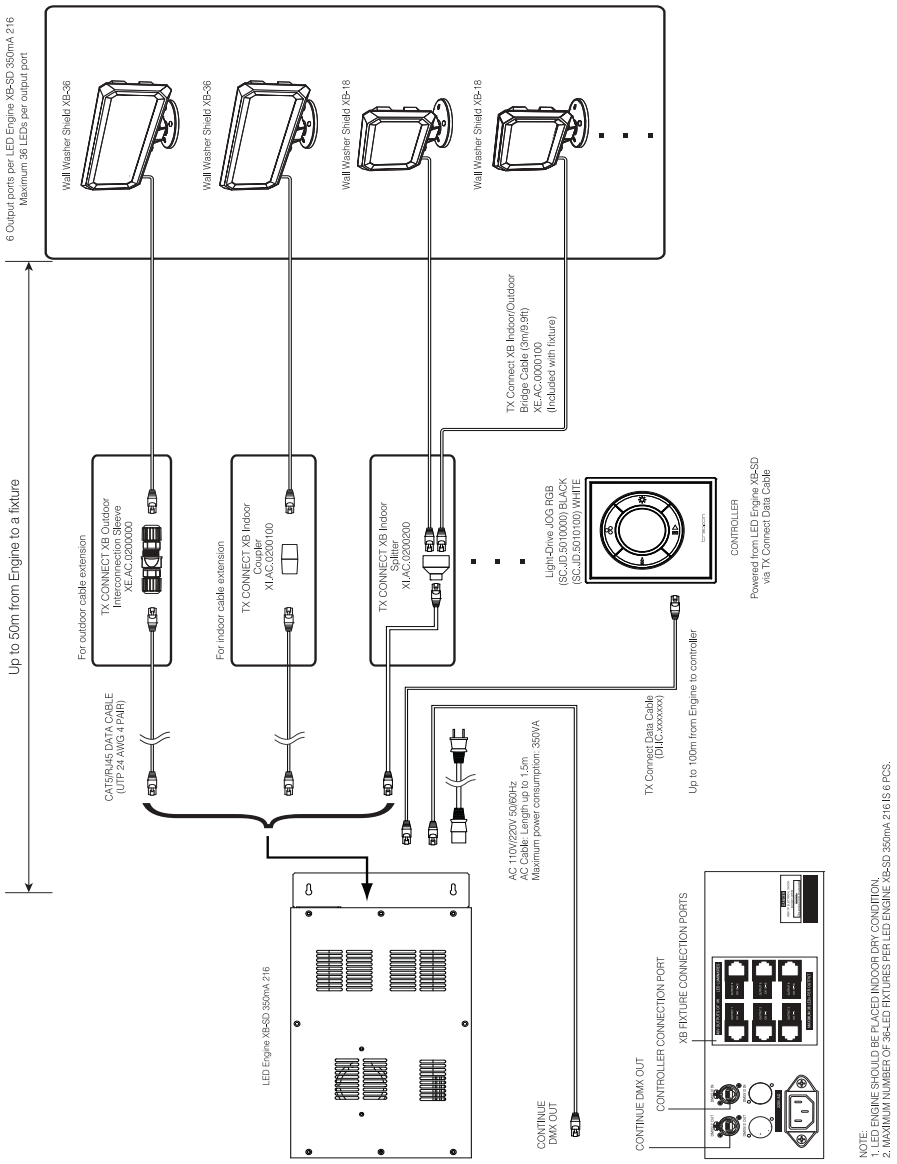

WWW.TRAXONTECHNOLOGIES.COM

© 2010 TRAXON TECHNOLOGIES ALL RIGHTS RESERVED. TRAXON™, TX CONNECT™, LUXILED™ ARE TRADEMARKS OF TRAXON TECHNOLOGIES. U.S. PATENTS, E.U. PATENTS, JAPAN PATENTS, OTHER PATENTS PENDING. SPECIFICATIONS ARE SUBJECT TO CHANGE WITHOUT NOTICE.

Submitting Agency:	Description: XB.W2.5342100 Project: WWTP IMPVT'S WENATCHEE Notes:	Type: A1
jcwrightlighting phone: 509-535-0098		

traxon

Wall Washer Shield XB WW

Accessories

MODEL NUMBER

X B .W x . 5 x x x x x x

- Version number
- Cover: 1 = Clear
- Beam angle: 1 = 10°, 2 = 20°, 3 = 30°, 4 = 40x10°, 5 = Open beam, 6 = 40°
- Color: 7 = Warm white
- Environment: 3 = IP66
- LED type: 5 = 350mA
- Number of LEDs: F = 18 LEDs, G = 36 LEDs

STANDARD ACCESSORIES (included in delivery)

Model No.	Description
	TX CONNECT XB Indoor/Outdoor Bridge Cable, 3m/9.9ft

TX CONTROL

Model No.	Description
CS.MA.5000000	Micro Server
SC.CD.5080000	Light-Drive Jog DW (Black)
SC.CD.5080100	Light-Drive Job DW (White)

TX CONNECT

Model No.	Description
XI.IC.1000000	TX CONNECT XB Interconnection Cable (10m/32.8ft)
XI.IC.2000000	TX CONNECT XB Interconnection Cable (20m/65.6ft)
XI.AC.0200200	TX CONNECT XB Splitter
XI.AC.0200100	TX CONNECT XB Coupler
XE.AC.0200000	TX CONNECT XB Outdoor Interconnection Sleeve
DI.IC.0020000	TX CONNECT Data Cable (20cm/0.65ft)
DI.IC.0100000	TX CONNECT Data Cable (1m/3.28ft)
DI.IC.0300000	TX CONNECT Data Cable (3m/9.84ft)
DI.IC.0500000	TX CONNECT Data Cable (5m/16.4ft)
DI.IC.1000000	TX CONNECT Data Cable (10m/32.8ft)
DI.IC.2000000	TX CONNECT Data Cable (20m/65.6ft)

TX POWER

Model No.	Description
PX.IC.5060100	LED Engine XB-SD 350mA 216 220V
PX.IC.5060200	LED Engine XB-SD 350mA 216 110V
PX.ID.5120100	LED Engine XB-SD Rackmount 350mA 432 220V
PX.ID.5120200	LED Engine XB-SD Rackmount 350mA 432 110V
PS.AC.0000x00	AC Power Cord (2m/6.6ft); 1=EU, 2=US, 3=UK, 4=AU, 5=JP

© 2010 TRAXON TECHNOLOGIES ALL RIGHTS RESERVED. TRAXON™, TX CONNECT™, LUXILED™ ARE TRADEMARKS OF TRAXON TECHNOLOGIES. U.S. PATENTS, E.U. PATENTS, JAPAN PATENTS, OTHER PATENTS PENDING. SPECIFICATIONS ARE SUBJECT TO CHANGE WITHOUT NOTICE.

Submitting Agency:	Description: XB.W2.5361100 Project: WWTP IMPVT'S WENATCHEE Notes:	Type:
jcwrightlighting phone: 509-535-0098		A2

traxon

Wall Washer Shield AC XB CW

XB.W1.xxxxxxx
XB.W2.xxxxxxx

The Wall Washer Shield AC XB CW is an IP66-rated, AC line input, lighting fixture equipped with high-brightness LEDs that generates a cold white for a rich wall-washing effect. This fixture is suitable for indoor or outdoor use and equipped with a variety of beam angles, and lenses.

LUXEON Lighting Network

CE c ETL us

IP66

PRODUCT SPECIFICATIONS

- **Light Source:** W1: 18 High intensity power LEDs
  W2: 36 High intensity power LEDs
- **Color Temperature:** Cold white - 6500 K
- **Beam Angle:** 10°, 20°, 30°, 40°, 40°x10°, open beam
- **Luminous Flux[1]:** W1: 1292 lm (30° optics)
  W2: 2583 lm (30° optics)
- **Efficacy[2]:** W1: 46.1 lm/W (30° optics)
  W2: 48.7 lm/W (30° optics)
- **Cover Lens:** Clear tempered glass
- **Housing:** Aluminium die cast
- **Adjustment Options:** 360° (horizontal), 135° (vertical)
- **Size:** W1: 222mm (W) x 255mm (H) x 128mm (D) / 8.74" (W) x 10" (H) x 5" (D)
  W2: 356mm (W) x 255mm (H) x 128mm (D) / 14" (W) x 10" (H) x 5" (D)
- **Weight:** W1: 3.3kg/7.3lbs
  W2: 4.3kg/9.5lbs
- **Regulatory Listing & Safety Approval:** CE, cETLus
- **Operating Temperature[3]:** −40°C to +60°C / −40°F to +140°F
- **Storage Temperature:** −40°C to +70°C / −40°F to +158°F
- **Environment:** Outdoor (IP66)
- **Humidity:** 85%, non-condensing

ELECTRICAL SPECIFICATIONS

- **Input Voltage:** 100-240V AC 50/60Hz
- **Power Consumption:** W1: 28W max.
  W2: 53W max.
- **LED Current:** 350mA DC

SYSTEM SPECIFICATIONS

- **Power/Data Interface:** AC line; DMX512 on RJ45
- **Control:** DMX512
- **Power Supply:** Built-in

1. Typical luminous flux value. Actual flux will vary according to optics used.
2. Efficacy based on typical luminous flux value and maximum power consumption.
3. Startup temperature: −20°C/−4°F.

LED CHARACTERISTICS Because LEDs are semiconductor devices, their performances are subject to inherent variability commonly found in semiconductor industry. To improve consistency in performance across the same product, LED manufacturers "sort" LEDs into bins according to different preset parameters, such as forward driving voltage, illumination, etc. Whereas binning is a sorting function, it is not a correction process. Inherent variability in the manufacturing process results always in different binning distributions according to different production lots. Traxon uses automatically binned LEDs on its products, thereby minimizing output variations within the model range.

As with all electronic devices, LED output degrades over time – a term called lumen depreciation. This also explains why it is nearly impossible to expect photometric performances of two LED products with different service life spans to be the same. The rate of LED degrade is a complicate function of many factors such as operating efficiency, duration of continuous operation, and more significantly, environmental conditions (ambient temperature for example). If allowed working under optimal operating temperature range and with good ventilation, LED devices enjoy long service lives over conventional light sources. When using/installing LED devices, care should be taken to ensure that the devices will operate within the operating conditions specified in respective product literature.

WWW.TRAXONTECHNOLOGIES.COM

© 2010 TRAXON TECHNOLOGIES ALL RIGHTS RESERVED. TRAXON™, TX CONNECT™, LUXILED™ ARE TRADEMARKS OF TRAXON TECHNOLOGIES. U.S. PATENTS, E.U. PATENTS, JAPAN PATENTS, OTHER PATENTS PENDING. SPECIFICATIONS ARE SUBJECT TO CHANGE WITHOUT NOTICE.

Submitting Agency:	Description: XB.W2.5361100 Project: WWTP IMPVT'S WENATCHEE Notes:	Type:
jcwrightlighting phone: 509-535-0098		A2

traxon

Wall Washer Shield AC XB CW

Photometrics

SOURCE SPECIFICATIONS

Source: 36 LEDs, 350mA

Optics: 30°

Cover Lens: Clear glass cover

CCT: 6500 K - Cold white

CANDELA DISTRIBUTION

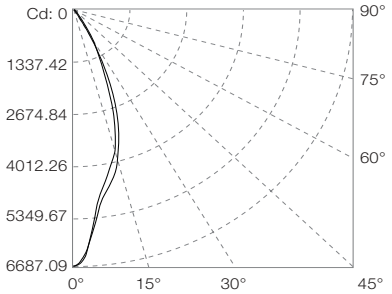

LIGHT OUTPUT

Color	Luminous Flux (lumens)
White	2582.55

ILLUMINANCE AT A DISTANCE

	Center Beam LUX	Beam Width V	Beam Width H
2m	1671.77	1.2m	1.3m
4m	417.94	2.4m	2.6m
6m	185.75	3.7m	3.9m
8m	104.49	4.9m	5.2m
10m	66.87	6.1m	6.5m
12m	46.44	7.3m	7.8m

For fc divide by 10.7

Vert.Spread: 33.9°
Horiz.Spread: 35.9°
For feet multiply by 3.28

WWW.TRAXONTECHNOLOGIES.COM

© 2010 TRAXON TECHNOLOGIES ALL RIGHTS RESERVED. TRAXON™, TX CONNECT™, LUXILED™ ARE TRADEMARKS OF TRAXON TECHNOLOGIES. U.S. PATENTS, E.U. PATENTS, JAPAN PATENTS, OTHER PATENTS PENDING. SPECIFICATIONS ARE SUBJECT TO CHANGE WITHOUT NOTICE.

Submitting Agency:	Description: XB.W2.5361100 Project: WWTP IMPVT'S WENATCHEE Notes:	Type:
jcwrightlighting phone: 509-535-0098		A2

traxon

Wall Washer Shield AC XB CW

Dimensions

TECHNICAL DRAWING

Wall Washer Shield AC XB-18

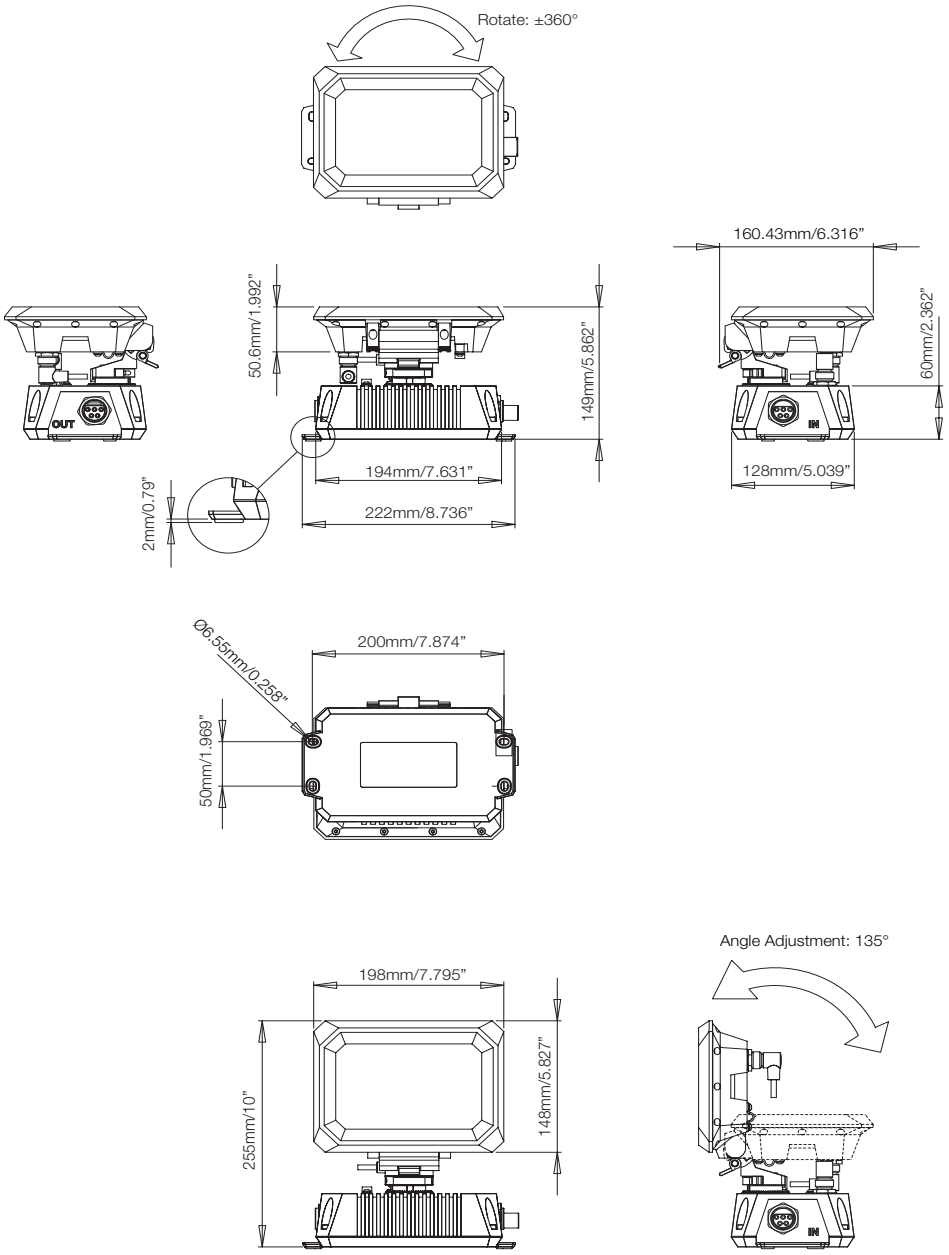

WWW.TRAXONTECHNOLOGIES.COM

© 2010 TRAXON TECHNOLOGIES ALL RIGHTS RESERVED. TRAXON™, TX CONNECT™, LUXILED™ ARE TRADEMARKS OF TRAXON TECHNOLOGIES. U.S. PATENTS, E.U. PATENTS, JAPAN PATENTS, OTHER PATENTS PENDING. SPECIFICATIONS ARE SUBJECT TO CHANGE WITHOUT NOTICE.

Submitting Agency:	Description: XB.W2.5361100 Project: WWTP IMPVT'S WENATCHEE Notes:	Type:
jcwrightlighting phone: 509-535-0098		A2

traxon

Wall Washer Shield AC XB CW

Dimensions

TECHNICAL DRAWING

Wall Washer Shield AC XB-36

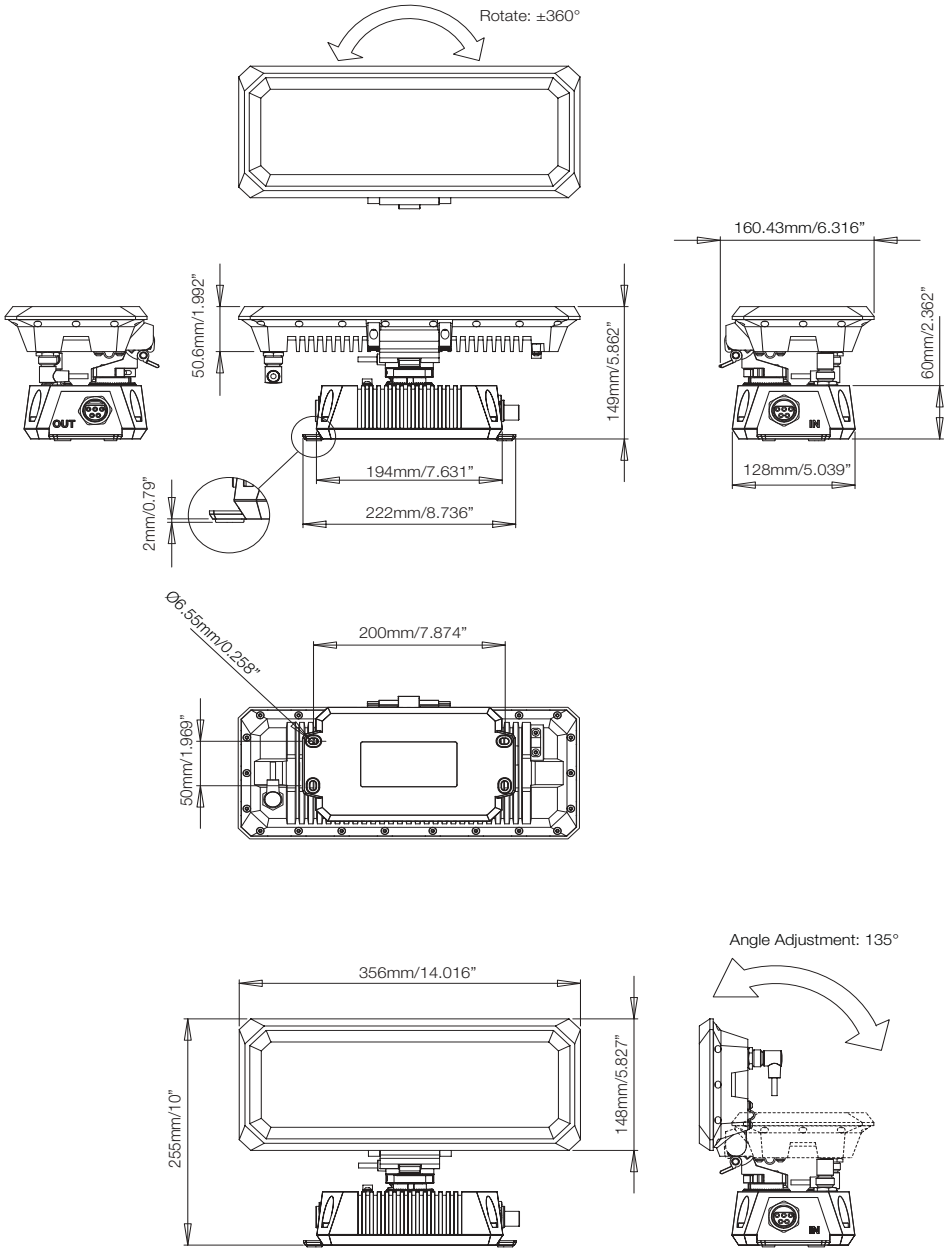

WWW.TRAXONTECHNOLOGIES.COM

© 2010 TRAXON TECHNOLOGIES ALL RIGHTS RESERVED. TRAXON™, TX CONNECT™, LUXILED™ ARE TRADEMARKS OF TRAXON TECHNOLOGIES. U.S. PATENTS, E.U. PATENTS, JAPAN PATENTS, OTHER PATENTS PENDING. SPECIFICATIONS ARE SUBJECT TO CHANGE WITHOUT NOTICE.

Submitting Agency:	Description: XB.W2.5361100 Project: WWTP IMPVT'S WENATCHEE Notes:	Type: A2
jcwrightlighting phone: 509-535-0098		

traxon

Wall Washer Shield AC XB CW

Mounting

MOUNTING

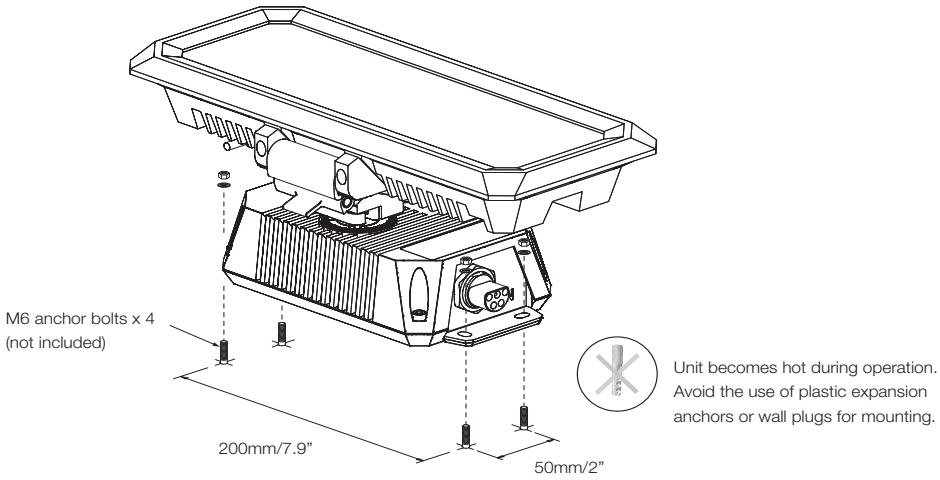

Attention: Glass top cover— Please take care when handling unit to avoid breakage and injury.

WWW.TRAXONTECHNOLOGIES.COM

© 2010 TRAXON TECHNOLOGIES ALL RIGHTS RESERVED. TRAXON™, TX CONNECT™, LUXILED™ ARE TRADEMARKS OF TRAXON TECHNOLOGIES. U.S. PATENTS, E.U. PATENTS, JAPAN PATENTS, OTHER PATENTS PENDING. SPECIFICATIONS ARE SUBJECT TO CHANGE WITHOUT NOTICE.

Submitting Agency:	Description: **XB.W2.5361100**	Type:
jcwrightlighting phone: 509-535-0098	Project: **WWTP IMPVT'S WENATCHEE**	**A2**
	Notes:	

traxon

Wall Washer Shield AC XB CW

System Diagram

SYSTEM DIAGRAM

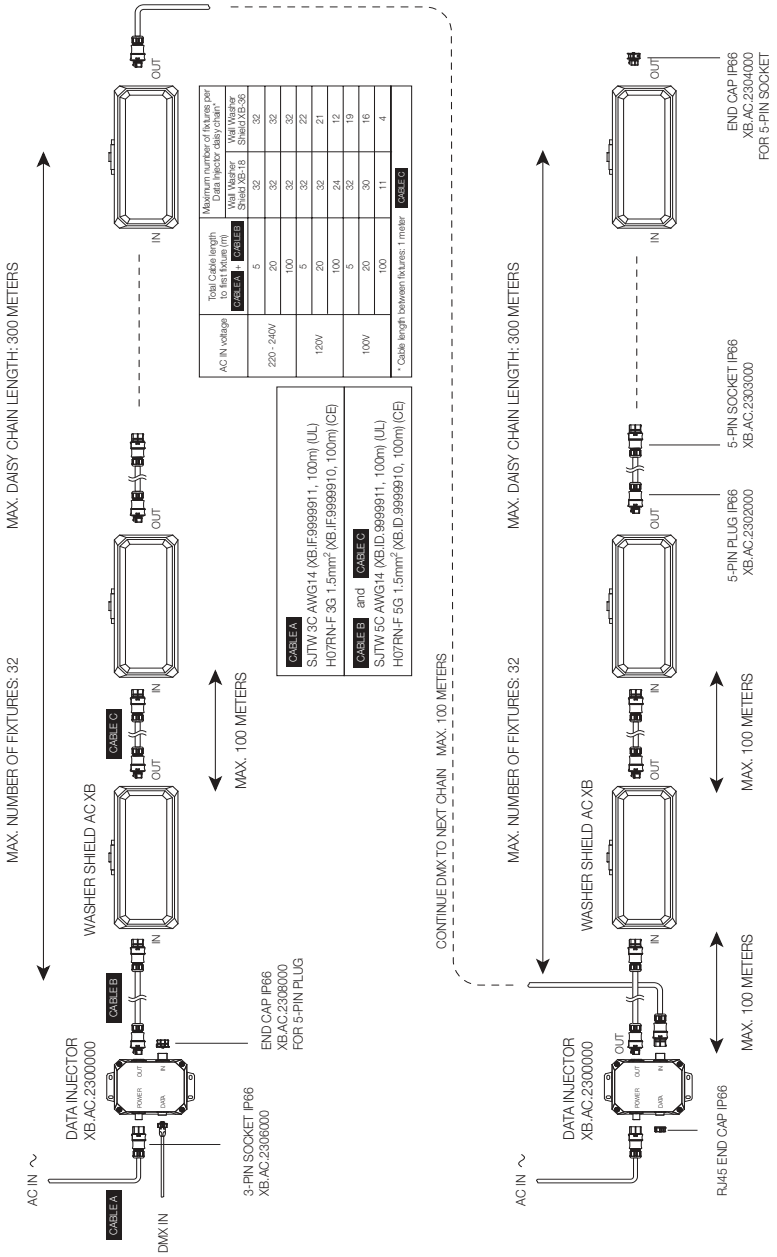

AC IN voltage	Total Cable length to first fixture (m) CABLE A	CABLE B	Maximum number of fixtures per Data Injector daisy chain* Wall Washer Shield XB-18	Wall Washer Shield XB-36
220 - 240V	5		32	32
	20		32	32
	100		32	32
120V	5		32	22
	20		32	21
	100		24	12
100V	5		32	19
	20		30	16
	100		11	4
* Cable length between fixtures: 1 meter			CABLE C	

WWW.TRAXONTECHNOLOGIES.COM

© 2010 TRAXON TECHNOLOGIES ALL RIGHTS RESERVED. TRAXON™, TX CONNECT™, LUXILED™ ARE TRADEMARKS OF TRAXON TECHNOLOGIES. U.S. PATENTS, E.U. PATENTS, JAPAN PATENTS, OTHER PATENTS PENDING. SPECIFICATIONS ARE SUBJECT TO CHANGE WITHOUT NOTICE.

Submitting Agency:	Description: XB.W2.5361100 Project: WWTP IMPVT'S WENATCHEE Notes:	Type:
jcwrightlighting phone: 509-535-0098		A2

traxon

Wall Washer Shield AC XB CW

Accessories

MODEL NUMBER

X B . W x . 5 3 6 x x x x

- Version number
- Cover: 1 = Clear
- Beam angle: 1 = 10°, 2 = 20°, 3 = 30°, 4 = 40x10°, 5 = Open beam, 6 = 40°
- Color: 6 = Cold white
- Environment: 3 = IP66
- LED type: 5 = 350mA
- Number of LEDs: 1 = 18 LEDs, 2 = 36 LEDs

STANDARD ACCESSORIES (included in delivery)

Model No.	Description
	TX CONNECT XB CMX Interconnection Cable, 300mm/11.8" (Base to head connection cable)

TX CONTROL

Model No.	Description
CS.MA.5000000	Micro Server
SC.JD.5080000	Light-Drive Jog DW (Black)
SC.JD.5080100	Light-Drive Jog DW (White)

TX CONNECT

Model No.	Description
XB.AC.2302000	5-Pin Field Installable Connector Plug IP66
XB.AC.2303000	5-Pin Field Installable Connector Socket IP66
XB.AC.2304000	5-Pin Connector Socket End Cap IP66
XB.AC.2308000	5-Pin Connector Plug End Cap IP66
DE.AC.0100000	RJ45 Male Connector Housing IP67, Field Installable
XB.AC.0000030	Standalone base for Wall Washer Unit
XE.ID.9999910	AC XB Interconnection Cable, 5-wire, CE (100m/328ft reel)
XE.ID.9999911	AC XB Interconnection Cable, 5-wire, UL (100m/328ft reel)

TX POWER

Model No.	Description
XB.AC.2300000	XB Shield AC Data Injector
XE.IF.9999910	AC XB Power Cable, 3-wire, CE (100m/328ft reel)
XE.IF.9999911	AC XB Power Cable, 3-wire, UL (100m/328ft reel)
XB.AC.2306000	3-pin Field Installable Connector Socket IP66

© 2010 TRAXON TECHNOLOGIES ALL RIGHTS RESERVED. TRAXON™, TX CONNECT™, LUXILED™ ARE TRADEMARKS OF TRAXON TECHNOLOGIES. U.S. PATENTS, E.U. PATENTS, JAPAN PATENTS, OTHER PATENTS PENDING. SPECIFICATIONS ARE SUBJECT TO CHANGE WITHOUT NOTICE.

Submitting Agency:	Description: XB.W2.5386100 Project: WWTP IMPVT'S WENATCHEE Notes:	Type: A3
jcwrightlighting phone: 509-535-0098		

traxon

Wall Washer Shield AC XB DW

XB.W1.xxxxxxx
XB.W2.xxxxxxx

The Wall Washer Shield AC XB DW is an IP66-rated, AC line input, lighting fixture equipped with high-brightness LEDs that generates a dynamic white for a rich wall-washing effect. This fixture is suitable for indoor or outdoor use and equipped with a variety of beam angles, and lenses.

LUXEON Lighting Network

CE c ETL us

IP66

PRODUCT SPECIFICATIONS

- **Light Source:** W1: 18 High intensity power LEDs
  W2: 36 High intensity power LEDs
- **Color Temperature:** Dynamic white - 2700 K - 6500 K
- **Beam Angle:** 10°, 20°, 30°, 40°, 40°x10°, open beam
- **Luminous Flux[1]:** W1: 943 lm (30° optics)
  W2: 1886 lm (30° optics)
- **Efficacy[2]:** W1: 33.7 lm/W (30° optics)
  W2: 35.6 lm/W (30° optics)
- **Cover Lens:** Clear tempered glass
- **Housing:** Aluminium die cast
- **Adjustment Options:** 360° (horizontal), 135° (vertical)
- **Size:** W1: 222mm (W) x 255mm (H) x 128mm (D) / 8.74" (W) x 10" (H) x 5" (D)
  W2: 356mm (W) x 255mm (H) x 128mm (D) / 14" (W) x 10" (H) x 5" (D)
- **Weight:** W1: 3.3kg/7.3lbs
  W2: 4.3kg/9.5lbs
- **Regulatory Listing & Safety Approval:** CE, cETLus
- **Operating Temperature[3]:** −40°C to +60°C / −40°F to +140°F
- **Storage Temperature:** −40°C to +70°C / −40°F to +158°F
- **Environment:** Outdoor (IP66)
- **Humidity:** 85%, non-condensing

ELECTRICAL SPECIFICATIONS

- **Input Voltage:** 100-240V AC 50/60Hz
- **Power Consumption:** W1: 28W max.
  W2: 53W max.
- **LED Current:** 350mA DC

SYSTEM SPECIFICATIONS

- **Power/Data Interface:** AC line; DMX512 on RJ45
- **Control:** DMX512
- **Power Supply:** Built-in

1. Typical luminous flux value. Actual flux will vary according to optics used.
2. Efficacy based on typical luminous flux value and maximum power consumption.
3. Startup temperature: −20°C/−4°F.

LED CHARACTERISTICS Because LEDs are semiconductor devices, their performances are subject to inherent variability commonly found in semiconductor industry. To improve consistency in performance across the same product, LED manufacturers "sort" LEDs into bins according to different preset parameters, such as forward driving voltage, illumination, etc. Whereas binning is a sorting function, it is not a correction process. Inherent variability in the manufacturing process results always in different binning distributions according to different production lots. Traxon uses automatically binned LEDs on its products, thereby minimizing output variations within the model range.

As with all electronic devices, LED output degrades over time – a term called lumen depreciation. This also explains why it is nearly impossible to expect photometric performances of two LED products with different service life spans to be the same. The rate of LED degrade is a complicate function of many factors such as operating efficiency, duration of continuous operation, and more significantly, environmental conditions (ambient temperature for example). If allowed working under optimal operating temperature range and with good ventilation, LED devices enjoy long service lives over conventional light sources. When using/installing LED devices, care should be taken to ensure that the devices will operate within the operating conditions specified in respective product literature.

WWW.TRAXONTECHNOLOGIES.COM

© 2010 TRAXON TECHNOLOGIES ALL RIGHTS RESERVED. TRAXON™, TX CONNECT™, LUXILED™ ARE TRADEMARKS OF TRAXON TECHNOLOGIES. U.S. PATENTS, E.U. PATENTS, JAPAN PATENTS, OTHER PATENTS PENDING. SPECIFICATIONS ARE SUBJECT TO CHANGE WITHOUT NOTICE.

Submitting Agency:	Description: XB.W2.5386100 Project: WWTP IMPVT'S WENATCHEE Notes:	Type:
jcwrightlighting phone: 509-535-0098		A3

traxon

Wall Washer Shield AC XB DW

Photometrics

SOURCE SPECIFICATIONS

Source: 36 LEDs, 350mA

Optics: 30°

Cover Lens: Clear glass cover

CCT: 2700 K - 6500 K - Dynamic white

CANDELA DISTRIBUTION

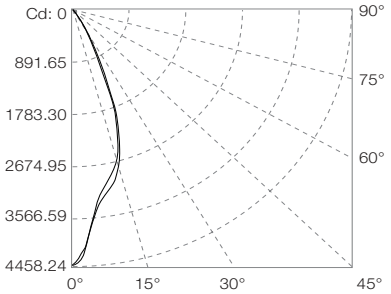

LIGHT OUTPUT

Color	Luminous Flux (lumens)
White	1885.87

ILLUMINANCE AT A DISTANCE

	Center Beam LUX	Beam Width V	Beam Width H
2m	1114.56	1.4m	1.4m
4m	278.64	2.7m	2.8m
6m	123.84	4.1m	4.2m
8m	69.66	5.5m	5.6m
10m	44.58	6.8m	7.0m
12m	30.96	8.2m	8.4m

For fc divide by 10.7

Vert.Spread: 37.7°
Horiz.Spread: 38.8°
For feet multiply by 3.28

WWW.TRAXONTECHNOLOGIES.COM

© 2010 TRAXON TECHNOLOGIES ALL RIGHTS RESERVED. TRAXON™, TX CONNECT™, LUXILED™ ARE TRADEMARKS OF TRAXON TECHNOLOGIES. U.S. PATENTS, E.U. PATENTS, JAPAN PATENTS, OTHER PATENTS PENDING. SPECIFICATIONS ARE SUBJECT TO CHANGE WITHOUT NOTICE.

Submitting Agency:	Description: XB.W2.5386100 Project: WWTP IMPVT'S WENATCHEE Notes:	Type:
jcwrightlighting phone: 509-535-0098		A3

traxon

Wall Washer Shield AC XB DW

Dimensions

TECHNICAL DRAWING

Wall Washer Shield AC XB-18

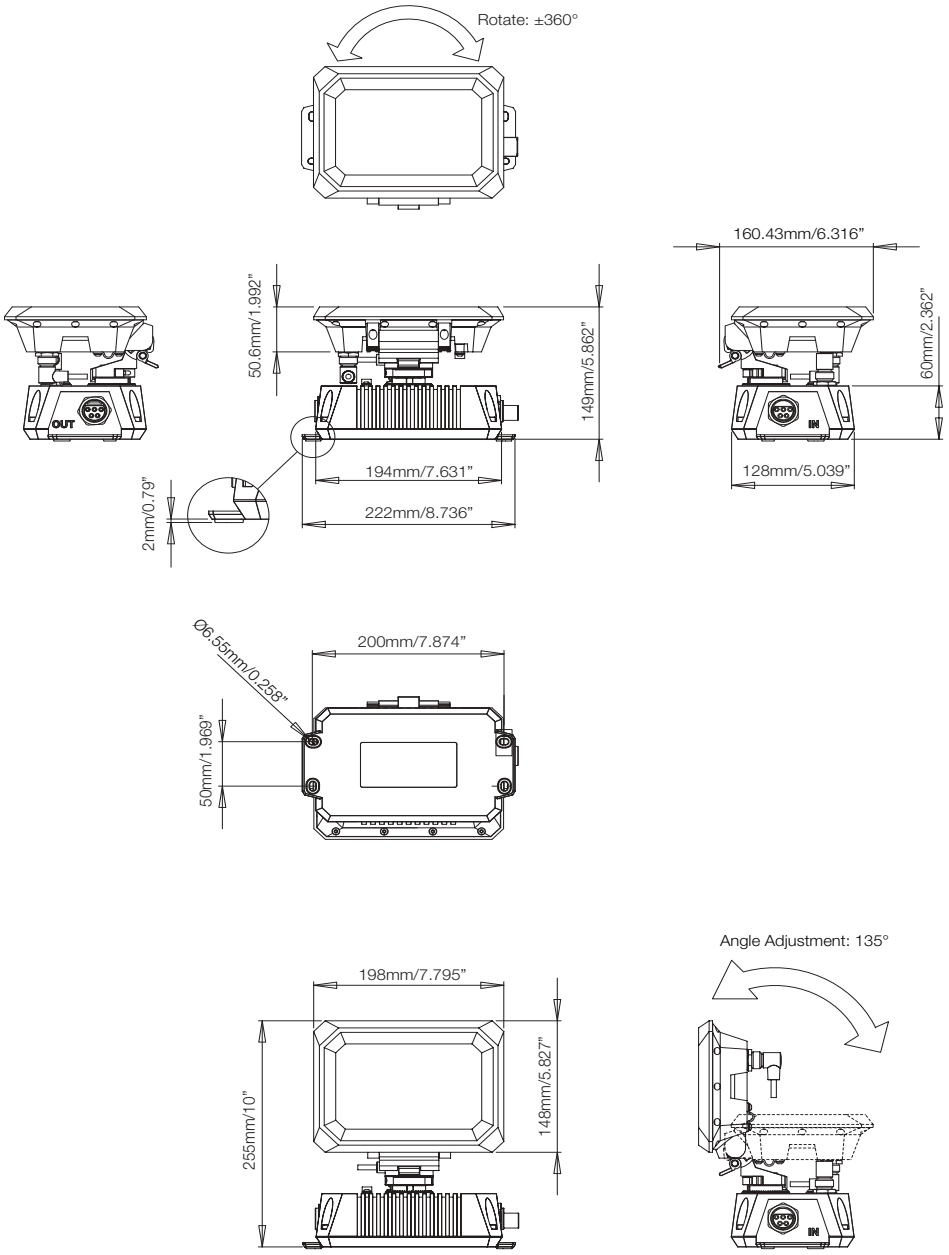

WWW.TRAXONTECHNOLOGIES.COM

© 2010 TRAXON TECHNOLOGIES ALL RIGHTS RESERVED. TRAXON™, TX CONNECT™, LUXILED™ ARE TRADEMARKS OF TRAXON TECHNOLOGIES. U.S. PATENTS, E.U. PATENTS, JAPAN PATENTS, OTHER PATENTS PENDING. SPECIFICATIONS ARE SUBJECT TO CHANGE WITHOUT NOTICE.

Submitting Agency:	Description: XB.W2.5386100 Project: WWTP IMPVT'S WENATCHEE Notes:	Type:
jcwrightlighting phone: 509-535-0098		A3

traxon

Wall Washer Shield AC XB DW

Dimensions

TECHNICAL DRAWING

Wall Washer Shield AC XB-36

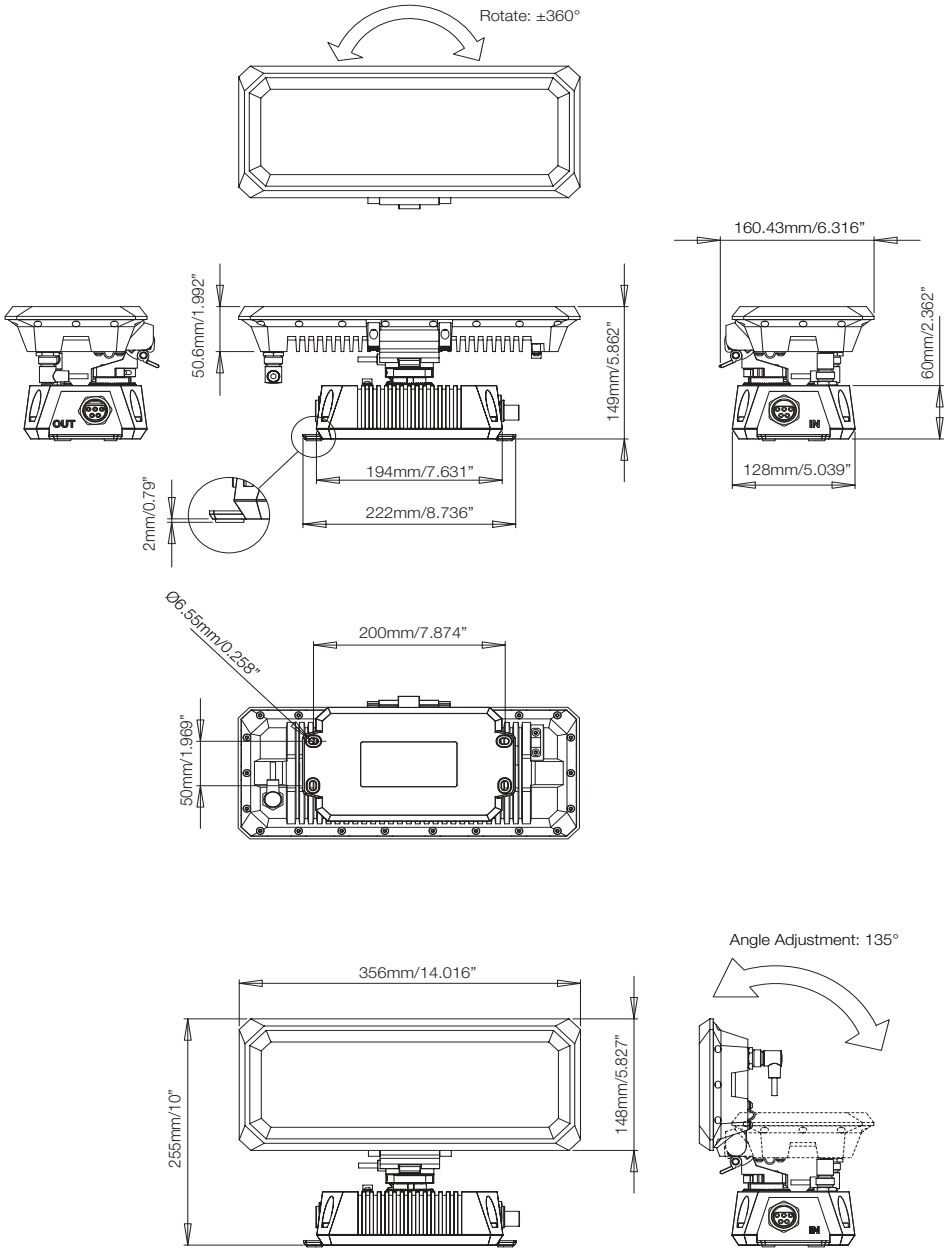

WWW.TRAXONTECHNOLOGIES.COM

© 2010 TRAXON TECHNOLOGIES ALL RIGHTS RESERVED. TRAXON™, TX CONNECT™, LUXILED™ ARE TRADEMARKS OF TRAXON TECHNOLOGIES. U.S. PATENTS, E.U. PATENTS, JAPAN PATENTS, OTHER PATENTS PENDING. SPECIFICATIONS ARE SUBJECT TO CHANGE WITHOUT NOTICE.

Submitting Agency:	Description: XB.W2.5386100 Project: WWTP IMPVT'S WENATCHEE Notes:	Type: A3
jcwrightlighting phone: 509-535-0098		

traxon

Wall Washer Shield AC XB DW

Mounting

MOUNTING

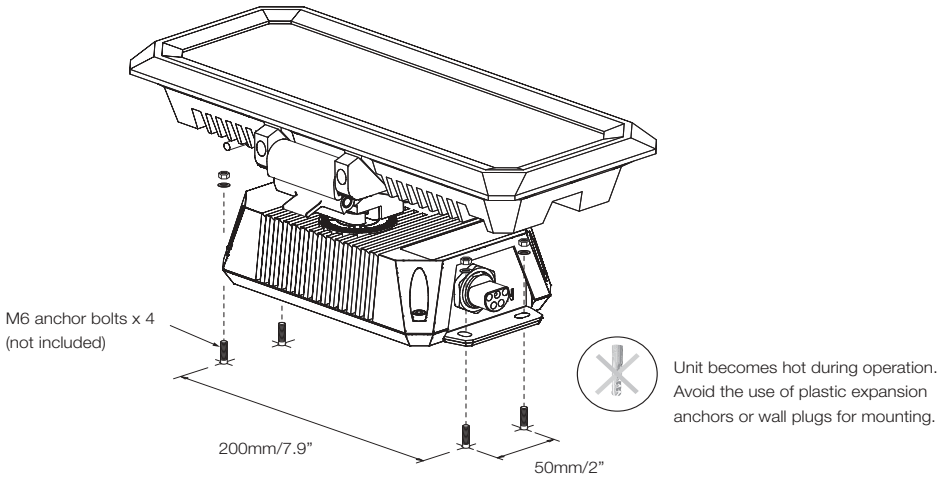

Attention: Glass top cover— Please take care when handling unit to avoid breakage and injury.

WWW.TRAXONTECHNOLOGIES.COM

© 2010 TRAXON TECHNOLOGIES ALL RIGHTS RESERVED. TRAXON™, TX CONNECT™, LUXILED™ ARE TRADEMARKS OF TRAXON TECHNOLOGIES. U.S. PATENTS, E.U. PATENTS, JAPAN PATENTS, OTHER PATENTS PENDING. SPECIFICATIONS ARE SUBJECT TO CHANGE WITHOUT NOTICE.

Submitting Agency:	Description: **XB.W2.5386100**	Type:
jcwrightlighting phone: 509-535-0098	Project: **WWTP IMPVT'S WENATCHEE**	**A3**
	Notes:	

traxon

Wall Washer Shield AC XB DW

System Diagram

SYSTEM DIAGRAM

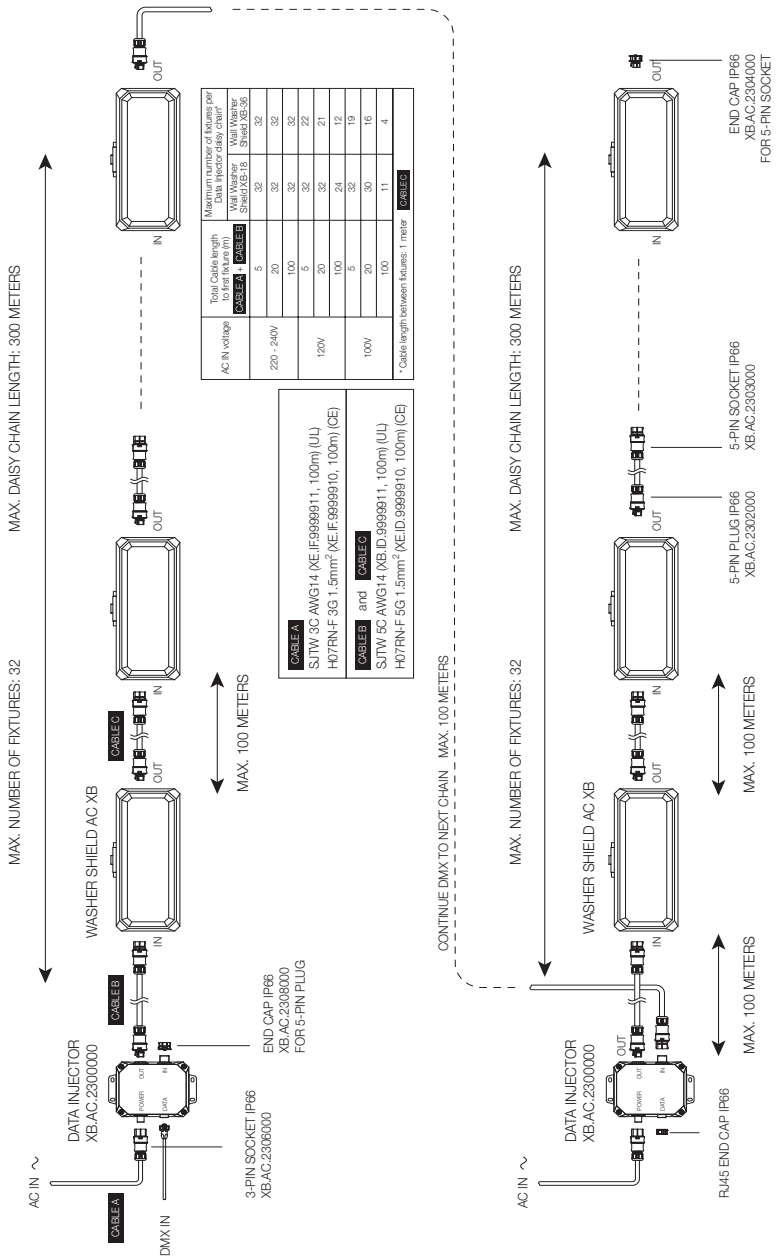

AC IN voltage	Total Cable length between fixtures (m) CABLE C + CABLE B	Maximum number of fixtures per Data Injector daisy chain* Wall Washer Shield XB-18	Wall Washer Shield XB-36
220 - 240V	5	32	32
	20	32	32
	100	32	32
120V	5	32	22
	20	32	21
	100	24	12
100V	5	32	19
	20	30	16
	100	11	4

WWW.TRAXONTECHNOLOGIES.COM

© 2010 TRAXON TECHNOLOGIES ALL RIGHTS RESERVED. TRAXON™, TX CONNECT™, LUXILED™ ARE TRADEMARKS OF TRAXON TECHNOLOGIES. U.S. PATENTS, E.U. PATENTS, JAPAN PATENTS, OTHER PATENTS PENDING. SPECIFICATIONS ARE SUBJECT TO CHANGE WITHOUT NOTICE.

Submitting Agency:	Description: XB.W2.5386100 Project: WWTP IMPVT'S WENATCHEE Notes:	Type:
jcwrightlighting phone: 509-535-0098		A3

traxon

Wall Washer Shield AC XB DW

Accessories

MODEL NUMBER

X B . W x . 5 3 8 x x x x

- Version number
- Cover: 1 = Clear
- Beam angle: 1 = 10°, 2 = 20°, 3 = 30°, 4 = 40x10°, 5 = Open beam, 6 = 40°
- Color: 8 = Dynamic white
- Environment: 3 = IP66
- LED type: 5 = 350mA
- Number of LEDs: 1 = 18 LEDs, 2 = 36 LEDs

STANDARD ACCESSORIES (included in delivery)

Model No.	Description
	TX CONNECT XB CMX Interconnection Cable, 300mm/11.8" (Base to head connection cable)

TX CONTROL

Model No.	Description
CS.MA.5000000	Micro Server
SC.JD.5080000	Light-Drive Jog DW (Black)
SC.JD.5080100	Light-Drive Jog DW (White)

TX CONNECT

Model No.	Description
XB.AC.2302000	5-Pin Field Installable Connector Plug IP66
XB.AC.2303000	5-Pin Field Installable Connector Socket IP66
XB.AC.2304000	5-Pin Connector Socket End Cap IP66
XB.AC.2308000	5-Pin Connector Plug End Cap IP66
DE.AC.0100000	RJ45 Male Connector Housing IP67, Field Installable
XB.AC.0000030	Standalone base for Wall Washer Unit
XE.ID.9999910	AC XB Interconnection Cable, 5-wire, CE (100m/328ft reel)
XE.ID.9999911	AC XB Interconnection Cable, 5-wire, UL (100m/328ft reel)

TX POWER

Model No.	Description
XB.AC.2300000	XB Shield AC Data Injector
XE.IF.9999910	AC XB Power Cable, 3-wire, CE (100m/328ft reel)
XE.IF.9999911	AC XB Power Cable, 3-wire, UL (100m/328ft reel)
XB.AC.2306000	3-pin Field Installable Connector Socket IP66

© 2010 TRAXON TECHNOLOGIES ALL RIGHTS RESERVED. TRAXON™, TX CONNECT™, LUXILED™ ARE TRADEMARKS OF TRAXON TECHNOLOGIES. U.S. PATENTS, E.U. PATENTS, JAPAN PATENTS, OTHER PATENTS PENDING. SPECIFICATIONS ARE SUBJECT TO CHANGE WITHOUT NOTICE.

Submitting Agency:	Description: XB.W2.5311100 Project: WWTP IMPVT'S WENATCHEE Notes:	Type: A4
jcwrightlighting phone: 509-535-0098		

traxon

Wall Washer Shield AC XB RGB

XB.W1.xxxxxxx
XB.W2.xxxxxxx

The Wall Washer Shield AC XB RGB is an IP66-rated, AC line input, lighting fixture equipped with high-brightness LEDs that generates single color or color changing light for a rich wall-washing effect. This fixture is suitable for indoor or outdoor use and equipped with a host of customization options including LED type, LED color, beam angles, and lenses.

LUXEON Lighting Network

CE c ETL us

IP66

PRODUCT SPECIFICATIONS

- **Light Source:** W1: 18 High intensity power LEDs
  W2: 36 High intensity power LEDs
- **Color Range:** 16.7 million additive RGB colors
- **Color Resolution:** 3 x 8-bit continuously variable intensity output range
- **Color Options:** RGB, red, green, blue
- **Beam Angle:** 10°, 20°, 30°, 40°, 40°x10°, open beam
- **Luminous Flux[1]:** W1: 573 lm (30° optics)
  W2: 1114 lm (30° optics)
- **Efficacy[2]:** W1: 20.5 lm/W (30° optics)
  W2: 21 lm/W (30° optics)
- **Cover Lens:** Clear tempered glass
- **Housing:** Aluminium die cast
- **Adjustment Options:** 360° (horizontal), 135° (vertical)
- **Size:** W1: 222mm (W) x 255mm (H) x 128mm (D) / 8.74" (W) x 10" (H) x 5" (D)
  W2: 356mm (W) x 255mm (H) x 128mm (D) / 14" (W) x 10" (H) x 5" (D)
- **Weight:** W1: 3.3kg/7.3lbs
  W2: 4.3kg/9.5lbs
- **Regulatory Listing & Safety Approval:** CE, cETLus
- **Operating Temperature[3]:** −40°C to +60°C / −40°F to +140°F
- **Storage Temperature:** −40°C to +70°C / −40°F to +158°F
- **Environment:** Outdoor (IP66)
- **Humidity:** 85%, non-condensing

ELECTRICAL SPECIFICATIONS

- **Input Voltage:** 100-240V AC 50/60Hz
- **Power Consumption:** W1: 28W max.
  W2: 53W max.
- **LED Current:** 350mA DC

SYSTEM SPECIFICATIONS

- **Power/Data Interface:** AC line; DMX512 on RJ45
- **Control:** DMX512
- **Power Supply:** Built-in

1. Typical luminous flux value. Actual flux will vary according to optics used.
2. Efficacy based on typical luminous value and maximum power consumption.
3. Startup temperature: −20°C/−4°F.

LED CHARACTERISTICS Because LEDs are semiconductor devices, their performances are subject to inherent variability commonly found in semiconductor industry. To improve consistency in performance across the same product, LED manufacturers "sort" LEDs into bins according to different preset parameters, such as forward driving voltage, illumination, etc. Whereas binning is a sorting function, it is not a correction process. Inherent variability in the manufacturing process results always in different binning distributions according to different production lots. Traxon uses automatically binned LEDs on its products, thereby minimizing output variations within the model range.

As with all electronic devices, LED output degrades over time – a term called lumen depreciation. This also explains why it is nearly impossible to expect photometric performances of two LED products with different service life spans to be the same. The rate of LED degrade is a complicate function of many factors such as operating efficiency, duration of continuous operation, and more significantly, environmental conditions (ambient temperature for example). If allowed working under optimal operating temperature range and with good ventilation, LED devices enjoy long service lives over conventional light sources. When using/installing LED devices, care should be taken to ensure that the devices will operate within the operating conditions specified in respective product literature.

WWW.TRAXONTECHNOLOGIES.COM

© 2010 TRAXON TECHNOLOGIES ALL RIGHTS RESERVED. TRAXON™, TX CONNECT™, LUXILED™ ARE TRADEMARKS OF TRAXON TECHNOLOGIES. U.S. PATENTS, E.U. PATENTS, JAPAN PATENTS, OTHER PATENTS PENDING. SPECIFICATIONS ARE SUBJECT TO CHANGE WITHOUT NOTICE.

Submitting Agency:	Description: XB.W2.5311100 Project: WWTP IMPVT'S WENATCHEE Notes:	Type:
jcwrightlighting phone: 509-535-0098		A4

traxon

Wall Washer Shield AC XB RGB

Photometrics

SOURCE SPECIFICATIONS

Source: 36 LEDs RGB (12xR, 12xG, 12xB)

Optics: 30°

Cover Lens: Clear glass cover

Distribution: Asymmetric direct illumination

CCT: N/A

CANDELA DISTRIBUTION

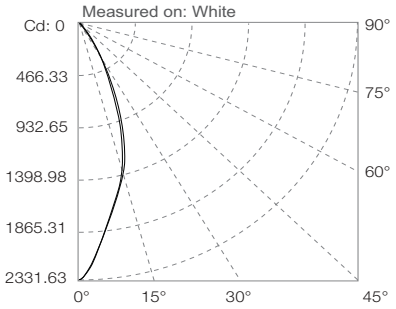

LIGHT OUTPUT

Color	Luminous Flux (lumens)
White	1113.8
Red	316.16
Green	722.73
Blue	111.07

ILLUMINANCE AT A DISTANCE

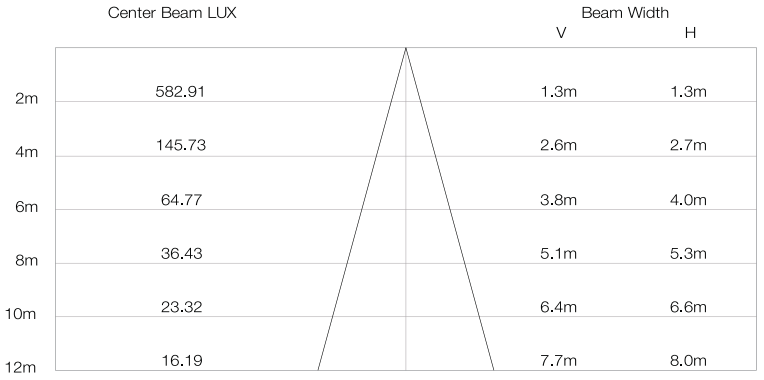

For fc divide by 10.7

Vert.Spread:35.6°
Horiz.Spread:36.7°
For feet multiply by 3.28

WWW.TRAXONTECHNOLOGIES.COM

© 2010 TRAXON TECHNOLOGIES ALL RIGHTS RESERVED. TRAXON™, TX CONNECT™, LUXILED™ ARE TRADEMARKS OF TRAXON TECHNOLOGIES. U.S. PATENTS, E.U. PATENTS, JAPAN PATENTS, OTHER PATENTS PENDING. SPECIFICATIONS ARE SUBJECT TO CHANGE WITHOUT NOTICE.

Submitting Agency:	Description: XB.W2.5311100 Project: WWTP IMPVT'S WENATCHEE Notes:	Type: A4
jcwrightlighting phone: 509-535-0098		

traxon

Wall Washer Shield AC XB RGB

Dimensions

TECHNICAL DRAWING

Wall Washer Shield AC XB-18

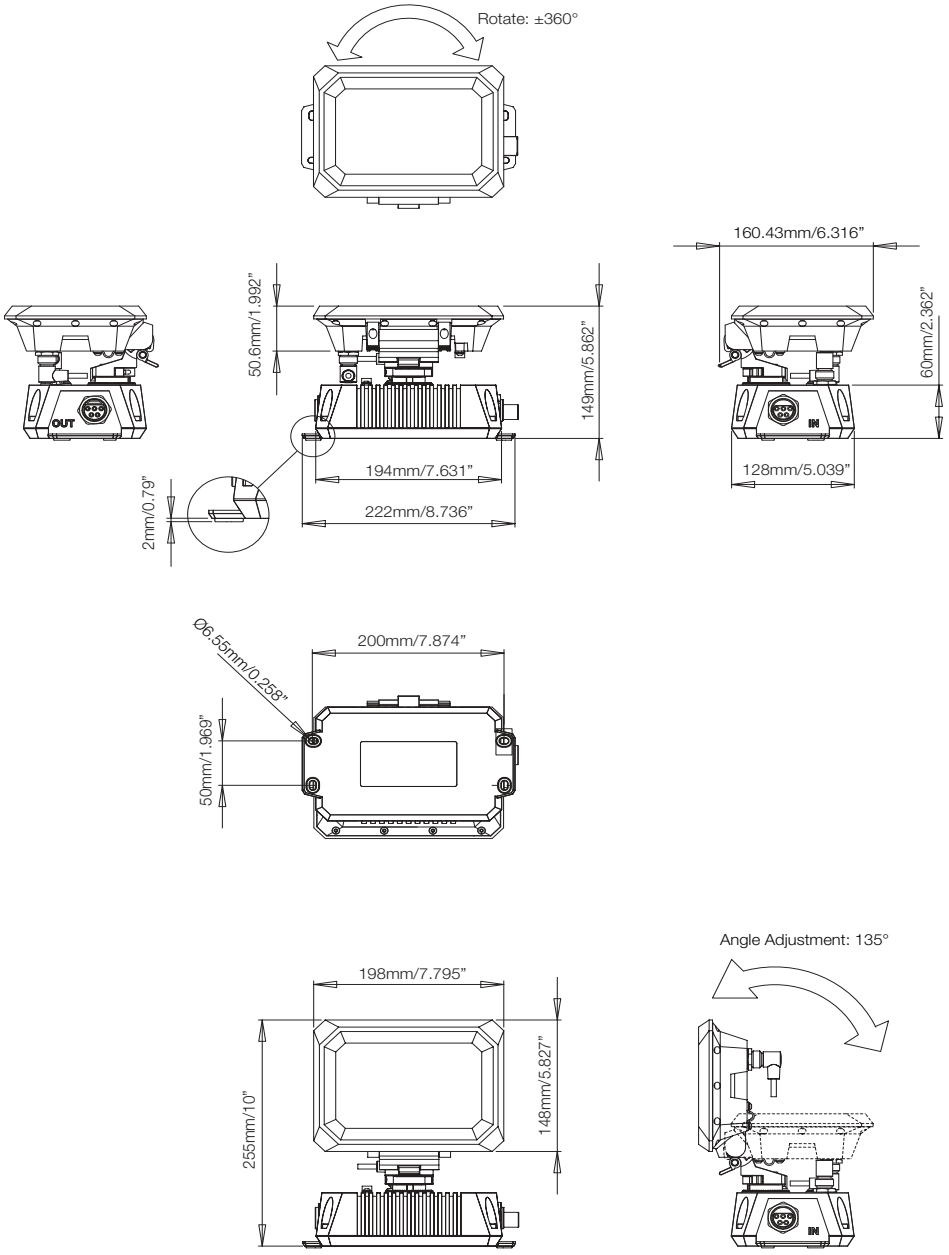

WWW.TRAXONTECHNOLOGIES.COM

© 2010 TRAXON TECHNOLOGIES ALL RIGHTS RESERVED. TRAXON™, TX CONNECT™, LUXILED™ ARE TRADEMARKS OF TRAXON TECHNOLOGIES. U.S. PATENTS, E.U. PATENTS, JAPAN PATENTS, OTHER PATENTS PENDING. SPECIFICATIONS ARE SUBJECT TO CHANGE WITHOUT NOTICE.

Submitting Agency:	Description: XB.W2.5311100 Project: WWTP IMPVT'S WENATCHEE Notes:	Type:
jcwrightlighting phone: 509-535-0098		A4

traxon

Wall Washer Shield AC XB RGB

Dimensions

TECHNICAL DRAWING

Wall Washer Shield AC XB-36

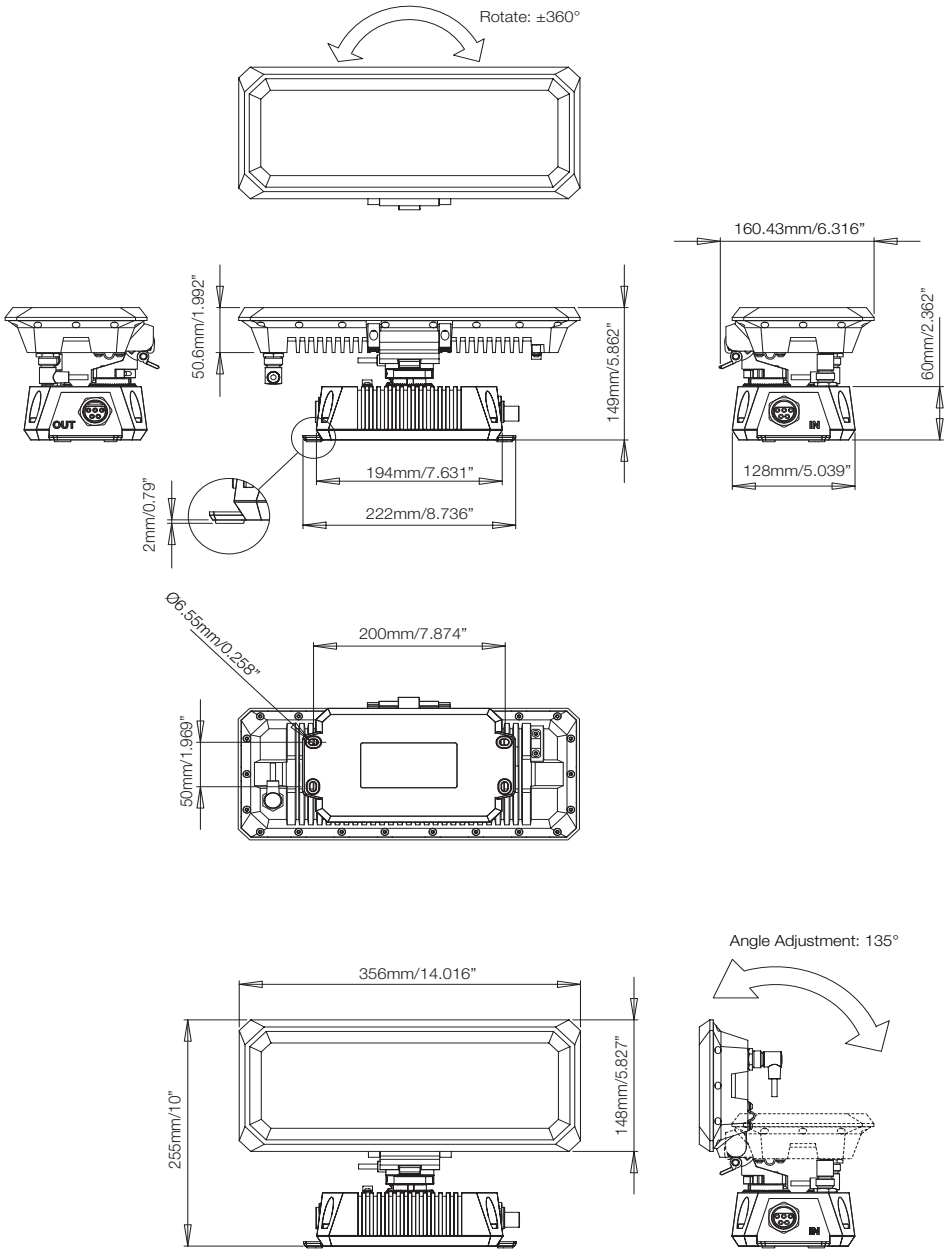

WWW.TRAXONTECHNOLOGIES.COM

© 2010 TRAXON TECHNOLOGIES ALL RIGHTS RESERVED. TRAXON™, TX CONNECT™, LUXILED™ ARE TRADEMARKS OF TRAXON TECHNOLOGIES. U.S. PATENTS, E.U. PATENTS, JAPAN PATENTS, OTHER PATENTS PENDING. SPECIFICATIONS ARE SUBJECT TO CHANGE WITHOUT NOTICE.

Submitting Agency:	Description: XB.W2.5311100 Project: WWTP IMPVT'S WENATCHEE Notes:	Type: A4
jcwrightlighting phone: 509-535-0098		

traxon

Wall Washer Shield AC XB RGB

Mounting

MOUNTING

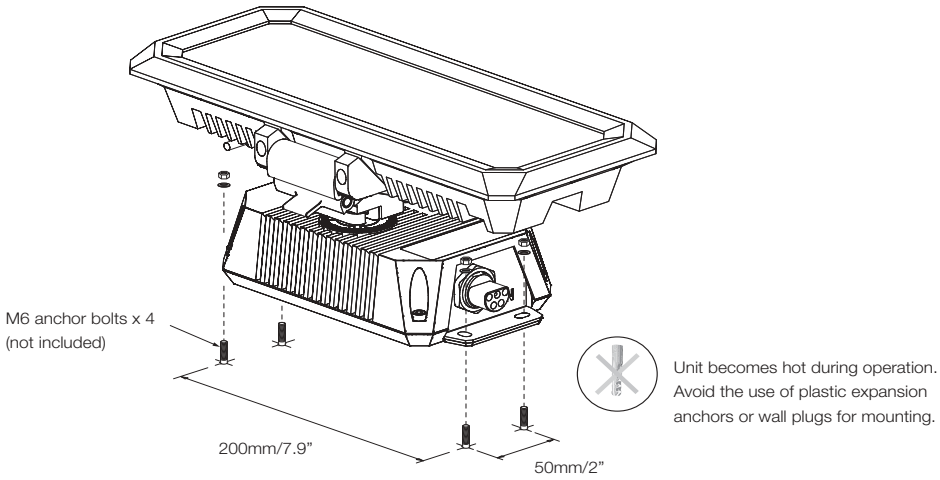

Attention: Glass top cover— Please take care when handling unit to avoid breakage and injury.

WWW.TRAXONTECHNOLOGIES.COM

© 2010 TRAXON TECHNOLOGIES ALL RIGHTS RESERVED. TRAXON™, TX CONNECT™, LUXILED™ ARE TRADEMARKS OF TRAXON TECHNOLOGIES. U.S. PATENTS, E.U. PATENTS, JAPAN PATENTS, OTHER PATENTS PENDING. SPECIFICATIONS ARE SUBJECT TO CHANGE WITHOUT NOTICE.

Submitting Agency:	Description: **XB.W2.5311100**	Type:
jcwrightlighting phone: 509-535-0098	Project: **WWTP IMPVT'S WENATCHEE**	**A4**
	Notes:	

traxon

Wall Washer Shield AC XB RGB

System Diagram

SYSTEM DIAGRAM

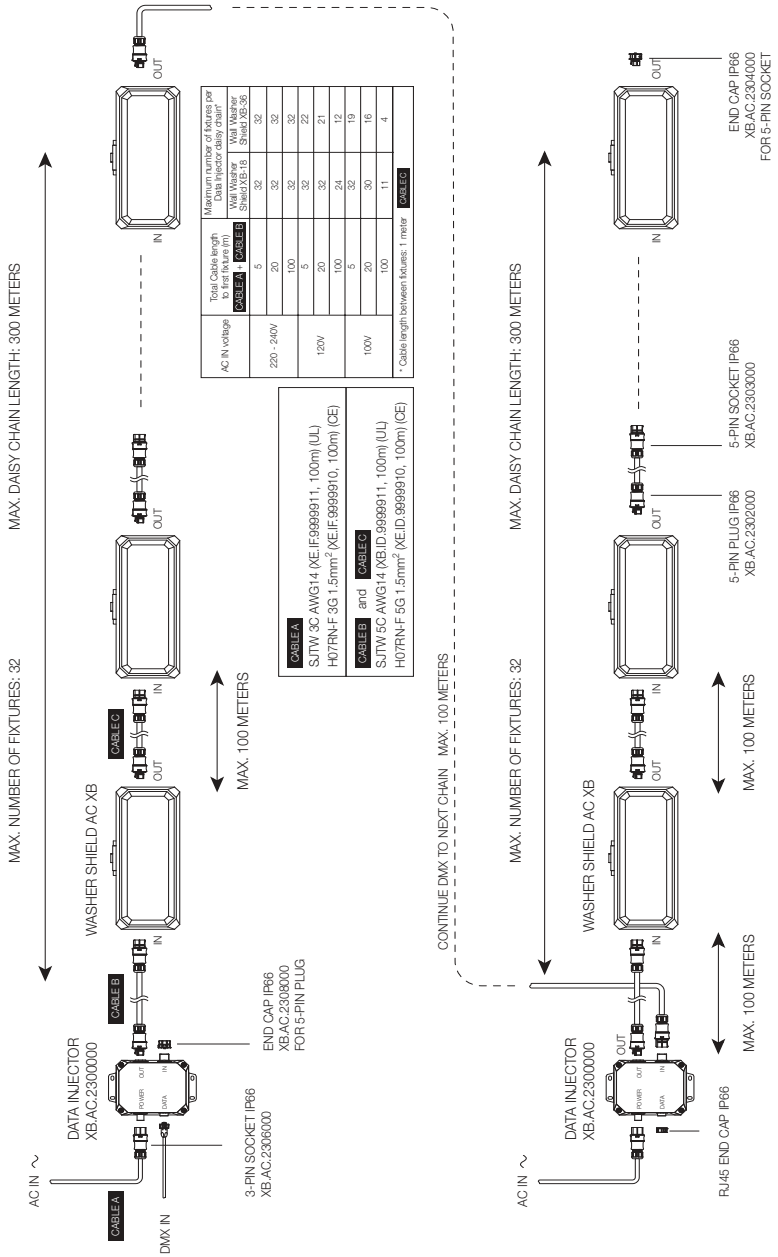

AC IN voltage	Total Cable length to first fixture (m) CABLE A + CABLE B	Maximum number of fixtures per Data Injector daisy chain* Wall Washer Shield XB-18	Wall Washer Shield XB-36
220 - 240V	5	32	32
	20	32	32
	100	32	32
120V	5	32	22
	20	32	21
	100	24	12
100V	5	32	19
	20	30	16
	100	11	4

* Cable length between fixtures: 1 meter CABLE C

© 2010 TRAXON TECHNOLOGIES ALL RIGHTS RESERVED. TRAXON™, TX CONNECT™, LUXILED™ ARE TRADEMARKS OF TRAXON TECHNOLOGIES. U.S. PATENTS, E.U. PATENTS, JAPAN PATENTS, OTHER PATENTS PENDING. SPECIFICATIONS ARE SUBJECT TO CHANGE WITHOUT NOTICE.

Submitting Agency:	Description: XB.W2.5311100 Project: WWTP IMPVT'S WENATCHEE Notes:	Type: A4
jcwrightlighting phone: 509-535-0098		

traxon

Wall Washer Shield AC XB RGB

Accessories

MODEL NUMBER

X B . W x . 5 3 x x x x x

- Version number
- Cover: 1 = Clear
- Beam angle: 1 = 10° 2 = 20° 3 = 30° 4 = 40x10° 5 = Open beam 6 = 40°
- Color: 1 = RGB 2 = Red 3 = Green 4 = Blue
- Environment: 3 = IP66
- LED type: 5 = 350mA
- Number of LEDs: 1 = 18 LEDs 2 = 36 LEDs

STANDARD ACCESSORIES (included in delivery)

Model No.	Description
	TX CONNECT XB CMX Interconnection Cable, 300mm/11.8" (Base to head connection cable)

TX CONTROL

Model No.	Description
CS.MA.5000000	Micro Server
SC.CD.5000000	Light-Drive RGB (Black)
SC.CD.5000100	Light-Drive RGB (White)
SC.JD.5010000	Light-Drive Jog RGB (Black)

TX CONNECT

Model No.	Description
XB.AC.2302000	5-Pin Field Installable Connector Plug IP66
XB.AC.2303000	5-pin Field Installable Connector Socket IP66
XB.AC.2304000	5-Pin Connector Socket End Cap IP66
XB.AC.2308000	5-Pin Connector Plug End Cap IP66
DE.AC.0100000	RJ45 Male Connector Housing IP67, Field Installable
XB.AC.0000030	Standalone base for Wall Washer Unit
XE.ID.9999910	AC XB Interconnection Cable, 5-wire, CE (100m/328ft reel)
XE.ID.9999911	AC XB Interconnection Cable, 5-wire, UL (100m/328ft reel)

TX POWER

Model No.	Description
XB.AC.2300000	XB Shield AC Data Injector
XE.IF.9999910	AC XB Power Cable, 3-wire, CE (100m/328ft reel)
XE.IF.9999911	AC XB Power Cable, 3-wire, UL (100m/328ft reel)
XB.AC.2306000	3-pin Field Installable Connector Socket IP66

© 2010 TRAXON TECHNOLOGIES ALL RIGHTS RESERVED. TRAXON™, TX CONNECT™, LUXILED™ ARE TRADEMARKS OF TRAXON TECHNOLOGIES. U.S. PATENTS, E.U. PATENTS, JAPAN PATENTS, OTHER PATENTS PENDING. SPECIFICATIONS ARE SUBJECT TO CHANGE WITHOUT NOTICE.

Submitting Agency:	Description: XB.W1.5373100 Project: WWTP IMPVT'S WENATCHEE Notes:	Type: A5
jcwrightlighting phone: 509-535-0098		

traxon

Wall Washer Shield AC XB WW

XB.W1.xxxxxxx
XB.W2.xxxxxxx

The Wall Washer Shield AC XB WW is an IP66-rated, AC line input, lighting fixture equipped with high-brightness LEDs that generates a warm white for a rich wall-washing effect. This fixture is suitable for indoor or outdoor use and equipped with a variety of beam angles, and lenses.

LUXEON Lighting Network

CE cETLus

IP66

PRODUCT SPECIFICATIONS

- **Light Source:** W1: 18 High intensity power LEDs
  W2: 36 High intensity power LEDs
- **Color Temperature:** Warm white - 2700 K
- **Beam Angle:** 10°, 20°, 30°, 40°, 40°x10°, open beam
- **Luminous Flux[1]:** W1: 832 lm (30° optics)
  W2: 1664 lm (30° optics)
- **Efficacy[2]:** W1: 29.7 lm/W (30° optics)
  W2: 31.4 lm/W (30° optics)
- **Cover Lens:** Clear tempered glass
- **Housing:** Aluminium die cast
- **Adjustment Options:** 360° (horizontal), 135° (vertical)
- **Size:** W1: 222mm (W) x 255mm (H) x 128mm (D) / 8.74" (W) x 10" (H) x 5" (D)
  W2: 356mm (W) x 255mm (H) x 128mm (D) / 14" (W) x 10" (H) x 5" (D)
- **Weight:** W1: 3.3kg/7.3lbs
  W2: 4.3kg/9.5lbs
- **Regulatory Listing & Safety Approval:** CE, cETLus
- **Operating Temperature[3]:** −40°C to +60°C / −40°F to +140°F
- **Storage Temperature:** −40°C to +70°C / −40°F to +158°F
- **Environment:** Outdoor (IP66)
- **Humidity:** 85%, non-condensing

ELECTRICAL SPECIFICATIONS

- **Input Voltage:** 100-240V AC 50/60Hz
- **Power Consumption:** W1: 28W max.
  W2: 53W max.
- **LED Current:** 350mA DC

SYSTEM SPECIFICATIONS

- **Power/Data Interface:** AC line; DMX512 on RJ45
- **Control:** DMX512
- **Power Supply:** Built-in

1. Typical luminous flux value. Actual flux will vary according to optics used.
2. Efficacy based on typical luminous flux value and maximum power consumption.
3. Startup temperature: −20°C/−4°F.

LED CHARACTERISTICS Because LEDs are semiconductor devices, their performances are subject to inherent variability commonly found in semiconductor industry. To improve consistency in performance across the same product, LED manufacturers "sort" LEDs into bins according to different preset parameters, such as forward driving voltage, illumination, etc. Whereas binning is a sorting function, it is not a correction process. Inherent variability in the manufacturing process results always in different binning distributions according to different production lots. Traxon uses automatically binned LEDs on its products, thereby minimizing output variations within the model range.

As with all electronic devices, LED output degrades over time – a term called lumen depreciation. This also explains why it is nearly impossible to expect photometric performances of two LED products with different service life spans to be the same. The rate of LED degrade is a complicate function of many factors such as operating efficiency, duration of continuous operation, and more significantly, environmental conditions (ambient temperature for example). If allowed working under optimal operating temperature range and with good ventilation, LED devices enjoy long service lives over conventional light sources. When using/installing LED devices, care should be taken to ensure that the devices will operate within the operating conditions specified in respective product literature.

WWW.TRAXONTECHNOLOGIES.COM

© 2010 TRAXON TECHNOLOGIES ALL RIGHTS RESERVED. TRAXON™, TX CONNECT™, LUXILED™ ARE TRADEMARKS OF TRAXON TECHNOLOGIES. U.S. PATENTS, E.U. PATENTS, JAPAN PATENTS, OTHER PATENTS PENDING. SPECIFICATIONS ARE SUBJECT TO CHANGE WITHOUT NOTICE.

Submitting Agency:	Description: XB.W1.5373100 Project: WWTP IMPVT'S WENATCHEE Notes:	Type:
jcwrightlighting phone: 509-535-0098		A5

traxon

Wall Washer Shield AC XB WW

Photometrics

SOURCE SPECIFICATIONS

Source: 36 LEDs, 350mA

Optics: 30°

Cover Lens: Clear glass cover

CCT: 2700 K - Warm white

CANDELA DISTRIBUTION

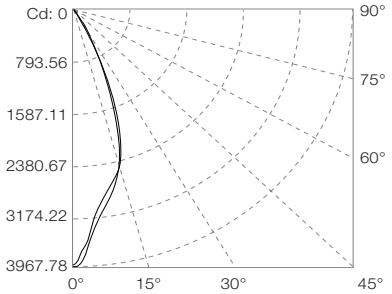

LIGHT OUTPUT

Color	Luminous Flux (lumens)
White	1664.22

ILLUMINANCE AT A DISTANCE

	Center Beam LUX	Beam Width V	Beam Width H
2m	991.90	1.4m	1.4m
4m	247.98	2.7m	2.8m
6m	110.21	4.1m	4.3m
8m	61.99	5.4m	5.7m
10m	39.68	6.8m	7.1m
12m	27.55	8.1m	8.5m

For fc divide by 10.7

Vert.Spread: 37.5°
Horiz.Spread: 39.1°
For feet multiply by 3.28

WWW.TRAXONTECHNOLOGIES.COM

© 2010 TRAXON TECHNOLOGIES ALL RIGHTS RESERVED. TRAXON™, TX CONNECT™, LUXILED™ ARE TRADEMARKS OF TRAXON TECHNOLOGIES. U.S. PATENTS, E.U. PATENTS, JAPAN PATENTS, OTHER PATENTS PENDING. SPECIFICATIONS ARE SUBJECT TO CHANGE WITHOUT NOTICE.

Submitting Agency:	Description: XB.W1.5373100 Project: WWTP IMPVT'S WENATCHEE Notes:	Type:
jcwrightlighting phone: 509-535-0098		A5

traxon

Wall Washer Shield AC XB WW

Dimensions

TECHNICAL DRAWING

Wall Washer Shield AC XB-18

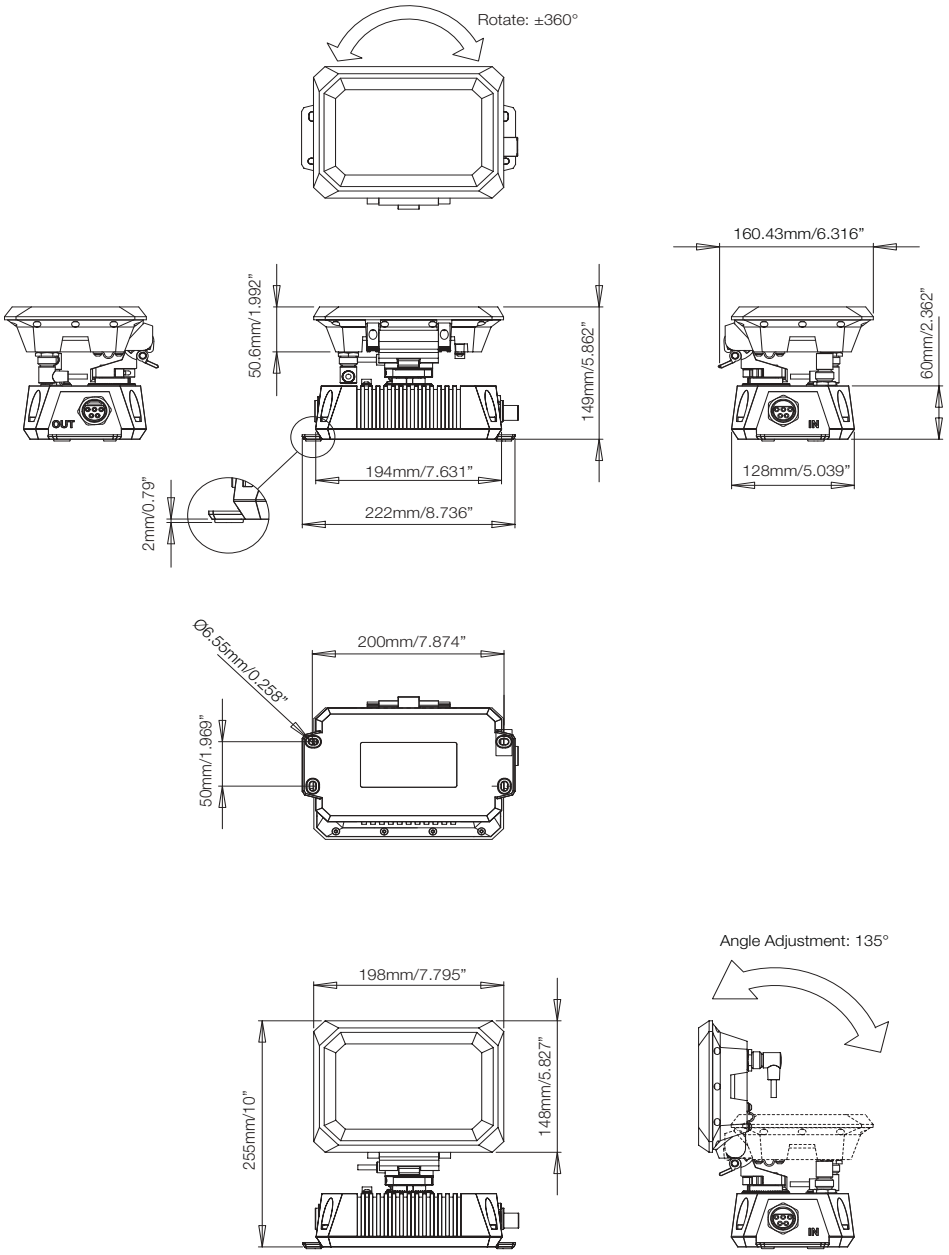

WWW.TRAXONTECHNOLOGIES.COM

© 2010 TRAXON TECHNOLOGIES ALL RIGHTS RESERVED. TRAXON™, TX CONNECT™, LUXILED™ ARE TRADEMARKS OF TRAXON TECHNOLOGIES. U.S. PATENTS, E.U. PATENTS, JAPAN PATENTS, OTHER PATENTS PENDING. SPECIFICATIONS ARE SUBJECT TO CHANGE WITHOUT NOTICE.

Submitting Agency:	Description: XB.W1.5373100 Project: WWTP IMPVT'S WENATCHEE Notes:	Type:
jcwrightlighting phone: 509-535-0098		A5

traxon

Wall Washer Shield AC XB WW

Dimensions

TECHNICAL DRAWING

Wall Washer Shield AC XB-36

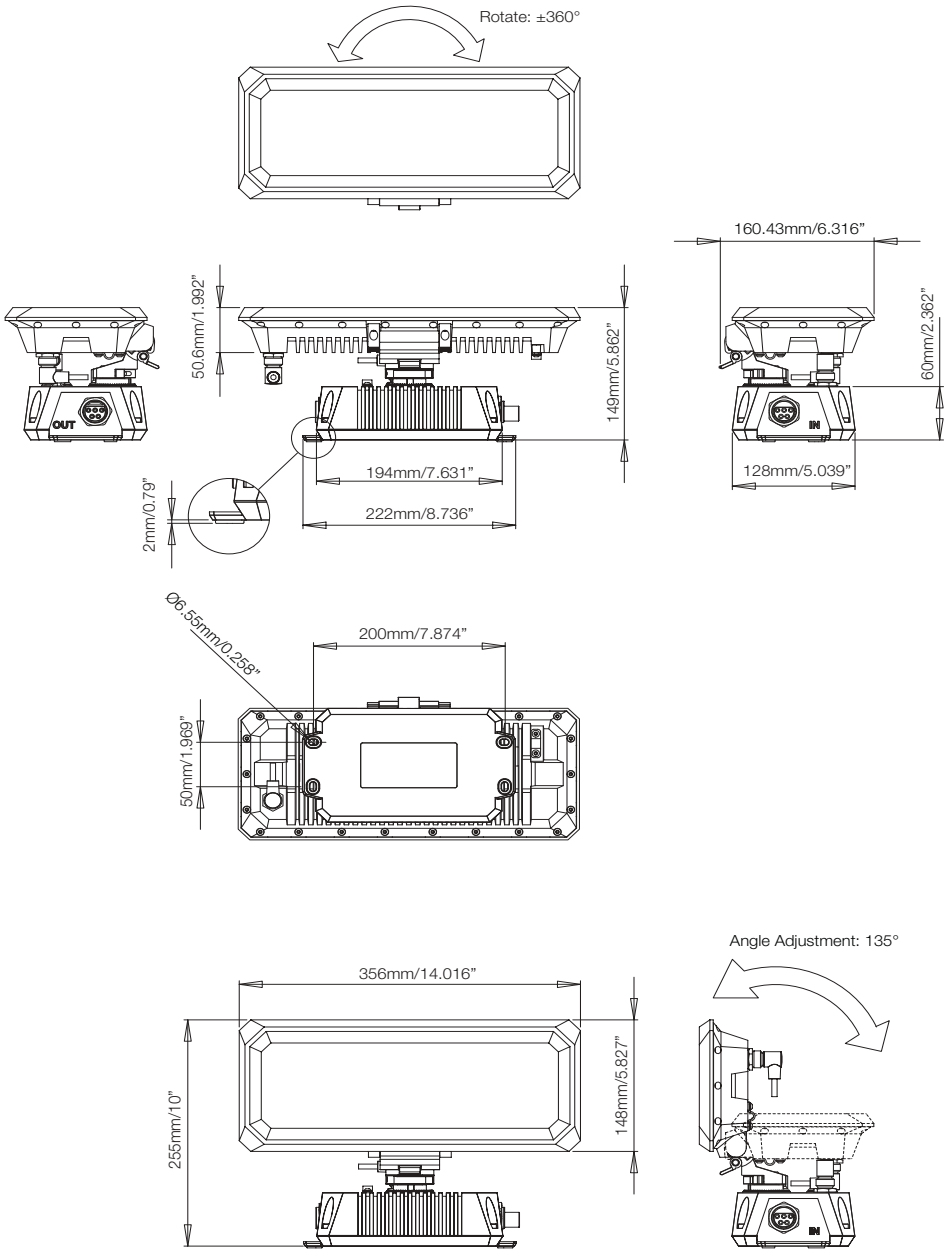

WWW.TRAXONTECHNOLOGIES.COM

© 2010 TRAXON TECHNOLOGIES ALL RIGHTS RESERVED. TRAXON™, TX CONNECT™, LUXILED™ ARE TRADEMARKS OF TRAXON TECHNOLOGIES. U.S. PATENTS, E.U. PATENTS, JAPAN PATENTS, OTHER PATENTS PENDING. SPECIFICATIONS ARE SUBJECT TO CHANGE WITHOUT NOTICE.

Submitting Agency:	Description: XB.W1.5373100 Project: WWTP IMPVT'S WENATCHEE Notes:	Type: A5
jcwrightlighting phone: 509-535-0098		

traxon

Wall Washer Shield AC XB WW

Mounting

MOUNTING

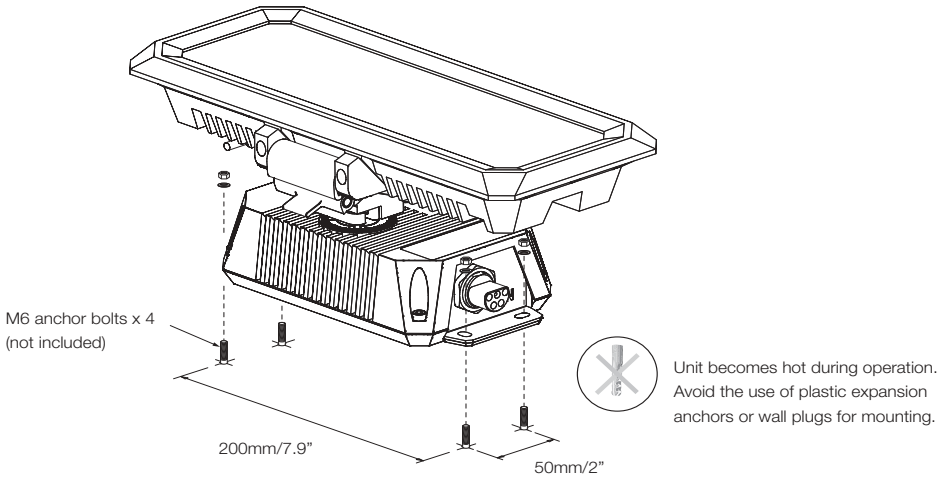

Attention: Glass top cover— Please take care when handling unit to avoid breakage and injury.

WWW.TRAXONTECHNOLOGIES.COM

© 2010 TRAXON TECHNOLOGIES ALL RIGHTS RESERVED. TRAXON™, TX CONNECT™, LUXILED™ ARE TRADEMARKS OF TRAXON TECHNOLOGIES. U.S. PATENTS, E.U. PATENTS, JAPAN PATENTS, OTHER PATENTS PENDING. SPECIFICATIONS ARE SUBJECT TO CHANGE WITHOUT NOTICE.

Submitting Agency:	Description: XB.W1.5373100 Project: WWTP IMPVT'S WENATCHEE Notes:	Type:
jcwrightlighting phone: 509-535-0098		A5

traxon

Wall Washer Shield AC XB WW

System Diagram

SYSTEM DIAGRAM

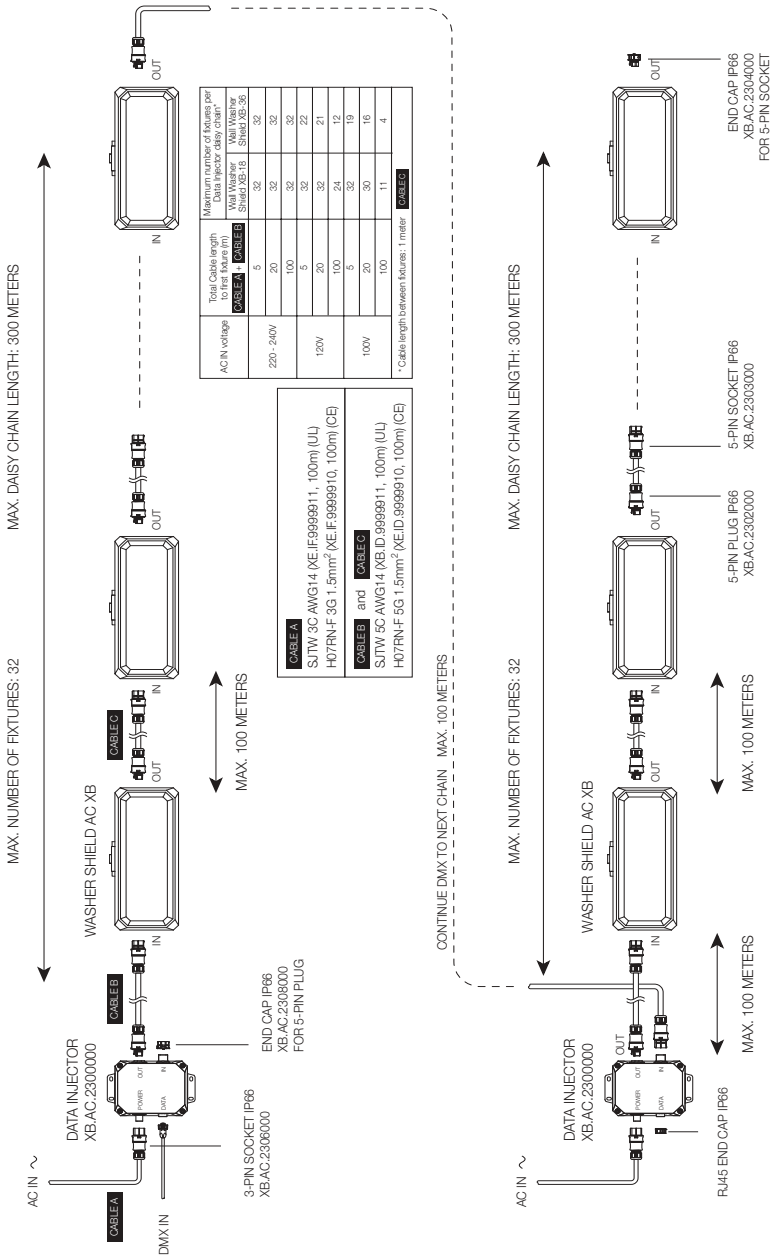

AC IN voltage	Total Cable length between fixtures (m) CABLE A *	CABLE B	Maximum number of fixtures per Data Injector daisy chain* Wall Washer Shield XB-18	Wall Washer Shield XB-36
220 - 240V	5		32	32
	20		32	32
	100		32	32
120V	5		32	22
	20		32	21
	100		24	12
100V	5		32	19
	20		30	16
	100		11	4

* Cable length between fixtures: 1 meter CABLE C

WWW.TRAXONTECHNOLOGIES.COM

© 2010 TRAXON TECHNOLOGIES ALL RIGHTS RESERVED. TRAXON™, TX CONNECT™, LUXILED™ ARE TRADEMARKS OF TRAXON TECHNOLOGIES. U.S. PATENTS, E.U. PATENTS, JAPAN PATENTS, OTHER PATENTS PENDING. SPECIFICATIONS ARE SUBJECT TO CHANGE WITHOUT NOTICE.

Submitting Agency:	Description: XB.W1.5373100 Project: WWTP IMPVT'S WENATCHEE Notes:	Type:
jcwrightlighting phone: 509-535-0098		A5

traxon

Wall Washer Shield AC XB WW

Accessories

MODEL NUMBER

X B . W x . 5 3 7 x x x x

- Version number
- Cover: 1 = Clear
- Beam angle: 1 = 10°, 2 = 20°, 3 = 30°, 4 = 40x10°, 5 = Open beam, 6 = 40°
- Color: 7 = Warm white
- Environment: 3 = IP66
- LED type: 5 = 350mA
- Number of LEDs: 1 = 18 LEDs, 2 = 36 LEDs

STANDARD ACCESSORIES (included in delivery)

Model No.	Description
	TX CONNECT XB CMX Interconnection Cable, 300mm/11.8" (Base to head connection cable)

TX CONTROL

Model No.	Description
CS.MA.5000000	Micro Server
SC.JD.5080000	Light-Drive Jog DW (Black)
SC.JD.5080100	Light-Drive Jog DW (White)

TX CONNECT

Model No.	Description
XB.AC.2302000	5-Pin Field Installable Connector Plug IP66
XB.AC.2303000	5-Pin Field Installable Connector Socket IP66
XB.AC.2304000	5-Pin Connector Socket End Cap IP66
XB.AC.2308000	5-Pin Connector Plug End Cap IP66
DE.AC.0100000	RJ45 Male Connector Housing IP67, Field Installable
XB.AC.0000030	Standalone base for Wall Washer Unit
XE.ID.9999910	AC XB Interconnection Cable, 5-wire, CE (100m/328ft reel)
XE.ID.9999911	AC XB Interconnection Cable, 5-wire, UL (100m/328ft reel)

TX POWER

Model No.	Description
XB.AC.2300000	XB Shield AC Data Injector
XE.IF.9999910	AC XB Power Cable, 3-wire, CE (100m/328ft reel)
XE.IF.9999911	AC XB Power Cable, 3-wire, UL (100m/328ft reel)
XB.AC.2306000	3-pin Field Installable Connector Socket IP66

© 2010 TRAXON TECHNOLOGIES ALL RIGHTS RESERVED. TRAXON™, TX CONNECT™, LUXILED™ ARE TRADEMARKS OF TRAXON TECHNOLOGIES. U.S. PATENTS, E.U. PATENTS, JAPAN PATENTS, OTHER PATENTS PENDING. SPECIFICATIONS ARE SUBJECT TO CHANGE WITHOUT NOTICE.

Submitting Agency:	Description:	Type:
jcwrightlighting phone: 509-535-0098	**LW-TILE-FLOOR-RECT-2.4CW 24IN TILE** Project: **WWTP IMPVT'S WENATCHEE** Notes:	**A6.1**

TILES

LIGHTWILD

RECTANGULAR TILE 4.0 SPECIFICATION SHEET

(NOMINAL SIZE: 2x24 IN or 55x600 mm DIAMETER ACTUAL DIMENSIONS: SEE DIAGRAMS)

TYPE

LIGHTWILD TILE & SUPPORT BOX

TILE

LED COLOR

LW - TILE - FLOOR - RECT - 2x24 - CW

- ☐ WW = WARM WHITE [5]
- ☑ CW = COOL WHITE [5]
- ☐ RGB = COLOR CONTROLLABLE

SUPPORT BOX

LW - TILE - FLOOR - RECT - 2x24 - BOX

FEATURES

- **POWER REQUIREMENT:** 24VDC
- **POWER CONSUMPTION:** 8.7 W PER TILE
- **LISTINGS:** UL (2108, 1838)
- **ENVIRONMENTS:** USE IN DRY, DAMP, OR WET LOCATIONS [2]
- **LENS:** TEMPERED, LOW-IRON FROSTED GLASS
- **LEDS:** SURFACE MOUNT
- **SLIP RESISTANCE CO-EFFICIENT OF FRICTION:** 0.75 DRY, 0.71 WET
- **LOAD RATING:** UP TO 1000 PSI WITH TOTAL LOAD NOT TO EXCEED 3000 LBS (1360 KGS) PER TILE. [3]
- **HOUSING:** STAINLESS STEEL
- **TEMPERATURE RANGE:** -13° TO 158° F (-25° TO 70° C)
- **LUMEN MAINTENANCE (L70):** LED LIFETIMES ARE AFFECTED BY AMBIENT OPERATING TEMPERATURES AND OTHER FACTORS. CONSULT LIGHTWILD FOR DETAILS.
- **IP RATING:** IP65
- **CCT [5]:** WW=3000K. CW=4000K.
- **CABLE CONNECTION:** TILE SHIPS WITH AN 18 GAUGE 2- OR 4-CONDUCTOR CABLE WHIP WITH PLAIN ENDS. A LIGHTWILD SUPPLIED TERMINAL BOX CONNECTS WHIP TO BRANCH CABLE. TERMINAL BOX RESIDES IN SUPPORT BOX UNDER TILE IN FINAL INSTALLATION.
- **SUPPORT BOX:** CORROSION RESISTANT STAINLESS STEEL

DIMENSIONS[4]

(DOWNLOAD CAD-BASED DIMENSIONAL DRAWINGS AND PHOTOMETRIC DATA AT WWW.LIGHTWILD.COM)

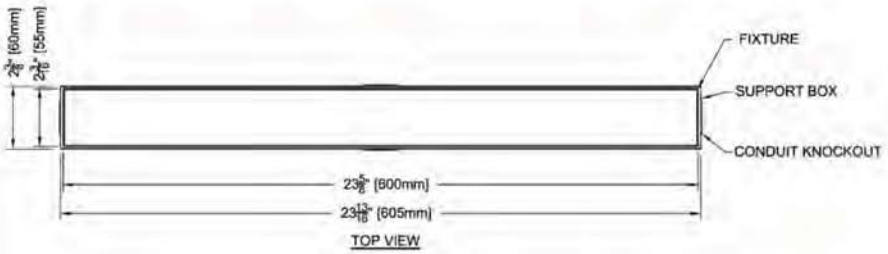

TOP VIEW

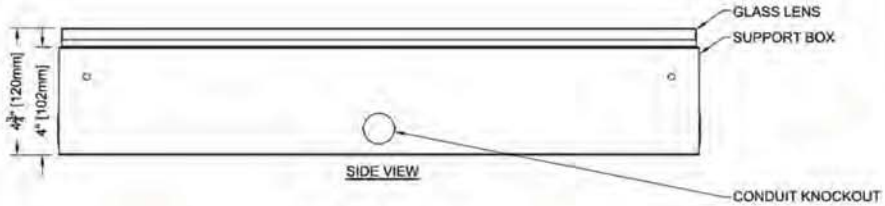

SIDE VIEW

END VIEW

CONTROL

SERIES A CONTROL UNITS
- POWER ON/OFF CONTROL

SERIES B CONTROL UNITS
- POWER + DIMMING BY LIGHTWILD

OR • POWER + DIMMING BY OTHERS (0-10V OR DMX)

OR • DMX SHOW CONTROL BY OTHERS (LIGHTWILD CONTROL UNIT IS DMX READY)

SERIES C CONTROL UNITS
- INCLUDES ONE LIGHTWILD DMX DIRECTOR FOR SHOW CONTROL
- SHOW SELECTION OPTIONS:
  - LIGHTWILD SHOW SELECTOR WALL CONTROLLER

  OR - THIRD PARTY SHOW SELECTOR VIA CONTACT CLOSURE INTERFACE

SERIES D CONTROL UNITS
- BUILT TO ORDER AND REQUIRES CONSULTATION WITH LIGHTWILD
- INDIVIDUALLY CONTROL LIGHTWILD FIXTURES

OR • CONTROL A LARGE NUMBER OF GROUPS OF LIGHTWILD FIXTURES

SEE ALSO CONTROL UNIT DATA SHEETS

ALL CONTENTS COPYRIGHT © 2011 LIGHTWILD ALL RIGHTS RESERVED

PROJECTS@LIGHTWILD.COM • (813) 851-3000 • WWW.LIGHTWILD.COM

1. LIGHTWILD TILES ARE SEALED FIXTURES WITH NO REPLACEMENT BULB OPTIONS. MEANING THE ENTIRE FIXTURE MUST BE REPLACED IF THERE IS A FIXTURE FAILURE. FOLLOWING LIGHTWILD'S INSTALLATION RECOMMENDATIONS PROVIDES A REASONABLE MEANS FOR REMOVING LIGHTWILD TILES IF NECESSARY.
2. WARNING: RISK OF ELECTRIC SHOCK. INSTALL ALL LUMINAIRES 10 FEET (3.05 M) OR MORE FROM A POOL, SPA, OR FOUNTAIN. TILES ARE IP65 RATED. PROPER DRAINAGE REQUIRED. DO NOT ALLOW WATER TO COLLECT OR STAND AROUND INSTALLED TILES. TILES ARE NOT FOR USE IN SUBMERSIBLE APPLICATIONS.
3. FOOT TRAFFIC AND LIGHT UTILITY VEHICLES (MAINTENANCE CARTS, GOLF CARTS, ETC.) ONLY. NOT RATED FOR CARS AND VEHICULAR TRAFFIC.
4. THE MANUFACTURING PROCESS USED FOR LIGHTWILD TILES CAN OCCASIONALLY PRODUCE SLIGHT VARIATIONS IN DIMENSIONS QUOTED ON PRODUCT DATA SHEETS, THE LIGHTWILD WEB SITE, AND OTHER PRODUCT DOCUMENTATION. IN FINAL INSTALLATIONS, TILES SHOULD BE SLIGHTLY RECESSED FROM SURROUNDING SURFACES TO PREVENT POSSIBLE DAMAGE TO THE EDGES OF THE GLASS CAUSED BY LOADS FROM LIGHT UTILITY VEHICLES OR DIRECT IMPACT FROM SNOW PLOWS OR SHOVELS AS WELL AS TO REDUCE TRIPPING HAZARDS. INSTALLATION PROCEDURES SHOULD INCLUDE A MEANS TO LEVEL TILES VERTICALLY OR ADJUST HORIZONTALLY IF NECESSARY TO ACHIEVE DESIRED RESULTS.
5. NOMINAL KELVINS LISTED.

SPECIFICATIONS SUBJECT TO CHANGE WITHOUT NOTICE
SEE LIGHTWILD TERMS AND CONDITIONS AT WWW.LIGHTWILD.COM FOR PRODUCT WARRANTY INFORMATION.

Submitting Agency:	Description:	Type:
jcwrightlighting phone: 509-535-0098	**LW-TILE-FLOOR-RECT-2.4CW 36IN TILE** Project: **WWTP IMPVT'S WENATCHEE** Notes:	**A6.2**

LIGHTWILD

RECTANGULAR TILE 4.0 SPECIFICATION SHEET

(NOMINAL SIZE: 2x36 IN or 55x900 mm DIAMETER ACTUAL DIMENSIONS: SEE DIAGRAMS)

TYPE

TILES

PRODUCT PHOTO

LIGHTWILD TILE
& SUPPORT BOX

TILE

LW - TILE - FLOOR - RECT - 2x36 - CW

- ☐ WW = WARM WHITE [5]
- ☒ CW = COOL WHITE [5]
- ☐ RGB = COLOR CONTROLLABLE

SUPPORT BOX

LW - TILE - FLOOR - RECT - 2x36 - BOX

FEATURES

- **POWER REQUIREMENT:** 24VDC
- **POWER CONSUMPTION:** 11.6 W PER TILE
- **LISTINGS:** UL (2108, 1838)
- **ENVIRONMENTS:** USE IN DRY, DAMP, OR WET LOCATIONS [2]
- **LENS:** TEMPERED, LOW-IRON FROSTED GLASS
- **LEDS:** SURFACE MOUNT
- **SLIP RESISTANCE CO-EFFICIENT OF FRICTION:** 0.75 DRY, 0.71 WET
- **LOAD RATING:** UP TO 1000 PSI WITH TOTAL LOAD NOT TO EXCEED 3000 LBS (1360 KGS) PER TILE. [3]
- **HOUSING:** STAINLESS STEEL
- **TEMPERATURE RANGE:** -13° TO 158° F (-25° TO 70° C)
- **LUMEN MAINTENANCE (L70):** LED LIFETIMES ARE AFFECTED BY AMBIENT OPERATING TEMPERATURES AND OTHER FACTORS. CONSULT LIGHTWILD FOR DETAILS
- **IP RATING:** IP65
- **CCT [5]:** WW=3000K, CW=4000K
- **CABLE CONNECTION:** TILE SHIPS WITH AN 18 GAUGE 2- OR 4-CONDUCTOR CABLE WHIP WITH PLAIN ENDS. A LIGHTWILD SUPPLIED TERMINAL BOX CONNECTS WHIP TO BRANCH CABLE. TERMINAL BOX RESIDES IN SUPPORT BOX UNDER TILE IN FINAL INSTALLATION.
- **SUPPORT BOX:** CORROSION RESISTANT STAINLESS STEEL

DIMENSIONS[4]

(DOWNLOAD CAD-BASED DIMENSIONAL DRAWINGS AND PHOTOMETRIC DATA AT WWW.LIGHTWILD.COM)

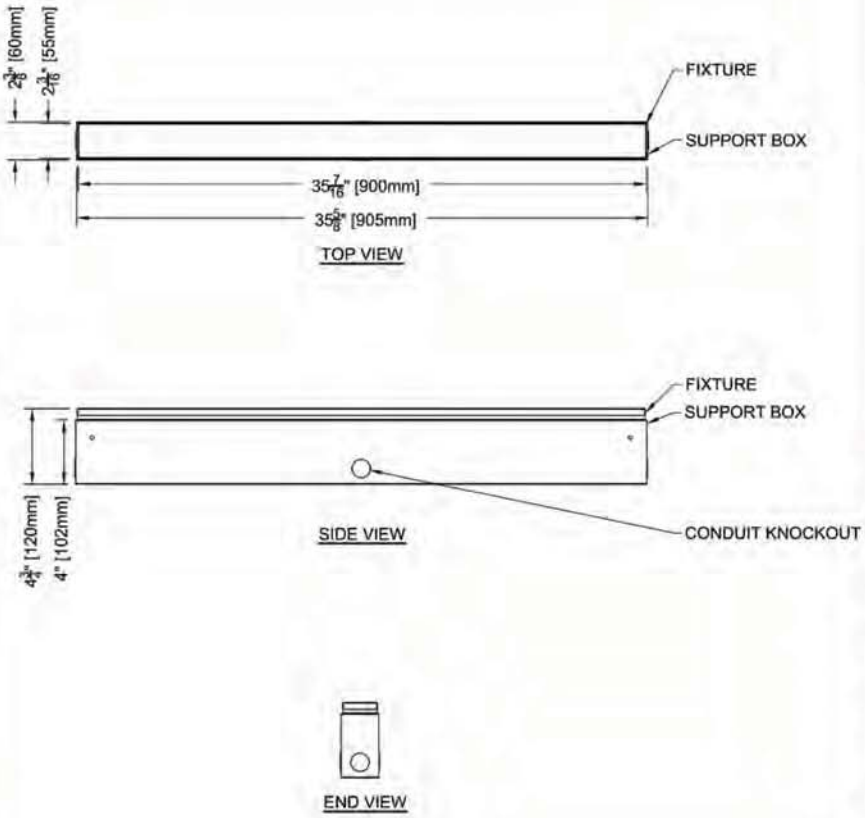

CONTROL

SERIES A CONTROL UNITS
- POWER ON/OFF CONTROL

SERIES B CONTROL UNITS
- POWER + DIMMING BY LIGHTWILD

OR • POWER + DIMMING BY OTHERS (0-10V OR DMX)

OR • DMX SHOW CONTROL BY OTHERS (LIGHTWILD CONTROL UNIT IS DMX READY)

SERIES C CONTROL UNITS
- INCLUDES ONE LIGHTWILD DMX DIRECTOR FOR SHOW CONTROL
- SHOW SELECTION OPTIONS:
  - LIGHTWILD SHOW SELECTOR WALL CONTROLLER

  OR - THIRD PARTY SHOW SELECTOR VIA CONTACT CLOSURE INTERFACE

SERIES D CONTROL UNITS
- BUILT TO ORDER AND REQUIRES CONSULTATION WITH LIGHTWILD
- INDIVIDUALLY CONTROL LIGHTWILD FIXTURES

OR • CONTROL A LARGE NUMBER OF GROUPS OF LIGHTWILD FIXTURES

SEE ALSO CONTROL UNIT DATA SHEETS

ALL CONTENTS COPYRIGHT © 2011 LIGHTWILD. ALL RIGHTS RESERVED.

PROJECTS@LIGHTWILD.COM • (913) 851-3000 • WWW.LIGHTWILD.COM

1. LIGHTWILD TILES ARE SEALED FIXTURES WITH NO REPLACEMENT BULB OPTIONS. MEANING THE ENTIRE FIXTURE MUST BE REPLACED IF THERE IS A FIXTURE FAILURE. FOLLOWING LIGHTWILD'S INSTALLATION RECOMMENDATIONS PROVIDES A REASONABLE MEANS FOR REMOVING LIGHTWILD TILES IF NECESSARY.
2. WARNING: RISK OF ELECTRIC SHOCK. INSTALL ALL LUMINAIRES 10 FEET (3.05 M) OR MORE FROM A POOL, SPA, OR FOUNTAIN. TILES ARE IP65 RATED. PROPER DRAINAGE REQUIRED. DO NOT ALLOW WATER TO COLLECT OR STAND AROUND INSTALLED TILES. TILES ARE NOT FOR USE IN SUBMERSIBLE APPLICATIONS.
3. FOOT TRAFFIC AND LIGHT UTILITLY VEHICLES (MAINTENANCE CARTS, GOLF CARTS, ETC.) ONLY. NOT RATED FOR CARS AND VEHICULAR TRAFFIC.
4. THE MANUFACTURING PROCESS USED FOR LIGHTWILD TILES CAN OCCASIONALLY PRODUCE SLIGHT VARIATIONS IN DIMENSIONS QUOTED ON PRODUCT DATA SHEETS, THE LIGHTWILD WEB SITE, AND OTHER PRODUCT DOCUMENTATION. IN FINAL INSTALLATIONS, TILES SHOULD BE SLIGHTLY RECESSED FROM SURROUNDING SURFACES TO PREVENT POSSIBLE DAMAGE TO THE EDGES OF THE GLASS CAUSED BY LOADS FROM LIGHT UTILITY VEHICLES OR DIRECT IMPACT FROM SNOW PLOWS OR SHOVELS AS WELL AS TO REDUCE TRIPPING HAZARDS. INSTALLATION PROCEDURES SHOULD INCLUDE A MEANS TO LEVEL TILES VERTICALLY OR ADJUST HORIZONTALLY IF NECESSARY TO ACHIEVE DESIRED RESULTS.
5. NOMINAL KELVINS LISTED.

SPECIFICATIONS SUBJECT TO CHANGE WITHOUT NOTICE.
SEE LIGHTWILD TERMS AND CONDITIONS AT WWW.LIGHTWILD.COM FOR PRODUCT WARRANTY INFORMATION.

Submitting Agency:	Description: **XB.L3.5381100** Project: **WWTP IMPVT'S WENATCHEE** Notes:	Type: **A7**
jcwrightlighting phone: 509-535-0098		

traxon

Liner Shield AC XB DW

XB.L1.xxxxxxx
XB.L2.xxxxxxx
XB.L3.xxxxxxx

The Liner Shield AC XB DW is an IP66-rated, AC line input, linear lighting fixture equipped with 18, 27, or 36 high-brightness LEDs, dedicated to project an intense even light spread to brightly wash any flat surface with ease. The fixture is controlled by DMX and can be daisy-chained to form long runs.

LUXEON Lighting Network

CE cETLus

IP66

PRODUCT SPECIFICATIONS

- **Light Source:** L1: 18 High intensity power LEDs
  L2: 27 High intensity power LEDs
  L3: 36 High intensity power LEDs
- **Color Temperature:** Dynamic white - 2700 K - 6500 K
- **Beam Angle:** 10°, 20°, 30°, 40°, 40°x10°, open beam
- **Luminous Flux:** 1398 lm (40°x10° optics)[1]
- **Efficacy:** 35.0 lm/W (40°x10° optics)[2]
- **Cover Lens:** Clear PC
- **LED Pitch:** 36.8mm
- **Housing:** Aluminium extrusion with die cast base
- **Adjustment Options:** 120° tilt
- **Size:** L1: 700mm (L) x 95mm (W) x 130mm (H) / 27.6" (L) x 3.7" (W) x 5.1" (H)
  L2: 1048mm (L) x 95mm (W) x 130mm (H) / 41.3" (L) x 3.7" (W) x 5.1" (H)
  L3: 1396mm (L) x 95mm (W) x 130mm (H) / 55.0" (L) x 3.7" (W) x 5.1" (H)
- **Weight:** L1: 5.5kg/12.1lbs
  L2: 7kg/15.4lbs
  L3: 8.3kg/18.3lbs
- **Regulatory Listing & Safety Approval:** CE, cETLus
- **Operating Temperature[3]:** −40°C to +60°C / −40°F to +140°F
- **Storage Temperature:** −40°C to +70°C / −40°F to +158°F
- **Environment:** Outdoor (IP66)
- **Humidity:** 85%, non-condensing

ELECTRICAL SPECIFICATIONS

- **Input Voltage:** 100-240V AC 50/60Hz
- **Power Consumption:** L1: 28W, L2: 40W, L3: 53W max.
- **LED Current:** 350mA DC

SYSTEM SPECIFICATIONS

- **Power/Data Interface:** AC line; DMX512 on RJ45
- **Control:** DMX512
- **Power Supply:** Built-in

1. Typical luminous flux value for XB-27. Actual flux will vary according to optics used.
2. Efficacy based on typical luminous flux of XB-27 and maximum power consumption.
3. Startup temperature: −20°C / −4°F.

LED CHARACTERISTICS Because LEDs are semiconductor devices, their performances are subject to inherent variability commonly found in semiconductor industry. To improve consistency in performance across the same product, LED manufacturers "sort" LEDs into bins according to different preset parameters, such as forward driving voltage, illumination, etc. Whereas binning is a sorting function, it is not a correction process. Inherent variability in the manufacturing process results always in different binning distributions according to different production lots. Traxon uses automatically binned LEDs on its products, thereby minimizing output variations within the model range.

As with all electronic devices, LED output degrades over time – a term called lumen depreciation. This also explains why it is nearly impossible to expect photometric performances of two LED products with different service life spans to be the same. The rate of LED degrade is a complicate function of many factors such as operating efficiency, duration of continuous operation, and more significantly, environmental conditions (ambient temperature for example). If allowed working under optimal operating temperature range and with good ventilation, LED devices enjoy long service lives over conventional light sources. When using/installing LED devices, care should be taken to ensure that the devices will operate within the operating conditions specified in respective product literature.

WWW.TRAXONTECHNOLOGIES.COM

© 2011 TRAXON TECHNOLOGIES ALL RIGHTS RESERVED. TRAXON™, TX CONNECT™, LUXILED™ ARE TRADEMARKS OF TRAXON TECHNOLOGIES. U.S. PATENTS, E.U. PATENTS, JAPAN PATENTS, OTHER PATENTS PENDING. SPECIFICATIONS ARE SUBJECT TO CHANGE WITHOUT NOTICE.

Submitting Agency:	Description: XB.L3.5381100 Project: WWTP IMPVT'S WENATCHEE Notes:	Type:
jcwrightlighting phone: 509-535-0098		A7

traxon

Liner Shield AC XB DW

Photometrics

SOURCE SPECIFICATIONS

Source: High intensity power light emitting diodes 27 LEDs

Optics: 40°x10°

Cover lens: Clear PC

CCT: 2700 K - 6500 K - Dynamic white

CANDELA DISTRIBUTION

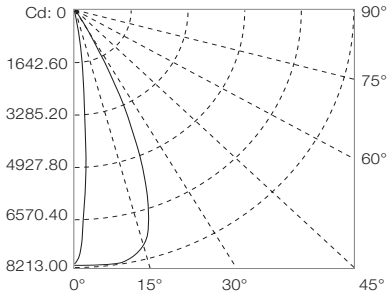

LIGHT OUTPUT

Color	Luminous Flux (lumens)
White	1397.84

ILLUMINANCE AT A DISTANCE

	Center Beam LUX	Beam Width V	Beam Width H
2m	2043.56	1.8m	0.3m
4m	510.89	3.6m	0.6m
6m	227.06	5.4m	0.9m
8m	127.72	7.2m	1.2m
10m	81.74	9.0m	1.5m
12m	56.77	10.8m	1.8m

For fc divide by 10.7

Vert.Spread: 48.4°
Horiz.Spread: 8.4°
For feet multiply by 3.28

WWW.TRAXONTECHNOLOGIES.COM

© 2011 TRAXON TECHNOLOGIES ALL RIGHTS RESERVED. TRAXON™, TX CONNECT™, LUXILED™ ARE TRADEMARKS OF TRAXON TECHNOLOGIES. U.S. PATENTS, E.U. PATENTS, JAPAN PATENTS, OTHER PATENTS PENDING. SPECIFICATIONS ARE SUBJECT TO CHANGE WITHOUT NOTICE.

Submitting Agency:	Description: XB.L3.5381100 Project: WWTP IMPVT'S WENATCHEE Notes:	Type:
jcwrightlighting phone: 509-535-0098		A7

traxon

Liner Shield AC XB DW

Dimensions

TECHNICAL DRAWING

Liner Shield AC XB-18

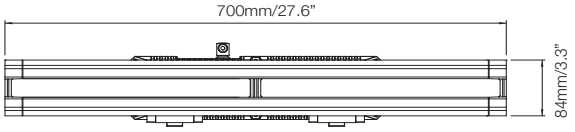

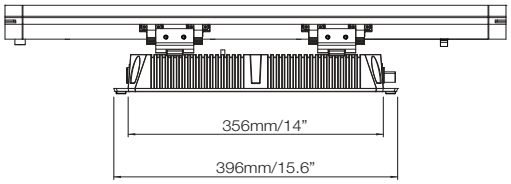

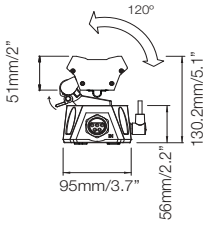

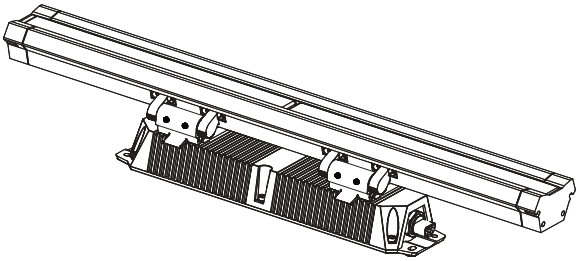

WWW.TRAXONTECHNOLOGIES.COM

© 2011 TRAXON TECHNOLOGIES ALL RIGHTS RESERVED. TRAXON™, TX CONNECT™, LUXILED™ ARE TRADEMARKS OF TRAXON TECHNOLOGIES. U.S. PATENTS, E.U. PATENTS, JAPAN PATENTS, OTHER PATENTS PENDING. SPECIFICATIONS ARE SUBJECT TO CHANGE WITHOUT NOTICE.

Submitting Agency:	Description: XB.L3.5381100 Project: WWTP IMPVT'S WENATCHEE Notes:	Type:
jcwrightlighting phone: 509-535-0098		A7

traxon

Liner Shield AC XB DW

Dimensions

TECHNICAL DRAWING

Liner Shield AC XB-27

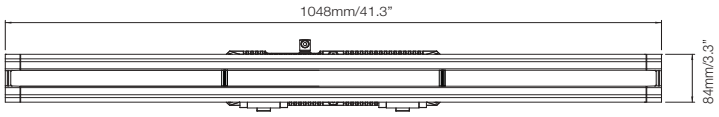

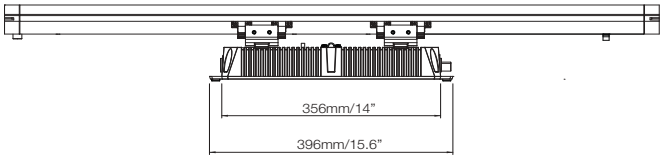

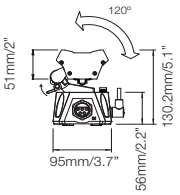

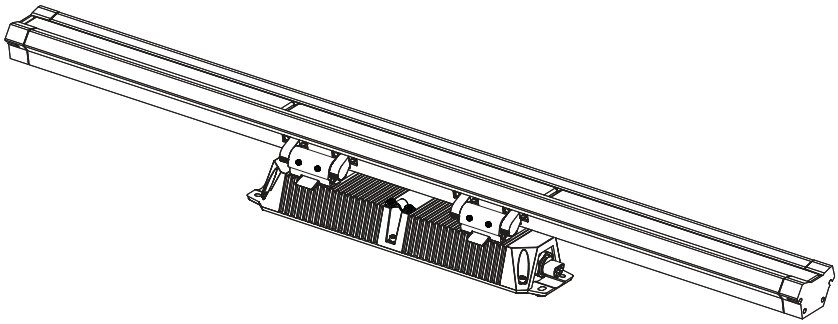

WWW.TRAXONTECHNOLOGIES.COM

© 2011 TRAXON TECHNOLOGIES ALL RIGHTS RESERVED. TRAXON™, TX CONNECT™, LUXILED™ ARE TRADEMARKS OF TRAXON TECHNOLOGIES. U.S. PATENTS, E.U. PATENTS, JAPAN PATENTS, OTHER PATENTS PENDING. SPECIFICATIONS ARE SUBJECT TO CHANGE WITHOUT NOTICE.

Submitting Agency:	Description: XB.L3.5381100 Project: WWTP IMPVT'S WENATCHEE Notes:	Type:
jcwrightlighting phone: 509-535-0098		A7

traxon

Liner Shield AC XB DW

Dimensions

TECHNICAL DRAWING

Liner Shield AC XB-36

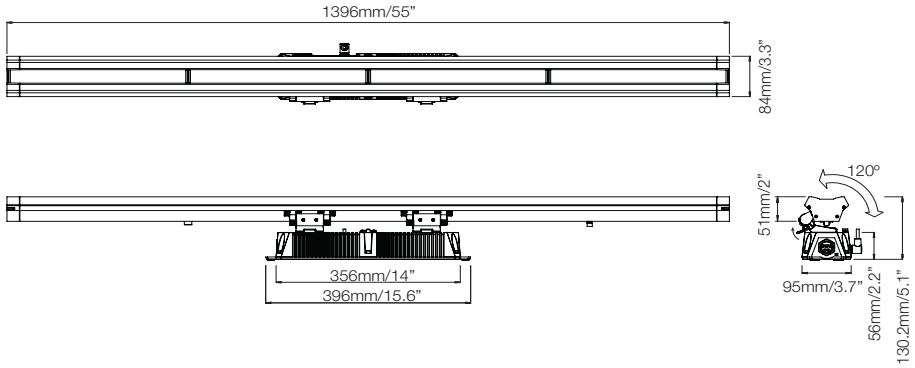

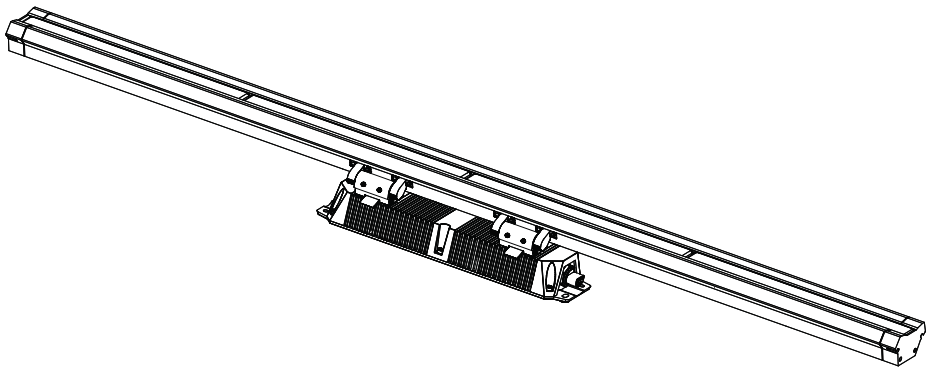

WWW.TRAXONTECHNOLOGIES.COM

© 2011 TRAXON TECHNOLOGIES ALL RIGHTS RESERVED. TRAXON™, TX CONNECT™, LUXILED™ ARE TRADEMARKS OF TRAXON TECHNOLOGIES. U.S. PATENTS, E.U. PATENTS, JAPAN PATENTS, OTHER PATENTS PENDING. SPECIFICATIONS ARE SUBJECT TO CHANGE WITHOUT NOTICE.

Submitting Agency:	Description: XB.L3.5381100 Project: WWTP IMPVT'S WENATCHEE Notes:	Type:
jcwrightlighting phone: 509-535-0098		A7

traxon

Liner Shield AC XB DW

Mounting

MOUNTING

Unit becomes hot during operation.
Avoid the use of plastic expansion anchors or wall plugs for mounting.
Only to be installed outside arms reach.

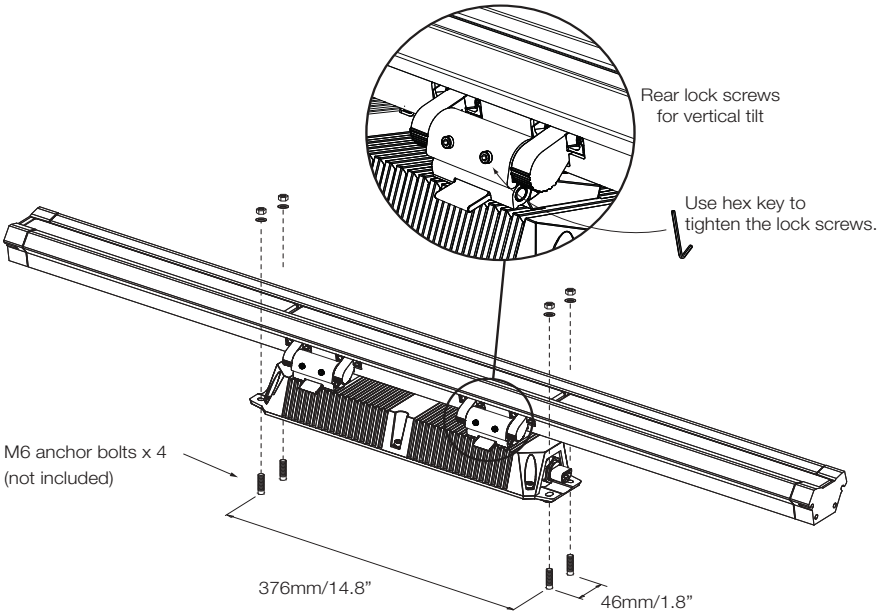

© 2011 TRAXON TECHNOLOGIES ALL RIGHTS RESERVED. TRAXON ™, TX CONNECT ™, LUXILED ™ ARE TRADEMARKS OF TRAXON TECHNOLOGIES. U.S. PATENTS, E.U. PATENTS, JAPAN PATENTS, OTHER PATENTS PENDING. SPECIFICATIONS ARE SUBJECT TO CHANGE WITHOUT NOTICE.

Submitting Agency:	Description: XB.L3.5381100	Type:
jcwrightlighting phone: 509-535-0098	Project: WWTP IMPVT'S WENATCHEE	A7
	Notes:	

traxon

Liner Shield AC XB DW

System Diagram

SYSTEM DIAGRAM

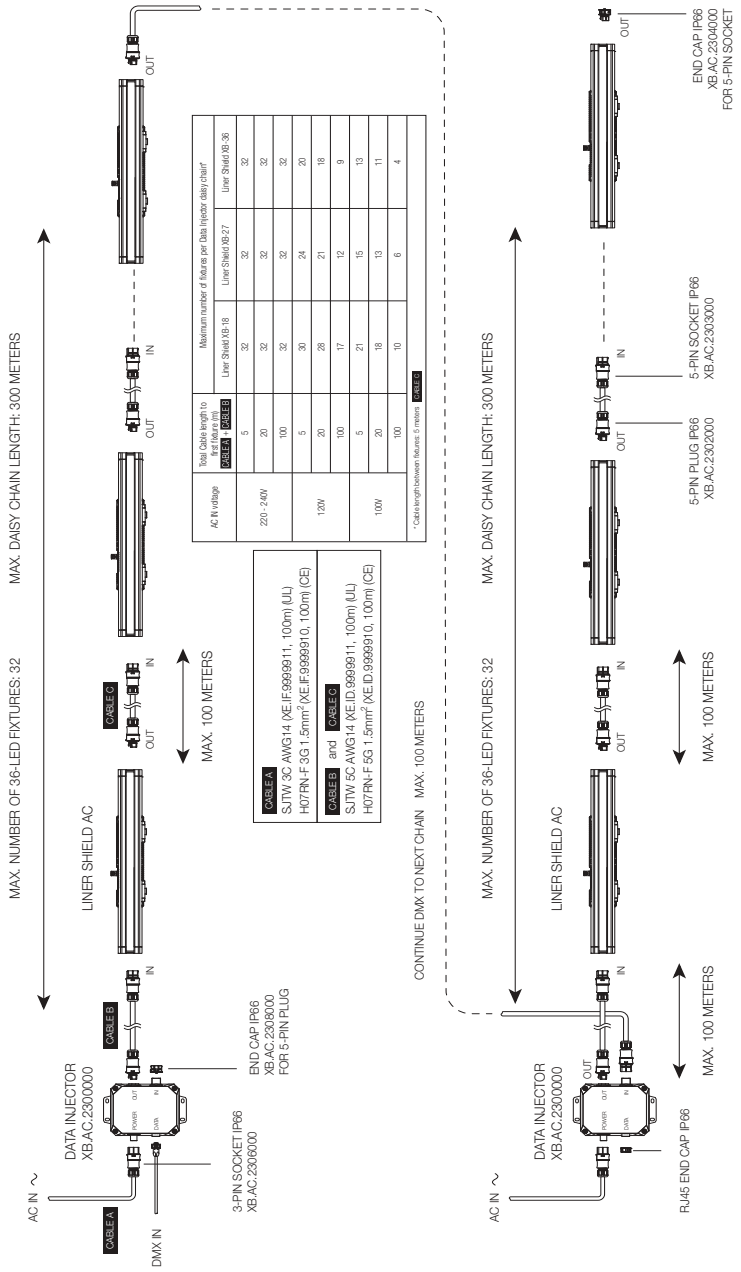

AC IN voltage	Total Cable length to first fixture (m) CABLE A	CABLE B	Maximum number of fixtures per Data Injector daisy chain* Liner Shield XB-18	Liner Shield XB-27	Liner Shield XB-36
220 - 240V	5		32	32	32
	20		32	32	32
		100	32	32	32
120V	5		30	24	20
	20		28	21	18
		100	17	12	9
100V	5		21	15	13
	20		18	13	11
		100	10	6	4

* Cable length between fixtures: 5 meters CABLE C

© 2011 TRAXON TECHNOLOGIES ALL RIGHTS RESERVED. TRAXON ™, TX CONNECT ™, LUXILED ™ ARE TRADEMARKS OF TRAXON TECHNOLOGIES. U.S. PATENTS, E.U. PATENTS, JAPAN PATENTS, OTHER PATENTS PENDING. SPECIFICATIONS ARE SUBJECT TO CHANGE WITHOUT NOTICE.

Submitting Agency:	Description: XB.L3.5381100 Project: WWTP IMPVT'S WENATCHEE Notes:	Type:
jcwrightlighting phone: 509-535-0098		A7

traxon

Liner Shield AC XB DW

Accessories

MODEL NUMBER

X B . L x . 5 3 8 x x x x

- Version number
- Cover: 1 = Clear
- Beam angle: 1 = 10°, 2 = 20°, 3 = 30°, 4 = 40x10°, 5 = Open beam, 6 = 40°
- Color: 8 = Dynamic white
- Environment: 3 = IP66
- LED type: 5 = 350mA
- Number of LEDs: 1 = 18 LEDs, 2 = 27 LEDs, 3 = 36 LEDs

STANDARD ACCESSORIES (included in delivery)

Model No.	Description
	TX CONNECT XB CMX Interconnection Cable, 400mm/15.7" (Base to head connection cable) for XB-18 / XB-36
	TX CONNECT XB CMX Interconnection Cable, 600mm/23.6" (Base to head connection cable) for XB-27

OPTIONAL ACCESSORIES

Model No.	Description
CS.MA.5000000	Micro Server
SC.JD.5080000	Light-Drive Jog DW (Black)
SC.JD.5080100	Light-Drive Jog DW (White)

TX CONNECT

Model No.	Description
XB.AC.2302000	5-Pin Field Installable Connector Plug IP66
XB.AC.2303000	5-Pin Field Installable Connector Socket IP66
XB.AC.2304000	5-Pin Connector Socket End Cap IP66
XB.AC.2308000	5-Pin Connector Plug End Cap IP66
DE.AC.0100000	RJ45 Male Connector Housing IP67, Field Installable
XB.AC.2500000	Standalone base for Liner Unit
XE.ID.9999910	AC XB Interconnection Cable, 5-wire, CE (100m/328ft reel)
XE.ID.9999911	AC XB Interconnection Cable, 5-wire, UL (100m/328ft reel)

TX POWER

Model No.	Description
XB.AC.2300000	XB Shield AC Data Injector
XE.IF.9999910	AC XB Power Cable, 3-wire, CE (100m/328ft reel)
XE.IF.9999911	AC XB Power Cable, 3-wire, UL (100m/328ft reel)
XB.AC.2306000	3-Pin Field Installable Connector Socket IP66

© 2011 TRAXON TECHNOLOGIES ALL RIGHTS RESERVED. TRAXON™, TX CONNECT™, LUXILED™ ARE TRADEMARKS OF TRAXON TECHNOLOGIES. U.S. PATENTS, E.U. PATENTS, JAPAN PATENTS, OTHER PATENTS PENDING. SPECIFICATIONS ARE SUBJECT TO CHANGE WITHOUT NOTICE.

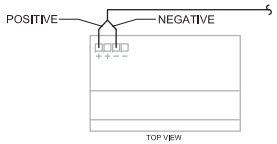

SERIES A INTEGRAL POWER SUPPLY

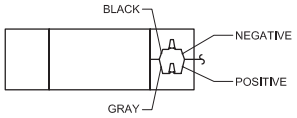

SERIES A PSO1/PSO3 POWER SUPPLY

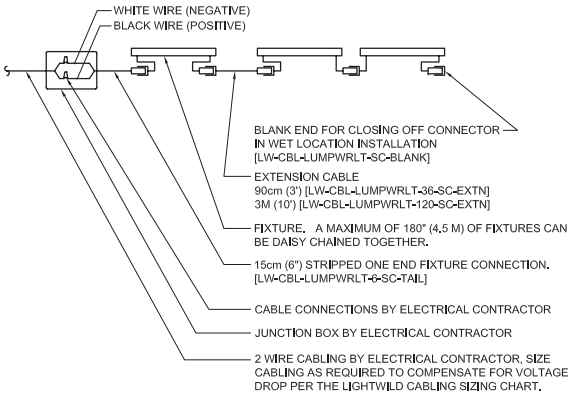

LIGHTWILD MAXIMUM CABLE LENGTH FOR A SINGLE RUN							
LOAD AT 24VDC		MAXIMUM CABLE LENGTH TO THE LAST FIXTURE IN A CABLE RUN BY WIRE SIZE					
WATTS	AMPS	#18	#16	#14	#12	#10	#8	#6
0-12	0.0-0.5	150 ft	240 ft	300 ft	300 ft	300 ft	300 ft	300 ft
12-24	0.5-1.0	75 ft	120 ft	190 ft	300 ft	300 ft	300 ft	300 ft
24-36	1.0-1.5	50 ft	80 ft	120 ft	200 ft	300 ft	300 ft	300 ft
36-48	1.5-2.0	35ft	60 ft	95 ft	150 ft	240 ft	300ft	300 ft
48-60	2.0-2.5	N/A	45 ft	75 ft	120 ft	190 ft	300 ft	300 ft
60-72	2.5-3.0	N/A	40 ft	60 ft	100 ft	160 ft	250 ft	300 ft
72-84	3.0-3.5	N/A	30 ft	55 ft	85 ft	130 ft	220 ft	300 ft
84-90*	3.5-4.0	N/A	N/A	45 ft	75 ft	120 ft	190 ft	300 ft

*90 WATTS IS THE MAX WATTAGE PER RUN FOR CLASS 2 INSTALLATIONS

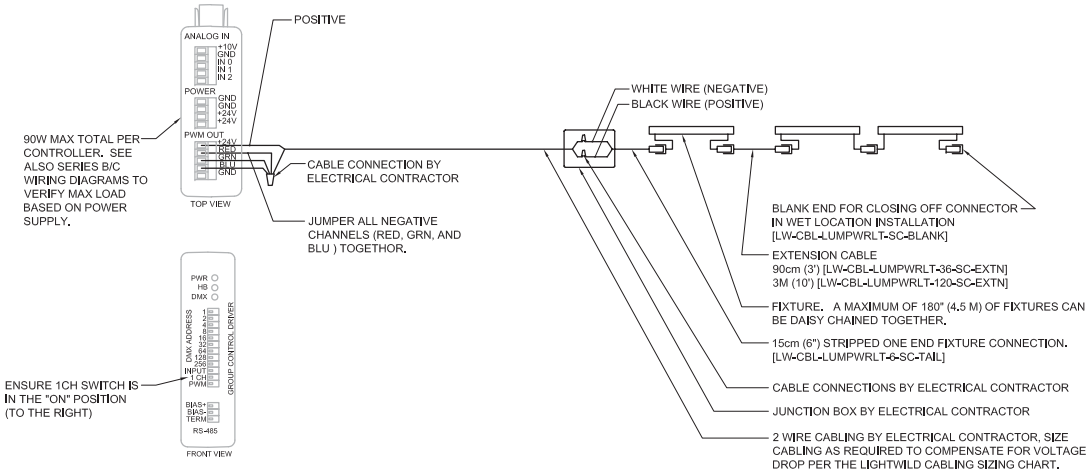

SERIES B/C LIGHTWILD LED LIGHTING CONTROLLER

LEGEND

- PREINSTALLED
- FIELD INSTALLED
- PREINSTALLED OPTION
- FIELD INSTALLED OPTION

WIRING DIAGRAMS ARE GENERIC FOR MULTIPLE PART NUMBERS. EQUIPMENT AND OPTIONS SHOWN ON THE DIAGRAM MAY NOT BE INCLUDED AS PART OF THE EQUIPMENT PROVIDED.

FIXTURES ARE SUBJECT TO CHANGE WITHOUT NOTICE.

LIGHTWILD IS THE OWNER OF ALL COPYRIGHT AND ALL OTHER INTELLECTUAL PROPERTY RIGHTS IN THIS DRAWING AND SHALL ONLY BE USED FOR PURPOSES SET OUT AND APPROVED BY LIGHTWILD. ANY ATTEMPT TO COPY OR DISTRIBUTE THIS DOCUMENT, IN WHOLE OR IN PART, OR TO USE THIS DOCUMENT WITHOUT THE EXPRESS WRITTEN APPROVAL OF LIGHTWILD IS PROHIBITED. COPYRIGHT © 2008 LIGHTWILD

LIGHTWILD
7320 W 162ND ST.
OVERLAND PARK, KS 66085
913-851-3000

PART NUMBERS
LW-LUMPWRLT-X-WW/CW/R/G/B-XX

WIRING DIAGRAM
LUMEN POWER LITE LINEAR
WHITE/SINGLE COLOR
NO SCALE

REV: 01	DATE: 07/16/2010
SCALE: NONE	SHEET: 1 OF 1

Submitting Agency:

jcwrightlighting
phone: 509-535-0098

Description: LUMPWRLT-M-WW-48.EXT,60 DEGREE
Project: WWTP IMPVT'S WENATCHEE
Notes:

Type: A8

Submitting Agency:	Description:	Type:
jcwrightlighting phone: 509-535-0098	**LUMPWRLT-M-WW-48.EXT,60 DEGREE** Project: **WWTP IMPVT'S WENATCHEE** Notes:	**A8**

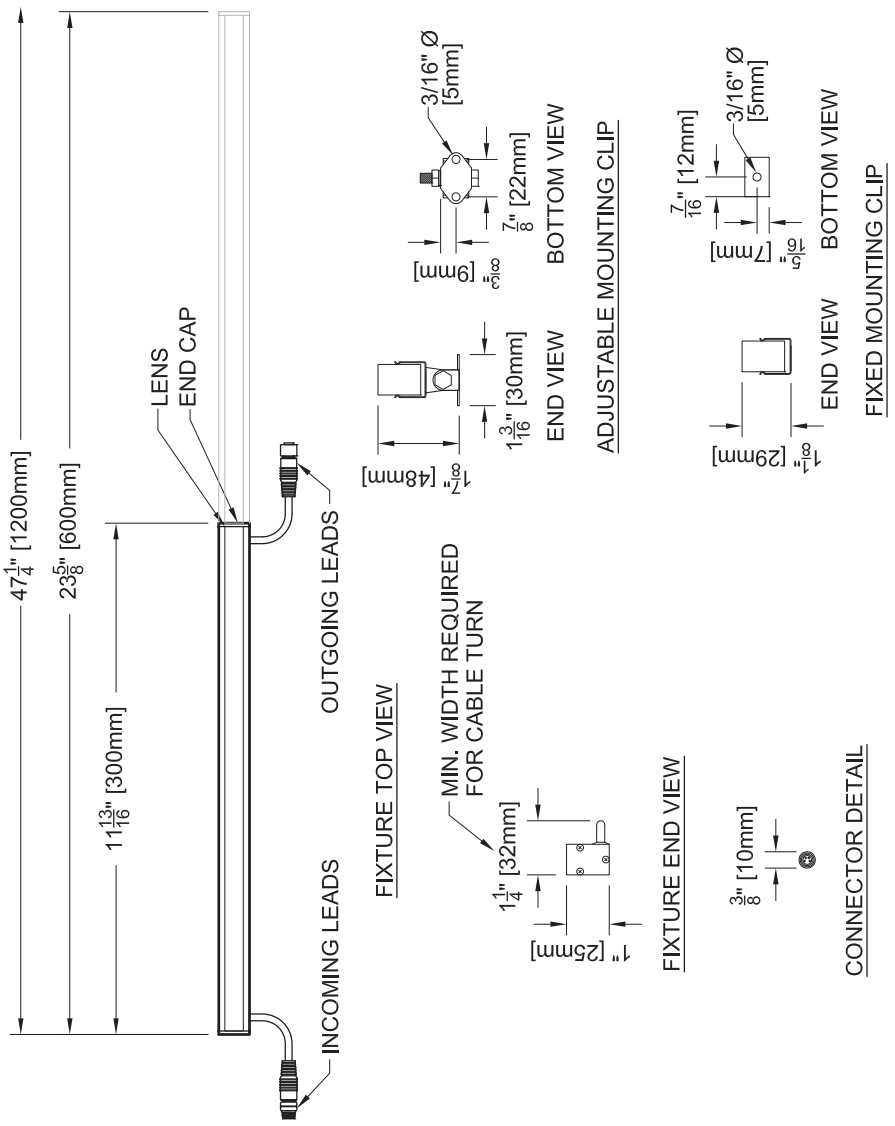

CUSTOMER DRAWING
LW-LUMPWRLT-W/M
ALL DIMENSIONS ARE APPROXIMATE

LIGHTWILD
7320 W 162ND ST.
OVERLAND PARK, KS 66085
913-851-3000

REV: 02 | DATE: 10/29/2010
SCALE: 1" = 4" | SHEET: 1 OF 1

FIXTURES ARE SUBJECT TO CHANGE WITHOUT NOTICE.

LIGHTWILD IS THE OWNER OF ALL COPYRIGHT AND ALL OTHER INTELLECTUAL PROPERTY RIGHTS IN THIS DRAWING AND SHALL ONLY BE USED FOR PURPOSES SET OUT AND APPROVED BY LIGHTWILD. ANY ATTEMPT TO COPY OR DISTRIBUTE THIS DOCUMENT, IN WHOLE OR IN PART, OR TO USE THIS DOCUMENT WITHOUT THE EXPRESS WRITTEN APPROVAL OF LIGHTWILD IS PROHIBITED. COPYRIGHT © 2008 LIGHTWILD

Submitting Agency:	Description: SL5222-*-LC5ND-JBCP150 Project: WWTP IMPVT'S WENATCHEE Notes: * = advise finish required	Type: A9
jcwrightlighting phone: 509-535-0098		

VISTA PROFESSIONAL OUTDOOR LIGHTING

Type: _____

Model: _____

Project: _____

SPECIFICATION SHEET

MODEL: 5222 - *12V SERIES:* Step & Brick Lights

SPECIFICATIONS:

HOUSING:
Injection-molded, glass-reinforced Ryton® R-4 composite for strength & high UV stability – warranted for ten years against corrosion. The cover plate is fitted to the recessed box with a silicone o-ring gasket – providing a superior weather-tight seal.

FINISH:
Available in Black, Verde, Architectural Brick, Light Bronze, Dark Bronze, Granite, Terra-cotta, Rust, Hunter Green, Mocha, Weathered Bronze, Weathered Iron, and White.

SOCKET/LAMP HOLDER:
Top grade ceramic socket with nickel contacts, stainless steel springs, & Teflon-jacketed wire leads.

LENS:
Frosted, tempered, shock & heat-resistant, soda-lime glass lens - crowned (convex) to increase beam spread.

LAMP TYPE:
MR-16 Halogen – 35W maximum. LN-20 BAB (20W) Standard.
(See back page for LED lamp specifications)

MOUNTING:
Recessed mounting box has two ½" NPT inlets. Optional concrete mounting kit available, please see accessories column on fixture ordering information.

FASTENERS/INSERTS:
All fasteners are stainless steel with brass inserts.

WIRING:
Provided with a three-foot pigtail of 18-2 direct-burial cable & underground connectors for a secure connection to the supply cable.

CERTIFICATION:
UL Listed to U.S. & Canadian safety standards for low voltage landscape luminaires (UL 1838). The maximum wattages allowed by Underwriters Laboratories (UL) for the U.S. & Canadian markets may vary. Maximum wattages specified are Underwriters Laboratories U.S. standard. Please contact Vista for any questions about the maximum wattages allowed by UL Canadian standards.

All Vista luminaires are **MADE IN THE U.S.A.**

DIMENSIONS:

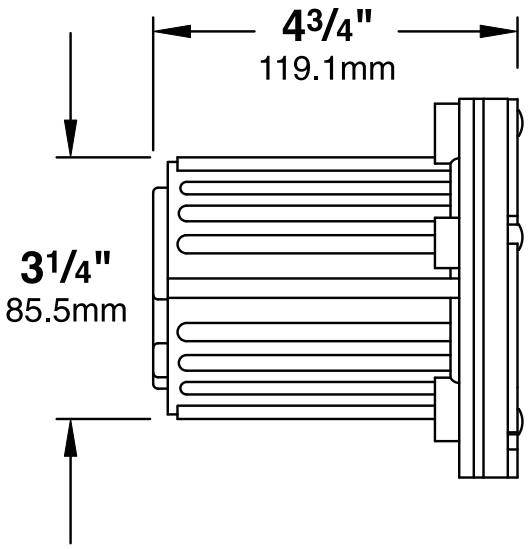

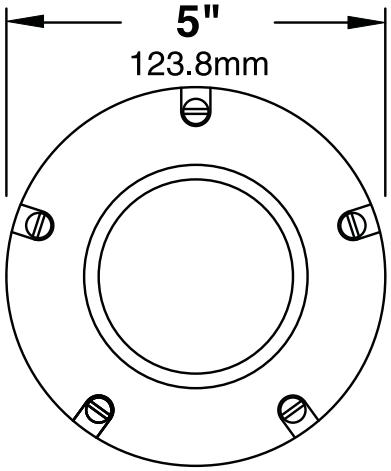

c UL US LISTED

In an effort to improve product design U.S.T.E., Inc. reserves the right to modify the specifications of this fixture.

1625 Surveyor Avenue • Simi Valley, CA 93063 • (805) 527-0987 • (800) 766-VISTA (8478)
FAX: (888) 670-VISTA (8478) • email@vistapro.com • www.vistapro.com

Submitting Agency:	Description: SL5222-*-LC5ND-JBCP150 Project: WWTP IMPVT'S WENATCHEE Notes: * = advise finish required	Type: A9
jcwrightlighting phone: 509-535-0098		

VISTA PROFESSIONAL OUTDOOR LIGHTING

SPECIFICATION SHEET

LED LAMP SPECIFICATIONS (if applicable) :

LAMP TYPE:
Lumiled Rebel High Output LED with Vista exclusive smart-driver, powered to operate for 50,000 hours.
OPTICS:
Integral high-efficiency optics available in spot through flood beam spreads.
ELECTRICAL:
Input voltage range 6–15V AC, regulated to achieve uniform illumination throughout the cable run of fixtures. Integral surge & reverse polarity protection.

FIXTURE ORDERING INFORMATION

TO ORDER FIXTURE: Select appropriate choice from each column as in the following example

EXAMPLE: SL-5222-B-BAB-BL

MOUNTING	MODEL	FINISH	LAMP	ACCESSORIES
SL- Step light	**5222**	**B** - Black **G** - Verde **BR** - Architectural Brick **LZ** - light Bronze **DZ** - Dark Bronze **GT** - Granite **TC** - Terra-cotta **R** - Rust **HG** - Hunter Green **M** - Mocha **WB** - Weathered Bronze **WI** - Weathered Iron **W** - White	(Please see lamp order code column on lamp guide, Vista product catalog.)	**CBL-** Crowned Cool Blue lens **SL-** Flat Spread lens **DBL-** Flat Dark Blue lens **GL-** Flat Dark Green lens **RL-** Flat Red lens **YL-** Flat Amber lens **HL-** Honeycomb louver **JBCP-150-** Concrete mounting kit

Fixtures shipped with standard lamp, unless otherwise specified.

Submitting Agency:	Description: SL5222-*-LC5ND-JBCP150 Project: WWTP IMPVT'S WENATCHEE Notes: * = advise finish required	Type: A9
jcwrightlighting phone: 509-535-0098		

VISTA PROFESSIONAL OUTDOOR LIGHTING

Lamp Guide

LED Lamps

LED TYPE	LED NUMBER	WATTS	BEAM SPREAD	LUMINOSITY (CANDLEPOWER)	RATED LIFE (HOURS)	LED ORDER CODE
GROUP A	LA–5–SP	5	12°	1,810	50,000	LA5SP–*
Directional LED Assemblies	LA–5–FL	5	30°	394	50,000	LA5FL–*
	LA–5–WFL	5	45°	137	50,000	LA5WF–*
GROUP B	LB–2–ND	2.5	–	–	50,000	LB2ND–*
Non-Directional	LB–5–ND	5	–	–	50,000	LB5ND–*
LED Assemblies						
GROUP C	LC–5–ND	5	–	–	50,000	LC5ND–*
Non-Directional						
LED Assemblies						
GROUP E	LE–10–SP	10	12°	–	50,000	LE10SP–*
Directional LED Assemblies	LE–10–FL	10	30°	–	50,000	LE10FL–*
	LE–10–WFL	10	45°	–	50,000	LE10WF–*
	LE–30–SP	30	12°	–	50,000	LE30SP–*
	LE–30–FL	30	30°	–	50,000	LE30FL–*
	LE–30–WFL	30	45°	–	50,000	LE30WF–*
GROUP F	LF–3–SP	5	12°	877	50,000	LF3SP–**
Directional LED Assemblies	LF–3–NF	5	20°	589	50,000	LF3NF–**
	LF–3–WF	5	50°	121	50,000	LF3WF–**
	LF–6–SP	10	12°	1873	50,000	LF6SP–**
	LF–6–NF	10	20°	1156	50,000	LF6NF–**
	LF–6–WF	10	50°	233	50,000	LF6WF–**
	LF–9–SP	17	12°	2265	50,000	LF9SP–**
	LF–9–NF	17	20°	1779	50,000	LF9NF–**
	LF–9–WF	17	50°	369	50,000	LF9WF–**

* Specify one of the following color temperatures when ordering: **(-W)** warm, **(-N)** neutral, **(-C)** cool

** Specify one of the following color temperatures when ordering: **(-W)** warm, **(-C)** cool

Submitting Agency:	Description: SL5222-*-LC5ND-JBCP150 Project: WWTP IMPVT'S WENATCHEE Notes: * = advise finish required	Type: A9
jcwrightlighting phone: 509-535-0098		

VISTA PROFESSIONAL OUTDOOR LIGHTING

Type: _____

Model: _____

Project: _____

SPECIFICATION SHEET

MODEL: JBCP-150 - *Concrete Pour Kit*

SPECIFICATIONS:

DESCRIPTION:
Stainless steel concrete pour kit for Vista in-ground lighting fixtures and junction boxes.
Self-tapping screws included.

All Vista accessories are **MADE IN THE U.S.A.**

DIMENSIONS:

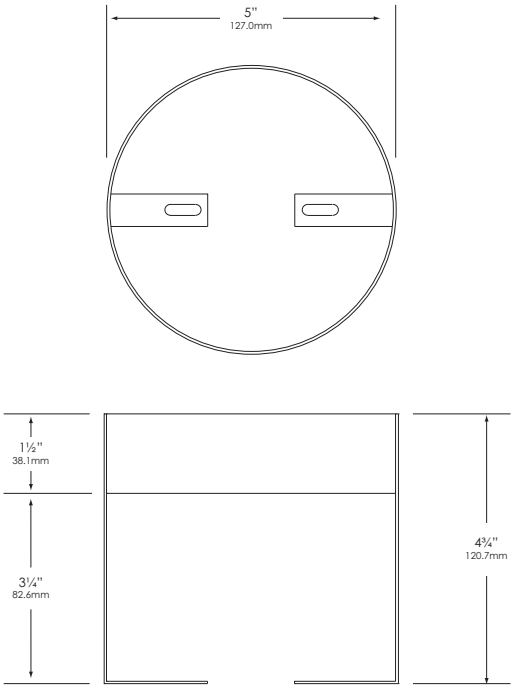

Vista Professional Outdoor Lighting reserves the right to modify the design and/or construction of the fixture shown without further notification.

1625 Surveyor Avenue • Simi Valley, CA 93063 • (805) 527-0987 • (800) 766-VISTA (8478)
FAX: (888) 670-VISTA (8478) • email@vistapro.com • www.vistapro.com

INSTALLATION AND OPERATORS GUIDE

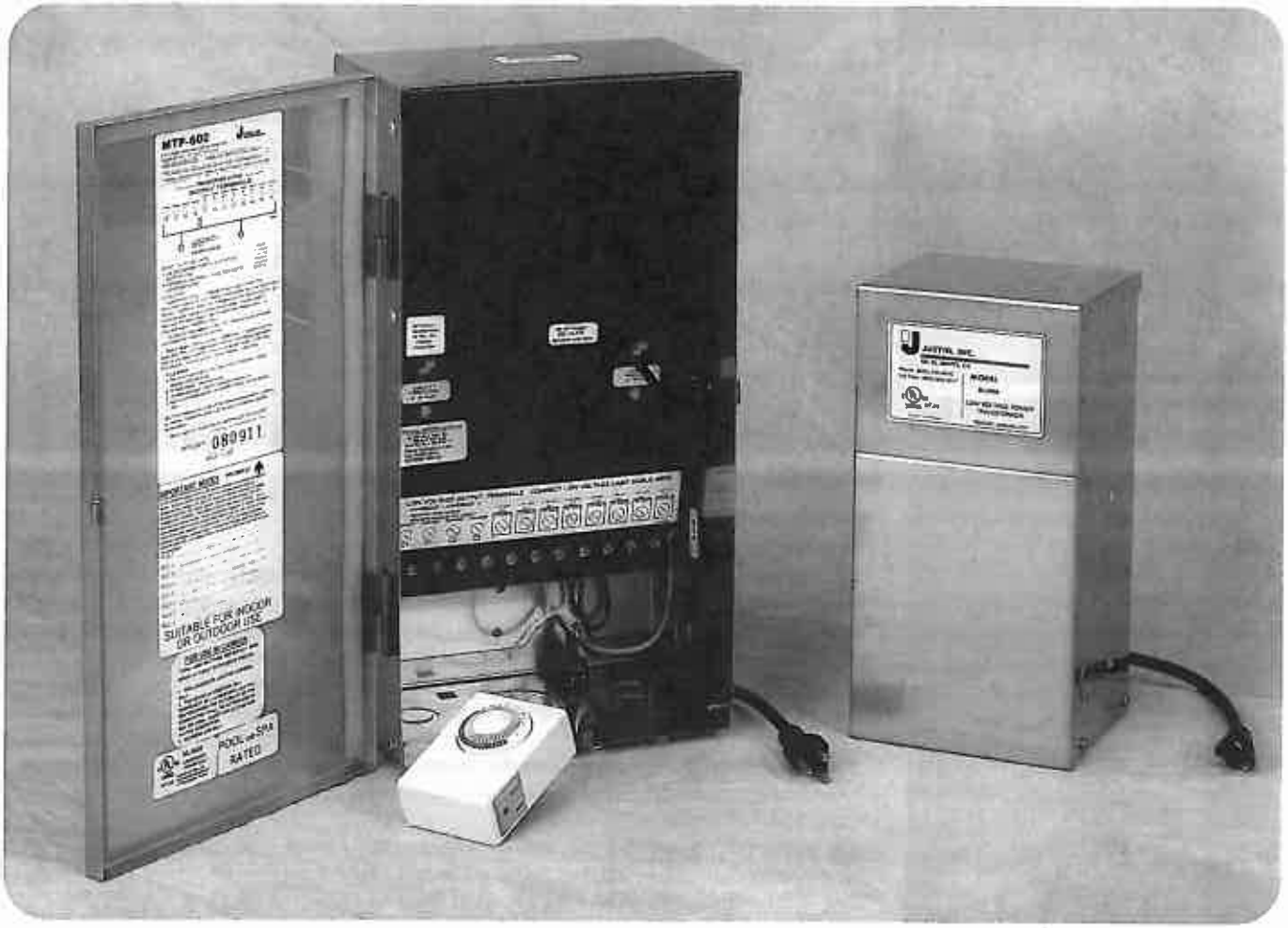

For Professional Series Landscape Lighting Transformers

Covers GL, MTP and GLP Series Transformers from 100 to 1200 watts

Made in the USA

c UL us

JUSTIN, INC.

ELECTRONIC PRODUCTS DIVISION
2563 No. Lee Avenue
South El Monte, CA 91733
626 444-4518 • Fax 626 444-9462
www.justininc.com

If you have a concern or problem with any Justin product, first contact your local distributor. For continuing or unresolved problems, contact factory technical department at (800) 989-4517 between 8:00am and 4:00 pm PST, Monday through Friday

MOUNTING INSTRUCTIONS

Warning: Transformers must be installed in accordance with the National Electrical Code (NEC) and local codes. Failure to do so will void the warranty and may result in serious injury and/or damage to the transformer.

1. Find a suitable, flat-surfaced location to mount transformer, taking into consideration proximity to 120 volt AC power source.

2. Attach provided template to wall at desired height. (Should be mounted at least 1.5' from the ground for safe and convenient operation.)

3. Center punch and drill (with an appropriate bit size for the screws to be used) at crosshair marks on the template.

4. Using appropriate screws for the selected mounting surface, insert screws into predrilled holes deep enough to slip transformer keyhole slots over. (Make sure screws are of a load bearing quality.)

5. Hang transformer case securely over screws.

6. Install security screw if desired. #10 minimum.

TRANSFORMER SIZING

Low voltage lighting systems require the use of a transformer to reduce the standard 120 volt power from ordinary household electricity to the 12 volts needed to power low voltage lamps. Transformers vary in size or capacity. The total lamp wattage (load) of all fixtures connected to one transformer must not exceed the wattage capacity of the transformer. Therefore, to determine the transformer size needed, simply add up the wattage of all lamps you plan to use + 10% for cable & connections that add hidden watts to your system.)

Transformer size = total fixture watts x 1.1

Tip: All low voltage connections must be tight and waterproof.

Select a transformer that matches as closely as possible to your total lamp wattage. For example: if you have 13 fixtures all rated at 20 watts, you will need a 300 watt transformer (13 x 20 = 260) watts plus 10% = 286). If your total wattage is too great, either divide the total load between two transformers or use a more powerful model. Selecting a transformer with about 20% higher capacity than your total lamp wattage will allow for adding a fixture or two later.

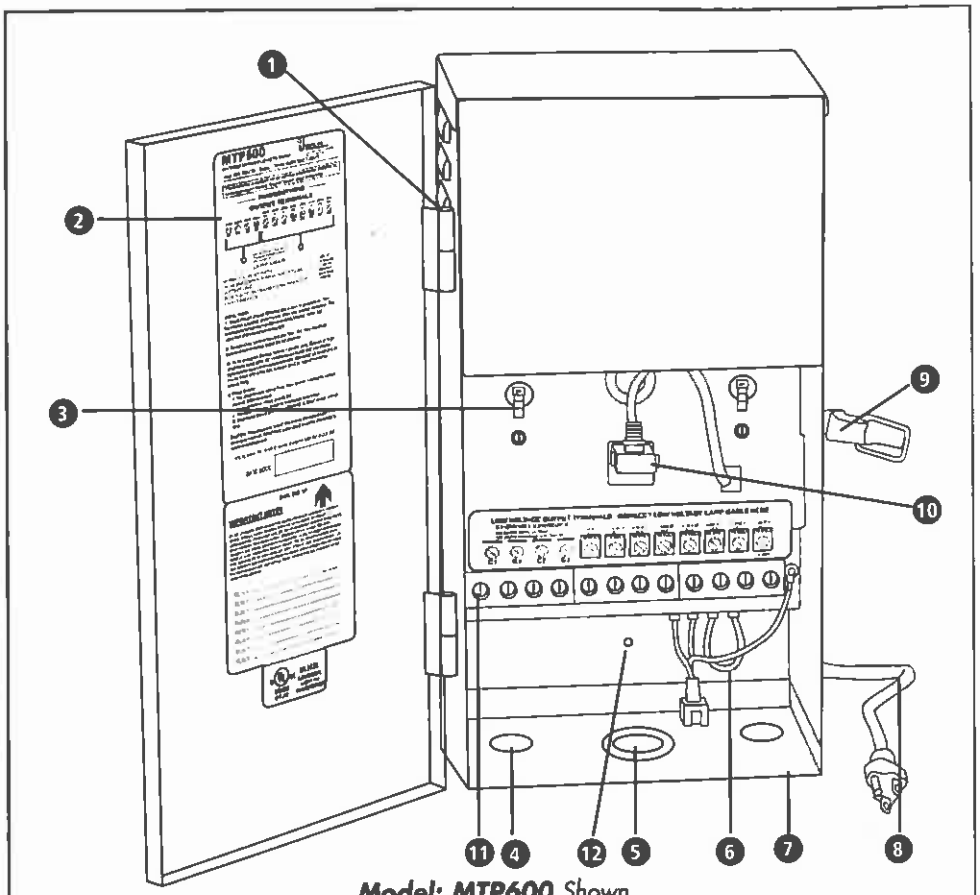

***Model: MTP600** Shown*

FEATURES AND CONTROLS

1 Take-apart stainless steel hinges
The door can be removed for greater access to wiring compartment during installation. To remove, open door and lift straight up and off of hinges. To replace, line up door hinges over pins of housing hinges and carefully push down.

2 Operating Instructions inside door.
Refer to these instructions for additional information on wiring to the transformer.

3 Magnetic overload circuit breakers
For reliable automatic secondary circuit protection. Circuit breakers may also be used as on/off rocker switches.

4 1/2" - 3/4" knockouts
For conduit and accessory mounting.

5 1-1/4" - 2" knockouts
For conduit and accessory mounting.

6 Accessory terminal strip
For easy installation of optional photocell, motion sensor, or other external switching devices.

7 Collapsible, swing-down bottom tray
Bottom tray can swing-down for greater access to wiring compartment during installation. The tray is held in place with a hinge screw and a retaining screw on each side of the transformer enclosure. Loosen the two retaining screws (nearer to the front of the enclosure on each side) and pull down on tray to open.

8 Power cord
6-foot, heavy-gauge, grounded, water-resistant power cord with integrally molded plug.

9 Lockable, stainless steel latch
Can be secured to prevent tampering.

10 120-volt accessory receptacle
For use with optional, removable multi-setting mechanical 24-hour timer or remote photocell module PCM12.

11 Terminal strip
For multiple low voltage cable connections. Cover flap opens to individually marked voltage taps.

12 Security screw hole

LOW VOLTAGE CABLE LENGTH

In planning a low voltage system, it is necessary to consider the impact of voltage drop. Because of cable's inherent resistance, voltage drops along its length; the end-of-run lamps will be dimmer than those at the beginning. Since voltage drop is a function of cable length and cable size and total fixture wattage, voltage drop can be minimized in several different ways:

- Use multiple cable runs
- Use heavy gauge cable (8 or 10 gauge)
- Shorten cable lengths or runs
- Reduce wattage of individual fixtures
- Reduce the total number of fixtures on a run
- Use multiple transformers in different locations

Cable is measured by gauge. The lower the number, the thicker the cable and the more current it carries. Cable for low voltage lighting is available in three gauges, #12-2, #10-2, and #8-2. As noted, #8-2 gauge is the largest and is capable of carrying the most current. Refer to the Cable Length Guide to estimate the maximum allowable cable length that will keep the farthest fixture from the transformer from becoming dim (below 10.5 volts). In addition to your transformer's output options, the design of your lighting system and corresponding cable layout can help minimize voltage drop (see 12-Volt Cable Layout Options, Output Adjustment Switch, and Multi-Tap Installation sections.)

Calculate Approximate Voltage Drop

Tip: Expect a voltage drop of greater than 1.5 volts when cable length is longer than recommended. Use the formula below to calculate maximum cable length.

$$V_d = \frac{L \times W \times 2}{K_c}$$

V_d = Voltage drop in the section of cable, in volts
L = Length of the section of cable (one way distance), in feet.
W = Total Watts carried by the section of cable for the lamps it supplies
K_c = 'Cable Constant', as follows:

Cable Size (AWG)	K_c
12	7500
10	11920
8	18960

12 VOLT CABLE LAYOUT OPTIONS:

Tip: Connect all lamps in parallel. EXAMPLE: Connect one side of each lamp to 'COM' terminal, the other side to '12V' terminal.

1. Straight run installation: Fixtures run in sequence directly from the transformer.

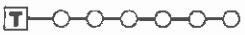

2. Loop Installation: Fixtures are arranged in a looped circuit, reducing the effects of voltage drop. See "Dual Circuit", next column.

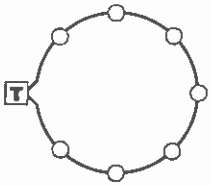

3. Split load installation or multiple cable run: Fixtures run in two or more directions from the transformer. Locating the transformer in the center of the run reduces the effects of voltage drop.

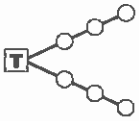

4. "T" Installation (RECOMMENDED): Allows more equal distribution of power to the center of the run, or to a run some distance away. Cable running from the transformer must be of a heavier gauge (#8 or #10).

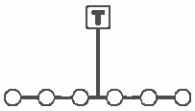

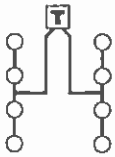

CABLE CONNECTION DETAIL

Tip: For proper connection, strip off 3/4" of cable installation, twist wire strands tightly and use a high quality straight blade screwdriver with minimum 3/16" wide tip to tighten all screw terminals firmly.

TIP: ***100-300 Watt units are single circuit, 600 Watt units are two circuits, 900 Watt units are three circuits and 1200 Watt units are four circuits.*** See installation instructions in transformer cover for single and multiple circuit output terminal details. All transformers have one manual reset circuit protector per circuit.

SINGLE CIRCUIT - 100-200 WATT - GL

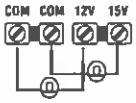

Tip: When using single circuit transformers, full rated load may be connected to one pair of 'COM 12V' or 'COM 15V' terminals.

SINGLE CIRCUIT - 300 WATT - GLP

Tip: When using single circuit transformers, full rated load may be connected to one pair of 'COM 12V' terminals.

DUAL CIRCUIT - 600 WATT - GLP

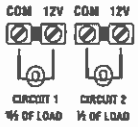

Tip: In a loop installation, low voltage polarity must be maintained by connecting the start and return of the first conductor to the 'COM' terminals, the other conductor to the '12V' terminals.

FOUR CIRCUIT - 1200 WATT - GLP

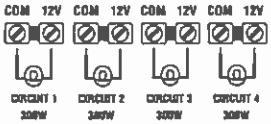

OUTPUT ADJUSTMENT SWITCH

Justin GLP transformers come equipped with a 2-position output voltage switch. Set the switch using the following as a guide.
HIGH - The correct setting in most cases. Provides expected lamp life while maintaining good brilliance..
LOW - Increases lamp life when fixtures are located very near the transformer and/or when fixtures total less than 1/2 the transformer's rated wattage.

MULTI-TAP INSTALLATION

Tip: Multi-Tap transformers supply output voltage which exceeds 12 volts. Extreme care must be taken during installation to avoid premature lamp burnout due to high voltage. Use of a voltmeter during installation is the only way to ensure a proper voltage at the fixture. As a guide when designing your job, expect a 2 volt drop for every 100 feet of 12-2 cable to which 200 Watts of evenly spaced fixtures are connected.

Refer to sample diagram. Connect one side of fixtures (common) up to 300 watts per circuit, using 12 gauge or larger direct burial cable. Strip 3/4" of cable insulation and twist wire strands tightly before insertion into transformer's output terminals. Each terminal will accept two #8, four #10, or 6 #12 wires. Tighten connector screws firmly. Connect remaining side of fixtures to output tap according to your voltage needs. Retighten all connections after one week of operation. It is always best to connect your fixtures to the 12-volt tap first, then use a voltmeter to measure the AC voltage of the fixture nearest to the transformer. Subtract the measured voltage from 12 and add the result to determine your higher tap. Example: With fixtures connected to 12-volt tap, measured voltage at first equals 10. 12 volts required at fixture minus 10 volts measured equals a 2-volt difference. Add the difference to 12 in order to determin the appropriate tap to be used. (2 + 12 = 14)

SAMPLE MULTI-TAP CONNECTION
600 WATT MTP TRANSFORMER W/2 CIRCUITS

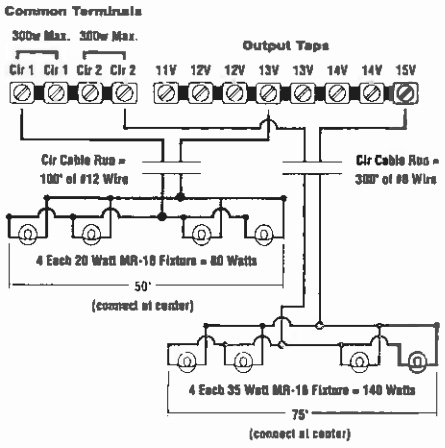

REMOTE PHOTOCELL CONTROL FUNCTION FOR PCM12 MODULES

Photocell Mounting

1. Mount photocell eye where exposed to sunlight.
2. Run photocell cable with plug end back to transformer enclosure.
3. Locate square shaped hole in enclosure bottom and feed plug through to socket on PCM12 marked "PHOTOCELL INPUT'. Plug photocell in.
4. To test, apply input power to transformer and turn photocell control knob to position 6. "DUSK TO DAWN'.
5. Cover photocell eye completely. Transformer should turn on within 5 minutes.
6. Uncover photocell eye for normal operation.

Timer Setting:

Timer does not require time-of-day setting or battery backup maintenance. It depends on the photocell "darkness signal" to begin the 'on duration' cycle. It has six modes of operation.

- By moving the dial to one of the four 'on time' switches (2, 4, 6, 8 hours), you tell the unit to turn on at darkness, begin timing, and turn off when the selected time period ends.
- With dial turned to 'DUSK TO DAWN', the timer never activates, allowing the unit to operate from dusk until dawn.
- To test your system during daylight hours, use "ALL ON /TEST" to override the photocell and turn the system on. Whenever input power is applied to the transformer, the lights will remain on.

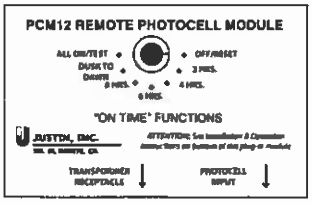

MECHANICAL TIMER SETTING PROCEDURE

1. Turn the outer rim of the timer face (the section with numbers) Clockwise until the arrow on the inner rim points to the approximate time of day.
Note: The numbers on the timer face correspond to the hours in a day. Each hour is divided into four fifteen-minute sections.
2. To set time 'ON': Locate push pegs on the outer rim of the timer face and firmly push pegs outward from the timer face until you hear and audible 'click'
Note: Each peg keeps light or appliance 'ON' for fifteen-minute sections. Use as few or as many pegs as necessary throughout the day. All pegs must be pushed out between the desired hours of on time.
3. Time 'OFF' is automatically set by leaving the pegs flush against the timer face.
Note: You can set multiple on or off programs.
4. Locate override switch on top of timer Make sure it is set to 'AUTO'.

TIP: When equipped with timer, transformer may be operated manually by sliding override switch to 'ON'.

TIMER REMOVAL & REPLACEMENT

When so equipped, the timer supplied with your new transformer is a removable (plug-in) style. Located inside the cover of the transformer enclosure. It can be pulled out and replaced with a new timer, remote photocell module, or remote control module. To replace a timer, simply grasp both sides of its plastic case and pull firmly. Next, remove the timer plug from the timer.

To install a new timer, insert timer plug into timer before plugging into transformer's timer receptacle.

INSTALLATIONN OF FIELD INSTALLED PHOTOCELL

1. Turn input power off.
2. Select a location or mount the photo control so that artificial light doesn't cause the unit to turn off. Do not install the photo control so that it directly faces the midday sun. Take care to keep the photocell EYE free of obstructions.
3. The photo control can be mounted in any approved outdoor junction box or fixture.
4. Wire the photo control according to the illustration.

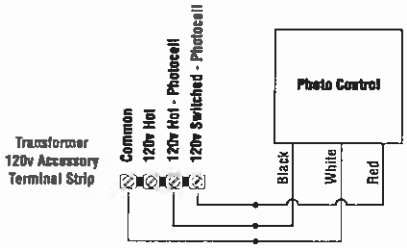

5. Switch power on. The controlled load should turn on regardless of whether you are installing the unit during the day or at night.
6. If it is daylight the control should switch off within a few minutes.
7. If a timer is also installed, it must be set to turn on during daylight hours, then off at desired time. (see below)

TIMER SETTING PROCEDURE WITH FIELD INSTALLED PHOTOCELL

The combination timer and photocell is designed for photocell-on, timer-off operation.
1. Set ON TIME during daylight hours - 2 PM or so.
2. Set OFF TIME at desired off time.
3. Set timer dial to the current time of day.

EXAMPLE: For on at dusk, off at 12 PM, PUSH OUT all 40 pins between 2 and 12 PM.

Tip: It is normal for the transformer to temporarily turn on during daylight at the timer on setting. Approximately 5 minutes is required for the photocell to stabilize and turn the unit off.
Tip: When equipped with plug-in timer and photocell, normal operation requires uninterrupted 120 volt power.

LOW VOLTAGE DIMMER

Justin transformers are ready for use with a low voltage system (inductive load) dimmer. When wired in the 120 volt line, the dimmer will allow you to adjust different levels of lamp brilliance. Your transformer will not work with any dimmer not specifically designed for low voltage systems. A dimmer can be installed at the 120v Accessory Terminal. (Item LVD 1000K)

TROUBLESHOOTING CHECKLIST

Although low voltage lighting systems operate with a minimum of maintenance, occasionally some problems will occur. Here are solutions to some of the most common problems.

Entire system will not operate
1. Check 120-volt outlet to ensure you have power to outlet.
2. Check or reset circuit breakers on transformer
3. Check low voltage cable connection at transformer.
4. Check transformer alone by disconnecting low voltage cable from output terminals, by passing timer and/or photocell.

System operates for 15 minutes, and then turns off.
1. Timer incorrectly set. See setting procedure.

Circuit breaker on transformer trips
1. Check end of cable to ensure copper strands are not touching.
2. Check connection of cable at transformer to ensure copper strands are not touching.
3. Recalculate total wattage to ensure that you have not exceeded rated wattage of transformer or circuits.
4. Check for other shorts at fixture connection points.

PRODUCT WARRANTY

ALL JUSTIN, INC. TRANSFORMERS AND CONTROLS (EXCLUDING PLUG-IN TIMERS AND PHOTOCELLS) ARE GUARANTEED TO BE FREE OF DEFECTS IN WORKMANSHIP AND MATERIALS WITH NORMAL USE FOR A PERIOD OF 10 YEARS FROM THE DATE OF MANUFACTURE STAMPED ON EACH UNIT. LIMITED LIFETIME WARRANTY ON STAINLESS STEEL UNITS. FOR WARRANTY SERVICE, THE PRODUCT MUST BE SHIPPED PREPAID TO THE FACTORY IN ITS ORIGINAL PACKING CARTON. JUSTIN, INC. RESERVES THE RIGHT TO MAKE THE FINAL DETERMINATION REGARDING WARRANTY VALIDATION. ANY TRANSFORMER JUDGED IN WARRANTY WILL BE REPAIRED OR REPLACED AND RETURNED TO IT'S OWNER AT NO ADDITIONAL COST. ANY UNIT JUDGED OUT OF WARRANTY WILL, AT THE OWNER'S OPTION, BE EXCHANGED WITH A NEW UNIT AND CHARGED AT OUR CURRENT PRICING, RETURNED FREIGHT COLLECT

TRANSFORMER INPUT MODIFICATION
POOL AND SPA USE

1. In order to shorten the transformer 120 volt input cord as required for use with pool and spa luminaries, locate the cord's plastic strain relief bushing at the entry to the transformer enclosure. (An alternate way to satisfy the pool and spa requirement would be to "hard wire" or "conduit wire" the transformer input. In this case, the input cord would be removed or disabled.)

2. Follow the steps below to detach the cord bushing from the transformer enclosure and move it down the cord so that only 3' of input cord remain between the enclosure and the end of the plug. Disconnection of the white, black and green leads from the transformer are not required during this process.

3. Using pliers or a flat bladed screwdriver, depress the clips holding the bushing to the square enclosure hole while pulling the cord from the bottom.

4. The bushing should now be free of the enclosure, but still clamped around the cord. With your flat bladed screwdriver, insert the blade opposite the clamp hinge point of the plastic strain relief bushing and carefully pry off, releasing the clip inside without damaging the bushing. The bushing clamp should now swing free of the cord.

5. Taking care to locate the large flange of the bushing toward the cord plug, re-clamp the bushing at the proper cord length of 3'. Channel-lock pliers should be used to apply adequate pressure for re-clamping the bushing.

6. Pushing the excess cord inside the enclosure through the square cord hole, snap the bushing into the hole. The modification is now complete. For a cleaner installation, the portion of the cord inside the enclosure can be cut and discarded. Make sure to leave enough cord inside the transformer wiring compartment to re-strip its jacket and leads for re-connection.

Submitting Agency:	Description: GDG-30-W-SQ- PVDS-80-***K-120V/FB-CPS-1 Project: WWTP IMPVT'S WENATCHEE Notes: ***K = advise color temp required	Type:
jcwrightlighting phone: 509-535-0098		A10

Forever Bright

SPECIFICATION FEATURES

Finish:	Our naturally etched finishes will withstand the test of time. All finishes are individually treated insuring consistency. Our meticulous application results in a fixture that truly becomes "a one of a kind".
Lens:	Tempered glass, secured with a high temperature adhesive
Gasket:	Housing is sealed with a high temperature "O" ring gasket
Housing:	Machined corrosive-resistant solid brass
Electrical:	Available in 9v-18v, 120v & 277v
Labels:	ETL Standard Wet Label C-ETL

Model: **SPJ-GDG-30W-SQ**

LED Recessed

Interior / Exterior
- Wall

DESCRIPTION

Model#:	SPJ-GDG-30W-SQ
Lamp:	3W-FB-LED Cree XRE Dimmable
Color Temp:	2750 k
Optic:	80 Degree
Lens:	Sandblasted - *optional*
Electrical:	9-18V

Concrete Pour Sleeves

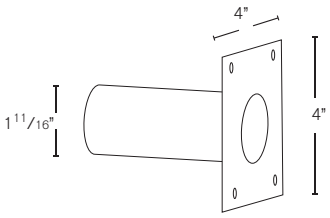

CPS1-4

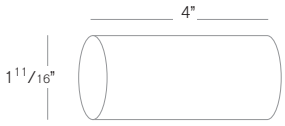

FB-CPS-1

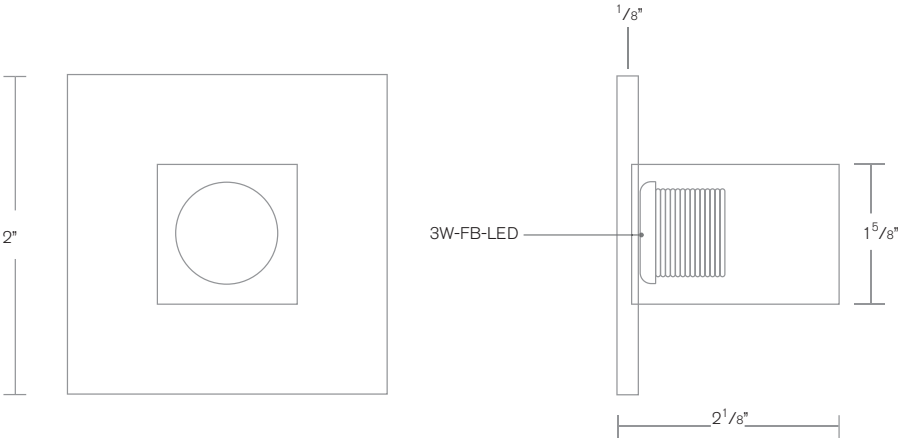

ORDERING INFORMATION

Model#	Finishes	Optic	Color Temp.	Electrical
SPJ-GDG-30W-SQ	**	80º	****K	120

SPJ-GDG-30W-SQ

V = Verde	GM = Gun Metal	10º	2750K
M = Moss	B = Black	25º	3900K
AG = Aged Brass	R = Rusty	45º	6000K
MBR = Matte Bronze	PVDP = PVD Polished	80º	
SB = Satin Brass	PVDS = PVD Satin	BP2	
		BP4	

9-18V
120V
277V

WWW.SPJLIGHTING.COM

Submitting Agency:	Description: 1079-G-W-FL-M-120 Project: WWTP IMPVT'S WENATCHEE Notes:	Type:
jcwrightlighting phone: 509-535-0098		A13

VISTA PROFESSIONAL OUTDOOR LIGHTING

Type: _____

Model: _____

Project: _____

SPECIFICATION SHEET

MODEL: 1079 *120V SERIES:* Up & Accent Lights

SPECIFICATIONS:

HOUSING:
Die-cast, copper free aluminum.
SHROUD:
Available with medium shroud (M) or without shroud (N). Medium shroud integrally molded with housing and aimable 359° about knuckle base.
FINISH:
Polyester powder-coat finish available in Black, Verde, Architectural Brick, Architectural Bronze, Light Bronze, Dark Bronze, Granite, Pewter, Terra-cotta, Rust, Hunter Green, Mocha, Weathered Bronze, Weathered Iron, and White.
LENS:
Clear soda lime glass.
LAMP TYPE:
Nine (9) White High Output LED emitters, with Vista exclusive driver, powered to operate for 50,000 hours. Available in Warm (W) or Cool (C) color temperatures.
OPTICS:
Injection-molded optical grade acrylic available in
Spot (SP), Flood (FL), and Wide Flood (WF) distributions.
ELECTRICAL:
120V or 240V 50/60Hz input. UL recognized, high efficiency toroidal transformer; offering quiet operation, low temperature rise, and low no-load losses. Constant current driver output, producing 12.6 Watts of High Output LED illumination. Consuming 17 system watts.
MOUNTING:
Injection-molded, Ryton R4® adjustable knuckle with ½" NPS stem. Fixture may be mounted into threaded hubs in junction boxes and tree mount boxes (See list of accessories under Vista products for ordering code).
FASTENERS:
All fasteners are stainless steel.
WIRING:
Prewired with 200°C rated wire and grounded lead.
CERTIFICATION:
UL Listed to U.S. and Canadian safety standards for low voltage LED landscape luminaires (UL 8750). Also, UL listed for line-voltage lighting fixtures (UL 1598). The maximum wattages allowed by Underwriters Laboratories (UL) for U.S. and Canadian markets may vary. Maximum wattages specified are Underwriters Laboratories U.S. standard. Please contact Vista for any questions about the maximum wattages allowed by UL Canadian standards.

All Vista luminaires are MADE IN THE U.S.A.

DIMENSIONS:

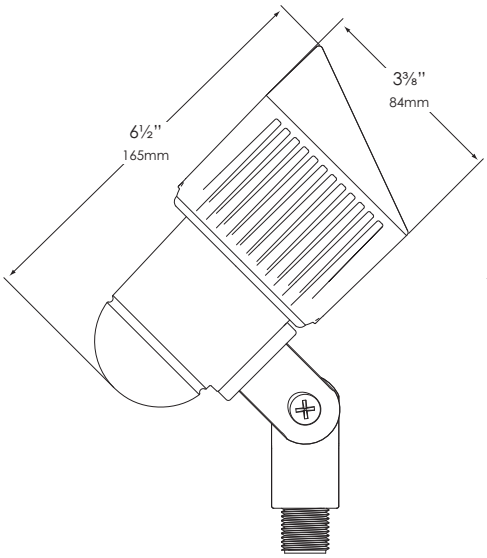

Medium Shroud (M)

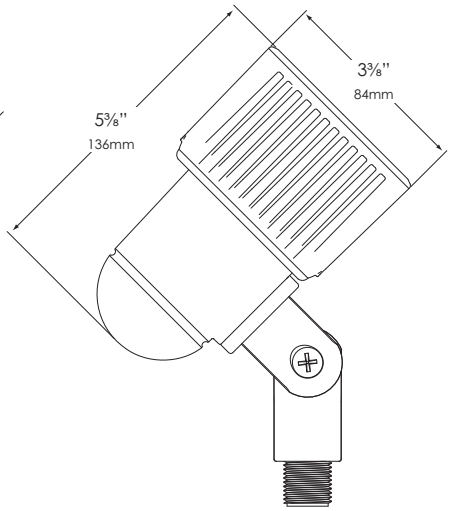

No Shroud (N)

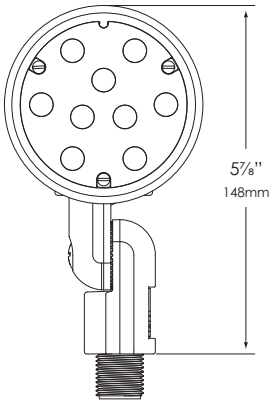

Vista Professional Outdoor Lighting reserves the right to modify the design and/or construction of the fixture shown without further notification.

1625 Surveyor Avenue • Simi Valley, CA 93063 • (805) 527-0987 • (800) 766-VISTA (8478)
FAX: (888) 670-VISTA (8478) • email@vistapro.com • www.vistapro.com

Submitting Agency:	Description: 1079-G-W-FL-M-120 Project: WWTP IMPVT'S WENATCHEE Notes:	Type:
jcwrightlighting phone: 509-535-0098		A13

VISTA PROFESSIONAL OUTDOOR LIGHTING

SPECIFICATION SHEET

FIXTURE ORDERING INFORMATION

TO ORDER FIXTURE: Select appropriate choice from each column as in the following example

EXAMPLE: 1079-B-W-SP-M-240

MODEL	FINISH	COLOR TEMP.	DISTRIBUTION	SHROUD	VOLTAGE
1079	**B-** Black **G-** Verde **BR-** Architectural Brick **Z-** Architectural Bronze **LZ -** Light Bronze **DZ -** Dark Bronze **GT-** Granite **P-** Pewter **TC-** Terra-cotta **R-** Rust **HG-** Hunter Green **M-** Mocha **WB-** Weathered Bronze **WI-** Weathered Iron **W-** White	**W** - Warm **C** - Cool	**SP** - Spot **FL** - Flood **WF** - Wide Flood	**M** - Medium **N** - No Shroud	120 240

Fixtures shipped with standard lamp, unless otherwise specified.

Vista Professional Outdoor Lighting reserves the right to modify the design and/or construction of the fixture shown without further notification.

1625 Surveyor Avenue • Simi Valley, CA 93063 • (805) 527-0987 • (800) 766-VISTA (8478)
FAX: (888) 670-VISTA (8478) • email@vistapro.com • www.vistapro.com

PRODUCT DATASHEET
SL/SLX-5/8/9ES-1/2/3

Sixnet

UNMANAGED INDUSTRIAL ETHERNET SWITCHES

The SL/SLX-5ES and SL/SLX-8/9ES are 5 and 8/9 port industrial Ethernet switches that provide advanced performance that enables you to achieve real-time deterministic operation. These ruggedized switches are industrial hardened to provide superior reliability. They require no user setup and immediately start operating as soon as you power them up. Sixnet switches are designed to make your job easier, ensuring your system will keep running for many years to come.

PRODUCT HIGHLIGHTS

- Slim packaging fits on your DIN rail
- High performance and value
- Truly industrial hardened design
- Plug & play saves you time and money

REAL-TIME ETHERNET PERFORMANCE

- Fast wire-speed switching
- Intelligent message routing - No collisions!
- Ideal for any system

PLUG & PLAY SIMPLICITY

- Auto-sensing for speed and duplex
- Auto-mdi/mdix-crossover works with straight or crossed cables
- Auto-polarity corrects for crossed signals

TROUBLE FREE OPERATION

- Ultra-reliable 1,000,000+ hours MTBF
- Dual power inputs with industrial spike protection
- DIN rail or direct panel mounting
- UL/CSA (CUL), CE, hazardous locations (Zone 2) and maritime rated
- -40 to 85°C operating range (SLX models)

Sixnet Knows Industrial

We have been designing industrial hardware such as Remote Terminal Units for over 30 years and have used this expertise to design the toughest Ethernet switches on the market. Don't trust your critical communications to so-called industrial hardware from commercial switch manufacturers. Sixnet switches give you proven assurance that your system will keep running for years to come.

SL Model

SLX Model

ITEM 509

UNMANAGED INDUSTRIAL ETHERNET SWITCHES SPECIFICATIONS SL/SLX-5/8/9ES-1/2/3

ETHERNET PERFORMANCE

- Unmanaged with 5, 8 or 9 Ethernet ports
- Store & forward wire-speed switching
- Automatic address learning, aging and migration
- Full duplex operation with flow control (no collisions)
- All IEEE 802.3 Ethernet protocols supported
- 1024 MAC addresses supported
- Memory bandwidth 3.2 Gbps
- Typical latency (varies on load)
  - @ 100 Mbps: 5 µs + frame time
  - @ 10 Mbps: 16 µs + frame time
- Ethernet isolation 1500 VRMS 1 minute

ETHERNET PORTS

- Shielded RJ45 ports for 10/100BaseTX
  - Auto-negotiation for 10 or 100 Mbps
  - Auto- MDI/MDIX-crossover for either cable type
  - Auto-polarity corrects for crossed +/- signals
- Fiber optic port speed 100BaseFX (100 Mbps)
- Fiber duplex operation: Full duplex
- Fiber wavelength: 1300 nm center (typical)
- Fiber max. distance (full duplex) (see web for details)
  - 4 km for multimode 50 or 62.5/125 µm (SC or ST)
  - 20 km for singlemode 9 or 10/125 µm (SC or ST)
  - 40 km (long haul) or more (contact Sixnet)

ETHERNET COMPLIANCE

- IEEE 802.3 (10Mbps Ethernet supports legacy devices)
- IEEE 802.3u (Fast Ethernet 100Mbps for newer devices)
- IEEE 802.3x (Full-Duplex with Flow Control)

POWER INPUT

- Power input voltage: 10-30 VDC
- Redundant input terminals
- Input power (typical - all ports active at 100 Mbps)
  - 2.0 W (5-port without fiber)
  - 3.0 W (5-port including 1 fiber)
  - 4.0 W (8-port without fiber)
  - 5.0 W (9-port including 1 fiber)
- Transient protection: 15,000 watts peak
- Spike protection: 5,000 watts (10 times for 10 uS)

ENVIRONMENTAL

- Operating temperature
  - SL -5ES models: -10 to +60°C
  - SL -6/8/9 ES models: -40 to +60°C
  - SLX models: -40 to +85°C (cold startup at -40)
- Storage temperature: -40 to +85 °C
- Humidity (non-condensing) 5 to 95% RH
- Vibration and shock: IEC60068-2-6

STANDARDS COMPLIANCE

- Electrical safety - UL508/CSA C22.2/14, EN61010-1, CE
- EMC - FCC part 15, ICES-003, EN55022, EN61000-6, CE
- Hazardous locations: UL1604/CSA C22.2/213 (Class I, Div. 2); EN60079-15 (Zone 2, Category 3), CE (ATEX)
- Maritime rated for marine & offshore per ABS
- Eye safety (fiber models) - IEC60825-1, Class 1; FDA 21 CFR 1040.10 and 1040.11

PHYSICAL

- DIN rail or direct panel mounting
- Ingress protection: IP30
- Case: UL94V0 Lexan (SL) or Aluminum (SLX)
- Weight:
  - o 4 oz (0.11 kg) – SL-5ES
  - o 6 oz (0.17 kg) – SLX-5ES, SL-8/9ES
  - o 8 oz (0.23 kg) – SLX-8/9ES
- Dimensions – see mechanical diagram below

All specifications are subject to change. Consult factory for latest info.

MECHANICAL DRAWINGS

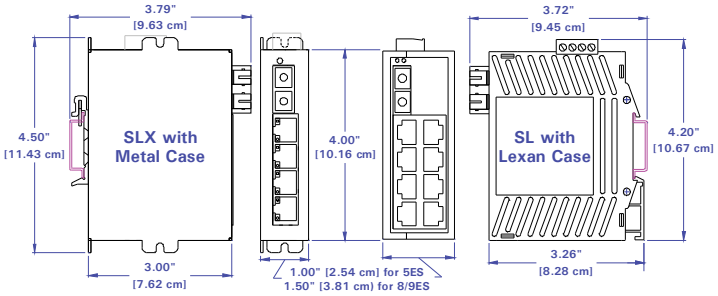

See the User Manual for a More Detailed Diagram

ORDERING GUIDE

SLX-5ES-1	5 RJ45 10/100 ports
SLX-5ES-2SC	4 RJ45 ports and 1 mm fiber SC, 4 Km
SLX-5ES-2ST	4 RJ45 ports and 1 mm fiber ST, 4 Km
SLX-5ES-3SC	4 RJ45 ports and 1 sm fiber SC, 20 Km
SLX-5ES-3ST	4 RJ45 ports and 1 sm fiber ST, 20 Km
SLX-6ES-4/5	Dual fiber - see separate datasheet
SLX-8ES-1	8 RJ45 10/100 ports
SLX-8ES-6/7	Three fiber - see separate datasheet
SLX-9ES-2SC	8 RJ45 ports and 1 mm fiber SC, 4 Km
SLX-9ES-2ST	8 RJ45 ports and 1 mm fiber ST, 4 Km
SLX-9ES-3SC	8 RJ45 ports and 1 sm fiber SC, 20 Km
SLX-9ES-3ST	8 RJ45 ports and 1 sm fiber ST, 20 Km
SL-	w/Lexan case and limited temperature
ET-PS-024-02	2 Amp, AC to 24 VDC Power Supply
SP-ETH-2	Dual Ethernet port surge & lightning protector

Contact Sixnet for special or long haul fiber transeivers up to 120 Km.

Sixnet
331 Ushers Road • Ballston Lake, NY 12019 • USA
+1.518.877.5173 • Fax +1.518.877.8346 • sales@sixnet.com

ITEM 701

Adapter Panel, Fiber Optic, 6-Fiber, ST, Zirconium Insert, Multimode/Singlemode

ITEM #:
AP-VAAWC6

Description:	**Adapter Panel, Fiber Optic, 6-Fiber, ST, Zirconium Insert, Multimode/Singlemode**
Item #:	**AP-VAAWC6**

e:cue

LIGHTING CONTROL

Lighting Control Engine
Lighting Control Engine fx

Setup Manual

LCE/LCE-fx Setup Manual

Edition/Ausgabe: 30.04.13

Published by/Herausgegeben von:

Traxon Technologies Europe GmbH
Karl Schurz-Strasse 38
Paderborn, Germany

©2012, Traxon Technologies Europe GmbH
All rights reserved/Alle Rechte vorbehalten

Comments to/Kommentare an:
documentation@traxontechnologies.com

Table of Contents

Security instructions **4**
About the Lighting Control Engine 5
Differences LCE and LCEfx 5
Highlights 6

Delivery Content & Accessories **6**
Included in the package 6
Optional accessories 6
Transport 7
Cleaning 7

Commissioning **7**
Inspect the delivery content 7
Set up the device 7
Rack mounting 8

Installation location **9**

ME2 connections **10**
MIDI/dry contact input configuration 11

Initial start up **12**
System Configuration 12
Setting the network address 13
Adjust the Programmer's network settings 16

Performing maintenance **17**
Lighting Control Engine - System Configuration 17
Open the server housing 17
Replacing hard drives 17
Battery replacement 17

Technical data **18**

Dimensions **20**

Appendix **21**
LCE connections 21
LCEfx connections 22

Security instructions

To reduce the risk of personal injury, electric shock, or damage to the equipment, remove the power cord to remove power from the server. Portions of the power supply and some internal circuitry remain active until AC power is removed.

To prevent the device from overheating, only operate it in well-ventilated environment. Ventilation slots may not be obstructed. Do not install next to heat emitting sources or in a place subject to direct sunlight or excessive dust.

Device components inside the system can reach high temperatures! Do not open the system while in operation. Repairs may only be carried out by authorized, specially trained personnel. When in doubt, contact e:cue service.

Installation and maintenance of this product must be performed by individuals who are knowledgeable about the procedures, precautions and hazards associated with the product.

About the Lighting Control Engine

Designed to control large and complex projects, the Lighting Control Engine (LCE) is a high performance server with the e:cue software suite pre-installed. As a central control unit this versatile lighting control server orchestrates all devices and fixtures within a project. The LCE is able to output DMX/RDM, e:net, and other protocols such as KiNet and Art-Net. This and the capability to integrate various audio/video, external triggering as well as other devices and content, the LCE is the ultimate solution for the most demanding projects. A built-in touch-screen monitor on the front panel of the attractive, durable aluminum casing provides user interaction with custom graphic user interface designs. The LCE can be mounted in a 19-inch rack.

Differences LCE and LCEfx

	LCE	**LCEfx**
Video interfaces	1 x DVI 1 x HDMI (VGA internal for touch-screen)	2 x DVI 1 x HDMI 1 x Display Port (VGA internal for touch-screen)
RS-232 interfaces	2	4
e:net interfaces	2	3

Highlights

- Integrated touch-screen for control and monitoring
- Pre-installed e:cue Lighting Application Suite
- Reliable, uninterrupted operation
- Supports various Ethernet-based protocols
- Control of up to 65,536 DMX channels
- Easily mountable in a standard 19” rack
- Integration of media content
- 2 x RS232 (LCE), 4 x RS-232 (LCEfx)
- 16 digital dry contact inputs
- Ethernet (e:net)
- MIDI interface

Delivery Content & Accessories

Included in the package

- e:cue System Manual Basic
- e:cue System Manual Advanced
- DIN A6 Setup Manual
- HDMI to DVI adapter
- Screw driver
- 2 m CAT5e SFTP cable
- AC power cord DE, UK, US
- Rack mount kit

Optional accessories

- AC power cord AU PS.AC.0000.400
- AC power cord JP PS.AC.0000.500

Transport

Only transport the LCE in its original packaging. This protects the server from damage. Only unpack the LCE at its installation location. To protect the device against condensation water, unpack it and wait until all moisture remaining in the LCE has evaporated. Condensation can occur when the device is moved from a cold to a warm location.

Cleaning

To clean the device, disconnect it from the line power supply. Disconnect all devices connected to the server. Depending on the operating environment, the server interior must be cleaned. This cleaning may only be carried out by skilled personnel. Do not use any cleaning agents containing solvents (e.g. acetone, alcohol or thinner) or abrasives. The housing surface and touch-screen can be cleaned with a moist, lint-free cloth. Ensure that no water penetrates into the housing. Otherwise, this could damage the electronics.

Commissioning

Inspect the delivery content

Unpack the LCE and inspect all parts for completeness. Keep the packaging for use in case of further transport. If there is apparent damage to the device or parts are missing from the delivery scope, please contact e:cue service.

Set up the device

You can use the LCE as a desktop or rack-mounted device. As delivered, the server is configured as a desktop device. The hardware for mounting in a 19” rack is included in the delivery scope. To mount in a rack, fasten the rack brackets and 19” installation brackets to the server. Then, fasten the brackets to the front and rear of the server rack.

Rack mounting

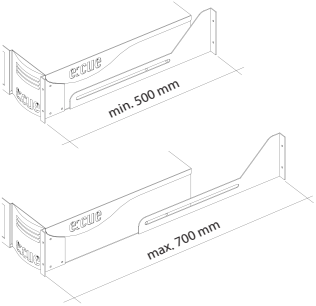

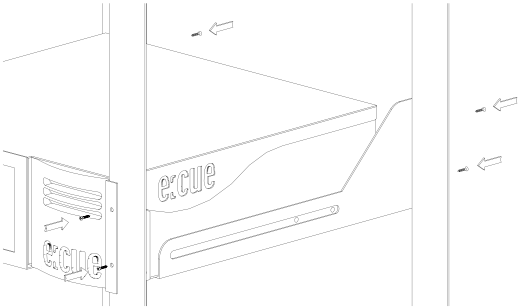

Ensure that the server rack is sufficiently ventilated.

Installation location

In case of desktop operation, place a non-slip pad beneath the server. This prevents damage to the server and the installation location.

- Do not obstruct the ventilation slots.
- There must be at least 10 cm distance to other devices or objects.
- Do not stack several devices on top of each other, otherwise this could lead to overheating.
- Install the server in a location where the device is protected against dust, heat, moisture and vibration.
- Only install the device in a vertical position. All other operating modes are prohibited.

ME2 connections

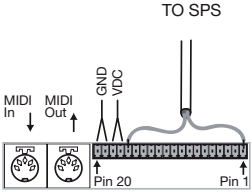

SPS (isolated opto-inputs)

1-16: In (5..25 VDC) Inputs 0-15
17: +12 VDC out (max. 100mA)
18: +12 VDC out (max. 100mA)
19: GND
20: GND

Example for SPS connections

The +12 VDC connectors can be used to connect pushbuttons. For this connect +12 VDC to one of the sixteen inputs with the pushbutton inbetween.

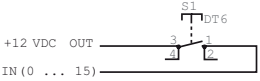

Attention!
When using internal +12 VDC output, pay attention to the max. current rating (100mA).

MIDI

IN	OUT
1: nc	1: nc
2: nc	2: Shield
3: nc	3: nc
4: IN+	4: +5v
5: IN -	5: IN

DMX

1: GND
2: DMX -
3: DMX +
4: nc
5: nc

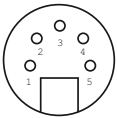

RS 232 - 9 pin male

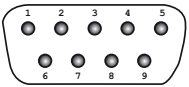

1: nc	5: GND	9: nc
2: RxD	6: nc	
3: TxD	7: nc	
4: nc	8: nc	

MIDI/dry contact input configuration

Setup Hardware

Pins are from top to bottom: In0, In2, ..., In15, +12V, +12V, GND, GND

Connect LCE +12V with one of the Input pins (pin In0 to In15, usually through a push-button) for example (LCE) +12V --> push-button --> In1

These inputs are for dry contacts only, do no apply external voltage on the inputs, this can damage the input module!

Setup Software:

- In Programmer | Device Manager, add “Me2 Midi Interface” (category “Midi Device”; can be found via “Automatic Setup Wizard”)
- Also add “Me2 Input Module” (category “Terminals and Miscellaneous”; will NOT be found via “Automatic Setup Wizard”)
- Select “Me2 Input Module” in Device Manager to see the current Input status

Initial start up

Connect your devices to the server and connect with the line power supply. Once the line power supply is connected, the LCE switches on automatically. The front LED indicators light up in green. Red blinking of the LEDs indicates hard drive activity. You can now see on the touch-screen that the server has started.

For normal switching on of power, press the On switch on the left side of the LCE. Only switch off power to the LCE by shutting down the operating system. Disconnecting the operating voltage can lead a loss of data. If the operating system does not respond, press the Off switch on the LCE and keep pressed until the LCE switches itself off.

Change the Windows administrator password within six weeks after first startup. Otherwise the password will expire and cannot be reset anymore!

System Configuration

All steps shown here relate to the English version of Microsoft® Windows 7™. If you have a different language version, it is possible that expressions change. The default language of the operating system is English.

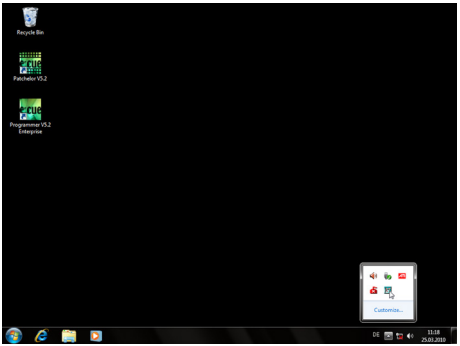

Open the menu in task bar and right-click on the “Touchmon” icon.

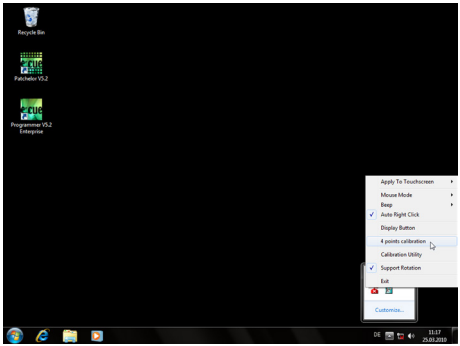

Click on “4 points calibration”; a window opens for calibrating the touch-screen. Follow the instructions on the screen.

Setting the network address

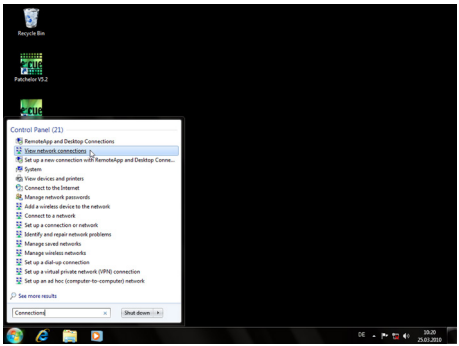

To change the network address of one of the installed network cards, click on the “Start” icon and enter “Connections” in the search box.

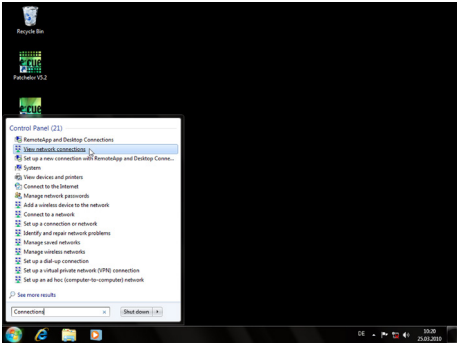

Select “View network connections” in the hit list.

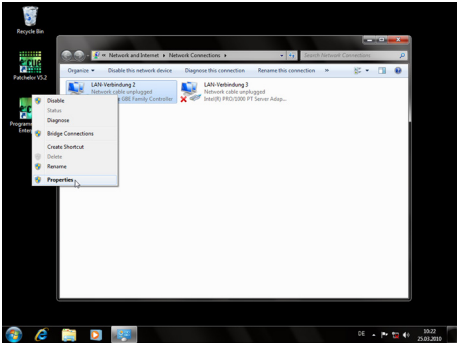

You now see all available connections. Right-click on the desired connection and select “Properties”.

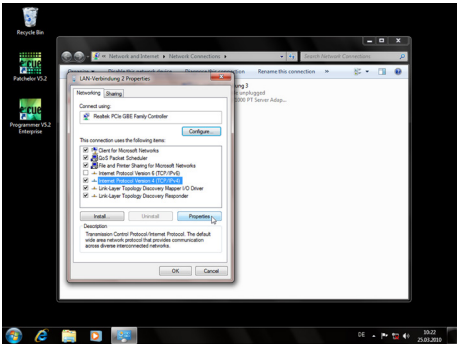

In this open window click on “Internet Protocol Version 4 (TCP/IPv4)”, then press the “Properties” button.

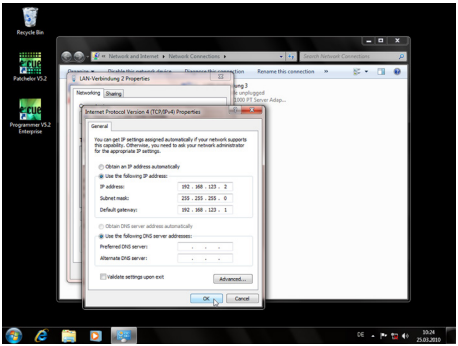

Enter the appropriate address for the network. Confirm your input by clicking on the “OK” button. You can close all windows now. The network connection is now configured.

Adjust the Programmer's network settings

Start "Programmer V5.3 Enterprise".

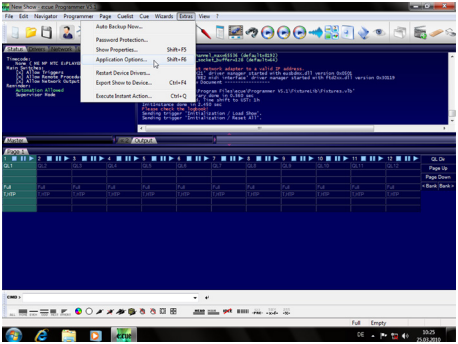

Click on "Extras" and select "Application Options".

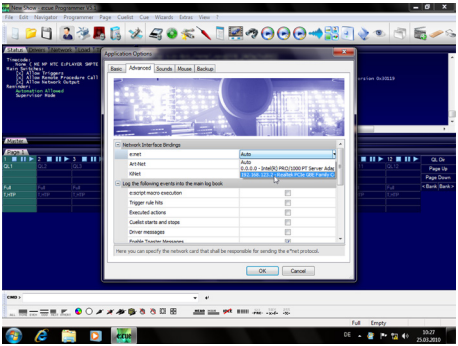

In the menu, under the "Advanced" tab, you can specify which network card the programmer software e:net should output to. You can also specify this setting for the "ArtNet" and "KiNet" protocols. e:cue recommends only outputting one

protocol per network card.

Performing maintenance

Lighting Control Engine - System Configuration

This section contains instructions for maintaining the server hardware. Consult with e:cue before performing any of this work. Work on the server may only be performed by trained personnel and in compliance with the ESD guidelines. Non-compliance can cause damage to the system.

Open the server housing

To open the housing, remove the LCE from the 19” rack if necessary. Unfasten the six screws. The red cover can now be taken off as shown.

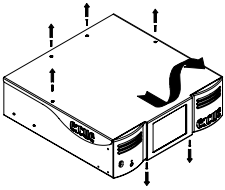

Replacing hard drives

Each hard drive can be removed by unfastening three screws. Only use hard drives for replacement that have been approved by e:cue.

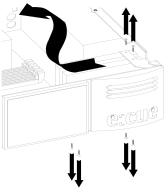

Battery replacement

The server’s CMOS battery can be replaced if it is exhausted. Only use the same type of batteries that e:cue has approved for use.

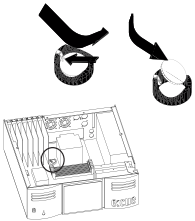

Technical data

General data	
Item number LCE	EN.LC.9000000
Item number LCEfx	EN.LC 9100000
Dimensions	504.5 x 487 x 132.4 mm/19.86 x 19.7 x 5.21 inch
Weight	12 kg/26.45 lbs
Power	100 ... 240V AC, 600W
Operating/storage temperature	0 ... 35° C/32 ... 95° F
Operating / storage humidity	0 ... 80%, non-condensing
Protection class	IP20
Housing	Steel, aluminum
Mounting	Desktop, 19” mounting
Certifications	CE
Engine	
User interface	Keyboard / mouse / touch-screen
Operating system	Microsoft® Windows 7™ Ultimate
System connection ports	2 x e:net (RJ45 Ethernet)
Data storage LCE	2 x 250 GB SATA2 HDD (RAID1)
Data storage LCEfx	2 x 500 GB SATA2 HDD (RAID1)
Outputs LCE	2 x DMX512 (XLR5-Pin) 2 x RS-232 (D-Sub9) 1 x MIDI 1 x DVI 1 x Audio
Outputs LCEfx	2 x DMX512 (XLR5-Pin) 4 x RS-232 (D-Sub9) 1 x MIDI 2 x DVI 1 x Audio (RCA)

Inputs LCE	1 x Audio 1 x Video 1x DMX512 (XLR5-Pin) 2 x RS232 (D-Sub9) 1 x MIDI 16 x digital dry contact inputs
Inputs LCEfx	1 x Audio 1 x Video 1 x DMX512 (XLR5-Pin) 4 x RS232 (D-Sub9) 1 x MIDI 16 x digital dry contact inputs
Display	
Display format	XGA (1024x768)

Dimensions

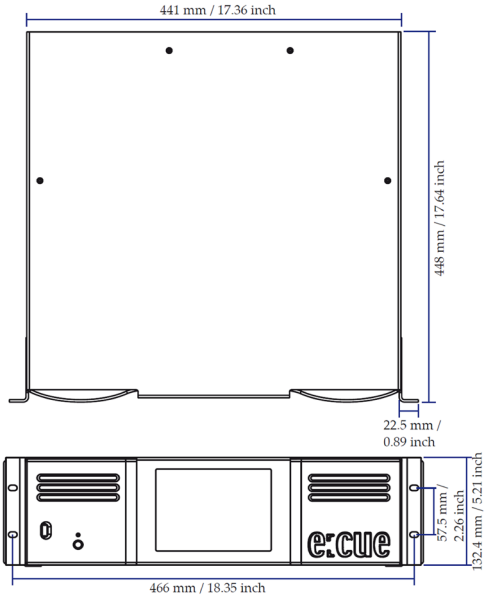
441 mm / 17.36 inch
448 mm / 17.64 inch
22.5 mm /
0.89 inch
57.5 mm /
2.26 inch
132.4 mm / 5.21 inch
466 mm / 18.35 inch

Appendix

LCE connections

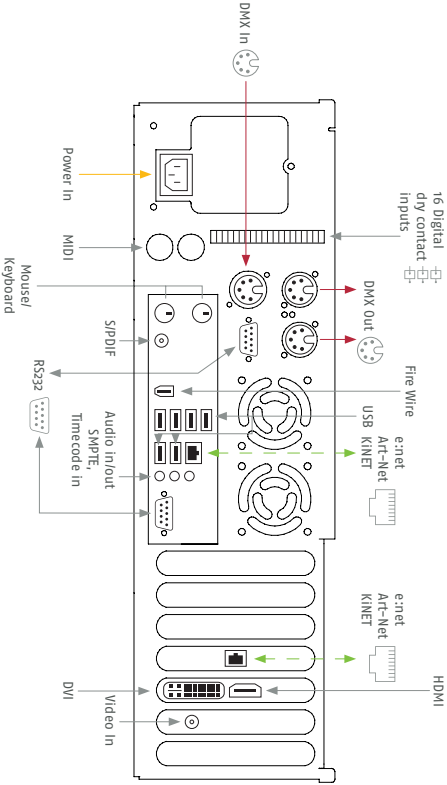

LCEfx connections

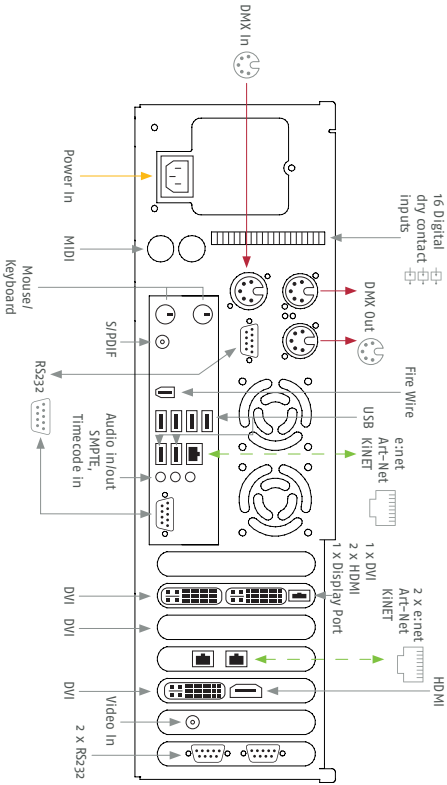

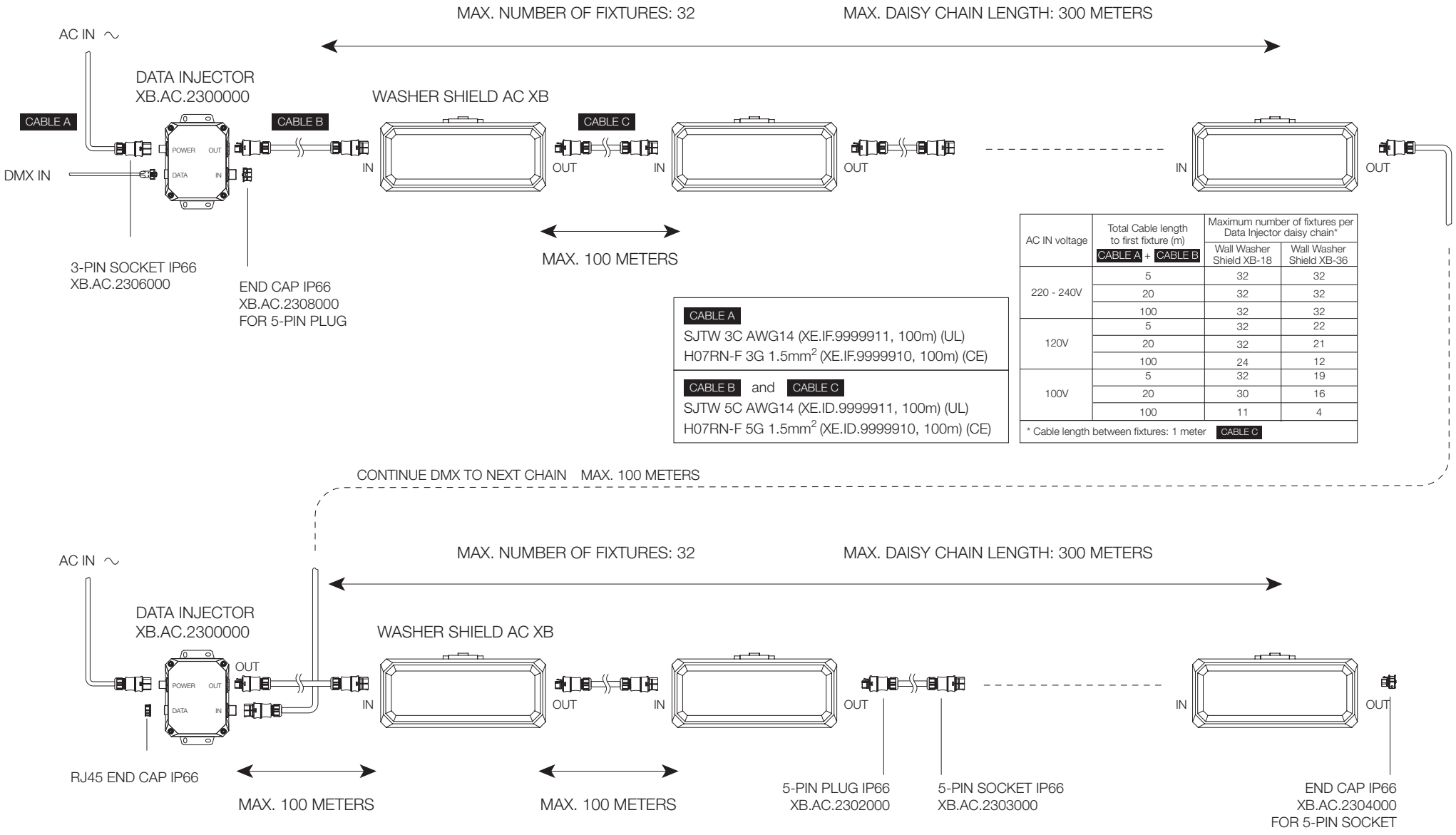

CABLE A

SJTW 3C AWG14 (XE.IF.9999911, 100m) (UL)
H07RN-F 3G 1.5mm^2 (XE.IF.9999910, 100m) (CE)

CABLE B and **CABLE C**

SJTW 5C AWG14 (XE.ID.9999911, 100m) (UL)
H07RN-F 5G 1.5mm^2 (XE.ID.9999910, 100m) (CE)

AC IN voltage	Total Cable length to first fixture (m) CABLE A + CABLE B	Maximum number of fixtures per Data Injector daisy chain*	
		Wall Washer Shield XB-18	Wall Washer Shield XB-36
220 - 240V	5	32	32
	20	32	32
	100	32	32
120V	5	32	22
	20	32	21
	100	24	12
100V	5	32	19
	20	30	16
	100	11	4

* Cable length between fixtures: 1 meter CABLE C

traxon

Please check for the latest updates and changes on the TRAXON website.
© TRAXON TECHNOLOGIES, 2011. ALL RIGHTS RESERVED.
WWW.TRAXONTECHNOLOGIES.COM

TITLE : SYSTEM WIRING DIAGRAM

PRODUCTS : WALL WASHER SHIELD AC XB

DATE : 17/03/2011

DWG. BY : BL

SCALE : NOT TO SCALE

PAGE : 1 OF 1

VER : 1.0

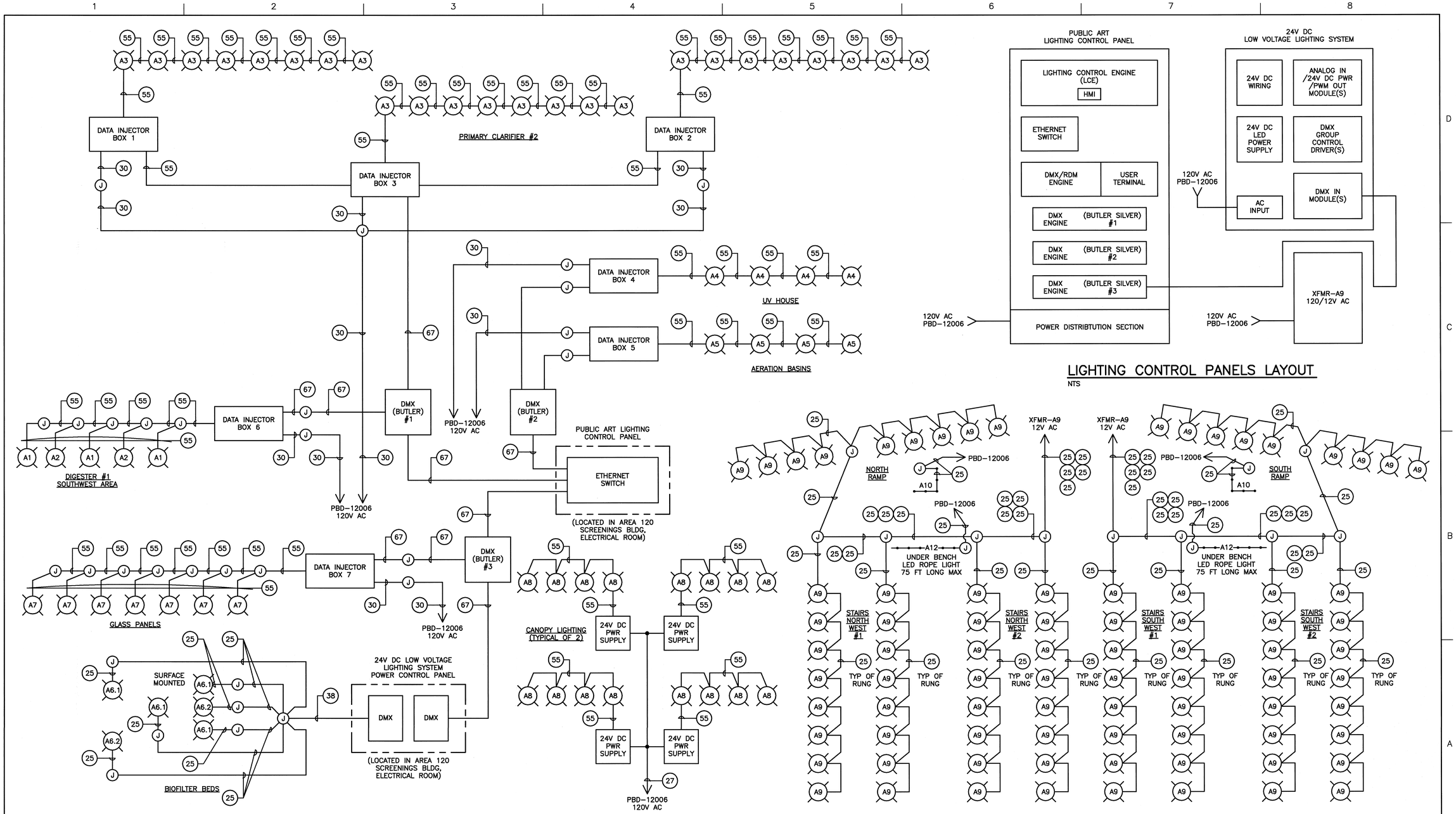

SITE LIGHTING BLOCK DIAGRAM

NTS

LIGHTING CONTROL PANELS LAYOUT

NTS

UNDERGROUND SERVICE ALERT
ONE-CALL NUMBER
1-800-424-5555
CALL TWO BUSINESS DAYS BEFORE YOU DIG

HDR
HDR Engineering, Inc.

ISSUE	DATE	DESCRIPTION
A	JULY 2011	ISSUE FOR BID SUBMITTAL

PROJECT MANAGER	A. MEILLEUR
DESIGNED	I. RINCON
DRAWN	P. McCLINTOCK
CHECKED	E. SWANSON
PROJECT NUMBER	142105

ISABEL C RINCON — STATE OF WASHINGTON — 44197 — REGISTERED PROFESSIONAL ENGINEER
06-08-11

City of Wenatchee
WASTE WATER TREATMENT PLANT IMPROVEMENTS

ELECTRICAL
SITE LIGHTING BLOCK DIAGRAM

0 1" 2"

FILENAME	000E-12.dwg
SCALE	NONE

SHEET 000E-12

Specification Section 16441

Panelboards

PANELBOARD NO:	PBD-12006	PUBLIC ART SHOW PANELBOARD		DATE	5/25/2011
VOLTAGE:	208Y/120	BUS RATING (A):	225	ENCLOSURE:	NEMA 1
PHASE:	3	MAIN OC DEVICE (A/PHASE):	225	MOUNTING:	IN MCC-12006
WIRE:	4+GND	INTERRUPTING RATING (KA):	22	LOCATION:	SCREENINGS BLDG,
200% NEUTRAL:	NO	SERVICE ENTRANCE LABEL:	NO		ELECTRICAL RM

CKT NO.	DESCRIPTION	CONNECTED LOAD (VA) LTS	REC	MECH	MISC	OCP AMPS	P		OCP AMPS	P	CONNECTED LOAD (VA) LTS	REC	MECH	MISC	DESCRIPTION	CKT NO.
1	LIGHTING CONTROL PANEL					20	1	A								2
3	SPARE					20	1	B	20	3					SPARE	4
5	SPARE					20	2	C								6
7								A	20	1					SPARE	8
9	D.I. #6 DIGESTER TYPE A1&A2	320				15	1	B	15	1				1,000	TO XFMR-A9 (FOR TYPE A9)	10
11	D.I. #1 PRIM. CLARIF. #2 TYPE A3	560				15	1	C	15	1				500	SOUND EFFECTS CONTROL PANEL	12
13	D.I. #2 PRIM. CLARIF. #2 TYPE A3	240				15	1	A	15	1	33				TOP MAIN VIEW PLAT. STAIRS TYPE A10	14
15	D.I. #3 PRIM. CLARIF. #2 TYPE A3	240				15	1	B	15	1	~~107~~				~~NW BENCH TYPE A12 DRIVER~~	~~16~~ (1)
17	D.I. #4 UV HOUSE TYPE A4	236				15	1	C	15	1	189				LANDSCAPE LIGHTS N. TYPE A13	18
19	D.I. #5 AERATION BASINS TYPE A5	236				15	1	A	15	1	189				LANDSCAPE LIGHTS S. TYPE A13	20
21	LV SYSTEM 24VDC TYPE A6	100				15	1	B	15	1	~~107~~				~~SW BENCH TYPE A12 DRIVER~~	~~22~~ (1)
23	D.I. #7 CH. GLASS PNLS. TYPE A7	942				15	1	C	20	1			500		WATER FEATURE PUMP #1	24
25	MAIN VIEW PLATF. CAN. TYPE A8	402				15	1	A	20	1			500		WATER FEATURE PUMP #2	26
27	ADMIN. CANOPY TYPE A8	402				15	1	B	20	1			500		WATER FEATURE PUMP #3	28
29	SPARE					15	1	C	15	1					SPARE	30
31	SPARE					15	1	A	15	1					SPARE	32
33	SPARE					15	1	B	15	1					SPARE	34
35	SPARE					20	2	C	20	2					SPARE	36
37								A								38
39	SPARE					20	2	B	20	2					SPARE	40
41								C								42

LOAD SUMMARY

	LTS	REC	MECH	MISC	SPARE	TOTAL				PHASE BALANCE	
CONNECTED LOAD (KVA)	4.3	0.0	1.5	1.5	---	7.3		480	LINE-TO-LINE VOLTS	PHASE A (KVA)	2
DEMAND FACTOR	1.25	NEC	1.00	1.00	20%	---		9	CONNECTED AMPS	PHASE B (KVA)	3
DESIGN LOAD (KVA)	5.4	0.0	1.5	1.5	1.5	9.8		12	DESIGN AMPS	PHASE C (KVA)	3

(1) TYPE A12 ELIMINATED, CIRCUITS ARE NOW SPARE.

CIRCUIT DIRECTORY

1	LTS, ELECTRICAL ROOM	2	REC. ELECTRICAL ROOM
3	LTS, INFLUENT SCREENING ROOM	4	LTS, INFLUENT SCREENING ROOM
5	EMERGENCY LTS, INFLUENT SCREENING ROOM	6	REC, INFLUENT SCREENING ROOM
7	CHANNEL, LTS AND REC	8	EXTERIOR LIGHTS
9	MAIN GATE (SWING), GCR-12075A	10	NW GATE #1, GCR-12077
11	MAIN GATE (SWING), GCR-12075A	12	NW GATE #1, GCR-12077
13	MAIN GATE (SWING), GCR-12075A	14	NW GATE #1, GCR-12077
15	SPARE	16	SPARE
17		18	
19	SCRP (CONTROL PANEL) SCRP-12000	20	SPARE
21	SAMPLER, SAMP-12001	22	SPARE
23	MAIN ENTRANCE PEDESTRIAN GATE	24	
25	SOUTH ENTRANCE PEDESTRIAN GATE	26	SPARE
27	HEAT PUMP, HP-12001, FCU-12001	28	SPARE
29	HEAT PUMP, HP-12001, FCU-12001	30	SPARE
31	HOT BOX	32	NW #2 GATE CONTROLLER
33	SPARE	34	
35	SPARE	36	
37	HEATER / FCU	38	
39	HEATER / FCU	40	
41		42	

Panel: PBD-12006E	**Fed From:**	**Voltage: 120/208**	**Phase: 3 Phase 4 Wire**

Prepared by: Magnum Electric Service, Inc. (509) 783-7411

ROCB 42 SCHEDULE

Panel Address

Panel Name: PBD-12006

Panel Capacity 42
Installed Breakers 42

Voltage: 120/208
Locatior Screenings Building

TYPE	CKT#	SW NO	Load Description		Load Description	CKT#	TYPE	SW NO
TEY-RC	1					2	TEY-RC	
TEY-RC	3					4	TEY-RC	
TEY-RC	5					6	TEY-RC	
TEY-RC	7					8	TEY-RC	
TEY-RC	9					10	TEY-RC	
TEY-RC	11					12	TEY-RC	
TEY-RC	13					14	TEY-RC	
TEY-RC	15					16	TEY-RC	
TEY-RC	17					18	TEY-RC	
TEY-RC	19					20	TEY-RC	
TEY-RC	21					22	TEY-RC	
TEY-RC	23					24	TEY-RC	
TEY-RC	25					26	TEY-RC	
TEY-RC	27					28	TEY-RC	
TEY-RC	29					30	TEY-RC	
TEY-RC	31					32	TEY-RC	
TEY-RC	33					34	TEY-RC	
TEY-RC	35					36	TEY-RC	
TEY-RC	37					38	TEY-RC	
TEY-RC	39					40	TEY-RC	
TEY-RC	41					42	TEY-RC	

Group No:	Breakers associated	Automation Scenario	Switch #
1	Breaker #9, #6 Digester-Type A1 & A2	Note1 Traxon Controlled- Manual	
2	Breaker #11, Clarifier #2- Type A3	Note1 Traxon Controlled- Manual	
3	Breaker #13, Clarifier #2- Type A3	Note1 Traxon Controlled- Manual	
4	Breaker #15, Clarifier #2- Type A3	Note1 Traxon Controlled- Manual	
5	Breaker #17, UV House- Type A4	Note1 Traxon Controlled- Manual	
6	Breaker #19, Aeration Beds- Type A5	Note1 Traxon Controlled- Manual	
7	Breaker #21 Biofilter- Type A6.1 & 6.2	Note1 Traxon Controlled- Manual	
8	Breaker #23, Glass Pnls.- Type A7	Note1 Traxon Controlled- Manual	
9	Breaker #25, View Pltfrm.- Type A8	Dusk to Dawn	
10	Breaker #27, Admin. Canopy- Type A8	Dusk to Dawn	
11	Breaker #10, Type- A9	Dusk to Dawn	
12	Breaker #12, Sound Panel	Dusk to 2:00 a.m.	
13	Breaker #14, View Pltfrm.- Type A10	Dusk to Dawn	
14	Breaker #18, Landscape- Type A13	Dusk to Dawn	
15	Breaker #20, Landscape- Type A13	Dusk to Dawn	
16	Breaker #'s 22-24, Water Feature Pump	Dusk to Dawn	

Note:
Automation scenario - time schedule - can be different for each day of the week.
Breaker Type: TEY-RC - remote controlled; TEY - Standard

Note 1:
Breakers to by manually operated on/off only. Programming is by Traxon's system.

Note sure of what is required for the TEY-RC schedule. Advise if what is given isn't enough information.

GE Technical Support
Suite 110-6651 Fraserwood Place
Richmond, BC V6W 1J3
Toll Free 1-877-584-2685
Fax (604)232-4021

Time clock settings:

Since it's an astronomical clock set for dusk to dawn operation, the only settings necessary were the current date and time. This was done by a city employee.

POST ON JOBSITE PRIOR TO BEGINNING OF WORK

Department of Labor and Industries

ELECTRICAL CONTRACTOR
ELECTRICAL WORK PERMIT #2071037E

Contractor Name
MAGNUM ELECTRIC SERVICE INC

License Number
MAGNUES188LH

Installation Description:
Misc modifications to the wastewater treatment facility

Purchaser's mailing address
1537 FOWLER ST
RICHLAND WA 99352
Telephone number
5097837411

Services to inspect:

Description	Quantity	Amount
New Service or Largest Feeder - 201 - 400 AMP	1	$218.90
New Service or Largest Feeder - 401 - 600 AMP	2	$510.40
Additional Service or Feeder - 1 - 100 AMP	8	$456.80

Inspection Fee: $1,186.10

The department will perform 1 inspection for permits where total fee paid on permit is less than $86.19. For more than 1 inspection, additional fees are required.

Additional Fees May Be Assessed Upon Field Inspection

Premises owner's name
City of Wenatchee Wastewater Improvements

Address of inspection
201 N. Worthen St
WENATCHEE

Site Phone Number
5095214467

Power company
Chelan County PUD 1

This permit expires in one (1) year from date of last activity.

Applied:2/23/2012 Expiration:2/23/2013

	Date	Approved By		Date	Approved By
WALLS					
Insulation Only			**SERVICE**		
Cover			**FEEDER**		
CEILING					
Insulation Only			**THERMOSTAT**		
Cover			**DITCH**		

Inspection Date	Area, Building or Equipment Inspected	Action Taken	Electrical Inspector
4-5-12	Ditch Cover at road	ok	D.W.
4-18-12	Cover PVC Duct bank	ok	D.W.
5-17-12	South Ramp	OK	LW
5-29-12	U-FER South Stairway South of ADMIN Duct Bank	AC	T.A.
6-5-12	2"&1/c. Blower BLDG/2"&1/c. UV BLDG	OK	LW

Property Owner: This is your permanent record of inspection

Dept. of Labor & Industries
Electrical Inspection Section

PROGRESSIVE INSPECTION REPORT

DO NOT CONCEAL OR DESTROY!

Job name: CITY OF WENATCHEE
Permit No.: 2071037E
Owner:
Electrical Contractor: MAGNUM ELEC
Location: 201 N. WORTHEN
City:
Electrical Inspector:
Office location:
Phone:

Inspection Date	Area, Building or Equipment Inspected	Action Taken	Electrical Inspector
6-18	Slab cover for building	ok	D.L.
6-18	Disapprove low voltage		
6-21-12	U.G. CONDUIT FOR LV @ STAIRWAY	OK	MM
6-27-12	SCREENING BLDG. SLAB COMPLETE	OK	MM
"	ADMIN. CANOPY LTG. UG CONDUIT	OK	MM
7-2	PVC in ditch west of Clarifier 2	ok	DL
7-25	Deep underground at North viewing platform PVC Runs	ok	D.L.
7-31-12	2" & 1" C. TO NON-POT PUMPS; 3x3/4" C. Southend	AP	MM
8-15-12	Cover PVC in Stairs N. viewing Platform	ok	DL
8-22-12	PVC Cover for LED lights in No. view platform	ok	D.L.
9-19-12	Cover emt conduit in MCC Rm. west wall	ok	D.L.
9/26/12	UG DuctBank Bio Filter/UG. WEST OF MCC's 225 & 150 Sections SCREEN BLD	OK	TSL
10/24/12	North Platform Ramp Lights & Pipe	OK	TSL
11-8-12	CLARIFIER CONTROL CONDUIT	OK	MM
"	DUCT BANK WEST OF CLARIFIER 1	OK	MM

F500-075-000 progressive inspection report

Dept. of Labor & Industries
Electrical Inspection Section

PROGRESSIVE INSPECTION REPORT

DO NOT CONCEAL OR DESTROY!

Job name: CITY OF WENATCHEE
Permit No.: 2071037E
Owner:
Electrical Contractor: MAGNUM ELEC
Location: 201 N. WORTHEN
City:
Electrical Inspector:
Office location:
Phone:

Inspection Date	Area, Building or Equipment Inspected	Action Taken	Electrical Inspector
12-6-12	Conduit Cover along S. and Worthen St. for lighting & gate operator	ok	D.W.
"	Influent or new screening room Partial Final		D.W.
"	Solids building upstairs conduit runs to foul air fans & AHU	ok	D.W.
12-19-12	Cover PVC Conduit in Bio-filter	ok	D.W.
"	Two Fans in "new fan room"	ok	D.W.
3-6-13	Cover PVC Conduit for tree lights	ok	D.W.

F500-075-000 progressive inspection report

Page ___ of ___

Dept. of Labor & Industries
Electrical Inspection Section

PROGRESSIVE INSPECTION REPORT

DO NOT CONCEAL OR DESTROY!

Job name: CITY OF WENATCHEE	Permit No. 2071037E
Owner:	Electrical Contractor: MAGNUM ELEC
Location: 201 N. WORTHEN	City:
Electrical Inspector:	Office location:

Phone:

Inspection Date	Area, Building or Equipment Inspected	Action Taken	Electrical Inspector

F500-075-000 progressive inspection report

Page ____ of ____