Please address all correspondence regarding this operation and maintenance manual to:

Summer Neal, Documentation Specialist
c/o Waste-Tech, A Division of Kusters Zima Corp.

Physical Address: 101 Zima Park Drive
Spartanburg, S.C. 29304

Mailing Address: P.O. Box 6128
Spartanburg, S.C. 29304

Tel: (864) 594-5604

Email: summer.neal@kusterszima.com

DATE: **February 19, 2014**

REF.: **WT56722**

CONTRACTOR: **Apollo Inc.**

ENGINEER: **HDR Engineering**

PROJECT: **Wenatchee WWTP Improvements – Project PO913**

SECTION: **SECTION 11092 – Perforated Plate Screens**
SECTION 11095 – Screenings Washer Compactor

SUBJECT: **RESUBMITTAL of Operation, Maintenance, & Instruction Manual**

Dear Sir/Madam:

Concerning the above project and receipt of your review comments dated January 27, 2014, we are pleased to provide the following response.

Waste Tech's responses have been incorporated into the list of comments sent by the engineers. Our comments are in *blue italics*.

We trust the above and the revised sections of the submittal confirm the engineer's review comments. If there are any questions, please do not hesitate to call me (864) 594-5604.

Sincerely,

Summer L. Neal
Documentation Specialist
Waste-Tech – A Division of Kusters Zima Corporation

Comments:

1. Apollo shall take “Owner’s Acceptance Certificate” to City.

   This comment does not apply to Waste-Tech

2. List Recommended spare parts in C sheets.

   Recommended spare parts have been added to the C sheets.

OPERATION & MAINTENANCE

WENATCHEE WWTP IMPROVEMENTS
PROJECT PO913
WENATCHEE, WA

SECTION 11092 – PERFORATED PLATE SCREENS
SECTION 11095 – SCREENINGS WASHER COMPACTOR

CONTRACTOR
Apollo Inc.
P.O. Box 7305
Kennewick, WA 99336
Ph: (509) 586-1104
Fax: (509) 585-3686

EQUIPMENT MANUFACTURER
Waste-Tech A Division of Küsters-Zima
Physical Address: 101 Zima Park Drive
Spartanburg, SC 29301
Mailing Address: PO Box 6128
Spartanburg, SC 29304
Tel: (864) 576-0660
Fax: (864) 587-5761

REPRESENTATIVE
Victor Pedroni
Pedroni & Co., LLC
26646 SE 18th Street
Sammamish, WA 98075
Ph: (425) 369-6164

Revision - 5

PROJECT: **WENATCHEE WWTP IMPROVEMENTS**
PROJECT PO913
WENATCHEE, WA

REF.: **WT56722**

SECTION: **SECTION 11092 – PERFORATED PLATE SCREENS**
SECTION 11095 – SCREENINGS WASHER COMPACTOR

EQUIPMENT: **(2) WT/FSM 700x65\6 FILTERSCREENS, (2)WT/ FSM SPW200 WASHER/COMPACTORS with AGITATORS**

INDEX

1. General Information
- 1.1 Scope of Supply
- 1.2 Weight of Equipment
- 1.3 Comprehensive Parts List
- 1.4 Spare Parts
- 1.5 Warranty – Filterscreen & Compactor with Agitator
- 1.6 Painting Specification
- 1.7 Unloading, Storage, Installation Instructions
- 1.8 Maximum Differential Head Calculations (Screen)
- 1.9 Testing Procedures

2. Layout Drawings
- 2.1 General arrangement Drawings

3. Controls
- 3.1 Sequence of Operation
- 3.2 Electrical Schematics
- 3.3 Bill of Material
- 3.4 Control Component Cut Sheets
- 3.5 Ultrasonic LevelSensor
- 3.6 Overload Current Monitor Details

4. FSM Filterscreen

4.1 Technical Data & Materials of Construction
4.2 Gear Reducer & Motor Details
4.3 Anchor Bolt Details
4.4 Screen Washwater Component Details
4.5 Filterscreen O & M Manual
4.6 High Level Float Switch

5. Screenings Washer Compactor

5.1 Technical Data
5.2 Gear Reducer & Motor Details
5.3 Anchor Bolt Details
5.4 Screenings Washer Press Washwater Component Details
5.5 Guard Switch
5.6 Level Sensors
5.7 Pressure Sensor
5.8 SPW200 Operation & Maintenance
5.9 Bagging Unit

6. Maintenance Summary Sheets & Component O & M Manuals

6.1 Maintenance Summary Sheets
6.2 Component O & M Manuals

EXHIBIT C1

Equipment Record

Equipment Data and Spare Parts Summary

Project Name: WENATCHEE WWTP IMPROVEMENTS PROJECT P0913	Specification Section: 11092
Equipment Name: MODEL WT/FRS 700x65/8 FILTERSCREEN	Year Installed: 2012
Project Equipment Tag No(s).: SCN12004B/WT SERIAL No.: 600.90/62	
Equipment Manufacturer: WASTE-TECH, A DIVISION OF KUSTERS ZIMA CORPORATION	Project/ Order No. WT56722
Address: 101 ZIMA PARK DRIVE, SPARTANBURG, SC 29301	Phone: (864) 576-0660
Fax: (864) 587-5761 / Web Site: www.kusterswater.com	E-mail: kzc@kustersizma.com
Local Vendor/Service Center: WASTE-TECH, A DIVISION OF KUSTERS ZIMA CORPORATION	
Address: 101 ZIMA PARK DRIVE, SPARTANBURG, SC 29301	Phone: (864) 576-0660
Fax: (864) 587-5761 / Web Site: www.kusterswater.com	E-mail: kzc@kustersizma.com

MECHANICAL NAMEPLATE DATA

Equip. GEAR REDUCER - SCREEN DRIVE 258.18:1			Serial No. 870245751.12.12.002	
Make SEW EURODRIVE			Model No. SA 87	
ID No.	Frame No. AM 182 ADAPTOR	HP	RPM 6.8	Cap.
Size 193 LBS	TDH	Imp. Sz.	CFM	PSI

Other: AGMA RATING: II; SF: 1.5; MOUNTING: C-FACE

ELECTRICAL NAMEPLATE DATA

Equip. MOTOR - SCREEN DRIVE					Serial No. DX3124315007			
Make TECO WESTINGHOUSE					Model No. EP0034C			
ID No.	Frame No. 182 TC	HP 3	V. 230-460 V	Amp. 3.89 A @ 460V	HZ 60	PH 3	RPM 1800	SF 1.15
Duty	Code B	Ins. Cl. F	Type TEFC	NEMA YES	C Amb.	Temp. Rise B	Rating	

Other: PREMIUM EFFICIENCY; CLASS 1, DIV 1; WINDING: B; WEIGHT: 100 LBS

SPARE PARTS PROVIDED PER CONTRACT

Part No.	Part Name	Quantity
	ROTATING BRUSH	1
	SET OF SIDE SEALS & CURVED SEALS	1
	BOTTOM BRUSH	1

RECOMMENDED SPARE PARTS

Part No.	Part Name	Quantity
	TOP SPROCKET TENSION FRAME BEARING & TOP SPROCKET (SPLIT TYPE)	2
	CHAIN	1
	MASTERLINK CONNECTION PIECES	4
	BRUSH SHAFT BEARING	2
	ROTATING BRUSH	1 SET
	BOTTOM SEAL SET (BRUSH, PLATE, RUBBER)	1
	BOTTOM SPROCKET	1
	GEAR REDUCER (ONE EACH FOR THE SCREEN, BRUSH, & ROLLER DRIVES)	3
	MOTOR (ONE EACH FOR THE SCREEN, BRUSH, & ROLLER DRIVES)	3

(Jun 1990; Revised Oct 2001, Revised Nov 2007)
Copyright 1991 HDR Engineering, Inc.

EXHIBIT C2

Equipment Record

Recommended Maintenance Summary

Equipment Description	Project Equip. Tag No(s).
MODEL WT/FRS 700x65/8 FILTERSCREEN	SCN12004B/WT SERIAL NO.: 600.90/62

RECOMMENDED BREAK-IN MAINTENANCE (FIRST OIL CHANGES, ETC.)	INITIAL COMPLETION * FOLLOWING START-UP						
	D	W	M	Q	S	A	Hours
Change oil after initial run in period (about 1 month)			X				

RECOMMENDED PREVENTIVE MAINTENANCE	PM TASK INTERVAL *						
	D	W	M	Q	S	A	Hours
Check oil level in gearboxes				X			
Change oil in gearboxes						X	10,000
Check motor bearings						X	12,000
Grease upper bearings				X			
Grease lower bearings		X					
Lubricate drive box links			X				
Check drive units for oil leaks	X						
Check equipment for universal noises	X						
Check for leaks around the housing		X					
Check that the screen chain is running smoothly		X					
Check for any visible damage	X						
Spray chains with chain lube			X				
Check water supply/check for correct water pressure (15gpm)	X						
Visual check compactor hopper for blockage	X						

* D = Daily W = Weekly M = Monthly Q = Quarterly S = Semiannual A = Annual Hours = Run Time Interval

(Jun 1990; Revised Oct 2001, Revised Nov 2007)

Copyright 1991 HDR Engineering, Inc.

EXHIBIT C3

Equipment Record

Lubrication Summary

Equipment Description	Project Equip. Tag No(s).
MODEL WT/FRS 700x65/8 FILTERSCREEN	SCN12004B/ WT SERIAL No.: 600.90/62

Lubricant Point GEARBOXES

Lubricant Type		Manufacturer	Product	AGMA #	SAE #	ISO
	1	MOBIL	MOBILGEAR 636	8	90	VG 680
	2					
	3					
	4					
	5					

Lubricant Point DRIVE BOX LINKS

Lubricant Type		Manufacturer	Product	AGMA #	SAE #	ISO
	1	ANY	MOLYBDENUM CHAIN LUBE	8	140	VG 680
	2					
	3					
	4					
	5					

Lubricant Point SCREEN LOWER BEARING

Lubricant Type		Manufacturer	Product	AGMA #	SAE #	ISO
	1	SHELL	RETINAX LX	8	140	VG 220
	2					
	3					
	4					
	5					

Lubricant Point UPPER BEARINGS

Lubricant Type		Manufacturer	Product	AGMA #	SAE #	ISO
	1	SHELL	RETINAX LX	8	140	VG 220
	2					
	3					
	4					
	5					

Lubricant Point

Lubricant Type		Manufacturer	Product	AGMA #	SAE #	ISO
	1					
	2					
	3					
	4					
	5					

Lubricant Point

Lubricant Type		Manufacturer	Product	AGMA #	SAE #	ISO
	1					
	2					
	3					
	4					
	5					

(Feb 1991; Revised Oct 2001, Revised Nov 2007)
Copyright 1991 HDR Engineering, Inc.

EXHIBIT C1

Equipment Record

Equipment Data and Spare Parts Summary

Project Name: WENATCHEE WWTP IMPROVEMENTS PROJECT P0913	Specification Section: 11092
Equipment Name: MODEL WT/FRS 700x65/8 FILTERSCREEN`	Year Installed: 2012
Project Equipment Tag No(s). SCN12004A/WT SERIAL No.: 600.90/62	
Equipment Manufacturer: WASTE-TECH, A DIVISION OF KUSTERS ZIMA CORPORATION	Project/ Order No. WT56722
Address: 101 ZIMA PARK DRIVE, SPARTANBURG, SC 29301	Phone: (864) 576-0660
Fax: (864) 587-5761 / Web Site: www.kusterswater.com	E-mail: kzc@kusterszima.com
Local Vendor/Service Center: WASTE-TECH, A DIVISION OF KUSTERS ZIMA CORPORATION	
Address: 101 ZIMA PARK DRIVE, SPARTANBURG, SC 29301	Phone: (864) 576-0660
Fax: (864) 587-5761 / Web Site: www.kusterswater.com	E-mail: kzc@kusterszima.com

MECHANICAL NAMEPLATE DATA

Equip. GEAR REDUCER - BRUSH DRIVE 12.96:1			Serial No. 870245755.12.12.001	
Make SEW EURODRIVE			Model No. SA 67	
ID No.	Frame No. AM145 ADAPTOR	HP	RPM 129	Cap.
Size 117 LBS	TDH	Imp. Sz.	CFM	PSI

Other: AGMA RATING: II

ELECTRICAL NAMEPLATE DATA

Equip. MOTOR - BRUSH DRIVE					Serial No. EX2125324017			
Make TECO WESTINGHOUSE					Model No. EP0024C			
ID No.	Frame No. 145 TC	HP 2	V. 230-460 V	Amp. 2.78A @ 460V	HZ 60	PH 3	RPM 1800	SF 1.15
Duty	Code C	Ins. Cl. F	Type TEFC	NEMA YES	C Amb.	Temp. Rise	Rating	

Other: PREMIUM EFFICIENCY; CLASS 1, DIV 1; WEIGHT: 65 LBS

SPARE PARTS PROVIDED PER CONTRACT

Part No.	Part Name	Quantity
	ROTATING BRUSH	1
	SET OF SIDE SEALS & CURVED SEALS	1
	BOTTOM BRUSH	1

RECOMMENDED SPARE PARTS

Part No.	Part Name	Quantity
	TOP SPROCKET TENSION FRAME BEARING & TOP SPROCKET (SPLIT STYLE)	2
	CHAIN	1
	MASTERLINK CONNECTION PIECES	4
	BRUSH SHAFT BEARING	2
	ROTATING BRUSH	1 SET
	BOTTOM SEAL SET (BRUSH, PLATE, RUBBER)	1
	BOTTOM SPROCKET	1
	GEAR REDUCER (ONE EACH FOR THE SCREEN, BRUSH, AND ROLLER DRIVES)	3
	MOTOR (ONE EACH FOR THE SCREEN, BRUSH, AND ROLLER DRIVES)	3

(Jun 1990; Revised Oct 2001, Revised Nov 2007)

Copyright 1991 HDR Engineering, Inc.

EXHIBIT C2

Equipment Record

Recommended Maintenance Summary

Equipment Description	Project Equip. Tag No(s).
MODEL WT/FRS 700x65/8 FILTERSCREEN	SCN12004A/WT SERIAL NO.: 600.90/62

RECOMMENDED BREAK-IN MAINTENANCE (FIRST OIL CHANGES, ETC.)	INITIAL COMPLETION * FOLLOWING START-UP						
	D	W	M	Q	S	A	Hours
Change oil after initial run in period (about 1 month)			X				

RECOMMENDED PREVENTIVE MAINTENANCE	PM TASK INTERVAL *						
	D	W	M	Q	S	A	Hours
Check oil level in gearboxes				X			
Change oil in gearboxes						X	10,000
Check motor bearings						X	12,000
Grease upper bearings				X			
Grease lower bearings		X					
Lubricate drive box links			X				
Check drive units for oil leaks	X						
Check equipment for universal noises	X						
Check for leaks around the housing		X					
Check that the screen chain is running smoothly		X					
Check for any visible damage	X						
Spray chains with chain lube			X				
Check water supply/check for correct water pressure (15gpm)	X						
Visual check compactor hopper for blockage	X						

* D = Daily W = Weekly M = Monthly Q = Quarterly S = Semiannual A = Annual Hours = Run Time Interval

(Jun 1990; Revised Oct 2001, Revised Nov 2007)
Copyright 1991 HDR Engineering, Inc.

EXHIBIT C3

Equipment Record

Lubrication Summary

Equipment Description	Project Equip. Tag No(s).
MODEL WT/FRS 700x65/8 FILTERSCREEN	SCN12004A/ WT SERIAL No.: 600.90/62

Lubricant Point GEARBOXES

Lubricant Type		Manufacturer	Product	AGMA #	SAE #	ISO
	1	MOBIL	MOBILGEAR 636	8	90	VG 680
	2					
	3					
	4					
	5					

Lubricant Point DRIVE BOX LINKS

Lubricant Type		Manufacturer	Product	AGMA #	SAE #	ISO
	1	ANY	MOLYBDENUM CHAIN LUBE	8	140	VG 680
	2					
	3					
	4					
	5					

Lubricant Point SCREEN LOWER BEARING

Lubricant Type		Manufacturer	Product	AGMA #	SAE #	ISO
	1	SHELL	RETINAX LX	8	140	VG 220
	2					
	3					
	4					
	5					

Lubricant Point UPPER BEARINGS

Lubricant Type		Manufacturer	Product	AGMA #	SAE #	ISO
	1	SHELL	RETINAX LX	8	140	VG 220
	2					
	3					
	4					
	5					

Lubricant Point

Lubricant Type		Manufacturer	Product	AGMA #	SAE #	ISO
	1					
	2					
	3					
	4					
	5					

Lubricant Point

Lubricant Type		Manufacturer	Product	AGMA #	SAE #	ISO
	1					
	2					
	3					
	4					
	5					

(Feb 1991; Revised Oct 2001, Revised Nov 2007)
Copyright 1991 HDR Engineering, Inc.

EXHIBIT C1

Equipment Record

Equipment Data and Spare Parts Summary

Project Name: WENATCHEE WWTP IMPROVEMENTS PROJECT P0913	Specification Section: 11092
Equipment Name: MODEL WT/FRS 700x65/8 FILTERSCREEN`	Year Installed: 2012
Project Equipment Tag No(s). SCN12004A/WT SERIAL No.: 600.90/62	
Equipment Manufacturer: WASTE-TECH, A DIVISION OF KUSTERS ZIMA CORPORATION	Project/ Order No. WT56722
Address: 101 ZIMA PARK DRIVE, SPARTANBURG, SC 29301	Phone: (864) 576-0660
Fax: (864) 587-5761 / Web Site: www.kusterswater.com	E-mail: kzc@kusterszima.com
Local Vendor/Service Center: WASTE-TECH, A DIVISION OF KUSTERS ZIMA CORPORATION	
Address: 101 ZIMA PARK DRIVE, SPARTANBURG, SC 29301	Phone: (864) 576-0660
Fax: (864) 587-5761 / Web Site: www.kusterswater.com	E-mail: kzc@kusterszima.com

MECHANICAL NAMEPLATE DATA

Equip. GEAR REDUCER - DEFLECTOR DRIVE 110.73:1			Serial No. 8702458758.12.12.002	
Make SEW EURODRIVE			Model No. SA 47	
ID No.	Frame No. AM56 ADAPTOR	HP	RPM 16	Cap.
Size 33 LBS	TDH	Imp. Sz.	CFM	PSI

Other: AGMA RATING: II; SF: 1.6

ELECTRICAL NAMEPLATE DATA

Equip. MOTOR - DEFLECTOR DRIVE					Serial No. F1206041382			
Make BALDOR RELIANCE					Model No. VEM3538			
ID No.	Frame No.	HP 1/2	V. 460v	Amp. 0.78a @ 460v	HZ 60	PH 3	RPM 1735	SF 1.25
Duty	Code B	Ins. Cl. F	Type TEFC	NEMA YES	C Amb.	Temp. Rise B	Rating	

Other: MOUNTING: C-FACE, DIRECT COUPLED; WEIGHT: 31 LBS

SPARE PARTS PROVIDED PER CONTRACT

Part No.	Part Name	Quantity
	ROTATING BRUSH	1
	SET OF SIDE SEALS & CURVED SEALS	1
	BOTTOM BRUSH	1

RECOMMENDED SPARE PARTS

Part No.	Part Name	Quantity
	TOP SPROCKET TENSION FRAME BEARING & TOP SPROCKET (SPLIT TYPE)	2
	CHAIN	1
	MASTERLINK CONNECTION PIECES	4
	BRUSH SHAFT BEARING	2
	ROTATING BRUSH	1 SET
	BOTTOM SEAL SET (BRUSH, SEAL, RUBBER)	1
	BOTTOM SPROCKET	1
	GEAR REDUCER (ONE EACH FOR THE SCEEN, BRUSH, AND ROLLER DRIVES)	3
	MOTOR (ONE EACH FOR THE SCREEN, BRUSH, AND ROLLER DRIVES)	3

(Jun 1990; Revised Oct 2001, Revised Nov 2007)
Copyright 1991 HDR Engineering, Inc.

EXHIBIT C2

Equipment Record

Recommended Maintenance Summary

Equipment Description	Project Equip. Tag No(s).
MODEL WT/FRS 700x65/8 FILTERSCREEN	SCN12004A/WT SERIAL NO.: 600.90/62

RECOMMENDED BREAK-IN MAINTENANCE (FIRST OIL CHANGES, ETC.)	INITIAL COMPLETION * FOLLOWING START-UP						
	D	W	M	Q	S	A	Hours
Change oil after initial run in period (about 1 month)			X				

RECOMMENDED PREVENTIVE MAINTENANCE	PM TASK INTERVAL *						
	D	W	M	Q	S	A	Hours
Check oil level in gearboxes				X			
Change oil in gearboxes						X	10,000
Check motor bearings						X	12,000
Grease upper bearings				X			
Grease lower bearings		X					
Lubricate drive box links			X				
Check drive units for oil leaks	X						
Check equipment for universal noises	X						
Check for leaks around the housing		X					
Check that the screen chain is running smoothly		X					
Check for any visible damage	X						
Spray chains with chain lube			X				
Check water supply/check for correct water pressure (15gpm)	X						
Visual check compactor hopper for blockage	X						

* D = Daily W = Weekly M = Monthly Q = Quarterly S = Semiannual A = Annual Hours = Run Time Interval

(Jun 1990; Revised Oct 2001, Revised Nov 2007)
Copyright 1991 HDR Engineering, Inc.

EXHIBIT C3

Equipment Record

Lubrication Summary

Equipment Description	Project Equip. Tag No(s).
MODEL WT/FRS 700x65/8 FILTERSCREEN	SCN12004A/ WT SERIAL No.: 600.90/62

Lubricant Point GEARBOXES

Lubricant Type		Manufacturer	Product	AGMA #	SAE #	ISO
	1	MOBIL	MOBILGEAR 636	8	90	VG 680
	2					
	3					
	4					
	5					

Lubricant Point DRIVE BOX LINKS

Lubricant Type		Manufacturer	Product	AGMA #	SAE #	ISO
	1	ANY	MOLYBDENUM CHAIN LUBE	8	140	VG 680
	2					
	3					
	4					
	5					

Lubricant Point SCREEN LOWER BEARING

Lubricant Type		Manufacturer	Product	AGMA #	SAE #	ISO
	1	SHELL	RETINAX LX	8	140	VG 220
	2					
	3					
	4					
	5					

Lubricant Point UPPER BEARINGS

Lubricant Type		Manufacturer	Product	AGMA #	SAE #	ISO
	1	SHELL	RETINAX LX	8	140	VG 220
	2					
	3					
	4					
	5					

Lubricant Point

Lubricant Type		Manufacturer	Product	AGMA #	SAE #	ISO
	1					
	2					
	3					
	4					
	5					

Lubricant Point

Lubricant Type		Manufacturer	Product	AGMA #	SAE #	ISO
	1					
	2					
	3					
	4					
	5					

(Feb 1991; Revised Oct 2001, Revised Nov 2007)
Copyright 1991 HDR Engineering, Inc.

EXHIBIT C1

Equipment Record

Equipment Data and Spare Parts Summary

Project Name: WENATCHEE WWTP IMPROVEMENTS PROJECT P0913	Specification Section: 11092
Equipment Name: MODEL WT/FRS 700x65/8 FILTERSCREEN`	Year Installed: 2012
Project Equipment Tag No(s). SCN12004B/WT SERIAL No.: 600.90/63	
Equipment Manufacturer: WASTE-TECH, A DIVISION OF KUSTERS ZIMA CORPORATION	Project/ Order No. WT56722
Address: 101 ZIMA PARK DRIVE, SPARTANBURG, SC 29301	Phone: (864) 576-0660
Fax: (864) 587-5761 / Web Site: www.kusterswater.com	E-mail: kzc@kusterszima.com
Local Vendor/Service Center: WASTE-TECH, A DIVISION OF KUSTERS ZIMA CORPORATION	
Address: 101 ZIMA PARK DRIVE, SPARTANBURG, SC 29301	Phone: (864) 576-0660
Fax: (864) 587-5761 / Web Site: www.kusterswater.com	E-mail: kzc@kusterszima.com

MECHANICAL NAMEPLATE DATA

Equip. GEAR REDUCER - SCREEN DRIVE 258.18:1			Serial No. 870245751.12.12.002	
Make SEW EURODRIVE			Model No. SA 87	
ID No.	Frame No. AM 182 ADAPTOR	HP	RPM 6.8	Cap.
Size 193 LBS	TDH	Imp. Sz.	CFM	PSI

Other: AGMA RATING: II; SF: 1.5; MOUNTING: C-FACE

ELECTRICAL NAMEPLATE DATA

Equip. MOTOR - SCREEN DRIVE					Serial No. DX3124315007			
Make TECO WESTINGHOUSE					Model No. EP0034C			
ID No.	Frame No. 182 TC	HP 3	V. 230-460 V	Amp. 3.89 A @ 460V	HZ 60	PH 3	RPM 1800	SF 1.15
Duty	Code B	Ins. Cl. F	Type TEFC	NEMA YES	C Amb.	Temp. Rise B	Rating	

Other: PREMIUM EFFICIENCY; CLASS 1, DIV 1; WINDING: B; WEIGHT: 100 LBS

SPARE PARTS PROVIDED PER CONTRACT

Part No.	Part Name	Quantity
	ROTATING BRUSH	1
	SET OF SIDE SEALS & CURVED SEALS	1
	BOTTOM BRUSH	1

RECOMMENDED SPARE PARTS

Part No.	Part Name	Quantity
	TOP SPROCKET TENSION FRAME BEARING AND TOP SPROCKET (SPLIT STYLE)	2
	CHAIN	1
	MASTERLINK CONNECTION PIECES	4
	BRUSH SHAFT BEARING	2
	ROTATING BRUSH	1SET
	BOTTOM SEAL SET (BRUSH, PLATE, RUBBER)	1
	BOTTOM SPROCKET	1
	GEAR REDUCER (ONE EACH FOR THE SCREEN, BRUSH, AND ROLLER DRIVES)	3
	MOTOR (ONE EACH FOR THE SCREEN, BRUSH, AND ROLLER DRIVES)	3

(Jun 1990; Revised Oct 2001, Revised Nov 2007)

Copyright 1991 HDR Engineering, Inc.

EXHIBIT C2

Equipment Record

Recommended Maintenance Summary

Equipment Description	Project Equip. Tag No(s).
MODEL WT/FRS 700x65/8 FILTERSCREEN	SCN12004B/WT SERIAL NO.: 600.90/63

RECOMMENDED BREAK-IN MAINTENANCE (FIRST OIL CHANGES, ETC.)	INITIAL COMPLETION * FOLLOWING START-UP						
	D	W	M	Q	S	A	Hours
Change oil after initial run in period (about 1 month)			X				

RECOMMENDED PREVENTIVE MAINTENANCE	PM TASK INTERVAL *						
	D	W	M	Q	S	A	Hours
Check oil level in gearboxes				X			
Change oil in gearboxes						X	10,000
Check motor bearings						X	12,000
Grease upper bearings				X			
Grease lower bearings		X					
Lubricate drive box links			X				
Check drive units for oil leaks	X						
Check equipment for universal noises	X						
Check for leaks around the housing		X					
Check that the screen chain is running smoothly		X					
Check for any visible damage	X						
Spray chains with chain lube			X				
Check water supply/check for correct water pressure (15gpm)	X						
Visual check compactor hopper for blockage	X						

* D = Daily W = Weekly M = Monthly Q = Quarterly S = Semiannual A = Annual Hours = Run Time Interval

(Jun 1990; Revised Oct 2001, Revised Nov 2007)

Copyright 1991 HDR Engineering, Inc.

EXHIBIT C3

Equipment Record

Lubrication Summary

Equipment Description	Project Equip. Tag No(s).
MODEL WT/FRS 700x65/8 FILTERSCREEN	SCN12004B/ WT SERIAL No.: 600.90/63

Lubricant Point GEARBOXES

Lubricant Type		Manufacturer	Product	AGMA #	SAE #	ISO
	1	MOBIL	MOBILGEAR 636	8	90	VG 680
	2					
	3					
	4					
	5					

Lubricant Point DRIVE BOX LINKS

Lubricant Type		Manufacturer	Product	AGMA #	SAE #	ISO
	1	ANY	MOLYBDENUM CHAIN LUBE	8	140	VG 680
	2					
	3					
	4					
	5					

Lubricant Point SCREEN LOWER BEARING

Lubricant Type		Manufacturer	Product	AGMA #	SAE #	ISO
	1	SHELL	RETINAX LX	8	140	VG 220
	2					
	3					
	4					
	5					

Lubricant Point UPPER BEARINGS

Lubricant Type		Manufacturer	Product	AGMA #	SAE #	ISO
	1	SHELL	RETINAX LX	8	140	VG 220
	2					
	3					
	4					
	5					

Lubricant Point

Lubricant Type		Manufacturer	Product	AGMA #	SAE #	ISO
	1					
	2					
	3					
	4					
	5					

Lubricant Point

Lubricant Type		Manufacturer	Product	AGMA #	SAE #	ISO
	1					
	2					
	3					
	4					
	5					

(Feb 1991; Revised Oct 2001, Revised Nov 2007)
Copyright 1991 HDR Engineering, Inc.

EXHIBIT C1

Equipment Record

Equipment Data and Spare Parts Summary

Project Name: WENATCHEE WWTP IMPROVEMENTS PROJECT P0913	Specification Section: 11092
Equipment Name: MODEL WT/FRS 700x65/8 FILTERSCREEN`	Year Installed: 2012
Project Equipment Tag No(s).: SCN12004B/WT SERIAL No.: 600.90/63	
Equipment Manufacturer: WASTE-TECH, A DIVISION OF KUSTERS ZIMA CORPORATION	Project/ Order No. WT56722
Address: 101 ZIMA PARK DRIVE, SPARTANBURG, SC 29301	Phone: (864) 576-0660
Fax: (864) 587-5761 / Web Site: www.kusterswater.com	E-mail: kzc@kusterszima.com
Local Vendor/Service Center: WASTE-TECH, A DIVISION OF KUSTERS ZIMA CORPORATION	
Address: 101 ZIMA PARK DRIVE, SPARTANBURG, SC 29301	Phone: (864) 576-0660
Fax: (864) 587-5761 / Web Site: www.kusterswater.com	E-mail: kzc@kusterszima.com

MECHANICAL NAMEPLATE DATA

Equip. GEAR REDUCER - BRUSH DRIVE 12.96:1			Serial No. 870245755.12.12.002	
Make SEW EURODRIVE			Model No. SA 67	
ID No.	Frame No. AM145 ADAPTOR	HP	RPM 129	Cap.
Size 117 LBS	TDH	Imp. Sz.	CFM	PSI

Other: AGMA RATING: II

ELECTRICAL NAMEPLATE DATA

Equip. MOTOR - BRUSH DRIVE					Serial No. EX2125324018			
Make TECO WESTINGHOUSE					Model No. EP0024C			
ID No.	Frame No. 145 TC	HP 2	V. 230-460 V	Amp. 2.78A @ 460V	HZ 60	PH 3	RPM 1800	SF 1.15
Duty	Code C	Ins. Cl. F	Type TEFC	NEMA YES	C Amb.	Temp. Rise	Rating	

Other: PREMIUM EFFICIENCY; CLASS 1, DIV 1; WEIGHT: 65 LBS

SPARE PARTS PROVIDED PER CONTRACT

Part No.	Part Name	Quantity
	ROTATING BRUSH	1
	SET OF SIDE SEALS & CURVED SEALS	1
	BOTTOM BRUSH	1

RECOMMENDED SPARE PARTS

Part No.	Part Name	Quantity
	TOP SPROCKET TENSION FRAME BEARING & TOP SPROCKET (SPLIT STYLE)	2
	CHAIN	1
	MASTERLINK CONNECTION PIECES	4
	BRUSH SHAFT BEARING	2
	ROTATING BRUSH	1 SET
	BOTTOM SEAL SET (BRUSH, PLATE, RUBBER)	1
	BOTTOM SPROCKET	1
	GEAR REDUCER (ONE EACH FOR THE SCREEN, BRUSH, AND ROLLER DRIVES)	3
	MOTOR (ONE EACH FOR THE SCREEN, BRUSH, AND ROLLER DRIVES)	3

(Jun 1990; Revised Oct 2001, Revised Nov 2007)

Copyright 1991 HDR Engineering, Inc.

EXHIBIT C2

Equipment Record

Recommended Maintenance Summary

Equipment Description	Project Equip. Tag No(s).
MODEL WT/FRS 700x65/8 FILTERSCREEN	SCN12004B/WT SERIAL NO.: 600.90/63

RECOMMENDED BREAK-IN MAINTENANCE (FIRST OIL CHANGES, ETC.)	INITIAL COMPLETION * FOLLOWING START-UP						
	D	W	M	Q	S	A	Hours
Change oil after initial run in period (about 1 month)			X				

RECOMMENDED PREVENTIVE MAINTENANCE	PM TASK INTERVAL *						
	D	W	M	Q	S	A	Hours
Check oil level in gearboxes				X			
Change oil in gearboxes						X	10,000
Check motor bearings						X	12,000
Grease upper bearings				X			
Grease lower bearings		X					
Lubricate drive box links			X				
Check drive units for oil leaks	X						
Check equipment for universal noises	X						
Check for leaks around the housing		X					
Check that the screen chain is running smoothly		X					
Check for any visible damage	X						
Spray chains with chain lube			X				
Check water supply/check for correct water pressure (15gpm)	X						
Visual check compactor hopper for blockage	X						

* D = Daily W = Weekly M = Monthly Q = Quarterly S = Semiannual A = Annual Hours = Run Time Interval

(Jun 1990; Revised Oct 2001, Revised Nov 2007)

Copyright 1991 HDR Engineering, Inc.

EXHIBIT C3

Equipment Record

Lubrication Summary

Equipment Description	Project Equip. Tag No(s).
MODEL WT/FRS 700x65/8 FILTERSCREEN	SCN12004B/ WT SERIAL No.: 600.90/63

Lubricant Point GEARBOXES

Lubricant Type		Manufacturer	Product	AGMA #	SAE #	ISO
	1	MOBIL	MOBILGEAR 636	8	90	VG 680
	2					
	3					
	4					
	5					

Lubricant Point DRIVE BOX LINKS

Lubricant Type		Manufacturer	Product	AGMA #	SAE #	ISO
	1	ANY	MOLYBDENUM CHAIN LUBE	8	140	VG 680
	2					
	3					
	4					
	5					

Lubricant Point SCREEN LOWER BEARING

Lubricant Type		Manufacturer	Product	AGMA #	SAE #	ISO
	1	SHELL	RETINAX LX	8	140	VG 220
	2					
	3					
	4					
	5					

Lubricant Point UPPER BEARINGS

Lubricant Type		Manufacturer	Product	AGMA #	SAE #	ISO
	1	SHELL	RETINAX LX	8	140	VG 220
	2					
	3					
	4					
	5					

Lubricant Point

Lubricant Type		Manufacturer	Product	AGMA #	SAE #	ISO
	1					
	2					
	3					
	4					
	5					

Lubricant Point

Lubricant Type		Manufacturer	Product	AGMA #	SAE #	ISO
	1					
	2					
	3					
	4					
	5					

(Feb 1991; Revised Oct 2001, Revised Nov 2007)
Copyright 1991 HDR Engineering, Inc.

EXHIBIT C1

Equipment Record

Equipment Data and Spare Parts Summary

Project Name: WENATCHEE WWTP IMPROVEMENTS PROJECT P0913	Specification Section: 11092
Equipment Name: MODEL WT/FRS 700x65/8 FILTERSCREEN	Year Installed: 2012
Project Equipment Tag No(s).: SCN12004B/WT SERIAL No.: 600.90/63	
Equipment Manufacturer: WASTE-TECH, A DIVISION OF KUSTERS ZIMA CORPORATION	Project/ Order No. WT56722
Address: 101 ZIMA PARK DRIVE, SPARTANBURG, SC 29301	Phone: (864) 576-0660
Fax: (864) 587-5761 / Web Site: www.kusterswater.com	E-mail: kzc@kusterszima.com
Local Vendor/Service Center: WASTE-TECH, A DIVISION OF KUSTERS ZIMA CORPORATION	
Address: 101 ZIMA PARK DRIVE, SPARTANBURG, SC 29301	Phone: (864) 576-0660
Fax: (864) 587-5761 / Web Site: www.kusterswater.com	E-mail: kzc@kusterszima.com

MECHANICAL NAMEPLATE DATA

Equip. GEAR REDUCER - DEFLECTOR DRIVE 110.73:1			Serial No. 870245758.12.12.001	
Make SEW EURODRIVE			Model No. SA 47	
ID No.	Frame No. AM56 ADAPTOR	HP	RPM 16	Cap.
Size 33 LBS	TDH	Imp. Sz.	CFM	PSI
Other: AGMA RATING: II; SF: 1.6				

ELECTRICAL NAMEPLATE DATA

Equip. MOTOR - DEFLECTOR DRIVE					Serial No. F1206041362			
Make BALDOR RELIANCE					Model No. VEM3538			
ID No.	Frame No.	HP 1/2	V. 460v	Amp. 0.78a @ 460v	HZ 60	PH 3	RPM 1735	SF 1.25
Duty	Code B	Ins. Cl. F	Type TEFC	NEMA YES	C Amb.	Temp. Rise B	Rating	
Other: MOUNTING: C-FACE, DIRECT COUPLED; WEIGHT: 31 LBS								

SPARE PARTS PROVIDED PER CONTRACT

Part No.	Part Name	Quantity
	ROTATING BRUSH	1
	SET OF SIDE SEALS & CURVED SEALS	1
	BOTTOM BRUSH	1

RECOMMENDED SPARE PARTS

Part No.	Part Name	Quantity
	TOP SPROCKET TENSION FRAME BEARING & TOP SPROCKET (SPLIT STYLE)	2
	CHAIN	1
	MASTERLINK CONNECTION PIECES	4
	BRUSH SHAFT BEARING	2
	ROTATING BRUSH	1 SET
	BOTTOM SEAL SET (BRUSH, PLATE, RUBBER)	1
	BOTTOM SPROCKET	1
	GEAR REDUCER (ONE EACH FOR THE SCREEN, BRUSH, AND ROLLER DRIVES)	3
	MOTOR (ONE EACH FOR THE SCREEN, BRUSH, AND ROLLER DRIVES)	3

(Jun 1990; Revised Oct 2001, Revised Nov 2007)
Copyright 1991 HDR Engineering, Inc.

EXHIBIT C2

Equipment Record

Recommended Maintenance Summary

Equipment Description	Project Equip. Tag No(s).
MODEL WT/FRS 700x65/8 FILTERSCREEN	SCN12004B/WT SERIAL NO.: 600.90/63

RECOMMENDED BREAK-IN MAINTENANCE (FIRST OIL CHANGES, ETC.)	INITIAL COMPLETION * FOLLOWING START-UP						
	D	W	M	Q	S	A	Hours
Change oil after initial run in period (about 1 month)			X				

RECOMMENDED PREVENTIVE MAINTENANCE	PM TASK INTERVAL *						
	D	W	M	Q	S	A	Hours
Check oil level in gearboxes				X			
Change oil in gearboxes						X	10,000
Check motor bearings						X	12,000
Grease upper bearings				X			
Grease lower bearings		X					
Lubricate drive box links			X				
Check drive units for oil leaks	X						
Check equipment for universal noises	X						
Check for leaks around the housing		X					
Check that the screen chain is running smoothly		X					
Check for any visible damage	X						
Spray chains with chain lube			X				
Check water supply/check for correct water pressure (15gpm)	X						
Visual check compactor hopper for blockage	X						

* D = Daily W = Weekly M = Monthly Q = Quarterly S = Semiannual A = Annual Hours = Run Time Interval

(Jun 1990; Revised Oct 2001, Revised Nov 2007)

Copyright 1991 HDR Engineering, Inc.

EXHIBIT C3

Equipment Record

Lubrication Summary

Equipment Description	Project Equip. Tag No(s).
MODEL WT/FRS 700x65/8 FILTERSCREEN	SCN12004B/ WT SERIAL No.: 600.90/63

Lubricant Point GEARBOXES

Lubricant Type		Manufacturer	Product	AGMA #	SAE #	ISO
	1	MOBIL	MOBILGEAR 636	8	90	VG 680
	2					
	3					
	4					
	5					

Lubricant Point DRIVE BOX LINKS

Lubricant Type		Manufacturer	Product	AGMA #	SAE #	ISO
	1	ANY	MOLYBDENUM CHAIN LUBE	8	140	VG 680
	2					
	3					
	4					
	5					

Lubricant Point SCREEN LOWER BEARING

Lubricant Type		Manufacturer	Product	AGMA #	SAE #	ISO
	1	SHELL	RETINAX LX	8	140	VG 220
	2					
	3					
	4					
	5					

Lubricant Point UPPER BEARINGS

Lubricant Type		Manufacturer	Product	AGMA #	SAE #	ISO
	1	SHELL	RETINAX LX	8	140	VG 220
	2					
	3					
	4					
	5					

Lubricant Point

Lubricant Type		Manufacturer	Product	AGMA #	SAE #	ISO
	1					
	2					
	3					
	4					
	5					

Lubricant Point

Lubricant Type		Manufacturer	Product	AGMA #	SAE #	ISO
	1					
	2					
	3					
	4					
	5					

(Feb 1991; Revised Oct 2001, Revised Nov 2007)
Copyright 1991 HDR Engineering, Inc.

EXHIBIT C1

Equipment Record

Equipment Data and Spare Parts Summary

Project Name: WENATCHEE WWTP IMPROVEMENTS PROJECT P0913	Specification Section: 11095
Equipment Name: MODEL WT/FSM SPW 200 WASHER/COMPACTOR w/ AGITATOR	Year Installed: 2012
Project Equipment Tag No(s).: WHR-12007A/WT SERIAL No.: 615.20/63	
Equipment Manufacturer: WASTE-TECH, A DIVISION OF KUSTERS ZIMA CORPORATION	Project/ Order No. WT56722
Address: 101 ZIMA PARK DRIVE, SPARTANBURG, SC 29301	Phone: (864) 576-0660
Fax: (864) 587-5761 / Web Site: www.kusterswater.com	E-mail: kzc@kusterszima.com
Local Vendor/Service Center: WASTE-TECH, A DIVISION OF KUSTERS ZIMA CORPORATION	
Address: 101 ZIMA PARK DRIVE, SPARTANBURG, SC 29301	Phone: (864) 576-0660
Fax: (864) 587-5761 / Web Site: www.kusterswater.com	E-mail: kzc@kusterszima.com

MECHANICAL NAMEPLATE DATA

Equip. GEAR REDUCER - COMPACTOR DRIVE 228.93:1			Serial No. 01.1812101.0001.12	
Make SEW EURODRIVE			Model No. FAF 87	
ID No.	Frame No. AM 145 ADAPTOR	HP	RPM 8	Cap.
Size 267 LBS	TDH	Imp. Sz.	CFM	PSI

Other: SF: 1.5; MOUNTING: C-FACE

ELECTRICAL NAMEPLATE DATA

Equip. MOTOR - COMPACTOR DRIVE					Serial No. DX3124323006			
Make TECO WESTINGHOUSE					Model No. EP0034C			
ID No.	Frame No. 145 TC	HP 3	V. 230-460 V	Amp. 3.74 A @ 460V	HZ 60	PH 3	RPM 1800	SF 1.15
Duty	Code B	Ins. Cl. F	Type TEFC	NEMA YES	C Amb. 40 C	Temp. Rise	Rating	

Other:

SPARE PARTS PROVIDED PER CONTRACT

Part No.	Part Name	Quantity
	WASHWATER SOLENOID VALVES OF EACH SIZE	2
	BRUSH CLIPS	12
	SETS OF BRUSHES	2
	SPARE BULBS FOR CONTROL PANEL INDICATING LIGHTS	6
	SET OF FUSES	1
	SETS OF BAGGING HOSE	5

RECOMMENDED SPARE PARTS

Part No.	Part Name	Quantity
	SELF ALIGNING ROLLER BEARING	1
	RADIAL SHAFT SEAL	1
	V-RING SEAL	1
	O-RING	1
	BRUSH WITH RETAINING CLIP	1
	SCREW AUGER	1
	WEAR BARS WITH HARDWARE	1
	AGITATOR MOTOR	1
	LEVEL SENSOR	1

(Jun 1990; Revised Oct 2001, Revised Nov 2007)

Copyright 1991 HDR Engineering, Inc.

EXHIBIT C2

Equipment Record

Recommended Maintenance Summary

Equipment Description	Project Equip. Tag No(s).
MODEL WT/FSM SPW 200 WASHER COMPACTOR w/ AGITATOR	WHR-12007A/WT SERIAL No.: 615.20/63

RECOMMENDED BREAK-IN MAINTENANCE (FIRST OIL CHANGES, ETC.)	INITIAL COMPLETION * FOLLOWING START-UP						
	D	W	M	Q	S	A	Hours
Change oil after initial run in period (about 1 month)			X				
Lubricating the bearings		X					

RECOMMENDED PREVENTIVE MAINTENANCE	PM TASK INTERVAL *						
	D	W	M	Q	S	A	Hours
Check oil level in gearboxes				X			
Change oil in gearboxes						X	10,000
Check motor bearings						X	12,000
Grease bearings			X				
Check drive units for oil leaks	X						
Check equipment for unusual noises	X						
Check for leaks around the housing		X					
Tighten wearing strips				X			
Check for any visible damage		X					
Resetting Brush				X			
Remove & clean jets					X		
High pressure spray cleaning of exterior				X			
Check all fasteners for tightness		X					

* D = Daily W = Weekly M = Monthly Q = Quarterly S = Semiannual A = Annual Hours = Run Time Interval

(Jun 1990; Revised Oct 2001, Revised Nov 2007)

Copyright 1991 HDR Engineering, Inc.

EXHIBIT C3

Equipment Record

Lubrication Summary

Equipment Description	Project Equip. Tag No(s).
MODEL WT/FSM SPW 200 WASHER/COMPACTOR w/AGITATOR	WHR-12007A/WT SERIAL No.: 615.20/63

Lubricant Point GEARBOXES

Lubricant Type	Manufacturer	Product	AGMA #	SAE #	ISO
1	MOBIL	MOBILGEAR 680	8	140	VG 680
2					
3					
4					
5					

Lubricant Point BEARINGS

Lubricant Type	Manufacturer	Product	AGMA #	SAE #	ISO
1	SHELL	RETINAX LX	8	140	VG 220
2					
3					
4					
5					

Lubricant Point

Lubricant Type	Manufacturer	Product	AGMA #	SAE #	ISO
1					
2					
3					
4					
5					

Lubricant Point

Lubricant Type	Manufacturer	Product	AGMA #	SAE #	ISO
1					
2					
3					
4					
5					

Lubricant Point

Lubricant Type	Manufacturer	Product	AGMA #	SAE #	ISO
1					
2					
3					
4					
5					

Lubricant Point

Lubricant Type	Manufacturer	Product	AGMA #	SAE #	ISO
1					
2					
3					
4					
5					

(Feb 1991; Revised Oct 2001, Revised Nov 2007)
Copyright 1991 HDR Engineering, Inc.

EXHIBIT C1

Equipment Record

Equipment Data and Spare Parts Summary

Project Name: WENATCHEE WWTP IMPROVEMENTS PROJECT P0913	Specification Section: 11095
Equipment Name: MODEL WT/FSM SPW 200 WASHER/COMPACTOR w/ AGITATOR	Year Installed: 2012
Project Equipment Tag No(s).: WHR-12007B/WT SERIAL No.: 615.20/64	
Equipment Manufacturer: WASTE-TECH, A DIVISION OF KUSTERS ZIMA CORPORATION	Project/ Order No. WT56722
Address: 101 ZIMA PARK DRIVE, SPARTANBURG, SC 29301	Phone: (864) 576-0660
Fax: (864) 587-5761 / Web Site: www.kusterswater.com	E-mail: kzc@kusterszima.com
Local Vendor/Service Center: WASTE-TECH, A DIVISION OF KUSTERS ZIMA CORPORATION	
Address: 101 ZIMA PARK DRIVE, SPARTANBURG, SC 29301	Phone: (864) 576-0660
Fax: (864) 587-5761 / Web Site: www.kusterswater.com	E-mail: kzc@kusterszima.com

MECHANICAL NAMEPLATE DATA

Equip. GEAR REDUCER - COMPACTOR DRIVE 228.93:1			Serial No. 01.1812101.0002.12	
Make SEW EURODRIVE			Model No. FAF 87	
ID No.	Frame No. AM 145 ADAPTOR	HP	RPM 8	Cap.
Size 267 LBS	TDH	Imp. Sz.	CFM	PSI

Other: SF: 1.5; MOUNTING: C-FACE

ELECTRICAL NAMEPLATE DATA

Equip. MOTOR - COMPACTOR DRIVE					Serial No. DX3124323002			
Make TECO WESTINGHOUSE					Model No. EP0034C			
ID No.	Frame No. 145 TC	HP 3	V. 230-460 V	Amp. 3.74 A @ 460V	HZ 60	PH 3	RPM 1800	SF 1.15
Duty	Code B	Ins. Cl. F	Type TEFC	NEMA YES	C Amb. 40 C	Temp. Rise	Rating	

Other:

SPARE PARTS PROVIDED PER CONTRACT

Part No.	Part Name	Quantity
	WASHWATER SOLENOID VALVES OF EACH SIZE	2
	BRUSH CLIPS	12
	SETS OF BRUSHES	2
	SPARE BULBS FOR CONTROL PANEL INDICATING LIGHTS	6
	SET OF FUSES	1
	SETS OF BAGGING HOSE	5

RECOMMENDED SPARE PARTS

Part No.	Part Name	Quantity
	SELF ALIGNING ROLLER BEARING	1
	RADIAL SHAFT SEAL	1
	V-RING SEAL	1
	O-RING	1
	BRUSH WITH RETAINING CLIP	1
	SCREW AUGER	1
	WEAR BARS WITH HARDWARE	1
	AGITATOR MOTOR	1
	LEVEL SENSOR	1

(Jun 1990; Revised Oct 2001, Revised Nov 2007)

Copyright 1991 HDR Engineering, Inc.

EXHIBIT C2

Equipment Record

Recommended Maintenance Summary

Equipment Description	Project Equip. Tag No(s).
MODEL WT/FSM SPW 200 WASHER COMPACTOR w/ AGITATOR	WHR-12007B/WT SERIAL No.: 615.20/64

RECOMMENDED BREAK-IN MAINTENANCE (FIRST OIL CHANGES, ETC.)	INITIAL COMPLETION * FOLLOWING START-UP						
	D	W	M	Q	S	A	Hours
Change oil after initial run in period (about 1 month)			X				
Lubricating the bearings		X					

RECOMMENDED PREVENTIVE MAINTENANCE	PM TASK INTERVAL *						
	D	W	M	Q	S	A	Hours
Check oil level in gearboxes				X			
Change oil in gearboxes						X	10,000
Check motor bearings						X	12,000
Grease bearings			X				
Check drive units for oil leaks	X						
Check equipment for unusual noises	X						
Check for leaks around the housing		X					
Tighten wearing strips				X			
Check for any visible damage		X					
Resetting Brush				X			
Remove & clean jets					X		
High pressure spray cleaning of exterior				X			
Check all fasteners for tightness		X					

* D = Daily W = Weekly M = Monthly Q = Quarterly S = Semiannual A = Annual Hours = Run Time Interval

(Jun 1990; Revised Oct 2001, Revised Nov 2007)

Copyright 1991 HDR Engineering, Inc.

EXHIBIT C3

Equipment Record

Lubrication Summary

Equipment Description	Project Equip. Tag No(s).
MODEL WT/FSM SPW 200 WASHER/COMPACTOR w/AGITATOR	WHR-12007B/WT SERIAL No.: 615.20/64

Lubricant Point GEARBOXES

Lubricant Type		Manufacturer	Product	AGMA #	SAE #	ISO
	1	MOBIL	MOBILGEAR 680	8	140	VG 680
	2					
	3					
	4					
	5					

Lubricant Point BEARINGS

Lubricant Type		Manufacturer	Product	AGMA #	SAE #	ISO
	1	SHELL	RETINAX LX	8	140	VG 220
	2					
	3					
	4					
	5					

Lubricant Point

Lubricant Type		Manufacturer	Product	AGMA #	SAE #	ISO
	1					
	2					
	3					
	4					
	5					

Lubricant Point

Lubricant Type		Manufacturer	Product	AGMA #	SAE #	ISO
	1					
	2					
	3					
	4					
	5					

Lubricant Point

Lubricant Type		Manufacturer	Product	AGMA #	SAE #	ISO
	1					
	2					
	3					
	4					
	5					

Lubricant Point

Lubricant Type		Manufacturer	Product	AGMA #	SAE #	ISO
	1					
	2					
	3					
	4					
	5					

(Feb 1991; Revised Oct 2001, Revised Nov 2007)
Copyright 1991 HDR Engineering, Inc.

KUSTERS WATER
a division of KUSTERS ZIMA

OWNER'S ACCEPTANCE CERTIFICATE

DATE: _____

CONTRACTOR NAME: _____

ADDRESS: _____

CITY, STATE AND ZIP: _____

PROJECT NAME: _____ REF. NO.: _____

PLANT CONTACT: _____

ADDRESS: _____

CITY, STATE AND ZIP: _____

TELEPHONE NO./FAX NO.: _____

WASTE TECH EQUIPMENT – QUANTITY AND DESCRIPTION

UPON SIGNING THIS CONTRACTOR'S ACCEPTANCE CERTIFICATE, the Contractor and his client agree the equipment Waste-Tech, A Division of Küsters Zima Corporation, has supplied is in proper operating condition and that all operator training has been completed to their satisfaction. The Contractor further agrees to pay in full any outstanding balance due Waste-Tech.

_____
Owner Representative

Date: _____

_____
Waste-Tech Representative

WASTE▪TECH
a division of KUSTERS ZIMA

TRAINING SIGN-OFF SHEET

PLANT NAME: WENATCHEE WWTP
ADDRESS: 201 N. WORTHEN ST. WENATCHEE, WA 98801
CONTACT #:

ATTENDANCE

	PRINTED NAME	SIGNATURE
1.	Bob Ritter	Bob Ritter
2.	Jim BRUMBACK	Jim Brumback
3.	Bob Calhoun	Bob Calhoun
4.	Devlin Walt	Devlin Walt
5.	Chad Noah	Chad N
6.	PETE MOSER	[illegible]
7.		
8.		
9.		
10.		

The above personnel have completed training on the correct operation and maintenance of the referenced Waste-Tech, A Division of Küsters Zima Corporation, equipment.

Project: 56722 Equipment: 2-SCREENS, 2-WASHER COMPACTORS, CONTROLS

WT Rep: DENNIS STUHE Date: 11-DEC.-2012

SECTION 1

GENERAL INFORMATION

WASTE▪TECH
a division of KUSTERS ZIMA

1.1

SCOPE OF SUPPLY

WASTE▪TECH
a division of KUSTERS ZIMA

OPERATION & MAINTENANCE

WENATCHEE WWTP IMPROVEMENTS
PROJECT PO913
WENATCHEE, WA

SECTION 11092 – PERFORATED PLATE SCREENS
SECTION 11095 – SCREENINGS WASHER COMPACTOR

SCOPE OF SUPPLY

No.	Qty.	Description
1	2	Model WT/FRS 700 x 65/6 Filterscreen (SCN-12004A, SCN-12004B)
1a	2	Screen Drive Gear Reducer & Motor; Inverter Duty – TEFC; Class I, Div. 2
1b	2	Brush Drive Gear Reducer and Motor; TEFC; Class I, Div. 2
1c	2	Roller Drive Gear Reducer and Motor; TEFC; Class I, Div. 2
1d	2	Screen Washwater Components as follows: 1” Strainer 1” Ball Valve 1” Solenoid Valve Rotameter
1e	2	Control Panel (CP-12004A, CP-12004B); NEMA 12 rating
1f	2	Local Control Station – Explosion Proof; NEMA 7 rating
1g	2	Ultrasonic Level Controller with Level Transducers & Mounting Brackets
1h	2	High Level Float Switch
2	2	Screenings Washer Compactor w/agitator (WHR-12007A, WHR-12007B)
2a	2	Gear Reducer and Motor; Inverter Duty – TEFC; Class I, Div. 2
2b	2	Screenings Compactor Inlet Hopper
2c	2	Screenings Compactor Washwater Components as follows: 1” Solenoid Valve – Explosion Proof 1” Strainer 1” Ball Valve Rotameter
2d	2	Screenings Compactor Discharge Pipe
2e	2	Control Panel (CP-12007A, CP-12007B); NEMA 12 rating
2f	2	Local Control Station – Explosion Proof; NEMA 7
2g	2	Agitator with Motor
2h	2	Bagging Unit – Longofill Baggers
2i	2	Ultrasonic Level Sensors (Pointek ULS200 for Start & High level; Float Switch for High-High level)
2j	2	Drain Valve
3		Anchors as listed in Section 4.3 and 5.3
4		Spare Parts as listed in Section 1.4
5		Start Up, Training Services as specified in contract

WASTE▪TECH
a division of KUSTERS ZIMA

1.2

WEIGHT OF EQUIPMENT

OPERATION & MAINTENANCE

WENATCHEE WWTP IMPROVEMENTS
PROJECT PO913
WENATCHEE, WA

SECTION 11092 – PERFORATED PLATE SCREENS
SECTION 11095 – SCREENINGS WASHER COMPACTOR

WEIGHT of EQUIPMENT

Description	Model #	Shipping Weight
Filterscreen w/Drives Assembled	WT/FRS 700 x 65/6	4500 lbs. each
Screenings Washer Compactor with Agitator	SPW200	1,650 lbs. each

WASTE▪TECH
a division of KUSTERS ZIMA

1.3

COMPREHENSIVE PARTS LIST

Compactor Parts List

Part No.	Part Description	Price
A124046	Motor, 3HP 1800RPM 182TC 230/460	$573.45
A119205	Valve, Solenoid 1” NPT 304 SS 120V NC	$681.23
A671875	Valve, Ball 1” 316 SS #76-105-01	$128.54
A119206	Strainer, 1” NPT 304 SS	$434.78
A126539	Flowmeter, 1” NPT High Pressure	$649.37
A126540	Valve, 316 SS 4” NPT ELEC, Actuated Ball	$3,129.45
A126549	Transmitter, Ultrasonic Prosonic M FMU40	$1,947.17
A124820	Switch, Float Non-Mercury	$44.18
A124032	Switch, Magnetic Contact, EXP-Proof	$319.53
A120285	Cartridge, HIT RE 500 SD Adhesive	$62.09
A111005	THRD Rod 316 ¾-10	$11.73
A594533	Nipple, 4 NPT x 4 316 SS	$50.07
A572447	Gasket, 4” A733456 CGR2750	$8.45
A126551	Control Unit, Process Transmitter	$660.30
A118403	Bottom Sprocket 1.4462	$739.61
A114997	Stub Flange 106.5 mm Long FRS since 04/2002 (filterpanels with side sealings) + 4 x M 12x25 + lock washer	$284.55
A114986	O-Ring	$11.38
A114987	V-Ring	$9.70
A114988	Cover + 3 x M 8x30 + lock washer	$57.92
A114989	Snap Ring	$8.04
A118402	Top Sprocket Disc (2 pieces) diameter 60 & 80 1.4462 + 5 x special bolts M16x65 + self-locking nuts	$1,222.62
A118635	Hub for the sprocket diameter 60 1.4462	$529.60
A115922	Chain 1.4571/1.4462 (V4A)	$301.32
A115923	Masterlink cranked without bolt & ring 1.4571/1.4462	$116.62
A115924	Bolt 1.4462	$33.60
A116606	Ring 1.4571	$4.84
A124700	Inspection Cover – Plastic	$52.84
A124701	Frame for inspection cover – plastic bolt M3	$26.43
A115073	Bottom brush for screens type FRS + FR + filter type round (1 x SW)	$66.82
A114965	Round brush system 2 (standard) Diameter of the ground body 140 mm Diameter overall 450 mm PP Transparent 2.00 x 180 mm Length of one element 100 mm	$108.73
A115076.	Fixing element + 3 x M8x20 + spring lock washer	$40.15
A115392	Additional brush over the top sprocket	$21.34
A118400	Steel Plate for additional brush over the top sprocket	$539.23
A115077	Filter Panels, type round without lifters and with side sealings V4A	$856.87
A118637	Filter Panels, type round with lifters & side sealings V4A	$880.35

Screen Parts List

Part No.	Part Description	Price
A712900	Pipe 316 4 S10	$33.08
A111268	Tube 316 ¾ OD x .065 Wall	$6.22
A117907	Hinge, Narrow Profile Lift Off SS	$68.76
A109191	Flat UHMMW ¾ X 2 ½ White	$8.50
A177898	Bearing, Take-Up 60mm w/UC 212 Inset	$120.20
A726105	Round 316 2 3/8”	$79.50
A610500	V-Ring, V-60S	$3.98
A117903	Device, Shaft Locking 60mm ID x 90mm OD	$78.85
A118404	Reducer, Gear 258.18:1 Ratio	$3,615.25
A725100	Round 316 1 ½”	$49.63
A724300	Round 316 1”	$69.83
A778080	Bushing, torque arm (for SA77)	$34.43
A124799	Motor, 3 HP 1800 RPM TEFC	$501.69
A710950	Pipe 316L 1 ¼ S10	$10.07
A556120	Coupling, 1 NPT 316SS	$6.91
A122741	Nozzle, Spray ¼” NPT 316SS 65°	$47.31
A724150	Round 316 7/8”	$11.36
A777724	Spacer, UCFT 208 Bearing	$2.25
A118405	Bearing, Flange 40mm 2 Bolt	$48.90
A795035	THRD Rod 316 M12-1.75	$9.41
A712700	Pipe 316 3 1/2 S40	$58.05
A725850	Round 316 2"	$57.58
A725850	Round 316 2"	$57.59
A117978	Reducer, Gear 12.96:1 Ratio	$1,451.27
A785741	Arm, SA67 Torque 1/2 316	$100.30
A122274	Motor, 2 Hp, 230/460, TEFC 1750 RPM	$443.59
A123297	Reducer, Gear Ratio 110.73:1	$983.32
A121433	Motor, 1/2 Hp, TEFC, 56C	$399.71
A572513	Gasket, 1/8 X 1/2 Cc Neoprene 50 DUR	$0.16
A117907	Hinge, Narrow Profile Lift Off S.S.	$68.76
A117380	Latch, Door Vise Action	$67.33
A117896	Bulkhead, Female 10 mm T X 1/4 NPT 316SS	$23.76
A117897	Fitting, Button Head Grease 1/4 NPT S.S.	$31.98
A115670	Tube 316 10mm OD X 1.5 Wall	$16.55
A115670	Tube 316 10mm OD X 1.5 Wall	$17.35
A118647	Neoprene, 1/4" Thick 70 Degree Shore A	$7.88
A111268	Tube 316 3/4 OD X .065 Wall	$10.99
A118867	Sheet, FAB Reinforced Neoprene RUBB 3/32	$5.94
A116617	Handle, Pull Thermoplastic Black	$7.62
A785685	316-0-01 - Cover, Back Bottom 14ga 316	$297.02
A118364	Flat UHMW 1 5/8 X 2 1/2 White	$17.53

A117902	T-Nut, M8-1.25 Four Prong 304 SS	$0.41
A723825	Round 316 5/8"	$11.45
A712900	Pipe 316 4 S10	$34.55
A778348	Shaft, Hinge	$11.01
A117899	Knob, Metric Nylon W/Stud M8 X 15 316SS	$4.42
A117904	Screw, Flat Head Sock M10-1.5 X 30 316SS	$0.64
A117905	Screw, Flat Head Socket M10-1.5 X 35 mm	$0.73
A114991	Disc, Plastic Spacer	$0.64
A124436	Union, 10mm Tube 316SS	$24.49
A118403	Sprocket, Bottom 1.4462	$753.35
A114997	Flange, Stub L=106.5mm	$237.10
A114986	O-Ring, Cover	$9.48
A114987	V-Ring, V70s	$9.99
A114988	Cover, Bottom Sprocket	$57.56
A114989	Ring, Retaining D-50 Steel	$9.48
A118402	Sprocket, Top (Split Type) 1.4462	$1,041.14
A118635	Hub, F/ Sprocket Diameter. 60 1.4462	$541.73
A115922	Chain, 1.4571/1.4462 (V4A)	$287.79
A115923	Link, Master 1.4571/1.4462	$96.50
A115924	Bolt, 1.4462	$28.78
A116606	Ring, 1.4571	$4.15
A124700	Cover, Inspection Plastic	$44.02
A124701	Frame, Inspection Cover W/ Plastic M3 BLT	$22.01
A115073	Brush, Bottom For Screens	$84.64
A114965	Brush, Round System 2 Standard	$90.57
A115076	Element, Fixing	$37.24
A115392	Brush, Top Sprocket	$17.78
A116936	Plate, Steel F/Additional Brush	$84.65
A115077	Panel, Filter Round W/Out Lifters 1.4571	$413.07
A118400	Panel, Filter Round W/ Lifters 1.4571	$453.70
A120285	Cartridge, HIT RE 500 SD Adhesive	$60.03
A795365	THRD Rod 316 5/8-11	$11.55
A777691	Plate, FSM/Waste-Tech Serial No.	$5.10
A119205	Valve, Solenoid 1" NPT 304 SS 120V NC	$681.23
A671875	Valve, Ball 1" 316SS #76-105-01	$128.54
A119206	Strainer, 1" NPT 304SS	$466.16
A125212	Controller, Ultrasonic Level	$1,839.53
A122441	Transducer, Ultrasonic Level Exp. Proof	$807.63
A114792	Programmer, Handheld	$168.64
A117126	Mount, Universal Box (Ultrasonic Trans.)	$137.02
A124820	Switch, Float Non-Mercury	$44.18

WASTE-TECH
a division of KUSTERS ZIMA

1.4

SPARE PARTS

OPERATION & MAINTENANCE

WENATCHEE WWTP IMPROVEMENTS
PROJECT PO913
WENATCHEE, WA

SECTION 11092 – PERFORATED PLATE SCREENS
SECTION 11095 – SCREENINGS WASHER COSPAREMPACTOR

The Nearest Factory Location to obtain Parts, Service, or Technical Support is as follows:

Waste-Tech
A Division of Küsters Zima Corp.
101 Zima Park Drive
Spartanburg, SC 29301
Phone: 864-594-5595
Fax: 864-587-5761

Contact for Parts and/or Service: Richard Howard, Spares and Distribution Director SPARE PARTS

For each filterscreen, the following spare parts will be provided:

- One (1) rotating brush
- One (1) set of side seals and curved seals
- One (1) bottom brush

For each compactor, the following spare parts will be provided:

- Two (2) washwater solenoid valves of each size
- Twelve (12) brush clips
- Two (2) sets of brushes
- Six (6) spare bulbs for control panel indicating lights
- One (1) set of fuses
- Five (5) sets of bagging hose

SPECIAL TOOLS

There are no special tools required to maintain the equipment which we will supply on this project. Metric and American hand tools are all that are necessary to perform any task.

OPERATION & MAINTENANCE

WENATCHEE WWTP IMPROVEMENTS
PROJECT PO913
WENATCHEE, WA

SECTION 11092 – PERFORATED PLATE SCREENS
SECTION 11095 – SCREENINGS WASHER COMPACTOR

RECOMMENDED SPARE PARTS

FILTERSCREEN

DESCRIPTION	RECOMMENDED QTY
TOP SPROCKET (SPLIT TYPE)	2
TOP SPROCKET TENSION FRAME BEARING	2
CHAIN	1
MASTERLINK CONNECTION PIECES	4
BRUSH SHAFT BEARING	2
SCREEN PANEL WITH TEETH	1
SCREEN PANEL WITHOUT TEETH	2
ROTATING BRUSH	1 SET
BOTTOM SEAL SET (BRUSH, PLATE, RUBBER)	1
BOTTOM SPROCKET	1
SCREEN DRIVE: GEAR REDUCER MOTOR, 3HP	1 1
BRUSH DRIVE: GEAR REDUCER MOTOR, 2HP	1 1
ROLLER DRIVE: GEAR REDUCER MOTOR, ½ HP	1 1

WASTE▪TECH
a division of KUSTERS ZIMA

ENGINEERING SUBMITTAL

WENATCHEE WWTP IMPROVEMENTS
PROJECT PO913
WENATCHEE, WA

SECTION 11092 – PERFORATED PLATE SCREENS
SECTION 11095 – SCREENINGS WASHER COMPACTOR

RECOMMENDED SPARE PARTS

WASHER COMPACTOR w/AGITATOR

DESCRIPTION	RECOMMENDED QTY
SELF ALIGNING ROLLER BEARING	1
RADIAL SHAFT SEAL	1
V-RING SEAL	1
O-RING	1
BRUSH WITH RETAINING CLIP	1
SCREW AUGER	1
WEAR BARS WITH HARDWARE)	1
AGITATOR MOTOR	1
LEVEL SENSOR	1

WASTE-TECH
a division of KUSTERS ZIMA

1.5

WARRANTY:
PERFORATED PLATE SCREENS
and SCREENINGS WASHER COMPACTOR

WT/FSM 700x65/6 FILTERSCREENS WARRANTY LIMITATION OF LIABILITY AND DISCLAIMER

WT/FSM 700x65/6 FILTERSCREENS
WARRANTY LIMITATION OF
LIABILITY AND DISCLAIMER

In return for purchase and full payment for Waste Tech's products, we warrant each product manufactured by us to be free from defects in material and workmanship under normal conditions and use for a period of five (5) years from the date of substantial completion, or as agreed by us in writing. OUR OBLIGATION UNDER THIS WARRANTY IS EXPRESSLY AND EXCLUSIVELY LIMITED to replacing or repairing (at our factory, or elsewhere as agreed by us in writing) any part or parts returned to us with transportation charges prepaid, and which our examination shall show to have been defective. Prior to return of any product or its parts to us, purchaser shall notify Waste Tech of claimed defect, and Waste Tech shall have the right to examine the product at purchaser's location. In the event this examination discloses no defect, purchaser shall have no authority to return the products or parts to us for further examination or repair. All transportation costs shall be to purchaser's account. This warranty shall not apply to any product or part which has been repaired or altered by others, or applied, operated or installed contrary to our instructions, or subjected to misuse, negligence or accident. Our Warranty on accessories and component parts not manufactured by us is expressly limited to that of the manufacturer thereof, unless as agreed by us in writing.

THE FOREGOING WARRANTY IS MADE IN LIEU OF ALL OTHER WARRANTIES, EXPRESSED OR IMPLIED, AND OF ALL OTHER LIABILITIESS AND OBLIGATIONS ON OUR PART, INCLUDING ANY LIABILITY FOR NEGLIGENCE: AND ANY IMPLIED WARRANTY OF MERCHANTABILITY OR FITNESS FOR A PARTICULAR PURPOSE IS EXPRESSLY DISCLAIMED: AND WE EXPRESSLY DENY THE RIGHT OF ANY OTHER PERSON TO INCUR OR ASSUME FOR US ANY OTHER RELIABILITY IN CONNECTION WITH THE SALE OF ANY PRODUCT OR PART BY US. UNDER NO CIRCUMSTANCES, INCLUDING ANY CLAIMS FOR NEGLIGENCE, SHALL WASTE TECH BE LIABLE FOR ANY INCIDENTAL OR CONSEQUENTIAL DAMAGES, COSTS OF INSTALLING OR CONNECTING OR REMOVING OR DISCONNECTING, OR ANY LOSS OR DAMAGES RESULTING FROM A DEFECT IN THE PRODUCT OR PARTS.

WASTE TECH WILL NOT ACCEPT ANY CHARGES FOR MODIFICATIONS, SERVICING, REPAIR, ADJUSTMENT, OR ANY OTHER ITEM WITHOUT AUTHORITY IN THE FORM OF A WRITTEN ORDER ISSUED BY US IN ADVANCE OF DOING THE WORK.

LIMIT OF LIABILITY: WASTE TECH'S TOTAL LIABILITY UNDER THIS ABOVE WARRANTY IS LIMITED TO THE REPAIR OR REPLACEMENT OF ANY DEFECTIVE PART.

SPECIAL WARRANTY LIMITATION NOTE: UNDER NO CIRCUMSTANCES WILL WASTE TECH ASSUME ANY LIABILITY OR REPAIR RESPONSIBILITY FOR PARTS, MATERIAL OR PRODUCTS PLACED INTO SERVICE AND OPERATED AFTER START-UP PRIOR TO OWNER ACCEPTANCE, UNLESS EXPRESSLY AGREED BY US IN WRITING. THE ACT OF PLACING WASTE TECH PARTS, MATERIAL OR PRODUCTS INTO SERVICE PRIOR TO PAYMENT OF OUR INVOICES FOR THE SAME AND WITHOUT OWNER'S ACCEPTANCE, WILL WITHOUT EXCEPTION VOID THE WARRANTY RESPONSIBILITY OF WASTE TECH.

WT/FSM SPW 200 WASHER/COMPACTOR with AGITATOR WARRANTY LIMITATION OF LIABILITY AND DISCLAIMER

WT/FSM SPW 200 WASHER/COMPACTOR with AGITATOR
WARRANTY LIMITATION OF
LIABILITY AND DISCLAIMER

In return for purchase and full payment for Waste Tech's products, we warrant each product manufactured by us to be free from defects in material and workmanship under normal conditions and use for a period of two (2) years from the date of substantial completion, or as agreed by us in writing. OUR OBLIGATION UNDER THIS WARRANTY IS EXPRESSLY AND EXCLUSIVELY LIMITED to replacing or repairing (at our factory, or elsewhere as agreed by us in writing) any part or parts returned to us with transportation charges prepaid, and which our examination shall show to have been defective. Prior to return of any product or its parts to us, purchaser shall notify Waste Tech of claimed defect, and Waste Tech shall have the right to examine the product at purchaser's location. In the event this examination discloses no defect, purchaser shall have no authority to return the products or parts to us for further examination or repair. All transportation costs shall be to purchaser's account. This warranty shall not apply to any product or part which has been repaired or altered by others, or applied, operated or installed contrary to our instructions, or subjected to misuse, negligence or accident. Our Warranty on accessories and component parts not manufactured by us is expressly limited to that of the manufacturer thereof, unless as agreed by us in writing.

THE FOREGOING WARRANTY IS MADE IN LIEU OF ALL OTHER WARRANTIES, EXPRESSED OR IMPLIED, AND OF ALL OTHER LIABILITIESS AND OBLIGATIONS ON OUR PART, INCLUDING ANY LIABILITY FOR NEGLIGENCE: AND ANY IMPLIED WARRANTY OF MERCHANTABILITY OR FITNESS FOR A PARTICULAR PURPOSE IS EXPRESSLY DISCLAIMED: AND WE EXPRESSLY DENY THE RIGHT OF ANY OTHER PERSON TO INCUR OR ASSUME FOR US ANY OTHER RELIABILITY IN CONNECTION WITH THE SALE OF ANY PRODUCT OR PART BY US. UNDER NO CIRCUMSTANCES, INCLUDING ANY CLAIMS FOR NEGLIGENCE, SHALL WASTE TECH BE LIABLE FOR ANY INCIDENTAL OR CONSEQUENTIAL DAMAGES, COSTS OF INSTALLING OR CONNECTING OR REMOVING OR DISCONNECTING, OR ANY LOSS OR DAMAGES RESULTING FROM A DEFECT IN THE PRODUCT OR PARTS.

WASTE TECH WILL NOT ACCEPT ANY CHARGES FOR MODIFICATIONS, SERVICING, REPAIR, ADJUSTMENT, OR ANY OTHER ITEM WITHOUT AUTHORITY IN THE FORM OF A WRITTEN ORDER ISSUED BY US IN ADVANCE OF DOING THE WORK.

LIMIT OF LIABILITY: WASTE TECH'S TOTAL LIABILITY UNDER THIS ABOVE WARRANTY IS LIMITED TO THE REPAIR OR REPLACEMENT OF ANY DEFECTIVE PART.

SPECIAL WARRANTY LIMITATION NOTE: UNDER NO CIRCUMSTANCES WILL WASTE TECH ASSUME ANY LIABILITY OR REPAIR RESPONSIBILITY FOR PARTS, MATERIAL OR PRODUCTS PLACED INTO SERVICE AND OPERATED AFTER START-UP PRIOR TO OWNER ACCEPTANCE, UNLESS EXPRESSLY AGREED BY US IN WRITING. THE ACT OF PLACING WASTE TECH PARTS, MATERIAL OR PRODUCTS INTO SERVICE PRIOR TO PAYMENT OF OUR INVOICES FOR THE SAME AND WITHOUT OWNER'S ACCEPTANCE, WILL WITHOUT EXCEPTION VOID THE WARRANTY RESPONSIBILITY OF WASTE TECH.

WASTE▪TECH
a division of KUSTERS ZIMA

1.6

PAINTING SPECIFICATIONS

OPERATION & MAINTENANCE

WENATCHEE WWTP IMPROVEMENTS
PROJECT PO913
WENATCHEE, WA

SECTION 11092 – PERFORATED PLATE SCREENS
SECTION 11095 – SCREENINGS WASHER COMPACTOR

PAINTING SPECIFICATION

The following pages contain the Tnemec paint system specification, which is used on the Compactor screw. Stainless steel and other corrosion resistant surfaces will not be painted. Stainless Steel Assemblies are glass blasted per SSPC-SP10 for passivation after fabrication to completely treat the assemblies.

Auxiliary components such as gear motors, etc. will be supplied with the manufacturer's standard Severe-Duty Oil-Resistant Enamel coating.

The assemblies are shotblasted to a near white metal finish per SSPC-SP6 and then given one (1) coat of Tnemec Series 90-97 to a 3.5 mil dry film thickness.

TNEMEC

PRODUCT DATA SHEET

TNEME-ZINC 90-97 & H90-97

PRODUCT PROFILE

GENERIC DESCRIPTION Aromatic Urethane, Zinc-Rich

COMMON USAGE An advanced technology, two-component, moisture-cured, zinc-rich primer providing extraordinary performance. It's user friendly and rapid curing so chemical- and corrosion-resistant topcoats can be applied the "same-day." Also used for field touch-up of inorganic zinc coating. Application methods, for 90-97 only, include "dry-fall" under certain conditions (see Application). H90-97 is HAPS compliant for use in-shop.

COLORS 90-97 Reddish-gray

ZINC DUST CONTENT 83% by weight in dried film

SPECIAL QUALIFICATIONS Series 90-97/H90-97 meets **AISC** requirements of Class B surface with a mean slip coefficient no less than 0.50 and a tension creep no in excess of .005 inches (.13mm).
Tneme-Zinc uses a zinc dust which meets the requirements of **ASTM D 520 Type III** and contains less than .002% lead. This level qualifies it to be classed as "non-lead" (less than 0.06% lead by weight) as defined in Part 1303 of the Consumer Product Safety Act Regulations. Conforms to **SSPC Paint 20, Type II.**

PERFORMANCE CRITERIA Extensive test data available. Contact your Tnemec representative for specific test results.

COATING SYSTEM

TOPCOATS Series 1, 6, 27, 46H-413, 66, L69, L69F, N69, N69F, V69, V69F, 73, 104, 113, 114, 115, 135, 161, 394, 1028, 1029, 1074, 1074U, 1075, 1075U
Note: Certain topcoat colors may not provide one-coat hiding depending on method of application. Contact your Tnemec representative. **Note:** Series 90-97 or H90-97 must be exterior exposed for three days prior to topcoating with Series 1028 or 1029.

SURFACE PREPARATION

Severe Exposure: SSPC-SP10/NACE 2 Near-White Blast Cleaning with a minimum angular anchor profile of 1.5 mils.
Moderate Exposure: SSPC-SP6/NACE 3 Commercial Blast Cleaning with a minimum angular anchor profile of 1.5 mils.

TECHNICAL DATA

VOLUME SOLIDS 63.0 ± 2.0% (mixed)

RECOMMENDED DFT 2.5 to 3.5 mils (65 to 90 microns) per coat.

CURING TIME Without 44-710

Temperature †	To Handle	To Recoat
75°F (24°C)	1 hour	4 hours
65°F (18°C)	1 1/2 hours	5 hours
55°F (11°C)	2 hours	6 hours
45°F (7°C)	2 1/2 hours	7 hours
35°F (2°C)	3 hours	8 hours

† 50% relative humidity. Curing time will vary with surface temperature, humidity and film thickness.
With 44-710: Reference the 44-710 Urethane Accelerator product data sheet.

VOLATILE ORGANIC COMPOUNDS

	Unthinned	Thinned 2.5% (No. 2 or 3 Thinner)	Thinned 10% (No. 2 or 3 Thinner)	Thinned 15% (No. 62 Thinner)
90-97	2.68 lbs/gallon (321 grams/litre)	2.79 lbs/gallon (334 grams/litre)	3.10 lbs/gallon (371 grams/litre)	
H90-97	2.83 lbs/gallon (339 grams/litre)			2.83 lbs/gallon (339 grams/litre)

HAPS

	Unthinned	Thinned 15% (No. 62 Thinner)
H90-97	0.02 lbs/gals solids	0.02 lbs/gals solids

THEORETICAL COVERAGE 1,011 mil sq ft/gal (24.8 m²/L at 25 microns). See APPLICATION for coverage rates.

NUMBER OF COMPONENTS Two: Part A and Part B

PACKAGING Four-Gallon and One-Gallon Kits: Consist of one premeasured container of liquid (Part A) and one premeasured container of powder (Part B). When mixed, yields four gallons (15.1L) or one gallon (3.79L).

NET WEIGHT PER GALLON 23.94 ± 0.60 lbs (10.86 ± .27 kg)

STORAGE TEMPERATURE Minimum 20°F (-7°C) Maximum 110°F (43°C)

TEMPERATURE RESISTANCE Dry (Continuous) 250°F (121°C) Intermittent 300°F (149°C)

SHELF LIFE Part A: 12 months at recommended storage temperature.
Part B: 24 months at recommended storage temperature.

FLASH POINT - SETA 90-97 Part A: 78°F (26°C) H90-97 Part A: 108°F (42°C) Part B: N/A

HEALTH & SAFETY Paint products contain chemical ingredients which are considered hazardous. Read container label warning and Material Safety Data Sheet for important health and safety information prior to the use of this product.
Keep out of the reach of children.

© 10/30/2008, by Tnemec Co., Inc. Published technical data and instructions are subject to change without notice. The online catalog at www.tnemec.com should be referenced for the most current technical data and instructions or you may contact your Tnemec representative for current technical data and instructions.

TNEME-ZINC | 90-97 & H90-97

APPLICATION

COVERAGE RATES

	Dry Mils (Microns)	Wet Mils (Microns)	Sq Ft/Gal (m²/Gal)
Suggested	3.0 (75)	5.0 (125)	337 (31.3)
Minimum	2.5 (65)	4.0 (100)	404 (37.5)
Maximum	3.5 (90)	5.5 (140)	289 (26.9)

Allow for overspray and surface irregularities. Film thickness is rounded to the nearest 0.5 mil or 5 microns. Application of coating below minimum or above maximum recommended dry film thicknesses may adversely affect coating performance.

MIXING

Always use the entire contents of A and B components. Use an air-driven power mixer and keep material under constant agitation while mixing. Slowly sift powder (Part B) into liquid (Part A).
–Do Not Reverse This Procedure– Adjust mixer speed to break up lumps and mix until the two components are thoroughly blended. Strain through a 35 to 50 mesh (300 to 600 microns) screen before using. For spray application, keep under low RPM agitation to prevent settling. For brush or roller application, stir frequently to prevent settling. Do not use mixed material beyond pot life limits.

THINNING

90-97: For spray, thin up to 10% or 3/4 pint (380 mL) per gallon with No. 2 Thinner if temperatures are below 80°F (27°C). Thin up to 10% or 3/4 pint (380 mL) per gallon with No. 3 Thinner if temperatures are above 80°F (27°C). For brush or roller, thin up to 10% or 3/4 pint (380 mL) with No. 3 Thinner.
H90-97: For air spray, thin up to 15% per gallon with No. 62 Thinner. For airless spray, brush or roller, thin up to 10% per gallon with No. 62 Thinner.

POT LIFE

8 hours at 77°F (25°C) and 50% R.H.
Caution: This product cures with moisture acting as a catalyst. Incorporation of moisture or moisture laden air (humidity) during use will shorten pot life. Avoid continual agitation at high RPM. When feasible keep containers of mixed material covered during use.

APPLICATION EQUIPMENT

Note: When finish coats are white or light colors, best hiding of this dark color primer can be achieved by spray application.

Air Spray

Gun	Fluid Tip	Air Cap	Air Hose ID	Mat'l Hose ID	Atomizing Pressure (1)	Pot Pressure
DeVilbiss JGA †	E	765 or 704	5/16" or 3/8" (7.9 or 9.5 mm)	3/8" or 1/2" (9.5 or 12.7 mm)	40-50 psi (2.8-3.4 bar)	10-20 psi (0.7-1.4 bar)

(1) Atomizing Pressure for H090-97 is 50-70 psi (3.4-4.8 bar).
† (with heavy mastic spring) Low temperatures or longer hoses will require additional pressure. Use pressure pot equipped with an agitator and keep pressure pot at same level or higher than the spray gun. Compressed air must be dry.

Airless Spray

Tip Orifice	Atomizing Pressure (2)	Mat'l Hose ID	Manifold Filter
0.017"-0.021" (430-535 microns) Reversible Tip	2400-3000 psi (165-207 bar)	1/4" or 3/8" (6.4 or 9.5 mm)	60 mesh (250 microns)

(2) Atomizing Pressure for H090-97 is 3500-4500 (241-310 bar).
Use appropriate tip/atomizing pressure for equipment, applicator technique and weather conditions.
Keep material agitated to prevent settling.
Roller: Use 1/4" or 3/8" (6.4 mm or 9.5 mm) synthetic woven nap roller covers. Stir material frequently or keep under agitation to prevent settling.
Brush: Use high quality natural or synthetic bristle brushes.

SURFACE TEMPERATURE

Minimum 35°F (2°C) Maximum 120°F (49°C) Maximum for Brush & Roller 100°F (38°C)
The surface should be dry and at least 5°F (3°C) above the dew point.

AMBIENT HUMIDITY

Minimum 40% Maximum 90%

CLEANUP

Flush and clean all equipment immediately after use with the recommended thinner or xylene.

CAUTION!

Dry overspray can be wiped or washed from most surfaces. Satisfactory dry-fall performance depends upon height of work, weather conditions and equipment adjustment. Low temperature is of particular concern. Test for each application as follows: Spray from 15 to 25 feet towards paint container. The material then should readily wipe off. **Note:** Heat can fuse-dry overspray to surfaces. Always clean dry overspray from hot surfaces before fusing occurs. Be aware that surface temperatures can be higher than air temperatures.

WARRANTY & LIMITATION OF SELLER'S LIABILITY: Tnemec Company, Inc. warrants only that its coatings represented herein meet the formulation standards of Tnemec Company, Inc. THE WARRANTY DESCRIBED IN THE ABOVE PARAGRAPH SHALL BE IN LIEU OF ANY OTHER WARRANTY, EXPRESSED OR IMPLIED, INCLUDING BUT NOT LIMITED TO, ANY IMPLIED WARRANTY OF MERCHANTABILITY OR FITNESS FOR A PARTICULAR PURPOSE. THERE ARE NO WARRANTIES THAT EXTEND BEYOND THE DESCRIPTION ON THE FACE HEREOF. The buyer's sole and exclusive remedy against Tnemec Company, Inc. shall be for replacement of the product in the event a defective condition of the product should be found to exist and the exclusive remedy shall not have failed its essential purpose as long as Tnemec is willing to provide comparable replacement product to the buyer. NO OTHER REMEDY (INCLUDING, BUT NOT LIMITED TO, INCIDENTAL OR CONSEQUENTIAL DAMAGES FOR LOST PROFITS, LOST SALES, INJURY TO PERSON OR PROPERTY, ENVIRONMENTAL INJURIES OR ANY OTHER INCIDENTAL OR CONSEQUENTIAL LOSS) SHALL BE AVAILABLE TO THE BUYER. Technical and application information herein is provided for the purpose of establishing a general profile of the coating and proper coating application procedures. Test performance results were obtained in a controlled environment and Tnemec Company makes no claim that these tests or any other tests, accurately represent all environments. As application, environmental and design factors can vary significantly, due care should be exercised in the selection and use of the coating.

Tnemec Company Incorporated 6800 Corporate Drive Kansas City, Missouri 64120-1372 1-800-TNEMEC1 Fax: 1-816-483-3969 www.tnemec.com

© 10/30/2008, by Tnemec Co., Inc.

Material Safety Data Sheet

Print Date 14-Feb-2012 **Revision Date** 14-Feb-2012 **Revision Number** 3

1. PRODUCT AND COMPANY IDENTIFICATION

Common name	SERIES 90-97 PART A
Product code	F090-0097A
Trade name	TNEME-ZINC REDDISH GRAY
Product Class	POLYMERIC DIISOCYANATE PAINT
Manufacturer	Tnemec Company, Inc. 6800 Corporate Drive, Kansas City, MO 64120-1372
Emergency telephone	800-535-5053 (INFOTRAC) - TNEMEC REGULATORY DEPT: 816-474-3400

2. HAZARDS IDENTIFICATION

Emergency Overview

DANGER!

FLAMMABLE LIQUID AND VAPOR
HARMFUL IF INHALED
MAY CAUSE LUNG INJURY
MAY CAUSE ALLERGIC RESPIRATORY REACTION; EFFECTS MAY BE PERMANENT
MAY CAUSE ALLERGIC SKIN REACTION; EFFECTS MAY BE PERMANENT
HARMFUL OR FATAL IF SWALLOWED
MAY AFFECT THE BRAIN OR NERVOUS SYSTEM CAUSING DIZZINESS, HEADACHE OR NAUSEA
MAY CAUSE EYE, SKIN, NOSE, THROAT AND RESPIRATORY TRACT IRRITATION.

Potential health effects

Principle Routes of Exposure Eye contact, Inhalation, Skin contact.

Acute effects

Eyes	Moderately irritating to the eyes. Risk of serious damage to eyes.
Skin	Irritating to skin. May cause sensitization by skin contact.
Inhalation	Irritating to respiratory system. May cause allergic respiratory reaction. Respirable crystalline silica (quartz) can cause silicosis, a fibrosis (scarring) of the lungs.
Ingestion	May be harmful if swallowed.

Chronic effects

NOTICE: Reports have associated repeated and prolonged occupational overexposure to solvents with permanent brain and nervous system damage. Intentional misuse by deliberately concentrating and inhaling the contents may be harmful or fatal. Cancer hazard. Contains crystalline silica which can cause cancer. (Risk of cancer depends on duration and level of exposure).

See Section 11 for additional Toxicological information.

Aggravated Medical Conditions Central nervous system. Gastrointestinal tract. Liver disorders. Skin disorders. Respiratory disorders. Kidney disorders.

Interactive effects Use of alcoholic beverages may enhance toxic effects.

Potential environmental effects See Section 12 for additional Ecological Information.

Target Organ Effects Central nervous system, Gastrointestinal tract, Eyes, Liver, Lungs, Respiratory system, Skin, Blood, Kidney

3. COMPOSITION/INFORMATION ON INGREDIENTS

Hazardous Components

Component	CAS-No	Weight %
DIPHENYLMETHANE DIISOCYANATE (MDI) POLYMER	-	30 - 60
XYLENE	1330-20-7	30 - 60
DIPHENYLMETHANE DIISOCYANATE (MDI) REACTIVE MONOMER	101-68-8	5 - 10
ETHYL BENZENE	100-41-4	5 - 10
MICA (RESPIRABLE DUST)	12001-26-2	1 - 5
CRYSTALLINE SILICA (QUARTZ)	14808-60-7	1 - 5
IRON OXIDE FUME	1309-37-1	1 - 5
AMORPHOUS SILICA	7631-86-9	1 - 5
CRYSTALLINE SILICA (QUARTZ)	14808-60-7	0.1 - 1

4. FIRST AID MEASURES

Eye contact: Rinse thoroughly with plenty of water for at least 15 minutes.

Skin contact: Wash off immediately with soap and plenty of water.

Ingestion: If swallowed, do not induce vomiting. Get medical attention immediately.

Inhalation: Move to fresh air. Oxygen or artificial respiration if needed. If inhaled, remove to fresh air. If not breathing, give artificial respiration. If breathing is difficult, give oxygen. Get medical attention immediately.

5. FIRE-FIGHTING MEASURES

Flammable properties Flammable.

Suitable extinguishing media Use extinguishing measures that are appropriate to local circumstances and the surrounding environment. Contact with water may cause violent frothing. Use: Carbon dioxide (CO_2) - Foam - Dry chemical

Hazardous decomposition products Oxides of carbon, hydrocarbons. Oxides of nitrogen. Hydrogen cyanide. Isocyanates.

Specific hazards arising from the chemical
Thermal decomposition can lead to release of irritating gases and vapours. In the event of fire and/or explosion do not breathe fumes.

Protective equipment and precautions for firefighters
Use water spray to cool unopened containers. In the event of fire, wear self-contained breathing apparatus. Keep away from heat/sparks/open flames/hot surfaces. May cause heat and pressure build-up in closed containers. Solvent vapors are heavier than air and may spread along floors. Flash back possible over considerable distance.

6. ACCIDENTAL RELEASE MEASURES

Personal precautions Avoid contact with skin, eyes and clothing. Use personal protective equipment. Remove all sources of ignition.

Environmental precautions Prevent further leakage or spillage if safe to do so. Do not flush into surface water or sanitary sewer system.

Methods for cleaning up If spilled, contain spilled material and remove with inert absorbent. Dispose of contaminated absorbent, container and unused contents in accordance with local, state and federal regulations.

Other information Not applicable

7. HANDLING AND STORAGE

Handling

Use only with adequate ventilation. Avoid contact with skin, eyes and clothing. Handle in accordance with good industrial hygiene and safety practice. Remove and wash contaminated clothing before re-use. Do not eat, drink or smoke when using this product. When used in a mixture, read the labels and safety data sheets of all components. Wash thoroughly after handling.

Storage

Close container after each use. Keep away from heat, sparks and flame. VAPORS MAY CAUSE FLASH FIRE. Use only in an area containing flame proof equipment. Extinguish all flames and pilot lights, and turn off stoves, heaters, electric motors and other sources of ignition during use and until all vapors are gone. Prevent build-up of vapors by opening all windows and doors to achieve cross ventilation.

8. EXPOSURE CONTROLS / PERSONAL PROTECTION

Exposure Guidelines

Component	ACGIH TLV	OSHA PEL	Quebec TWAEV	Ontario TWAEV	Mexico OEL (TWA)
XYLENE	TWA: 100 ppm STEL: 150 ppm	TWA: 100 ppm TWA: 435 mg/m³ STEL: 150 ppm STEL: 655 mg/m³	TWA: 100 ppm TWA: 434 mg/m³ STEL: 150 ppm STEL: 651 mg/m³	TWA: 100 ppm STEL: 150 ppm	TWA: 100 ppm TWA: 435 mg/m³ STEL: 150 ppm STEL: 655 mg/m³
DIPHENYLMETHANE DIISOCYANATE (MDI) REACTIVE MONOMER	TWA: 0.005 ppm	Ceiling: 0.02 ppm Ceiling: 0.2 mg/m³	TWA: 0.005 ppm TWA: 0.051 mg/m³	TWA: 0.005 ppm CEV: 0.02 ppm	TWA: 0.02 ppm TWA: 0.2 mg/m³ TWA: 0.005 ppm TWA: 0.051 mg/m³
ETHYL BENZENE	TWA: 20 ppm	TWA: 100 ppm TWA: 435 mg/m³ STEL: 125 ppm STEL: 545 mg/m³	TWA: 100 ppm TWA: 434 mg/m³ STEL: 125 ppm STEL: 543 mg/m³	TWA: 100 ppm STEL: 125 ppm	TWA: 100 ppm TWA: 435 mg/m³ STEL: 125 ppm STEL: 545 mg/m³
MICA (RESPIRABLE DUST)	TWA: 3 mg/m³	TWA: 3 mg/m³	TWA: 3 mg/m³	TWA: 3 mg/m³	TWA: 3 mg/m³
CRYSTALLINE SILICA (QUARTZ)	TWA: 0.025 mg/m³	TWA: 0.1 mg/m³	TWA: 0.1 mg/m³	TWA: 0.10 mg/m³	TWA: 0.1 mg/m³
IRON OXIDE FUME	TWA: 5 mg/m³	TWA: 10 mg/m³	TWA: 5 mg/m³	TWA: 5 mg/m³	TWA: 5 mg/m³ STEL: 10 mg/m³
AMORPHOUS SILICA		TWA: 6 mg/m³			
CRYSTALLINE SILICA (QUARTZ)	TWA: 0.025 mg/m³	TWA: 0.1 mg/m³	TWA: 0.1 mg/m³	TWA: 0.10 mg/m³	TWA: 0.1 mg/m³

Engineering measures Ensure adequate ventilation, especially in confined areas

Personal Protective Equipment

Skin protection Lightweight protective clothing, Apron, Impervious gloves

Eye/face protection Safety glasses with side-shields

Respiratory protection INDIVIDUALS WITH LUNG OR BREATHING PROBLEMS OR PRIOR REACTION TO ISOCYANATES MUST NOT BE EXPOSED TO VAPOR OR SPRAY MIST. Do not breathe vapor or spray mist. Wear an appropriate, properly fitted respirator (NIOSH/MSHA approved) during and after application unless air monitoring demonstrates vapor/mist levels are below applicable limits. An airline respirator (TC 19C NIOSH/MSHA) is recommended. A vapor-particulate respirator (TC 23C NIOSH/MSHA) may be appropriate where air monitoring demonstrates vapors are less than ten times the applicable exposure limits and the isocyanate concentration is less than its applicable exposure limit. The use of an air-supplied respirator is mandatory whenever the airborne concentration of isocyanate monomer is unknown.

General hygiene considerations Handle in accordance with good industrial hygiene and safety practice. Avoid breathing dust created by cutting, sanding, or grinding.

9. PHYSICAL AND CHEMICAL PROPERTIES

Flash point	26 °C / 78.0 °F
Boiling range	135 - 142.000 °C / 275.0 - 288.0 °F
Upper explosion limit	No information available
Lower explosion limit	No information available
Evaporation rate	No information available
Vapor pressure	No information available
Vapor density	No information available
Specific Gravity	1.07993 g/cm3
Density	8.98663 lbs/gal
Volatile organic compounds (VOC) content	3.827 lbs/gal
Volatile by weight	42.5790 %
Volatile by volume	52.7651 %

10. STABILITY AND REACTIVITY

Chemical stability Stable.

Incompatible products Strong oxidizing agents. Water, alcohols, amines, strong bases, metal components, surface active materials. Acids.

Conditions to avoid Heat, flames and sparks. Amines.

Possibility of hazardous reactions None under normal processing

11. TOXICOLOGICAL INFORMATION

Acute toxicity

Component Information

Component	LD50 Oral	LD50 Dermal	LC50 Inhalation
DIPHENYLMETHANE DIISOCYANATE (MDI) POLYMER			490 mg/m³, 4h (rat)
XYLENE	4300 mg/kg (Rat)	1700 mg/kg (Rabbit)	47635 mg/L (Rat) 4 h 5000 ppm (Rat) 4 h
DIPHENYLMETHANE DIISOCYANATE (MDI) REACTIVE MONOMER	9200 mg/kg (Rat)		
ETHYL BENZENE	3500 mg/kg (Rat)	15354 mg/kg (Rabbit)	17.2 mg/L (Rat) 4 h
CRYSTALLINE SILICA (QUARTZ)	500 mg/kg (Rat)		
IRON OXIDE FUME	10000 mg/kg (Rat)		
AMORPHOUS SILICA	5000 mg/kg (Rat)	2000 mg/kg (Rabbit)	2.2 mg/L (Rat) 1 h
CRYSTALLINE SILICA (QUARTZ)	500 mg/kg (Rat)		

Irritation No information available
Corrosivity No information available.
Sensitization No information available.

Chronic toxicity
Carcinogenicity The table below indicates whether each agency has listed any ingredient as a carcinogen.

Component	ACGIH	IARC	NTP	OSHA	Mexico
ETHYL BENZENE	A3	Group 2B		X	
CRYSTALLINE SILICA (QUARTZ)	A2	Group 1	Known	X	
CRYSTALLINE SILICA (QUARTZ)	A2	Group 1	Known	X	

Mutegenicity No information available.
Reproductive effects No information available.
Developmental effects No information available.
Teratogenicity No information available.
Target Organ Effects Central nervous system, Gastrointestinal tract, Eyes, Liver, Lungs, Respiratory system, Skin, Blood, Kidney.
Endocrine Disruptor Information No information available

12. ECOLOGICAL INFORMATION

Ecotoxicity

Component	Toxicity to algae	Toxicity to fish	Toxicity to microorganisms	Toxicity to daphnia
XYLENE		LC50 13.1 - 16.5 mg/L Lepomis macrochirus 96 h LC50 13.5 - 17.3 mg/L Oncorhynchus mykiss 96 h LC50 2.661 - 4.093 mg/L Oncorhynchus mykiss 96 h LC50 23.53 - 29.97 mg/L Pimephales promelas 96 h LC50 30.26 - 40.75 mg/L Poecilia reticulata 96 h LC50 7.711 - 9.591 mg/L Lepomis macrochirus 96 h LC50= 13.4 mg/L Pimephales promelas 96 h LC50= 19 mg/L Lepomis macrochirus 96 h LC50= 780 mg/L Cyprinus carpio 96 h LC50> 780 mg/L Cyprinus carpio 96 h	EC50 = 0.0084 mg/L 24 h	LC50 = 0.6 mg/L 48 h EC50 = 3.82 mg/L 48 h
ETHYL BENZENE	EC50 = 4.6 mg/L 72 h EC50 > 438 mg/L 96 h EC50 2.6 - 11.3 mg/L 72 h EC50 1.7 - 7.6 mg/L 96 h	LC50 11.0 - 18.0 mg/L Oncorhynchus mykiss 96 h LC50 7.55 - 11 mg/L Pimephales promelas 96 h LC50 9.1 - 15.6 mg/L Pimephales promelas 96 h LC50= 32 mg/L Lepomis macrochirus 96 h LC50= 4.2 mg/L Oncorhynchus mykiss 96 h LC50= 9.6 mg/L Poecilia reticulata 96 h	EC50 = 9.68 mg/L 30 min EC50 = 96 mg/L 24 h	EC50 1.8 - 2.4 mg/L 48 h
AMORPHOUS SILICA	EC50 = 440 mg/L 72 h	LC50= 5000 mg/L Brachydanio rerio 96 h		EC50 = 7600 mg/L 48 h

13. DISPOSAL CONSIDERATIONS

Waste disposal methods Keep container tightly closed. If spilled, contain spilled material and remove with inert absorbent. Dispose of contaminated absorbent, container and unused contents in accordance with local, state and federal regulations.

Contaminated packaging Empty containers should be taken for local recycling, recovery or waste disposal.

14. TRANSPORT INFORMATION

DOT Ground Transportation Only. Call TNEMEC Traffic Department - 816-474-3400 for other modes of Transportation.

Proper shipping name UN1263,PAINT,3,PGIII,ERG 128

15. REGULATORY INFORMATION

International Inventories

TSCA	Complies
DSL/NDSL	Complies
EINECS/ELINCS	Does not Comply
CHINA	Complies
ENCS	Does not Comply
KECL	Complies
PICCS	Does not Comply
AICS	Complies

The following chemical(s) are listed as HAP under the U.S. Clean Air Act, Section 12 (40 CFR 61):

Component	HAPS Data
XYLENE	
DIPHENYLMETHANE DIISOCYANATE (MDI) REACTIVE MONOMER	
ETHYL BENZENE	

United States of America Federal Regulations

SARA 313

Component	CAS-No	Weight %	SARA 313 - Threshold Values
XYLENE	1330-20-7	30 - 60	1.0
DIPHENYLMETHANE DIISOCYANATE (MDI) REACTIVE MONOMER	101-68-8	5 - 10	1.0
ETHYL BENZENE	100-41-4	5 - 10	0.1

SARA 311/312 Hazardous Categorization

Chronic Health Hazard	yes
Acute Health Hazard	yes
Fire Hazard	yes
Sudden Release of Pressure Hazard	no
Reactive Hazard	no

Component	CWA - Reportable Quantities	CWA - Toxic Pollutants	CWA - Priority Pollutants	CWA - Hazardous Substances

XYLENE 1330-20-7 (30 - 60)	100 lb			X
ETHYL BENZENE 100-41-4 (5 - 10)	1000 lb	X	X	X

CERCLA

Component	Hazardous Substances RQs	CERCLA EHS RQs
XYLENE	100 lb	
DIPHENYLMETHANE DIISOCYANATE (MDI) REACTIVE MONOMER	5000 lb	
ETHYL BENZENE	1000 lb	

United States of America State Regulations

California Prop. 65
This product contains the following Proposition 65 chemicals:

Component	CAS-No	California Prop. 65
ETHYL BENZENE	100-41-4	Carcinogen
CRYSTALLINE SILICA (QUARTZ)	14808-60-7	Carcinogen
CRYSTALLINE SILICA (QUARTZ)	14808-60-7	Carcinogen

State Right-to-Know

Component	Massachusetts	New Jersey	Pennsylvania	Illinois	Rhode Island
XYLENE	X	X	X	X	
DIPHENYLMETHANE DIISOCYANATE (MDI) REACTIVE MONOMER	X	X	X	X	
ETHYL BENZENE	X	X	X	X	
MICA (RESPIRABLE DUST)	X	X	X		
CRYSTALLINE SILICA (QUARTZ)	X	X	X		
IRON OXIDE FUME	X	X	X		
AMORPHOUS SILICA	X	X	X		
CRYSTALLINE SILICA (QUARTZ)	X	X	X		

Other international regulations

Canada

This product has been classified according to the hazard criteria of the CPR and the MSDS contains all of the information required by the CPR.

WHMIS Classification
B2 Flammable liquid
D2A Very toxic materials

Component	NPRI
XYLENE	Part 1, Group 1 Substance; Part 5 Substance
DIPHENYLMETHANE DIISOCYANATE (MDI) REACTIVE MONOMER	Part 1, Group 1 Substance
ETHYL BENZENE	Part 1, Group 1 Substance

Legend
NPRI - National Pollutant Release Inventory

16. OTHER INFORMATION

Revision Date	14-Feb-2012
Revision Note	No information available

HMIS (Hazardous Material Information System)	**Health** 3*	**Flammability** 3	**Reactivity** 2

Disclaimer
For specific information regarding occupational safety and health standards, please refer to the Code of Federal Regulations, Title 29, Part 1910.
To the best of our knowledge, the information contained herein is accurate. However, neither the Tnemec Company or any of its subsidiaries assume any liability whatsoever for the accuracy of completeness of the information contained herein. Final determination of suitability of any material is the sole responsibility of the user. All materials may present unknown health hazards and should be used with caution. Although certain hazards are described herein, we cannot guarantee that these are the only hazards which exist.

End of MSDS

Material Safety Data Sheet

Print Date 18-Apr-2011 **Revision Date** 18-Apr-2011 **Revision Number** 1

1. PRODUCT AND COMPANY IDENTIFICATION

Common name	SERIES 90-97 PART B
Product code	F090-0097B
Trade name	TNEME-ZINC ZINC PIGMENT
Product Class	ZINC METAL PIGMENT
Manufacturer	TNEMEC Company, Inc. 123 West 23rd Avenue North Kansas City, MO 64116-3064 816-474-3400
Emergency telephone	800-535-5053 (INFOTRAC) - TNEMEC REGULATORY DEPT: 816-474-3400

2. HAZARDS IDENTIFICATION

Emergency Overview

WARNING!

HARMFUL BY INHALATION.
MAY CAUSE HEADACHE AND DIZZINESS.
MAY CAUSE FLU-LIKE SYMPTOMS.
MAY CAUSE EYE, SKIN, NOSE, THROAT AND RESPIRATORY TRACT IRRITATION.

Potential health effects

Principle Routes of Exposure Inhalation

Acute effects

Eyes	May cause slight irritation
Skin	Substance may cause slight skin irritation
Inhalation	May cause irritation of respiratory tract. Inhalation of metallic zinc dust may result in symptoms known as metal fume fever. Symptoms include chills, fever, muscular pain, nausea and vomiting.
Ingestion	Gastrointestinal discomfort.

Chronic effects
Avoid repeated exposure.

See Section 11 for additional Toxicological information.

Aggravated Medical Conditions No information available

Interactive effects No information available

Potential environmental effects See Section 12 for additional Ecological Information

Target Organ Effects Respiratory system

3. COMPOSITION/INFORMATION ON INGREDIENTS

Hazardous Components

Component	CAS-No	Weight %
ZINC	7440-66-6	60 - 100
ZINC OXIDE	1314-13-2	1 - 5

4. FIRST AID MEASURES

Eye contact: Rinse thoroughly with plenty of water for at least 15 minutes.

Skin contact: Wash off immediately with soap and plenty of water.

Ingestion: If swallowed, do not induce vomiting. Get medical attention immediately.

Inhalation: Move to fresh air. Oxygen or artificial respiration if needed.

5. FIRE-FIGHTING MEASURES

Flammable properties No information available

Suitable extinguishing media Use extinguishing measures that are appropriate to local circumstances and the surrounding environment. Do NOT use water jet. Use: Carbon dioxide (CO2) - Foam - Dry chemical

Hazardous decomposition products Zinc oxide fume.

Specific hazards arising from the chemical
Thermal decomposition can lead to release of irritating gases and vapours. In the event of fire and/or explosion do not breathe fumes.

Protective equipment and precautions for firefighters
As in any fire, wear self-contained breathing apparatus pressure-demand, MSHA/NIOSH (approved or equivalent) and full protective gear.

6. ACCIDENTAL RELEASE MEASURES

Personal precautions Avoid contact with skin, eyes and clothing. Use personal protective equipment. Remove all sources of ignition.

Environmental precautions Prevent further leakage or spillage if safe to do so. Do not flush into surface water or sanitary sewer system.

Methods for cleaning up Shovel or sweep up.

Other information Not applicable

7. HANDLING AND STORAGE

Handling
Close container after each use. Avoid contact with skin, eyes and clothing. Do not eat, drink or smoke when using this product. Tightly fitting safety goggles. Wear protective gloves/clothing. When used in a mixture, read the labels and safety data sheets of all components. Wash thoroughly after handling.

Storage
Keep away from heat, sparks and flame. Keep in a dry place. Keep container tightly closed.

8. EXPOSURE CONTROLS / PERSONAL PROTECTION

Component	ACGIH TLV	OSHA PEL	Quebec TWAEV	Ontario TWAEV	Mexico OEL (TWA)
ZINC OXIDE	: 2 mg/m^3 TWA (respirable fraction) : 10 mg/m^3 STEL (respirable fraction)	: 5 mg/m^3 TWA (fume); 10 mg/m^3 TWA (total dust); 5 mg/m^3 TWA (respirable fraction) : 10 mg/m^3 STEL (fume) : 5 mg/m^3 TWA (fume); 15 mg/m^3 TWA (total dust); 5 mg/m^3 TWA (respirable fraction)	TWA: 5 mg/m^3 TWAEV (fume); 10 mg/m^3 TWAEV (total dust, containing no asbestos and less than 1% crystalline silica) STEL: 10 mg/m^3 STEV (fume)	TWA: 2 mg/m^3 TWA (respirable) STEL: 10 mg/m^3 STEL (respirable)	: 5 mg/m^3 TWA (fume); 10 mg/m^3 TWA (dust) : 10 mg/m^3 STEL (fume)

Engineering measures Ensure adequate ventilation, especially in confined areas

Personal Protective Equipment

Skin protection Lightweight protective clothing, Apron, Impervious gloves

Eye/face protection Tightly fitting safety goggles

Respiratory protection **Use only with adequate ventilation.** Do not breathe dust, vapors or spray mist. Ensure fresh air entry during application and drying. If you experience eye watering, headache or dizziness or if air monitoring demonstrates vapor/mist levels are above applicable limits, wear an appropriate, properly fitted respirator (NIOSH approved) during and after application. Follow respirator manufacturer's directions for respirator use.

General hygiene considerations Handle in accordance with good industrial hygiene and safety practice. Avoid breathing dust created by cutting, sanding, or grinding.

9. PHYSICAL AND CHEMICAL PROPERTIES

Flash point	Not applicable
Boiling range	No information available
Upper explosion limit	No information available
Lower explosion limit	No information available
Evaporation rate	No information available
Vapor pressure	No information available
Vapor density	No information available
Specific Gravity	7.06595 g/cm3
Density	58.79932 lbs/gal
Volatile organic compounds (VOC) content	.000 lbs/gal
Volatile by weight	.0000 %
Volatile by volume	.0000 %

10. STABILITY AND REACTIVITY

Chemical stability Stable.

Conditions to avoid Heat, flames and sparks.

Incompatible products Strong oxidizing agents. Bases. Acids. Water. Product may release hydrogen.

Possibility of hazardous reactions None under normal processing

11. TOXICOLOGICAL INFORMATION

Acute toxicity

11. TOXICOLOGICAL INFORMATION

Component Information

Component	LD50 Oral	LD50 Dermal	LC50 Inhalation
ZINC OXIDE	5000 mg/kg (Rat)		

Irritation No information available
Corrosivity No information available
Sensitization No information available

Chronic toxicity

Carcinogenicity The table below indicates whether each agency has listed any ingredient as a carcinogen

Mutegenicity No information available
Reproductive effects No information available
Developmental effects No information available
Teratogenicity No information available
Target Organ Effects Respiratory system.
Endocrine Disruptor Information No information available

12. ECOLOGICAL INFORMATION

Ecotoxicity

.

Component	Toxicity to algae	Toxicity to fish	Toxicity to microorganisms	Toxicity to daphnia
ZINC	EC50 0.11 - 0.271 mg/L 96 h EC50 0.09 - 0.125 mg/L 72 h	LC50 0.211-0.269 mg/L Pimephales promelas 96 h LC50 2.16-3.05 mg/L Pimephales promelas 96 h LC50= 0.24 mg/L Oncorhynchus mykiss 96 h LC50= 0.41 mg/L Oncorhynchus mykiss 96 h LC50= 0.45 mg/L Cyprinus carpio 96 h LC50= 0.59 mg/L Oncorhynchus mykiss 96 h LC50= 2.66 mg/L Pimephales promelas 96 h LC50= 3.5 mg/L Lepomis macrochirus 96 h LC50= 30 mg/L Cyprinus carpio 96 h LC50= 7.8 mg/L Cyprinus carpio 96 h		EC50 0.139 - 0.908 mg/L 48 h

13. DISPOSAL CONSIDERATIONS

Waste disposal methods Keep container tightly closed. If spilled, contain spilled material and remove with inert absorbent. Dispose of contaminated absorbent, container and unused contents in accordance with local, state and federal regulations.

Contaminated packaging Empty containers should be taken for local recycling, recovery or waste disposal

14. TRANSPORT INFORMATION

DOT Ground Transportation Only. Call TNEMEC Traffic Department - 816-474-3400 for other modes of Transportation.

Proper shipping name ZINC PIGMENT

15. REGULATORY INFORMATION

International Inventories

TSCA	Complies
DSL/NDSL	Complies
EINECS/ELINCS	Complies
CHINA	Complies
ENCS	Does not Comply
KECL	Complies
PICCS	Complies
AICS	Complies

United States of America Federal Regulations

SARA 313

Component	CAS-No	Weight %	SARA 313 - Threshold Values
ZINC	7440-66-6	60 - 100	1.0 % de minimis concentration (Chemical Category N982) 1.0 % de minimis concentration (dust or fume only)
ZINC OXIDE	1314-13-2	1 - 5	1.0

SARA 311/312 Hazardous Categorization

Chronic Health Hazard	no
Acute Health Hazard	yes
Fire Hazard	no
Sudden Release of Pressure Hazard	no
Reactive Hazard	no

Component	CWA - Reportable Quantities	CWA - Toxic Pollutants	CWA - Priority Pollutants	CWA - Hazardous Substances
ZINC		X	X	
ZINC OXIDE		X		

CERCLA

United States of America State Regulations

California Prop. 65
This product contains the following Proposition 65 chemicals:

State Right-to-Know

Component	Massachusetts	New Jersey	Pennsylvania	Illinois	Rhode Island
ZINC	X	X	X		X
ZINC OXIDE	X	X	X		X

Other international regulations

Canada

This product has been classified according to the hazard criteria of the CPR and the MSDS contains all of the information required by the CPR.

WHMIS Classification
Non-controlled

Component	NPRI
ZINC	Part 1, Group 1 Substance

Legend
NPRI - National Pollutant Release Inventory

16. OTHER INFORMATION

Revision Date 18-Apr-2011

Revision Note No information available

HMIS (Hazardous Material Information System) **Health** 2 **Flammability** 1 **Reactivity** 1

Disclaimer
For specific information regarding occupational safety and health standards, please refer to the Code of Federal Regulations, Title 29, Part 1910.
To the best of our knowledge, the information contained herein is accurate. However, neither the Tnemec Company or any of its subsidiaries assume any liability whatsoever for the accuracy of completeness of the information contained herein. Final determination of suitability of any material is the sole responsibility of the user. All materials may present unknown health hazards and should be used with caution. Although certain hazards are described herein, we cannot guarantee that these are the only hazards which exist.

End of MSDS

WASTE▪TECH
a division of KUSTERS ZIMA

1.7

UNLOADING, STORAGE & INSTALLATION INSTRUCTIONS

FILTER SCREEN
STEP BY STEP INSTALLATION INSTRUCTIONS

NOTE: Installation instructions are meant to be a guide only. Check all dimensions prior to installation and verify all parts are available for installation. Do not force fit any parts and do not use the equipment flanges to align equipment. All alignment of equipment is be done with shims. If you have any questions please call (864) 576-0660 and ask for Waste-Tech Service Department.

1. The base frame and pivot bracket anchor bolts (Item 1) should be installed in the correct location on the concrete base or the anchors can be located and installed once the screen is in position. If the later is done the screen may need to be removed to complete the anchor installation. **NOTE: Base Frame anchor bolts are of the flush type**

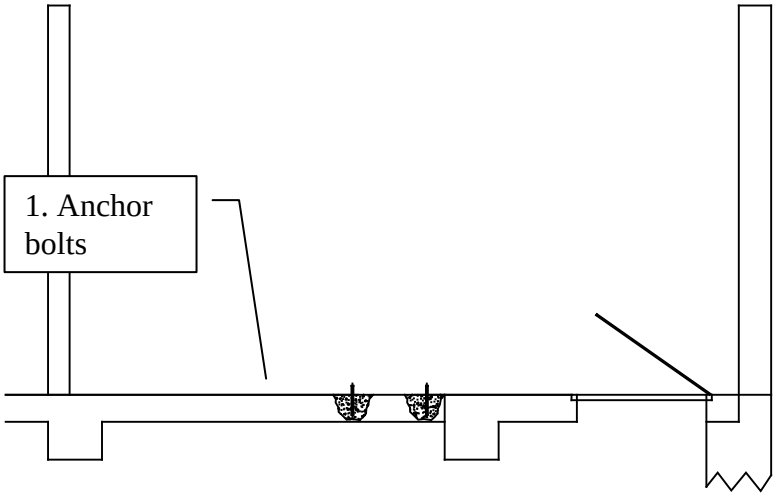

2. The base frame (Item 2) is welded to the screen. The pivot assembly is loose from the base frame and is installed at a later step.
3. With the Screen lying in a horizontal position, attach lifting straps to the top and bottom Lifting Lugs or as needed.

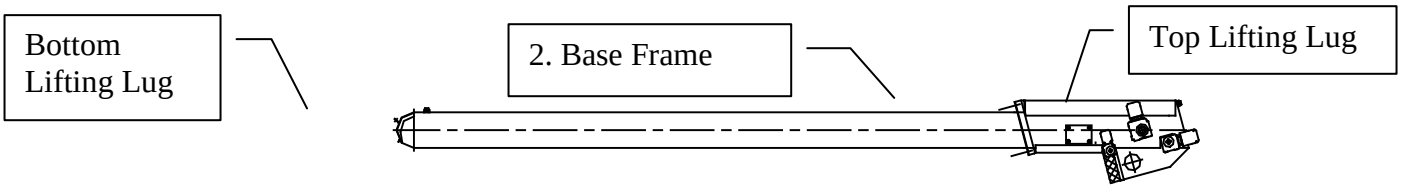

4. The complete unit can now be lifted into a vertical position and lowered through the roof opening (Prior to installing Pre-cast roof panels) and opening in the operating floor. Lower the unit with the base frame located over the flush mount anchor inserts.

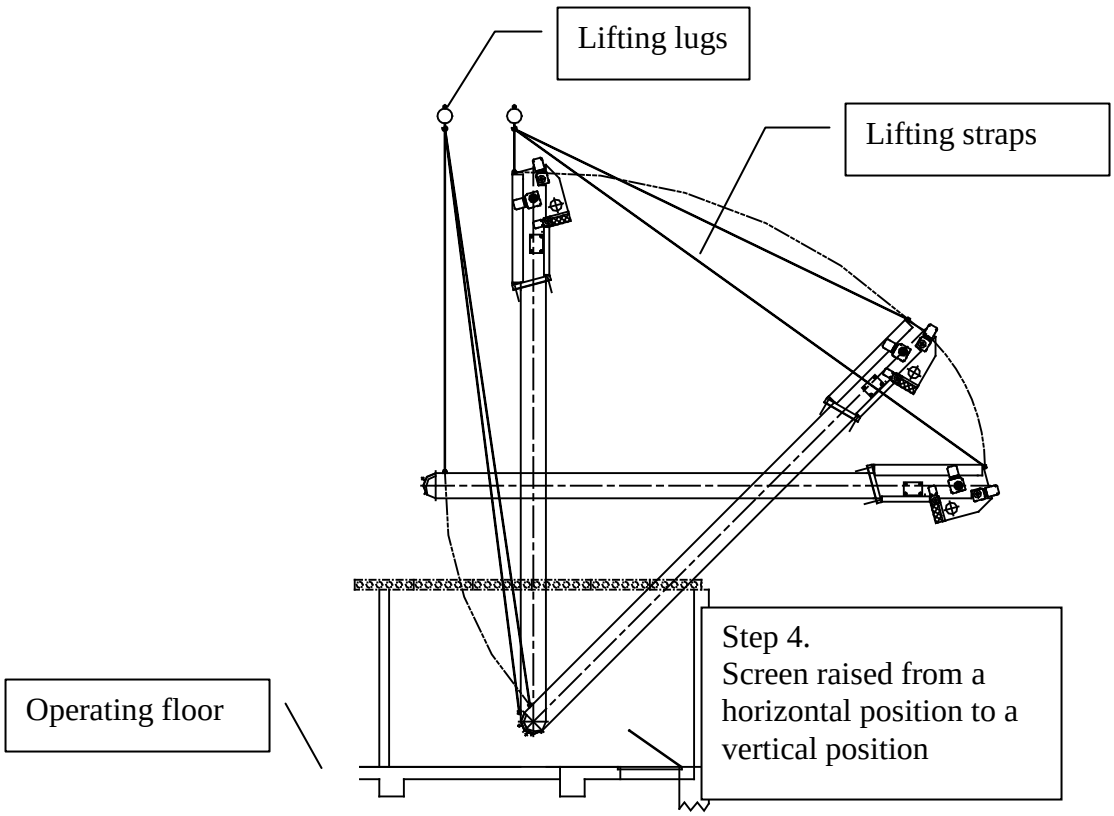

5. Lower the unit with the base frame assembly located on the anchor bolts. Insert bolts into the flush anchor inserts – do not fully tighten at this time.

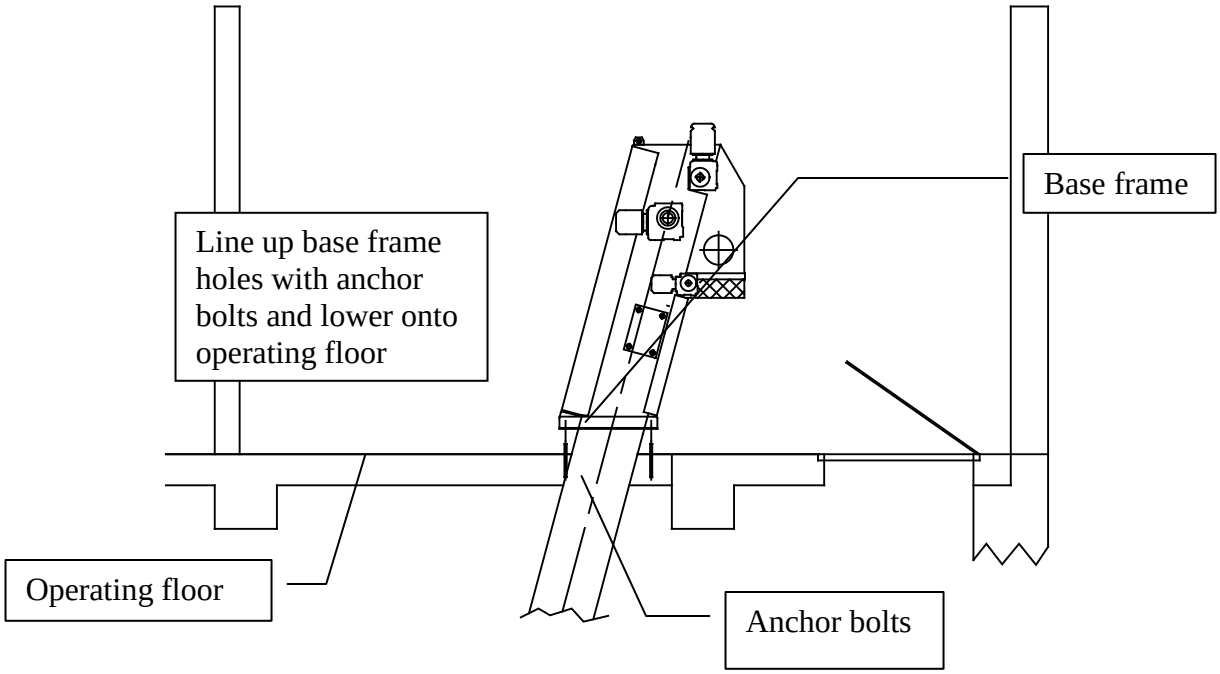

6. Using a precision level, the unit should be checked for level, and shims should be used under the base frame to correct any irregularities in the concrete. Only then can the base frame anchor bolts be secured.
7. The base frame should now be grouted in.

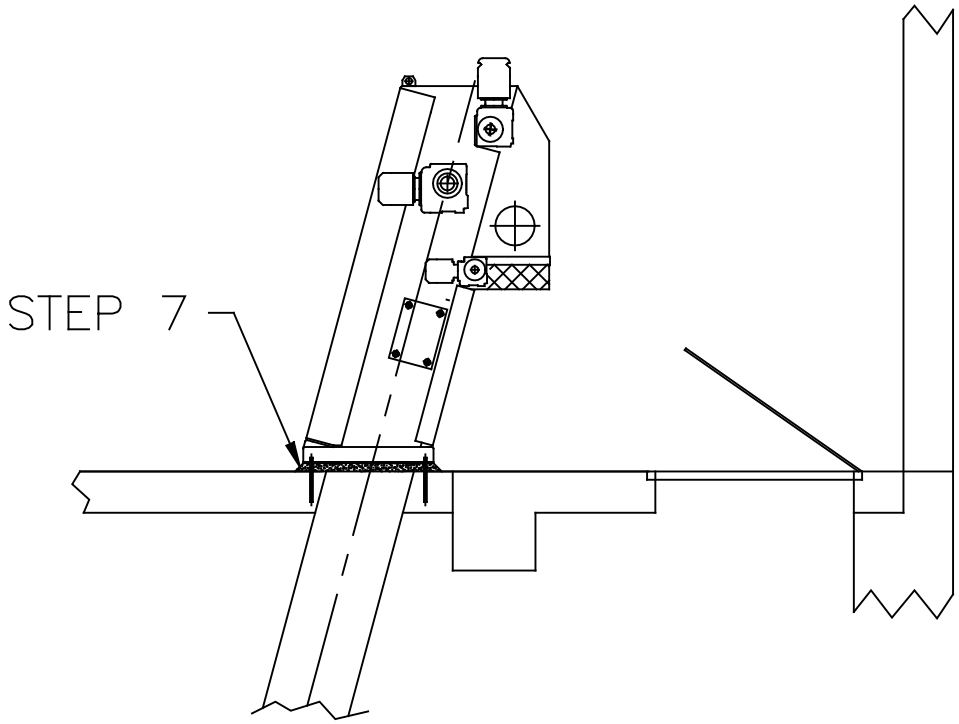

8. If applicable grout fill channel floor recess to form transition slope as shown on installation drawing- Step 9 & 10

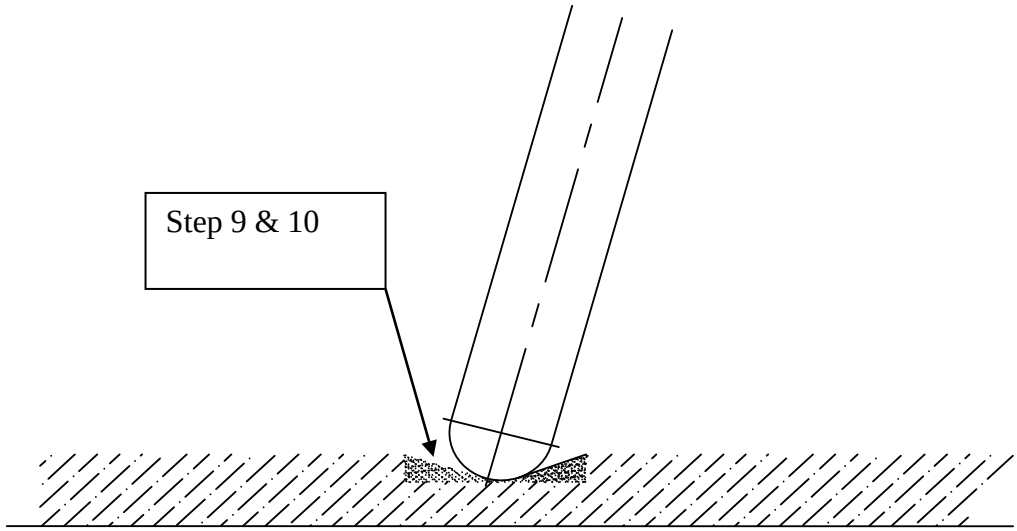

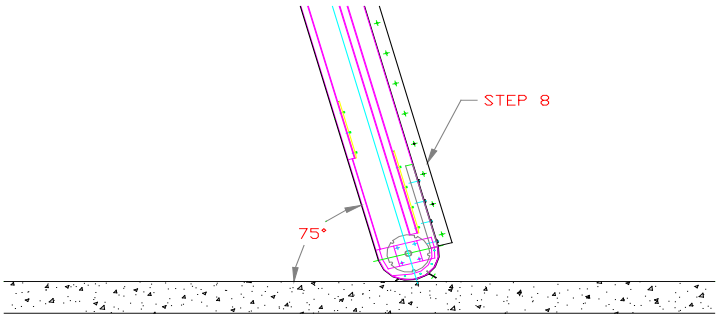

INSTALLATION INSTRUCTIONS CONT.

9. Install the channel wall screen side seals – see Step 8 – NOTE: For Pivot installations the channel wall side seals are installed on the downstream side of the screen.
10. Now install the Pivot arrangement into position as shown on the installation drawing and below.

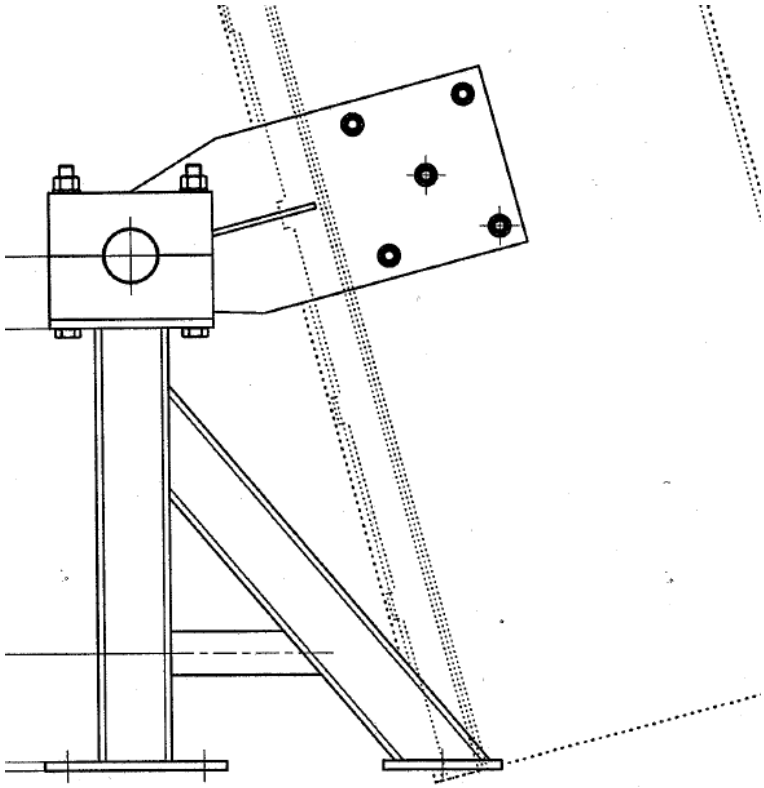

Step 10

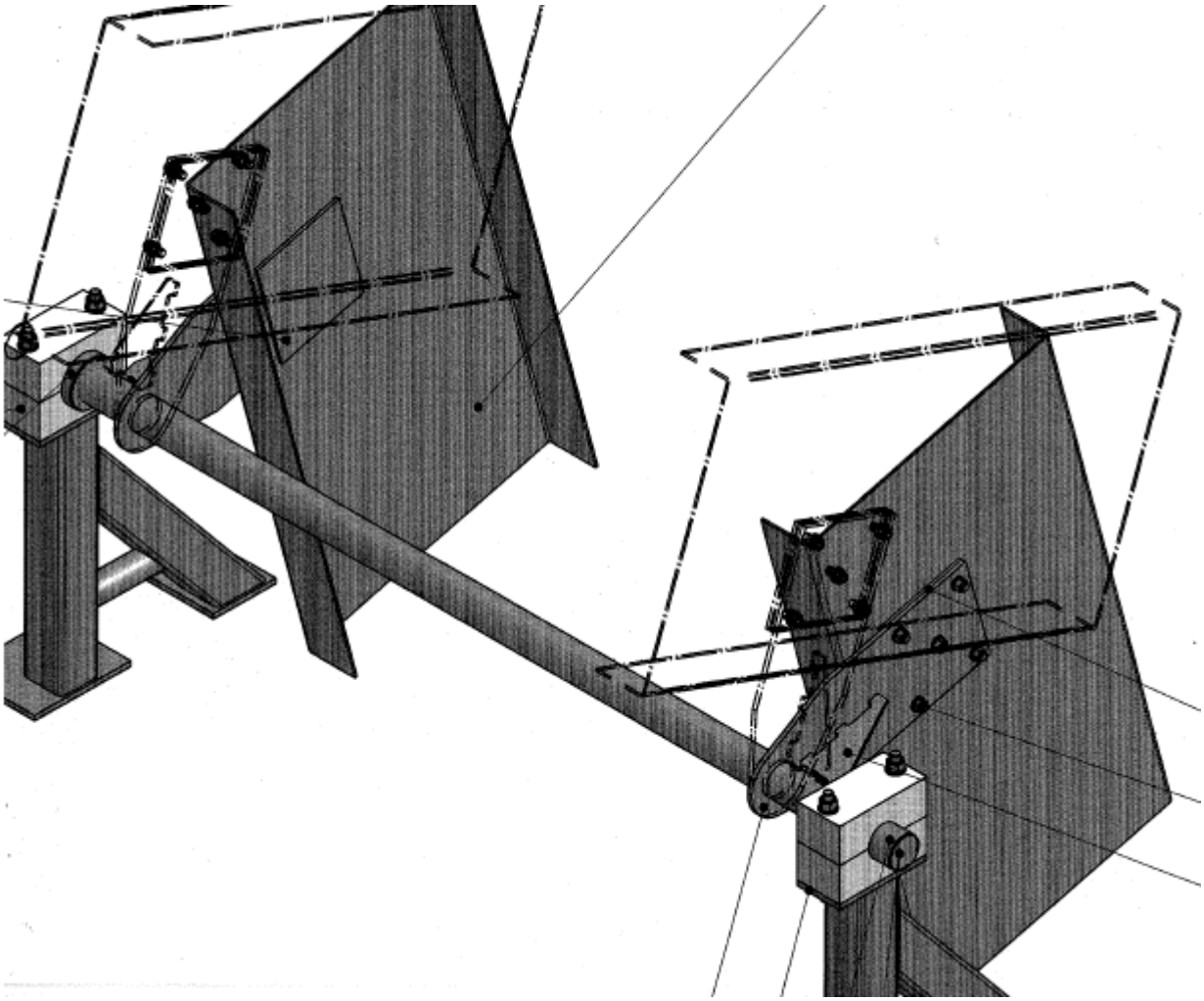

Step 10

11. You can check the position of the pivoting system by using the measures on the attached installation drawing.
12. Once the pivot is in the proper position and attached properly to the pivot rod you can drill the holes for the Pivot arrangement into the concrete and fix it with stud chemical anchors provided.
13. Place compactor in position (shim as needed) following dimensions shown on installation drawing. Install anchors as needed but do not tighten anchors yet. Important that the compactor inlet hopper lines up under the screen discharge roller.
14. Install compactor discharge pipe noting orientation and pipe support as shown on installation drawing.
15. The motors can now be wired.
16. The wash water ball valves, solenoid valves and strainers can now be installed.

WASTE-TECH
a division of KUSTERS ZIMA

1.8

MAXIMUM DIFFERENTIAL HEAD CALCULATION

COMPUTERIZED
STRUCTURAL
DESIGN, S.C.

CONSULTING ENGINEERS

8989 N. Port Washington Road - Milwaukee, WI 53217-1633
Telephone (414) 351-5588 FAX (414) 351-4617

STRUCTURAL CALCULATIONS

PROJECT

WENATCHEE WWTP
WENATCHEE, WASHINGTON

PREPARED FOR

WASTE TECH
A Division of KÜSTERS ZIMA Corporation
SPARTANBURG, SC

CSD Job# J120255MAM

DATE
4/5/2012

SECTION	PAGES
- Summary, Scope and Loads	S1 to S3
- Reactions	R1 to R2
- Design Criteria and Analysis	1 to 38
- Waste Tech Drawings for reference	D1 to D8

MAHMOUD MAAMOURI
STATE OF WASHINGTON
47348
REGISTERED STRUCTURAL PROFESSIONAL ENGINEER

4-6-2012

COMPUTERIZED
STRUCTURAL
DESIGN, S.C.

CONSULTING ENGINEERS

8989 N. Port Washington Road
Milwaukee, WI 53217-1633
414-351-5588 FAX 414-351-4617

Summary

1. Filter frame with thickness of 3/16" stainless steel was checked and found to be adequate.
2. Screen punch plate with thickness of 1/8" stainless steel was checked and found to be adequate.
3. Maximum deflection of the filter frame is 1/8", however, there is a seal angle anchored to the wall that supports the frame, so there should be very little deflection.
4. Maximum deflection of the screen frame is approximately 1/16" at maximum differential head of 5'-6".
5. Screen frame shall be attached to the concrete structure in accordance with pages 27, 28, and 33.
6. Reactions can be found on page R1 and R2.

COMPUTERIZED
STRUCTURAL
DESIGN, S.C.
CONSULTING ENGINEERS
8989 N. Port Washington Road
Milwaukee, WI 53217-1633
414-351-5588 FAX 414-351-4617

Project Scope

Design of the formed perforated steel plate screen and formed steel channels of the screening assembly.

These calculations and details apply only to items supplied by Waste Tech (WT) and are based on WT information submitted to CSD on April 2, 2012. The information includes WT drawing sheets 784039 1 and 2 of 2, 782940, SM-C21883 1 thru 3 of 3, and C778467 (attached for reference only).

The loading used for design of this project is based on the 2009 IBC and ASCE 7-05 and specifications / technical data provided by WT.

These summary details and related engineering work apply only to the following items:
- The integrity of the steel members supporting the formed perforated steel plate screens.
- The integrity of the formed perforated steel plate screens.
- The connections of the steel members to the supporting structure.

The enclosed information is provided for coordination with Waste Tech drawings for the sole purpose of defining the structural framing and connection requirements for the screening system.

The following items are not included in these summary details and related engineering work:
- Design of the electrical or mechanical components.
- Design or analysis of the supporting structure.
- Shop fabrication and inspection.
- Field inspection.
- **NOTE:** Any assumptions regarding the conditions of the supporting structure that have been made are noted on the reactions sheets (R). The designer of the supporting structure should review this information. The forces applied by the screen to the supporting structure are delineated on the reaction sheets. In all cases the supporting structure must be able to withstand the loads applied by the screen.

COMPUTERIZED
STRUCTURAL
DESIGN, S.C.
CONSULTING ENGINEERS
8989 N. Port Washington Road
Milwaukee, WI 53217-1633
414-351-5588 FAX 414-351-4617

Project Location

Wenatchee, Washington

Building Code

IBC 2009
ASCE 7-05

Dead Loads

Unit Weight (Filter Screen)	~4600#

Hydrostatic Loads

Differential Head	5 ft - 6 in

Seismic Loads

Ss	0.50
Site Class	D (assumed)
Ie	1.5
Ss	0.50
Sds	(2/3)*1.4*0.5 = 0.47
Ap=Rp	2.5
Z	grade

Fp=0.4*Ap*Sds*Wp/(Rp/Ip)

Fp=0.4*2.5*0.47*Wp/(2.5/1.5) = 0.28Wp

Load Combinations

D
D + HL
D + 0.7E

REACTIONS

- f'_c = 3000psi ASSUMED MINIMUM
- SEE PAGE 27, 28, AND 33 FOR NOTES

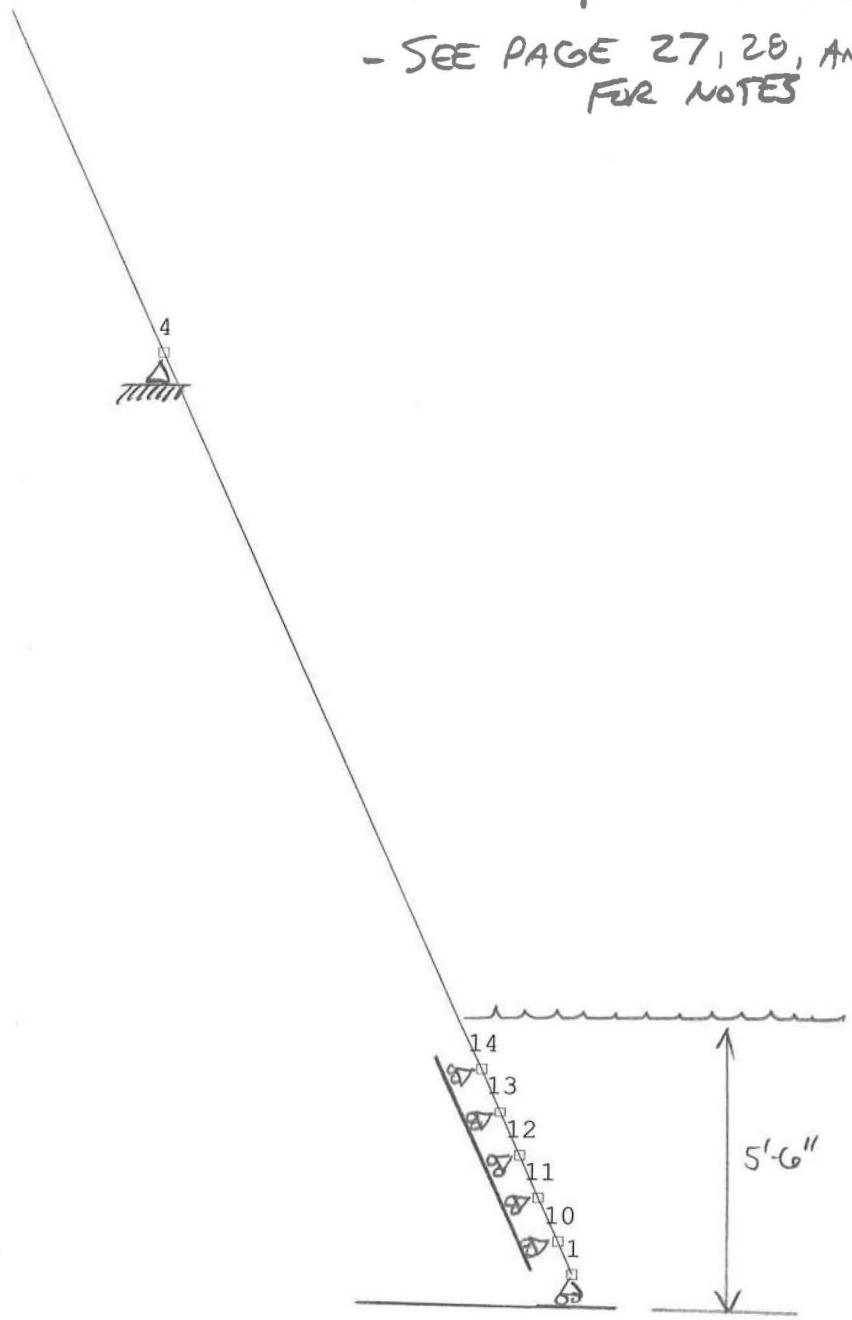

WENATCHEE WWTP

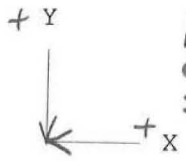

REACTION COORDINATE SYSTEM

UNITS
Inches Kips

ASD REACTIONS

SCREEN IS 3 FEET WIDE = CHANNEL TRIBUTARY WIDTH 1.5 FEET

STRUCTURAL LOADS
LOAD 1 'DEAD LOAD'
LOAD 2 'HYDROSTATIC LOAD'
LOAD 3 'SEISMIC LOAD IN X'

STRUCTURAL LOAD COMBINATIONS
FORM LOAD 10 'DL + HL' FROM 1 1.0 2 1.0
FORM LOAD 11 'DL + 0.7EX' FROM 1 1.0 3 0.7
FORM LOAD 12 'DL - 0.7EX' FROM 1 1.0 3 0.7

ACTIVE UNITS INCH KIP DEG DEGF SEC

THE SUPPORT STRUCTURE MUST BE ABLE TO WITHSTAND THE REACTIONS FROM THE ANCHORS.

RESULTANT JOINT LOADS SUPPORTS

JOINT	LOADING	FORCE X FORCE	FORCE Y FORCE	FORCE Z FORCE	MOMENT X MOMENT	MOMENT Y MOMENT	MOMENT Z MOMENT
1	GLOBAL						
	1	0.000	0.733				0.000
	2	0.000	0.003				0.000
	3	0.000	0.130				0.000
	10	0.000	0.736				0.000
	11	0.000	0.823				0.000
	12	0.000	0.823				0.000
4	GLOBAL						
	1	0.026	1.579				0.000
	2	0.001	-0.003				0.000
	3	-0.583	-0.004				0.000
	10	0.027	1.577				0.000
	11	-0.383	1.576	~> .383/0.7 = .55 = 0.6K			0.000
	12	-0.383	1.576				0.000
10	GLOBAL						
	1	-0.509	-0.237				0.000
	2	0.670	0.313				0.000
	3	-0.133	-0.062				0.000
	10	0.162	0.075				0.000
	11	-0.601	-0.280				0.000
	12	-0.601	-0.280				0.000
11	GLOBAL						
	1	0.349	0.163				0.000
	2	0.181	0.084				0.000
	3	0.061	0.029				0.000
	10	0.530	0.247				0.000
	11	0.392	0.183				0.000
	12	0.392	0.183				0.000
12	GLOBAL						
	1	-0.020	-0.009				0.000
	2	0.300	0.140				0.000
	3	-0.101	-0.047				0.000
	10	0.280	0.131				0.000
	11	-0.091	-0.042				0.000
	12	-0.091	-0.042				0.000
13	GLOBAL						
	1	-0.111	-0.052				0.000
	2	0.148	0.069				0.000
	3	0.213	0.099				0.000
	10	0.038	0.018				0.000
	11	0.039	0.018				0.000
	12	0.039	0.018				0.000
14	GLOBAL						
	1	0.264	0.123				0.000
	2	0.109	0.051				0.000
	3	-0.310	-0.145				0.000
	10	0.374	0.174				0.000
	11	0.047	0.022				0.000
	12	0.047	0.022				0.000

COMPUTERIZED
STRUCTURAL
DESIGN, S.C.
CONSULTING ENGINEERS
8989 N. Port Washington Rd.
Milwaukee, WI 53217-1633
414-351-5588 FAX 414-351-4617

Project WENATCHEE WWTP
Job No. J120255 MAM By MAE
Date Page 1 of

STRUCTURAL ANALYSIS OF SIDE CHANNELS

→ A SINGLE CHANNEL IN ANALYSIS

FILTER SCREEN FRAME JOINTS
– ONE SIDE CHANNEL OF 2

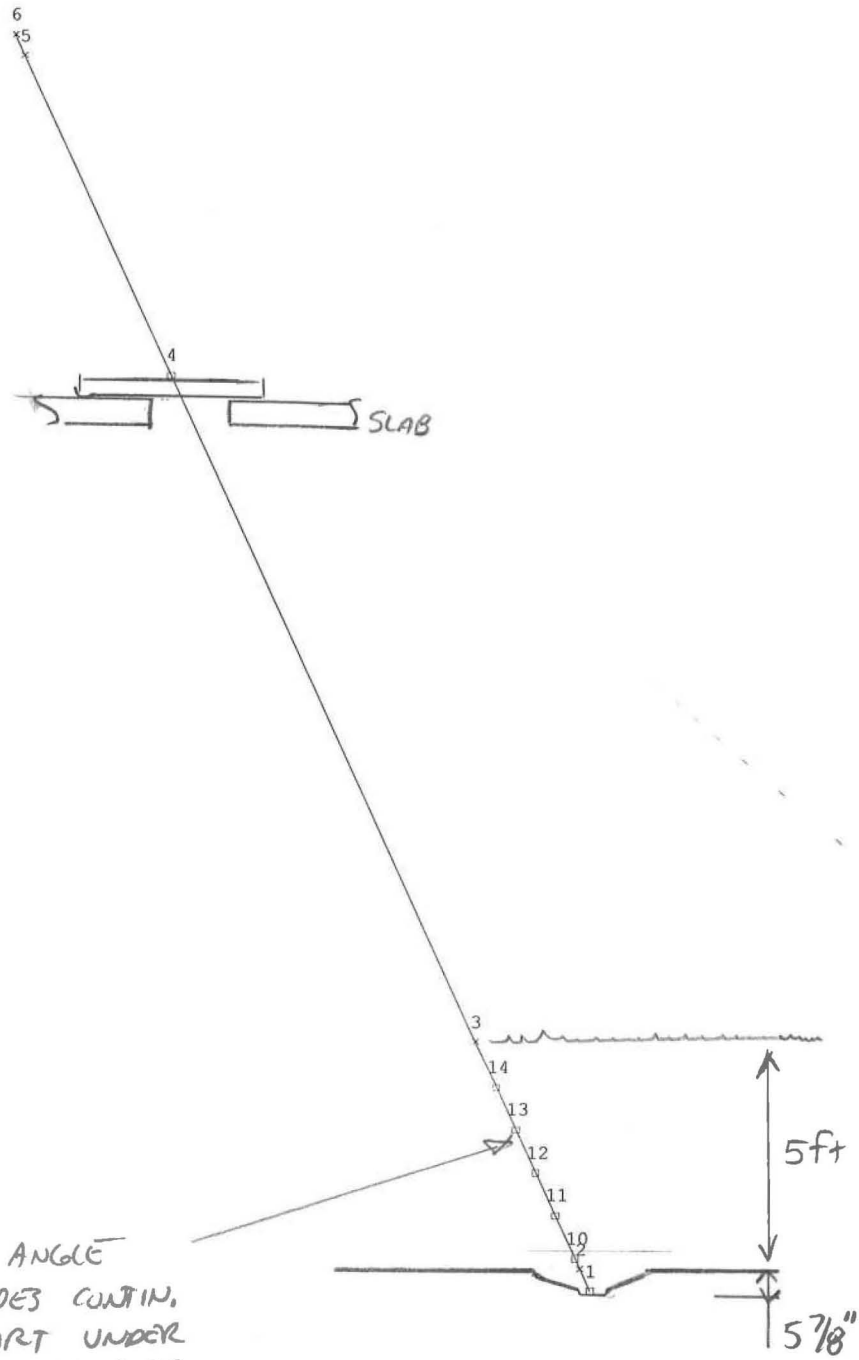

WENATCHEE WWTP

Y

X

Inches Kips

FILTER SCREEN FRAME MEMBERS
– ONE SIDE CHANNEL OF 2

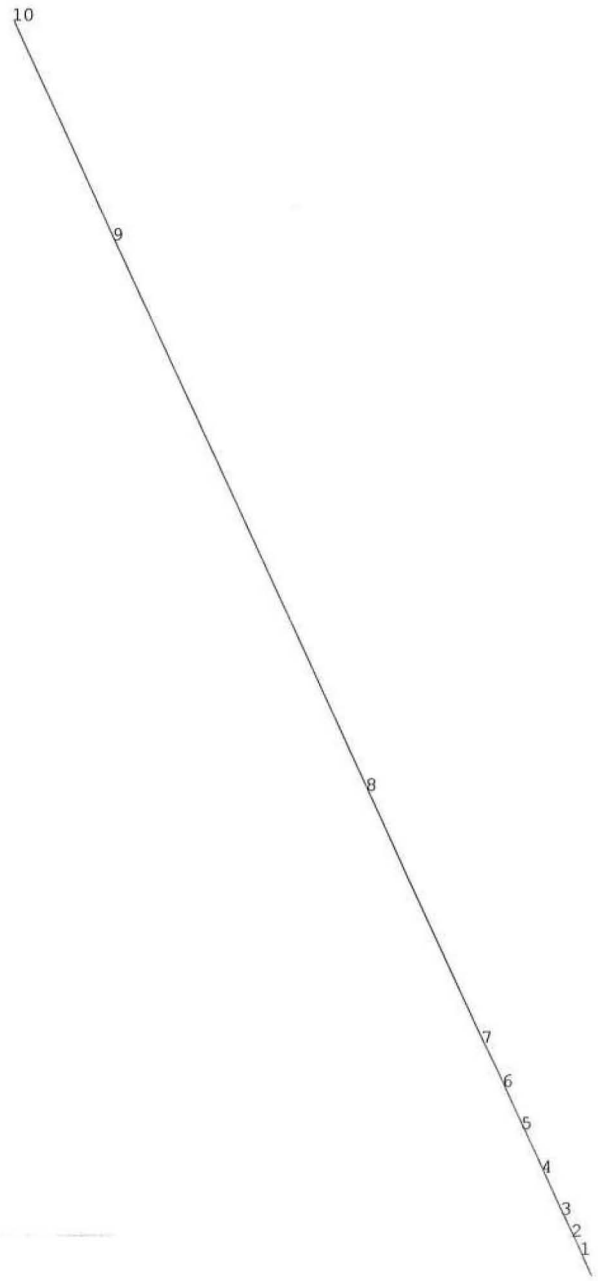

WENATCHEE WWTP

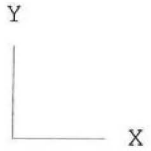

Inches Kips

REACTIONS : DL + HL
(5'- 6" HEAD)

REACTIONS LOAD 10

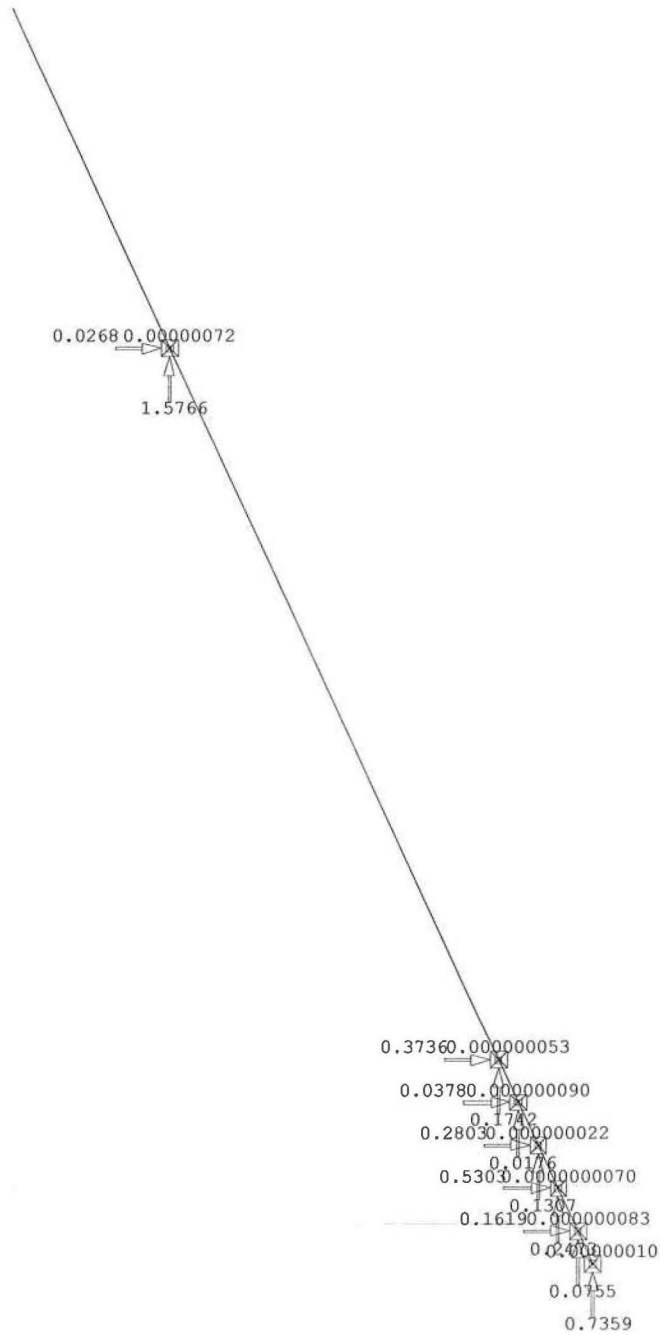

WENATCHEE WWTP

Y

X

Inches Kips

REACTIONS IN CHANNEL : DL + HL
(5'-6" HEAD)

REACTIONS LOAD 10

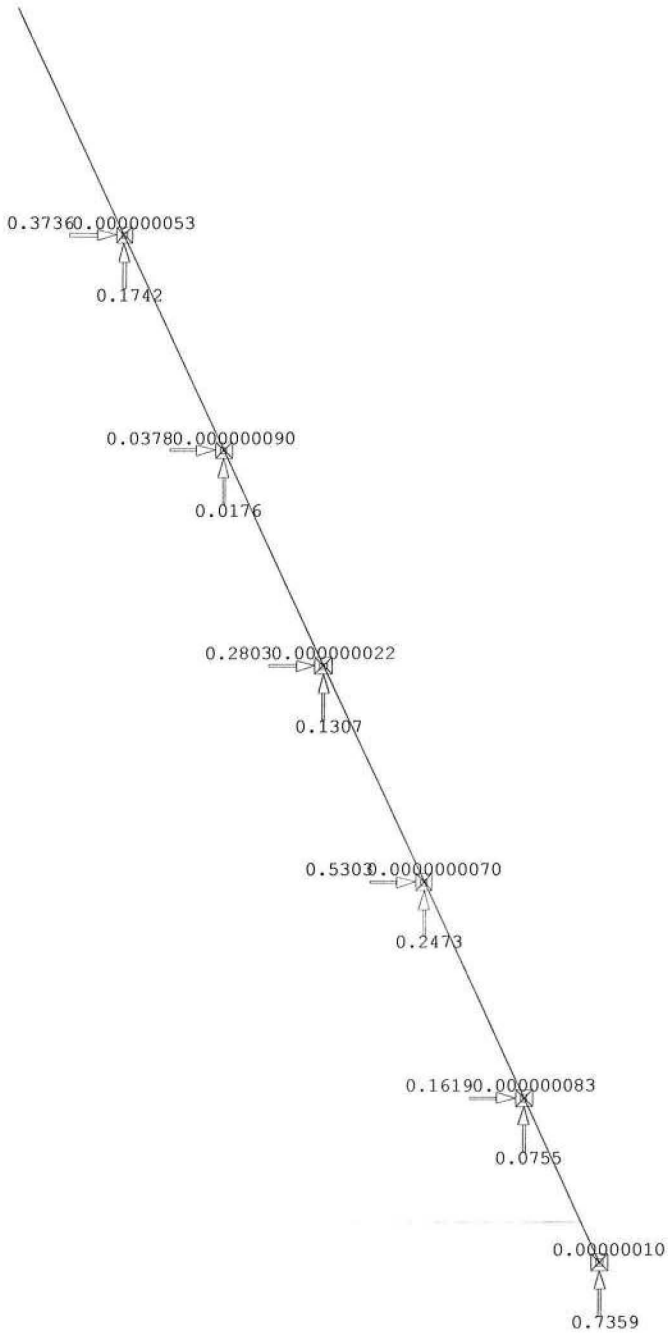

WENATCHEE WWTP

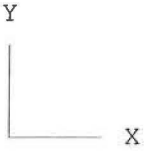

Inches Kips

CHANNEL MOMENT

MZ DIA LD 10

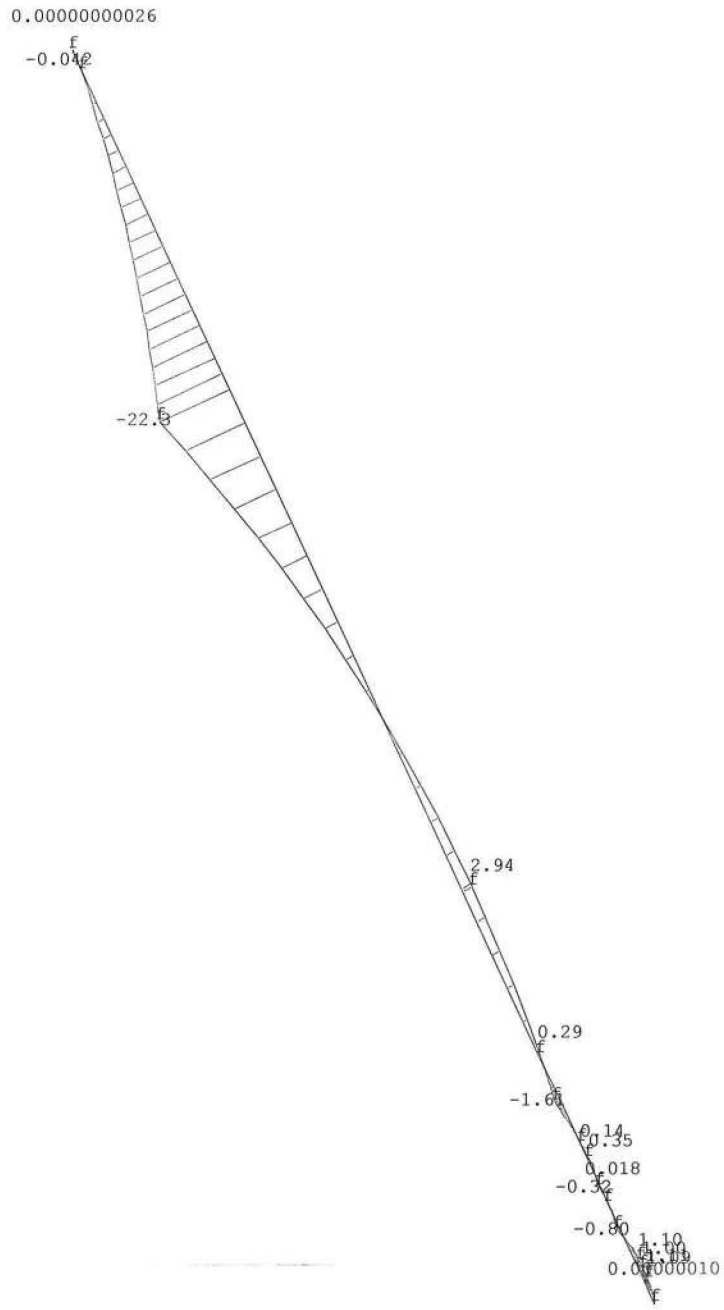

WENATCHEE WWTP

Y

X

Inches Kips

CHANNEL SHEAR

FY DIA LD 10

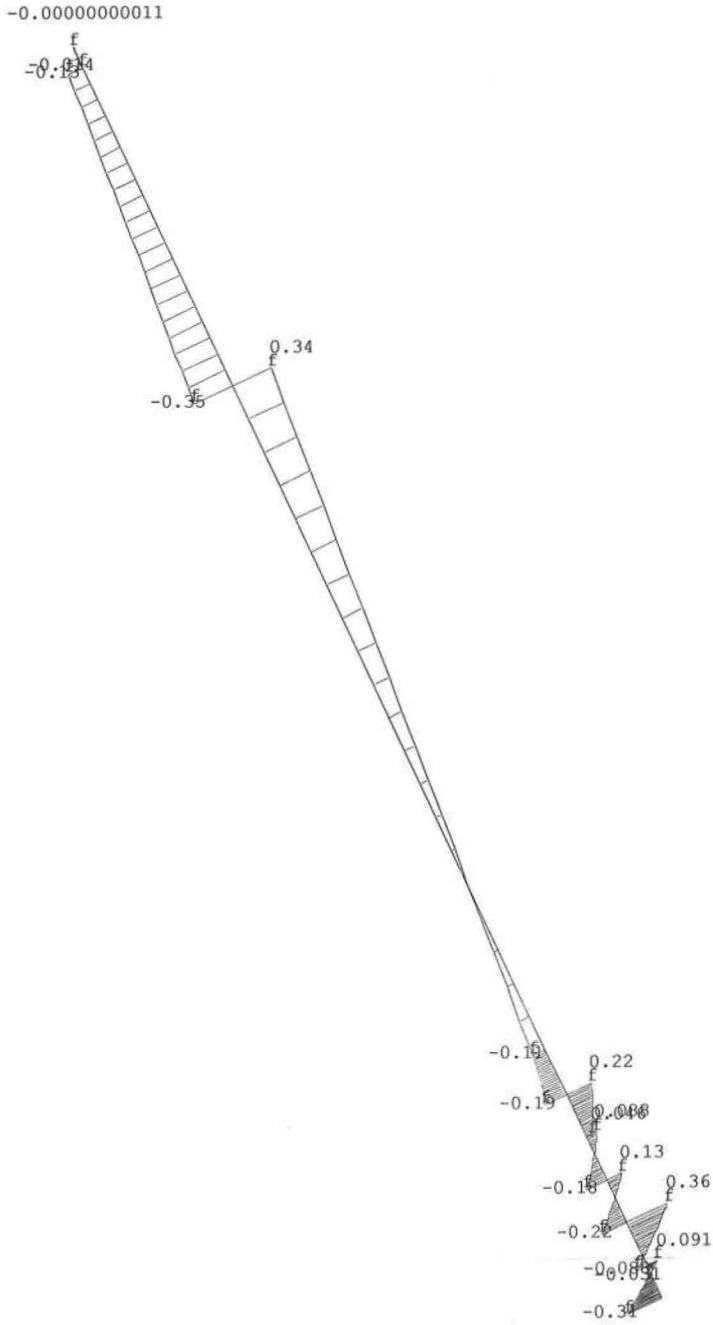

WENATCHEE WWTP

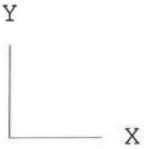

Inches Kips

CHANNEL AXIAL

FX DIA LD 10

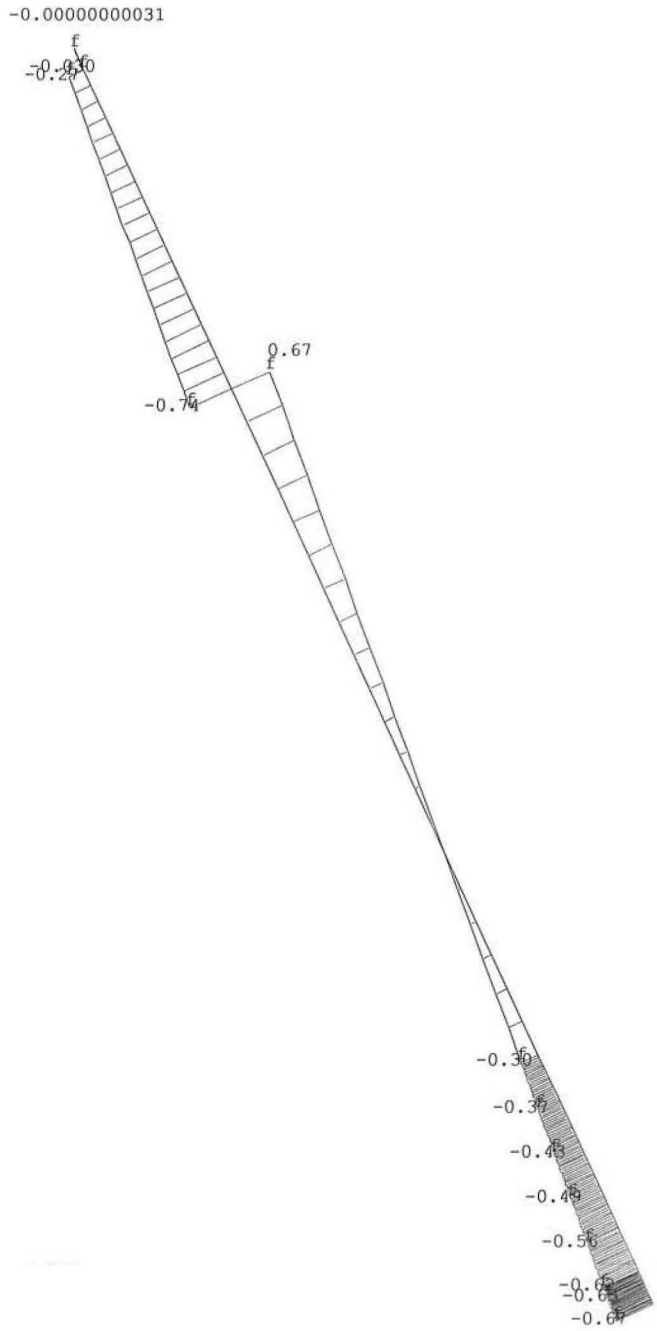

WENATCHEE WWTP

Y

X

Inches Kips

9

Commercial Software Rights Legend

Any use, duplication or disclosure of this software by or for the U.S. Government shall be restricted to the terms of a license agreement in accordance with the clause at DFARS 227.7202-3.

This computer software is an unpublished work containing valuable trade secrets owned by the Georgia Tech Research Corporation (GTRC). No access, use, transfer, duplication or disclosure thereof may be made except under a license agreement executed by GTRC or its authorized representatives and no right, title or interest thereto is conveyed or granted herein, notwithstanding receipt or possession hereof. Decompilation of the object code is strictly prohibited.

Georgia Tech Research Corporation
Georgia Institute of Technology
Atlanta, Georgia 30332 U.S.A.

Copyright (c) 2010 GTRC
ALL RIGHTS RESERVED.

```
# Wed Apr  4 15:00:23 2012


1GTICES/C-NP 2.5.0 MD-NT 2.0, January 1995.
 Proprietary to Georgia Tech Research Corporation, U.S.A.

Reading password file C:\Program Files (x86)\GTStrudl\31\password31.pwd
 CI-i-audfile, Command AUDIT file FILE1500.aud has been activated.

 *** G T S T R U D L ***
    RELEASE DATE          VERSION             COMPLETION NO.
    August 2010           31.0                    5206

 **** ACTIVE UNITS -  LENGTH   WEIGHT   ANGLE    TEMPERATURE   TIME
 **** ASSUMED TO BE     INCH    POUND   RADIAN    FAHRENHEIT   SECOND


{     1} > $ ---------------------------------------------------------------------------
{     2} > $ This is the Common Startup Macro; put your company-wide startup commands here.
{     3} > $ You can edit this file from Tools -- Macros.  Click "Startup" and then "Edit".
{     4} > $ ---------------------------------------------------------------------------
{     5} > CINPUT  -
{     6} >_'M:\2012\J120255MAM-City of Wenatchee WWTP Improvements - Filter Screens\Engineering\J120255MAM RAILS final.txt'
{     7} > CHANGE ID 'J120255'
{     8} > PLOT FORMAT TITLE 'WENATCHEE WWTP'
{     9} > MATERIAL STEEL
{    10} > MEMBER TYPE PLANE FRAME
{    11} > SECTION FR DS 0.0 .1
{    12} > OUTPUT DEC 3
{    13} > OUTPUT BY JOI
{    14} > OUTPUT FIELD FIXED
{    15} > OUTPUT ORDERED
{    16} > UNITS INCH POUNDS DEGREES
{    17} >
{    18} > JOI COORD
{    19} > 6 -155.022 332.446
{    20} > 1 0 0
{    21} >
{    22} > GEN BETWEEN 1 6 ID 2 INCR 1
{    23} > XDIRECTION 5 PARTS RATIO 6.482 66.203 194.472 93.656 6

  /-------   CARTESIAN COORDINATES      FREE, GLOBAL  -------/

      JOINT            X              Y              Z

         2           -2.739          5.875          0.000
         3          -30.718         65.875          0.000
         4         -112.906        242.127          0.000
         5         -152.486        327.008          0.000

{    24} >
{    25} > GEN BETWEEN 2 3 ID 10 INCR 1
{    26} > XDIRECTION 6 PARTS 3 12.5 12.5 12.5 12.5 13.203

  /-------   CARTESIAN COORDINATES      FREE, GLOBAL  -------/

      JOINT            X              Y              Z

        10           -4.007          8.594          0.000
        11           -9.290         19.922          0.000
        12          -14.573         31.251          0.000
        13          -19.855         42.580          0.000
        14          -25.138         53.909          0.000

{    27} >
{    28} > MEM INC
{    29} > 1 1 2
{    30} > 2 2 10
{    31} > 3 10 11
{    32} > 4 11 12
{    33} > 5 12 13
{    34} > 6 13 14
{    35} > 7 14 3
{    36} > 8 3 4
{    37} > 9 4 5
{    38} > 10 5 6
{    39} >
{    40} >
{    41} > STATUS SUPPORT 1 10 TO 14 4
{    42} >
{    43} > UNIT INCH KIP
{    44} > JOI REL
{    45} > 1 10 TO 14 4 MOM Z
{    46} > 1 for x
{    47} > 10 TO 14 for y thl 25
{    48} > $10 TO 14 KFX 1
{    49} >
{    50} > UNIT INCH POUND
{    51} > MEM PROP
{    52} > 1 TO 10 AX 5.21 IZ 272.8
{    53} >
```

10

```
{   54} > UNIT FEET POUND
{   55} > $ SCREEN 3 FEET WIDE = CHANNEL TRIBUTARY WIDTH 1.5 FEET
{   56} > $ STRUCTURAL LOADS
{   57} >
{   58} > LOAD 1 'DEAD LOAD'
{   59} > MEMBER LOAD
{   60} > 1 TO 10 FOR Y GLO UNIF -66.4235
{   61} > JOINT LOAD
{   62} > 5 FOR Y -269.5
{   63} >
{   64} > LOAD 2 'HYDROSTATIC LOAD'
{   65} > MEMBER LOAD
{   66} > 1 FOR Y GLO PRO LIN FRA -513.864 -468 0 1.0
{   67} > 1 FOR X GLO PRO LIN FRA -513.864 -468 0 1.0
{   68} > 2 FOR Y GLO PRO LIN FRA -468 -446.85 0 1.0
{   69} > 2 FOR X GLO PRO LIN FRA -468 -446.85 0 1.0
{   70} > 3 FOR Y GLO PRO LIN FRA -446.85 -358.49 0 1.0
{   71} > 3 FOR X GLO PRO LIN FRA -446.85 -358.49 0 1.0
{   72} > 4 FOR Y GLO PRO LIN FRA -358.49 -270.13 0 1.0
{   73} > 4 FOR X GLO PRO LIN FRA -358.49 -270.13 0 1.0
{   74} > 5 FOR Y GLO PRO LIN FRA -270.13 -181.77 0 1.0
{   75} > 5 FOR X GLO PRO LIN FRA -270.13 -181.77 0 1.0
{   76} > 6 FOR Y GLO PRO LIN FRA -181.77 -93.41 0 1.0
{   77} > 6 FOR X GLO PRO LIN FRA -181.77 -93.41 0 1.0
{   78} > 7 FOR Y GLO PRO LIN FRA -93.41 0 0 1.0
{   79} > 7 FOR X GLO PRO LIN FRA -93.41 0 0 1.0
{   80} >
{   81} > LOAD 3 'SEISMIC LOAD IN X AT 0.3WP FOR SDS=0.47'
{   82} > MEMBER LOAD
{   83} > 1 TO 10 FOR X GLO UNIF 25.23
{   84} > JOINT LOAD
{   85} > 5 FOR X 81
{   86} >
{   87} >
{   88} > $ STRUCTURAL LOAD COMBINATIONS
{   89} > FORM LOAD 10 'DL + HL' FROM 1 1.0 2 1.0
{   90} > FORM LOAD 11 'DL + 0.7EX' FROM 1 1.0 3 0.7
{   91} > FORM LOAD 12 'DL - 0.7EX' FROM 1 1.0 3 0.7
{   92} >
{   93} > STIFFN


BANDWIDTH INFORMATION BEFORE RENUMBERING.


THE MAXIMUM BANDWIDTH IS      7 AND OCCURS AT JOINT 14
THE AVERAGE BANDWIDTH IS                          1.909
THE STANDARD DEVIATION OF THE BANDWIDTH IS        2.234
                                             ----------
                                                  4.143
                                             ==========


BANDWIDTH INFORMATION AFTER  RENUMBERING.


THE MAXIMUM BANDWIDTH IS      1 AND OCCURS AT JOINT 1
THE AVERAGE BANDWIDTH IS                          0.909
THE STANDARD DEVIATION OF THE BANDWIDTH IS        0.287
                                             ----------
                                                  1.197
                                             ==========
TIME FOR CONSISTENCY CHECKS FOR     10 MEMBERS       0.00 SECONDS
TIME FOR BANDWIDTH REDUCTION                         0.00 SECONDS
TIME TO GENERATE     10 ELEMENT STIF. MATRICES       0.00 SECONDS
TIME TO PROCESS       98 MEMBER LOADS                0.00 SECONDS
TIME TO ASSEMBLE THE STIFFNESS MATRIX                0.00 SECONDS
TIME TO PROCESS     11 JOINTS                        0.00 SECONDS
TIME TO SOLVE WITH    1 PARTITIONS                   0.00 SECONDS
TIME TO PROCESS     11 JOINT DISPLACEMENTS           0.00 SECONDS
TIME TO PROCESS     10 ELEMENT DISTORTIONS           0.00 SECONDS
TIME FOR STATICS CHECK                               0.00 SECONDS
{   94} > UNIT INCH
{   95} > PRINT MEM LENGTH

****************************************
*  PROBLEM DATA FROM INTERNAL STORAGE  *
****************************************


JOB ID - J120255      JOB TITLE - NONE GIVEN

ACTIVE UNITS -  LENGTH        WEIGHT        ANGLE       TEMPERATURE       TIME
                  INCH          LB            DEG           DEGF            SEC
MEMBER                      LENGTH------/

MEMBER                      LOCAL COORD.

1                               6.482
2                               3.000
3                              12.500
4                              12.500
5                              12.500
6                              12.500
7                              13.203
8                             194.472
9                              93.656
10                              6.000


****************************************
*  END OF DATA FROM  INTERNAL STORAGE  *
****************************************

{   96} > PRINT JOI COORD

****************************************
*  PROBLEM DATA FROM INTERNAL STORAGE  *
****************************************
```

11

JOB ID - J120255 JOB TITLE - NONE GIVEN

ACTIVE UNITS -	LENGTH INCH	WEIGHT LB	ANGLE DEG	TEMPERATURE DEGF	TIME SEC

JOINT COORDINATES----------/

JOINT	X	Y	Z	CONDITION	
1	0.000	0.000	0.000	SUPPORT	GLOBAL
2	-2.739	5.875	0.000	FREE	GLOBAL
3	-30.718	65.875	0.000	FREE	GLOBAL
4	-112.906	242.127	0.000	SUPPORT	GLOBAL
5	-152.486	327.008	0.000	FREE	GLOBAL
6	-155.022	332.446	0.000	FREE	GLOBAL
10	-4.007	8.594	0.000	SUPPORT	GLOBAL
11	-9.290	19.922	0.000	SUPPORT	GLOBAL
12	-14.573	31.251	0.000	SUPPORT	GLOBAL
13	-19.855	42.580	0.000	SUPPORT	GLOBAL
14	-25.138	53.909	0.000	SUPPORT	GLOBAL

```
****************************************
*  END OF DATA FROM  INTERNAL STORAGE  *
****************************************

{   97} > UNIT FEET
{   98} > PRINT MEM LENGTH

****************************************
*  PROBLEM DATA FROM INTERNAL STORAGE  *
****************************************
```

JOB ID - J120255 JOB TITLE - NONE GIVEN

ACTIVE UNITS -	LENGTH FEET	WEIGHT LB	ANGLE DEG	TEMPERATURE DEGF	TIME SEC

MEMBER LENGTH------/

MEMBER	LOCAL COORD.
1	0.540
2	0.250
3	1.042
4	1.042
5	1.042
6	1.042
7	1.100
8	16.206
9	7.805
10	0.500

```
****************************************
*  END OF DATA FROM  INTERNAL STORAGE  *
****************************************

{   99} > PRINT JOI COORD

****************************************
*  PROBLEM DATA FROM INTERNAL STORAGE  *
****************************************
```

JOB ID - J120255 JOB TITLE - NONE GIVEN

ACTIVE UNITS -	LENGTH FEET	WEIGHT LB	ANGLE DEG	TEMPERATURE DEGF	TIME SEC

JOINT COORDINATES----------/

JOINT	X	Y	Z	CONDITION	
1	0.000	0.000	0.000	SUPPORT	GLOBAL
2	-0.228	0.490	0.000	FREE	GLOBAL
3	-2.560	5.490	0.000	FREE	GLOBAL
4	-9.409	20.177	0.000	SUPPORT	GLOBAL
5	-12.707	27.251	0.000	FREE	GLOBAL
6	-12.919	27.704	0.000	FREE	GLOBAL
10	-0.334	0.716	0.000	SUPPORT	GLOBAL
11	-0.774	1.660	0.000	SUPPORT	GLOBAL
12	-1.214	2.604	0.000	SUPPORT	GLOBAL
13	-1.655	3.548	0.000	SUPPORT	GLOBAL
14	-2.095	4.492	0.000	SUPPORT	GLOBAL

```
****************************************
*  END OF DATA FROM  INTERNAL STORAGE  *
****************************************

{  100} > UNIT KIP INCH
{  101} > LOAD LIST ALL
{  102} > LIST DISPL

   ****************************
   *RESULTS OF LATEST ANALYSES*
   ****************************

    PROBLEM - J120255   TITLE - NONE GIVEN

    ACTIVE UNITS  INCH KIP  DEG  DEGF SEC
```

RESULTANT JOINT DISPLACEMENTS SUPPORTS

JOINT	LOADING	/----------DISPLACEMENT----------//			----------ROTATION----------/		
		X DISP.	Y DISP.	Z DISP.	X ROT.	Y ROT.	Z ROT.
1	GLOBAL						

12

		1	0.000	0.000					0.000
		2	0.000	0.000					0.000
		3	0.000	0.000					0.000
		10	0.000	0.000					0.000
		11	0.000	0.000					0.000
		12	0.000	0.000					0.000
4	GLOBAL								
		1	0.000	0.000					0.005
		2	0.000	0.000					0.000
		3	0.000	0.000					-0.004
		10	0.000	0.000					0.005
		11	0.000	0.000					0.003
		12	0.000	0.000					0.003
10	GLOBAL								
		1	0.000	0.000					0.000
		2	0.000	0.000					0.000
		3	0.000	0.000					0.000
		10	0.000	0.000					0.000
		11	0.000	0.000					0.000
		12	0.000	0.000					0.000
11	GLOBAL								
		1	0.000	0.000					0.000
		2	0.000	0.000					0.000
		3	0.000	0.000					0.000
		10	0.000	0.000					0.000
		11	0.000	0.000					0.000
		12	0.000	0.000					0.000
12	GLOBAL								
		1	0.000	0.000					0.000
		2	0.000	0.000					0.000
		3	0.000	0.000					0.000
		10	0.000	0.000					0.000
		11	0.000	0.000					0.000
		12	0.000	0.000					0.000
13	GLOBAL								
		1	0.000	0.000					0.000
		2	0.000	0.000					0.000
		3	0.000	0.000					0.000
		10	0.000	0.000					0.000
		11	0.000	0.000					0.000
		12	0.000	0.000					0.000
14	GLOBAL								
		1	0.000	0.000					0.000
		2	0.000	0.000					0.000
		3	0.000	0.000					0.000
		10	0.000	0.000					0.000
		11	0.000	0.000					0.000
		12	0.000	0.000					0.000

RESULTANT JOINT DISPLACEMENTS FREE JOINTS

JOINT	LOADING		/----------DISPLACEMENT----------		//----------		ROTATION----------		/-
			X DISP.	Y DISP.	Z DISP.	X ROT.	Y ROT.	Z ROT.	
2	GLOBAL								
		1	0.000	0.000				0.000	
		2	0.000	0.000				0.000	
		3	0.000	0.000				0.000	
		10	0.000	0.000				0.000	
		11	0.000	0.000				0.000	
		12	0.000	0.000				0.000	
3	GLOBAL								
		1	0.000	0.000				0.000	
		2	0.000	0.000				0.000	
		3	0.000	0.000				0.000	
		10	0.000	0.000				0.000	
		11	0.000	0.000				0.000	
		12	0.000	0.000				0.000	
5	GLOBAL								
		1	-0.014	-0.007				0.012	
		2	0.000	0.000				0.000	
		3	0.010	0.005				-0.008	
		10	-0.014	-0.007				0.012	
		11	-0.007	-0.004				0.006	
		12	-0.007	-0.004				0.006	
6	GLOBAL								
		1	-0.015	-0.007				0.012	
		2	0.000	0.000				0.000	
		3	0.011	0.005				-0.008	
		10	-0.015	-0.007				0.012	
		11	-0.008	-0.004				0.006	
		12	-0.008	-0.004				0.006	

(103) > LIST FOR

```
****************************
*RESULTS OF LATEST ANALYSES*
****************************
```

PROBLEM - J120255 TITLE - NONE GIVEN

ACTIVE UNITS INCH KIP DEG DEGF SEC

MEMBER FORCES

MEMBER	LOADING	JOINT	/----------FORCE----------		//----------		MOMENT----------		/-
			AXIAL	SHEAR-Y	SHEAR-Z	TORSIONAL	BENDING-Y	BENDING-Z	
1	1	1	0.664	0.310				0.000	
		2	-0.631	-0.294				1.958	
	2	1	0.003	0.001				0.000	
		2	-0.003	0.264				-0.864	
	3	1	0.117	0.055				0.000	

13

		2	-0.112	-0.067	0.395
	10	1	0.667	0.311	0.000
		2	-0.634	-0.031	1.094
	11	1	0.746	0.348	0.000
		2	-0.710	-0.341	2.234
	12	1	0.746	0.348	0.000
		2	-0.710	-0.341	2.234
2	1	2	0.631	0.294	-1.958
		10	-0.616	-0.287	2.831
	2	2	0.003	-0.264	0.864
		10	-0.003	0.378	-1.828
	3	2	0.112	0.067	-0.395
		10	-0.109	-0.073	0.605
	10	2	0.634	0.031	-1.094
		10	-0.619	0.091	1.002
	11	2	0.710	0.341	-2.234
		10	-0.693	-0.338	3.254
	12	2	0.710	0.341	-2.234
		10	-0.693	-0.338	3.254
3	1	10	0.616	-0.274	-2.831
		11	-0.554	0.303	-0.772
	2	10	0.003	0.361	1.828
		11	-0.003	0.058	-0.027
	3	10	0.109	-0.074	-0.605
		11	-0.098	0.050	-0.166
	10	10	0.619	0.088	-1.002
		11	-0.557	0.361	-0.800
	11	10	0.693	-0.325	-3.254
		11	-0.622	0.338	-0.889
	12	10	0.693	-0.325	-3.254
		11	-0.622	0.338	-0.889
4	1	11	0.554	0.083	0.772
		12	-0.491	-0.053	0.076
	2	11	0.003	0.142	0.027
		12	-0.003	0.186	-0.397
	3	11	0.098	0.018	0.166
		12	-0.087	-0.042	0.207
	10	11	0.557	0.224	0.800
		12	-0.494	0.132	-0.321
	11	11	0.622	0.095	0.889
		12	-0.552	-0.083	0.221
	12	11	0.622	0.095	0.889
		12	-0.552	-0.083	0.221
5	1	12	0.491	0.031	-0.076
		13	-0.428	-0.002	0.285
	2	12	0.003	0.146	0.397
		13	-0.003	0.090	-0.144
	3	12	0.087	-0.070	-0.207
		13	-0.076	0.046	-0.515
	10	12	0.494	0.177	0.321
		13	-0.431	0.088	0.141
	11	12	0.552	-0.018	-0.221
		13	-0.481	0.030	-0.076
	12	12	0.552	-0.018	-0.221
		13	-0.481	0.030	-0.076
6	1	13	0.428	-0.120	-0.285
		14	-0.366	0.149	-1.397
	2	13	0.003	0.074	0.144
		14	-0.003	0.069	-0.212
	3	13	0.076	0.189	0.515
		14	-0.065	-0.213	2.001
	10	13	0.431	-0.046	-0.141
		14	-0.369	0.219	-1.609
	11	13	0.481	0.013	0.076
		14	-0.411	0.000	0.004
	12	13	0.481	0.013	0.076
		14	-0.411	0.000	0.004
7	1	14	0.366	0.142	1.397
		3	-0.299	-0.111	0.278
	2	14	0.003	0.051	0.212
		3	-0.003	0.000	0.014
	3	14	0.065	-0.129	-2.001
		3	-0.053	0.104	0.466
	10	14	0.369	0.194	1.609
		3	-0.302	-0.111	0.292
	11	14	0.411	0.052	-0.004
		3	-0.336	-0.039	0.605
	12	14	0.411	0.052	-0.004
		3	-0.336	-0.039	0.605
8	1	3	0.299	0.111	-0.278
		4	0.676	0.343	-22.283
	2	3	0.003	0.000	-0.014
		4	-0.003	0.000	0.000
	3	3	0.053	-0.104	-0.466
		4	0.120	-0.267	16.338
	10	3	0.302	0.111	-0.292
		4	0.673	0.344	-22.283
	11	3	0.336	0.039	-0.605
		4	0.760	0.157	-10.847
	12	3	0.336	0.039	-0.605
		4	0.760	0.157	-10.847
9	1	4	0.744	0.347	22.283
		5	-0.274	-0.128	-0.042
	2	4	0.000	0.000	0.000
		5	0.000	0.000	0.000
	3	4	0.123	-0.263	-16.338
		5	-0.040	0.085	0.034
	10	4	0.744	0.347	22.283
		5	-0.274	-0.128	-0.042
	11	4	0.830	0.163	10.847
		5	-0.302	-0.069	-0.018
	12	4	0.830	0.163	10.847
		5	-0.302	-0.069	-0.018
10	1	5	0.030	0.014	0.042

14

	6	0.000	0.000	0.000
2	5	0.000	0.000	0.000
	6	0.000	0.000	0.000
3	5	0.005	-0.011	-0.034
	6	0.000	0.000	0.000
10	5	0.030	0.014	0.042
	6	0.000	0.000	0.000
11	5	0.034	0.006	0.018
	6	0.000	0.000	0.000
12	5	0.034	0.006	0.018
	6	0.000	0.000	0.000

(104) > LIST REACT

```
****************************
*RESULTS OF LATEST ANALYSES*
****************************
```

PROBLEM - J120255 TITLE - NONE GIVEN

ACTIVE UNITS INCH KIP DEG DEGF SEC

RESULTANT JOINT LOADS SUPPORTS ASD

JOINT	LOADING	FORCE X FORCE	FORCE Y FORCE	FORCE Z FORCE	MOMENT X MOMENT	MOMENT Y MOMENT	MOMENT Z MOMENT
1	GLOBAL						
	1	0.000	0.733				0.000
	2	0.000	0.003				0.000
	3	0.000	0.130				0.000
	10	0.000	0.736				0.000
	11	0.000	0.823				0.000
	12	0.000	0.823				0.000
4	GLOBAL						
	1	0.026	1.579				0.000
	2	0.001	-0.003				0.000
	3	-0.583	-0.004				0.000
	10	0.027	1.577				0.000
	11	-0.383	1.576				0.000
	12	-0.383	1.576				0.000
10	GLOBAL						
	1	-0.509	-0.237				0.000
	2	0.670	0.313				0.000
	3	-0.133	-0.062				0.000
	10	0.162	0.075	0.7			0.000
	11	-0.601	-0.280				0.000
	12	-0.601	-0.280				0.000
11	GLOBAL						
	1	0.349	0.163				0.000
	2	0.181	0.084				0.000
	3	0.061	0.029				0.000
	10	0.530	0.247				0.000
	11	0.392	0.183				0.000
	12	0.392	0.183				0.000
12	GLOBAL						
	1	-0.020	-0.009				0.000
	2	0.300	0.140				0.000
	3	-0.101	-0.047				0.000
	10	0.280	0.131				0.000
	11	-0.091	-0.042				0.000
	12	-0.091	-0.042				0.000
13	GLOBAL						
	1	-0.111	-0.052				0.000
	2	0.148	0.069				0.000
	3	0.213	0.099				0.000
	10	0.038	0.018				0.000
	11	0.039	0.018				0.000
	12	0.039	0.018				0.000
14	GLOBAL						
	1	0.264	0.123				0.000
	2	0.109	0.051				0.000
	3	-0.310	-0.145				0.000
	10	0.374	0.174				0.000
	11	0.047	0.022				0.000
	12	0.047	0.022				0.000

BEARING ↓

BEARING ↓

(105) > LIST SUM OF REACT

$\gamma = 62.4$

$62.4(5.5) = 343.2$

$\frac{1}{2}(5.5)(343.2)(1.5') = 1415$ ✓

```
****************************
*RESULTS OF LATEST ANALYSES*
****************************
```

PROBLEM - J120255 TITLE - NONE GIVEN

ACTIVE UNITS INCH KIP DEG DEGF SEC

SUM OF REACTIONS ABOUT COORDINATE X 0.000 Y 0.000 Z 0.000

LOADING	FORCE X FORCE	FORCE Y FORCE	FORCE Z FORCE	MOMENT X MOMENT	MOMENT Y MOMENT	MOMENT Z MOMENT
1	0.000	2.300 ✓	0.000	0.000	0.000	-198.475
2	1.411 ✓	0.658	0.000	0.000	0.000	-37.715
3	-0.852	0.000	0.000	0.000	0.000	154.683

15

10	1.411	2.958	0.000	0.000	0.000	-236.190
11	-0.597	2.300	0.000	0.000	0.000	-90.197
12	-0.597	2.300	0.000	0.000	0.000	-90.197

```
{  106} > LOAD LIST 10
{  107} > LIST SECT DISPL MEM 8 9

   ****************************
   *RESULTS OF LATEST ANALYSES*
   ****************************

    PROBLEM - J120255   TITLE - NONE GIVEN

    ACTIVE UNITS  INCH KIP  DEG  DEGF SEC

    INTERNAL MEMBER RESULTS
    -----------------------

     MEMBER DISPLACEMENTS - Local coordinate system
```

--- MEMBER 8 ---

LOADING 10 DL + HL

/---DISTANCE FROM START---/	/---MEMBER X DISPLACEMENT---/	/---MEMBER Y DISPLACEMENT---/	/---MEMBER Z DISPLACEMENT---/
0.000 FR	0.000	0.000	
0.100	0.000	0.000	
0.200	0.000	0.000	
0.300	0.000	0.000	
0.400	0.000	0.001	
0.500	0.000	0.001	
0.600	0.000	0.001	
0.700	0.000	0.002	
0.800	0.000	0.002	
0.900	0.000	0.001	
1.000	0.000	0.000	

--- MEMBER 9 ---

LOADING 10 DL + HL

/---DISTANCE FROM START---/	/---MEMBER X DISPLACEMENT---/	/---MEMBER Y DISPLACEMENT---/	/---MEMBER Z DISPLACEMENT---/
0.000 FR	0.000	0.000	
0.100	0.000	-0.001	
0.200	0.000	-0.002	
0.300	0.000	-0.004	
0.400	0.000	-0.005	
0.500	0.000	-0.007	
0.600	0.000	-0.008	
0.700	0.000	-0.010	
0.800	0.000	-0.012	
0.900	0.000	-0.014	
1.000	0.000	-0.016	

```
{  108} > LIST SECT FOR

   ****************************
   *RESULTS OF LATEST ANALYSES*
   ****************************

    PROBLEM - J120255   TITLE - NONE GIVEN

    ACTIVE UNITS  INCH KIP  DEG  DEGF SEC

    INTERNAL MEMBER RESULTS
    -----------------------

     MEMBER SECTION FORCES
```

--- MEMBER 1 ---

LOADING 10 DL + HL

DISTANCE FROM START	/---------- FORCE ----------//---------- MOMENT ----------/ AXIAL	Y SHEAR	Z SHEAR	TORSION	Y BENDING	Z BENDING
0.000 FR	-0.667	-0.311				0.000
0.100	-0.664	-0.282				0.192
0.200	-0.660	-0.253				0.365
0.300	-0.657	-0.224				0.520
0.400	-0.654	-0.196				0.656
0.500	-0.651	-0.168				0.774
0.600	-0.647	-0.140				0.874
0.700	-0.644	-0.112				0.955
0.800	-0.641	-0.085				1.019
0.900	-0.638	-0.058				1.065
1.000	-0.634	-0.031				1.094

--- MEMBER 2 ---

16

LOADING 10 DL + HL

DISTANCE FROM START	FORCE AXIAL	FORCE Y SHEAR	FORCE Z SHEAR	MOMENT TORSION	MOMENT Y BENDING	MOMENT Z BENDING
0.000 FR	-0.634	-0.031				1.094
0.100	-0.633	-0.018				1.101
0.200	-0.631	-0.006				1.105
0.300	-0.630	0.006				1.105
0.400	-0.628	0.019				1.101
0.500	-0.627	0.031				1.094
0.600	-0.625	0.043				1.083
0.700	-0.624	0.055				1.068
0.800	-0.622	0.067				1.050
0.900	-0.621	0.079				1.028
1.000	-0.619	0.091				1.002

--- MEMBER 3 ---

LOADING 10 DL + HL

DISTANCE FROM START	FORCE AXIAL	FORCE Y SHEAR	FORCE Z SHEAR	MOMENT TORSION	MOMENT Y BENDING	MOMENT Z BENDING
0.000 FR	-0.619	-0.088				1.002
0.100	-0.613	-0.039				1.081
0.200	-0.607	0.009				1.100
0.300	-0.601	0.056				1.059
0.400	-0.594	0.103				0.959
0.500	-0.588	0.148				0.802
0.600	-0.582	0.192				0.590
0.700	-0.575	0.236				0.322
0.800	-0.569	0.278				0.000
0.900	-0.563	0.320				-0.374
1.000	-0.557	0.361				-0.800

--- MEMBER 4 ---

LOADING 10 DL + HL

DISTANCE FROM START	FORCE AXIAL	FORCE Y SHEAR	FORCE Z SHEAR	MOMENT TORSION	MOMENT Y BENDING	MOMENT Z BENDING
0.000 FR	-0.557	-0.224				-0.800
0.100	-0.550	-0.185				-0.544
0.200	-0.544	-0.146				-0.338
0.300	-0.538	-0.108				-0.180
0.400	-0.532	-0.071				-0.068
0.500	-0.525	-0.034				-0.003
0.600	-0.519	0.001				0.018
0.700	-0.513	0.035				-0.004
0.800	-0.506	0.068				-0.069
0.900	-0.500	0.101				-0.175
1.000	-0.494	0.132				-0.321

--- MEMBER 5 ---

LOADING 10 DL + HL

DISTANCE FROM START	FORCE AXIAL	FORCE Y SHEAR	FORCE Z SHEAR	MOMENT TORSION	MOMENT Y BENDING	MOMENT Z BENDING
0.000 FR	-0.494	-0.177				-0.321
0.100	-0.488	-0.146				-0.119
0.200	-0.481	-0.117				0.045
0.300	-0.475	-0.088				0.173
0.400	-0.469	-0.060				0.265
0.500	-0.463	-0.033				0.324
0.600	-0.456	-0.007				0.349
0.700	-0.450	0.018				0.342
0.800	-0.444	0.042				0.304
0.900	-0.438	0.065				0.237
1.000	-0.431	0.088				0.141

--- MEMBER 6 ---

LOADING 10 DL + HL

DISTANCE FROM START	FORCE AXIAL	FORCE Y SHEAR	FORCE Z SHEAR	MOMENT TORSION	MOMENT Y BENDING	MOMENT Z BENDING
0.000 FR	-0.431	0.046				0.141
0.100	-0.425	0.067				0.070
0.200	-0.419	0.088				-0.027
0.300	-0.412	0.107				-0.150
0.400	-0.406	0.126				-0.296
0.500	-0.400	0.144				-0.464
0.600	-0.394	0.161				-0.655
0.700	-0.387	0.176				-0.865
0.800	-0.381	0.191				-1.095
0.900	-0.375	0.205				-1.344
1.000	-0.369	0.219				-1.609

--- MEMBER 7 ---

LOADING 10 DL + HL

DISTANCE /---------- FORCE ----------//---------- MOMENT ----------/

17

FROM START	AXIAL	Y SHEAR	Z SHEAR	TORSION	Y BENDING	Z BENDING
0.000 FR	-0.369	-0.194				-1.609
0.100	-0.362	-0.181				-1.362
0.200	-0.355	-0.169				-1.131
0.300	-0.349	-0.158				-0.915
0.400	-0.342	-0.148				-0.713
0.500	-0.335	-0.140				-0.523
0.600	-0.329	-0.132				-0.343
0.700	-0.322	-0.125				-0.174
0.800	-0.316	-0.120				-0.012
0.900	-0.309	-0.115				0.143
1.000	-0.302	-0.111				0.292

--- MEMBER 8 ---

LOADING 10 DL + HL

DISTANCE FROM START	/---------- FORCE ----------//---------- MOMENT ----------/ AXIAL	Y SHEAR	Z SHEAR	TORSION	Y BENDING	Z BENDING
0.000 FR	-0.302	-0.111				0.292
0.100	-0.205	-0.066				2.016
0.200	-0.107	-0.020				2.855
0.300	-0.010	0.025				2.809
0.400	0.088	0.071				1.878
0.500	0.186	0.116				0.063
0.600	0.283	0.162				-2.637
0.700	0.381	0.207				-6.221
0.800	0.478	0.253				-10.691
0.900	0.576	0.298				-16.045
1.000	0.673	0.344				-22.283

--- MEMBER 9 ---

LOADING 10 DL + HL

DISTANCE FROM START	/---------- FORCE ----------//---------- MOMENT ----------/ AXIAL	Y SHEAR	Z SHEAR	TORSION	Y BENDING	Z BENDING
0.000 FR	-0.744	-0.347				-22.283
0.100	-0.697	-0.325				-19.136
0.200	-0.650	-0.303				-16.194
0.300	-0.603	-0.281				-13.456
0.400	-0.556	-0.259				-10.925
0.500	-0.509	-0.237				-8.598
0.600	-0.462	-0.216				-6.476
0.700	-0.415	-0.194				-4.560
0.800	-0.368	-0.172				-2.849
0.900	-0.321	-0.150				-1.343
1.000	-0.274	-0.128				-0.042

--- MEMBER 10 ---

LOADING 10 DL + HL

DISTANCE FROM START	/---------- FORCE ----------//---------- MOMENT ----------/ AXIAL	Y SHEAR	Z SHEAR	TORSION	Y BENDING	Z BENDING
0.000 FR	-0.030	-0.014				-0.042
0.100	-0.027	-0.013				-0.034
0.200	-0.024	-0.011				-0.027
0.300	-0.021	-0.010				-0.021
0.400	-0.018	-0.008				-0.015
0.500	-0.015	-0.007				-0.011
0.600	-0.012	-0.006				-0.007
0.700	-0.009	-0.004				-0.004
0.800	-0.006	-0.003				-0.002
0.900	-0.003	-0.001				0.000
1.000	0.000	0.000				0.000

{ 109} >
{ 110} >
{ 111} >
{ 111} >

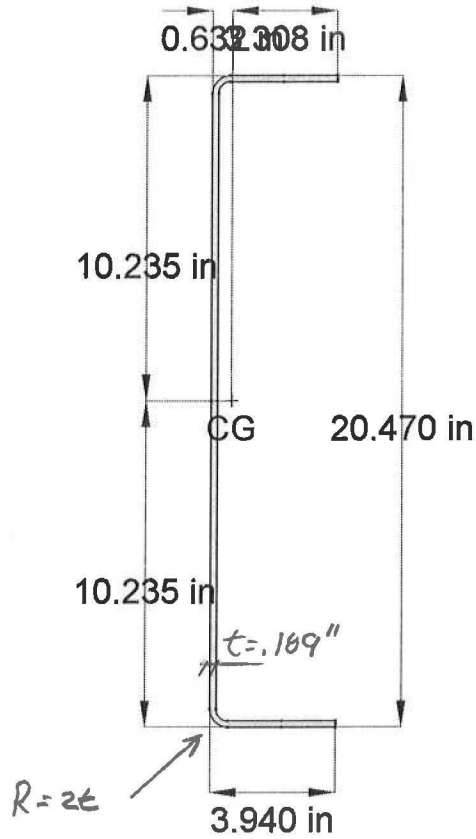

316L

Overall Dimensions	
Width	3.940 in
Height	20.470 in
Perimeter	55.460 in
Geometric Properties	
Iy	5.670 in^4
Ix	272.789 in^4
J	0.061 in^4
ry	1.043 in
rx	7.236 in
A	5.210 in^2
Sy Right	1.714 in^3
Sy Left	8.966 in^3
Sx Bottom	26.653 in^3
Sx Top	26.653 in^3
Centroid Y	-0.110 in
Centroid X	-1.803 in
Material Properties	
E	29000.000 Ksi
Plastic Properties	
Zy	2.950 in^3
Zx	33.386 in^3
PNA-Y	-0.110 in
PNA-X	-2.304 in

Polar Properties	
Ip	278.459 in^4
rp	7.311 in
Principal Properties	
I2	5.670 in^4
I1	272.789 in^4
Ixy	0.000 in^4
Theta	180.000 deg

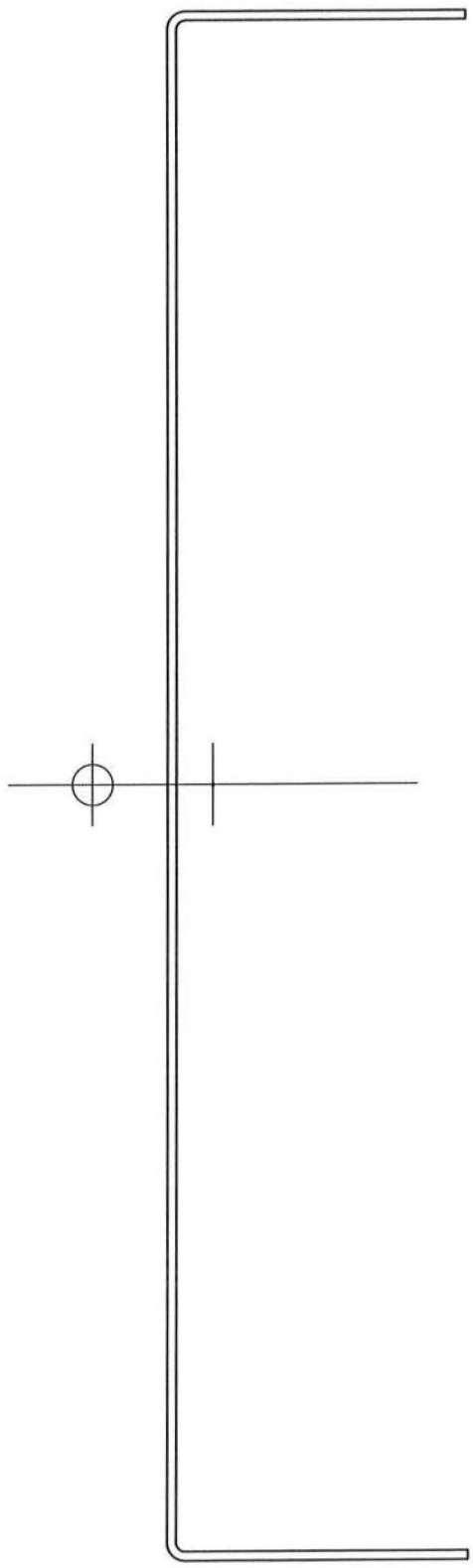

Section Inputs

Material: A1008 SS Grade 25
No strength increase from cold work of forming.

Modulus of Elasticity, E	29500 ksi
Yield Strength, Fy	25 ksi
Tensile Strength, Fu	42 ksi
Warping Constant Override, Cw	0 in^6
Torsion Constant Override, J	0 in^4

Channel, Thickness 0.12 in
Placement of Part from Origin:

X to center of gravity	0 in
Y to center of gravity	0 in

Outside dimensions, Open shape

	Length (in)	Angle (deg)	Radius (in)	Web	k Coef.	Hole Size (in)	Distance (in)
1	3.940	180.000	0.12000	Single	0.000	0.000	1.970
2	20.470	90.000	0.12000	Cee	0.000	0.000	10.235
3	3.940	0.000	0.12000	Single	0.000	0.000	1.970

Member Check - 2007 North American Specification - US (ASD)

Material Type: A1008 SS Grade 25, Fy=25 ksi
Design Parameters:

Lx	22.000 ft	Ly	16.200 ft	Lt	0.000 ft
Kx	1.0000	Ky	1.0000	Kt	1.0000
Cbx	1.0000	Cby	1.0000	ex	0.0000 in
Cmx	1.0000	Cmy	1.0000	ey	0.0000 in

Braced Flange: None Red. Factor, R: 0 Stiffness, kϕ: 0 k

Loads:	P (k)	Mx (k-in)	Vy (k)	My (k-in)	Vx (k)
Entered	2.0000	23.00	0.0000	0.00	0.0000
Applied	2.0000	23.00	0.0000	0.00	0.0000
Strength	9.6577	187.60	7.6922	5.42	8.3250

Effective section properties at applied loads:

Ae	3.3547 in^2	Ixe	178.76 in^4	Iye	3.70 in^4
		Sxe(t)	17.465 in^3	Sye(l)	6.186 in^3
		Sxe(b)	17.465 in^3	Sye(r)	1.108 in^3

Interaction Equations

NAS Eq. C5.2.1-1	(P, Mx, My)	0.207 + 0.123 + 0.000 = 0.330 <= 1.0
NAS Eq. C5.2.1-2	(P, Mx, My)	0.099 + 0.123 + 0.000 = 0.222 <= 1.0
NAS Eq. C3.3.1-1	(Mx, Vy)	Sqrt(0.015 + 0.000)= 0.123 <= 1.0
NAS Eq. C3.3.1-1	(My, Vx)	Sqrt(0.000 + 0.000)= 0.000 <= 1.0

COMPUTERIZED
STRUCTURAL
DESIGN, S.C.
CONSULTING ENGINEERS
8989 N. Port Washington Rd.
Milwaukee, WI 53217-1633
414-351-5588 FAX 414-351-4617

FILTER SCREEN DESIGN

COMPUTERIZED STRUCTURAL DESIGN, S.C.
CONSULTING ENGINEERS
8989 N. Port Washington Rd.
Milwaukee, WI 53217-1633
414-351-5588 FAX 414-351-4617

FILTER SCREEN

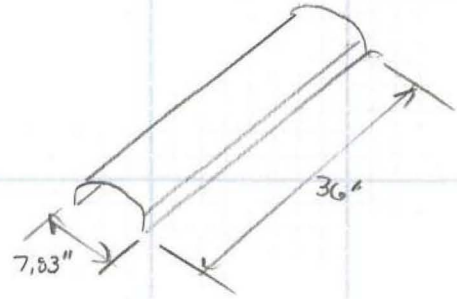

→ SCREEN WIDTH = 7.83"

$$P = \frac{5.5ft\,(62.4pcf)}{144} = 2.38\ lb/in^2$$

$$w = 7.83in\,(2.38\ lb/in^2) = 18.66\ lb/in$$

→ SCREEN LENGTH ≅ 36 in

$$V = \frac{18.66\ lb/in\,(36\ in)}{2\,(1000)} = 0.34K$$

$$M = \frac{18.66\ lb/in\,(36\ in)^2}{8\,(1000)} = 3.02\ kin$$

ASD

$$\delta = \frac{5\,(18.66\ lb/in)(36in^4)}{384(29{,}500{,}000)(0.45in^4)} = 0.03\ in < 1/8''\ \underline{ok}$$

$\phi M_n = 6.5\ kin$

$M_U \cong 1.6(3.02) = 4.83\ kin < 6.5\ kin$ ok

$\phi V_n = 2.42K$

$V_U \cong 0.34(1.6) = 0.54K < 2.42K$ ok

COMPUTERIZED STRUCTURAL DESIGN, S.C.
CONSULTING ENGINEERS
8989 N. Port Washington Road
Milwaukee, WI 53217-1633
414-351-5588 FAX 414-351-4617

1/8" Filter Screen

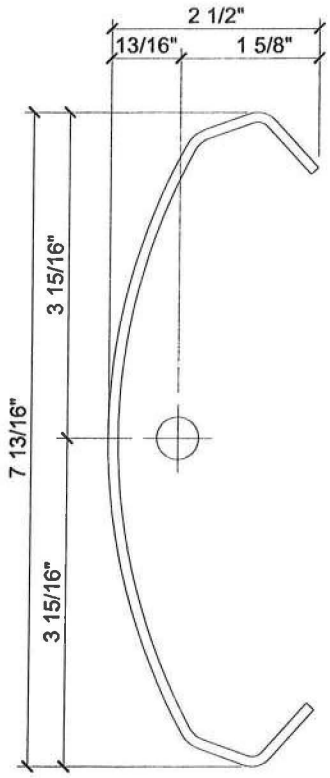

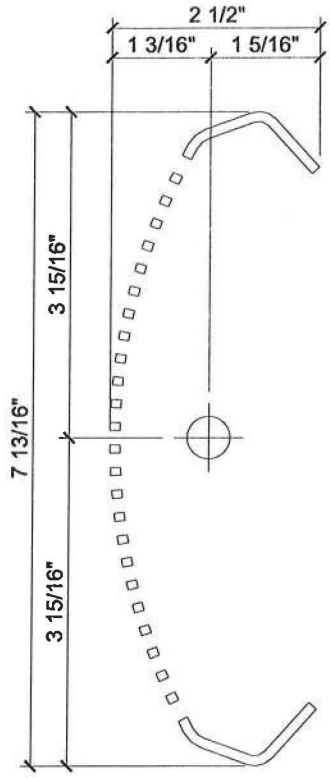

---------- SOLIDS ----------

Mass: 1.29966187 lb
Volume: 1.29966187 cu in
Bounding box: X: -0.82578126 -- 1.65453370 in
Y: -3.91753048 -- 3.91753448 in
Z: 0.00000000 -- 1.00000000 in
Centroid: X: -0.00000036 in
Y: 0.00000200 in
Z: 0.50000000 in
Moments of inertia: X: 9.86260317 lb sq in
Y: 1.13303760 lb sq in
Z: 10.12919952 lb sq in
Products of inertia: XY: 0.00000000 lb sq in
YZ: 0.00000130 lb sq in
ZX: -0.00000024 lb sq in
Radii of gyration: X: 2.75473984 in
Y: 0.93369917 in
Z: 2.79172332 in
Principal moments (lb sq in) and X-Y-Z directions about centroid:
I: 9.53768770
J: 0.80812213
K: 10.12919952

---------- REGIONS ----------

Area: 0.75501885 sq in
Perimeter: 18.92670641 in
Bounding box: X: -1.16928732 -- 1.31049573 in
Y: -3.91753048 -- 3.91755637 in
Centroid: X: 0.00000000 in
Y: 0.00000000 in
Moments of inertia: X: 7.22931069 sq in sq in
Y: 0.44998940 sq in sq in ← $I_y \approx 0.45\ in^4$
Product of inertia: XY: 0.00000766 sq in sq in
Radii of gyration: X: 3.09435081 in
Y: 0.77200879 in
Principal moments (sq in sq in) and X-Y directions about centroid:
I: 0.44998940
J: 7.22931069

COMPUTERIZED
STRUCTURAL
DESIGN, S.C.
CONSULTING ENGINEERS
8989 N. Port Washington Road
Milwaukee, WI 53217-1633
414-351-5588 FAX 414-351-4617

Project WENATCHEE WWTP
Job No. J120255 By MAE
Date Page 24 of

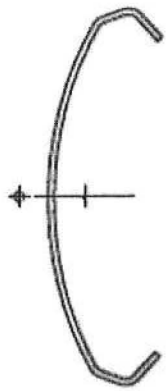

Section Inputs

Material: A611 Grade A
No strength increase from cold work of forming.

Modulus of Elasticity, E	29500	ksi
Yield Strength, Fy	25	ksi
Tensile Strength, Fu	42	ksi
Warping Constant Override, Cw	0	in^6
Torsion Constant Override, J	0	in^4

Part 1, Thickness 0.125 in
Placement of Part from Origin:

X to center of gravity	0	in
Y to center of gravity	0	in

Outside dimensions, Open shape

	Length (in)	Angle (deg)	Radius (in)	Web	k Coef.	Hole Size (in)	Distance (in)
1	0.87500	132.000	0.23600	None	0.000	0.00000	0.43750
2	0.81250	200.000	0.23600	None	0.000	0.00000	0.40625
3	0.50000	242.000	0.23600	None	0.000	0.00000	0.25000
4	0.50000	246.000	0.23600	None	0.000	0.00000	0.25000
5	0.50000	250.000	0.23600	None	0.000	0.00000	0.25000
6	0.50000	254.000	0.23600	None	0.000	0.00000	0.25000
7	0.50000	258.000	0.23600	None	0.000	0.00000	0.25000
8	0.50000	262.000	0.23600	None	0.000	0.00000	0.25000
9	0.50000	266.000	0.23600	None	0.000	0.00000	0.25000
10	0.31250	269.000	0.23600	None	0.000	0.00000	0.15625
11	0.31250	271.000	0.23600	None	0.000	0.00000	0.15625
12	0.50000	274.000	0.23600	None	0.000	0.00000	0.25000
13	0.50000	278.000	0.23600	None	0.000	0.00000	0.25000
14	0.50000	282.000	0.23600	None	0.000	0.00000	0.25000
15	0.50000	286.000	0.23600	None	0.000	0.00000	0.25000
16	0.50000	290.000	0.23600	None	0.000	0.00000	0.25000
17	0.50000	294.000	0.23600	None	0.000	0.00000	0.25000
18	0.50000	298.000	0.23600	None	0.000	0.00000	0.25000
19	0.81250	340.000	0.23600	None	0.000	0.00000	0.40625
20	0.87500	48.000	0.23600	None	0.000	0.00000	0.43750

COMPUTERIZED STRUCTURAL DESIGN, S.C.
CONSULTING ENGINEERS
8989 N. Port Washington Road
Milwaukee, WI 53217-1633
414-351-5588 FAX 414-351-4617

Project WENATCHEE WWTP
Job No. J120255 By MAE
Date Page 25 of

CFS Version 5.0.3
Section: 1_8FilterScreen.sct

James Gerloff
Computerized Structural Design, S.C.

Rev. Date: 4/9/2010 2:15:20 PM
By: James Gerloff

Full Section Properties

Area	1.3196 in^2	Wt.	0.0044866 k/ft	Width	10.557 in
Ix	9.174 in^4	rx	2.6367 in	Ixy	0.000 in^4
Sx(t)	2.3763 in^3	y(t)	3.8605 in	α	0.000 deg
Sx(b)	2.3763 in^3	y(b)	3.8605 in		
		Height	7.7211 in		
Iy	0.594 in^4	ry	0.6708 in	Xo	-1.3453 in
Sy(l)	0.7859 in^3	x(l)	0.7555 in	Yo	0.0000 in
Sy(r)	0.3820 in^3	x(r)	1.5542 in	jx	4.9890 in
		Width	2.3097 in	jy	0.0000 in
I1	9.174 in^4	r1	2.6367 in		
I2	0.594 in^4	r2	0.6708 in		
Ic	9.768 in^4	rc	2.7207 in	Cw	2.7421 in^6
Io	12.156 in^4	ro	3.0351 in	J	0.0068728 in^4

Fully Braced Strength - 2004 North American Specification - US (LRFD)

Compression		Positive Moment		Positive Moment	
ϕPno	28.041 k	ϕMnxo	56.438 k-in	ϕMnyo	8.596 k-in
Ae	1.3196 in^2	Ixe	9.1739 in^4	Iye	0.5938 in^4
		Sxe(t)	2.3763 in^3	Sye(l)	0.7859 in^3
Tension		Sxe(b)	2.3763 in^3	Sye(r)	0.3820 in^3
ϕTn	29.691 k				
		Negative Moment		Negative Moment	
		ϕMnxo	56.438 k-in	ϕMnyo	8.596 k-in
Shear		Ixe	9.1739 in^4	Iye	0.5938 in^4
ϕVny	0.000 k	Sxe(t)	2.3763 in^3	Sye(l)	0.7859 in^3
ϕVnx	0.000 k	Sxe(b)	2.3763 in^3	Sye(r)	0.3820 in^3

For Reduced Section:

Ix3 = 9.1739 * 7.2293 / 9.174 = 7.23 in^4
Iye = 0.5938 * 0.4500 / 0.594 = 0.45 in^4
ϕMnxo = 56.438 * 7.2293 / 9.174 = 44.42 k-in
ϕMnyo = 8.596 * 0.4500 / 0.594 = 6.51 k-in

COMPUTERIZED STRUCTURAL DESIGN, S.C.
CONSULTING ENGINEERS
8989 N. Port Washington Rd.
Milwaukee, WI 53217-1633
414-351-5588 FAX 414-351-4617

Project WENATCHEE WWTP
Job No. J120255 By MAE
Date Page 260 of

4/4/2012 2:04 PM

SHEAR STRENGTH BASED ON AISI 2007

Input

h (in) =	1.4
thickness, t (in) =	0.1250
a (in.) =	
Fy (ksi) =	25
E (ksi) =	29000
a/h =	0.00
h/t =	10.9
Aw (in^2) =	0.170

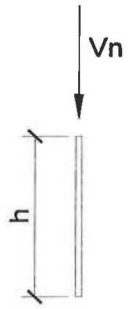

Shear Strength per Section C3.2.1

ϕv (LRFD) =	0.95	
Ωv (ASD) =	1.6	
Unreinforced Webs		
kv =	5.34	Eq. C3.2.1-6
Fv (ksi) =	15.00	Eq. C3.2.1-2
Vn (k) =	2.55	Eq. C3.2.1-1
ϕVn (k) =	**2.42**	
Vn / Ω (k) =	1.59	

COMPUTERIZED STRUCTURAL DESIGN, S.C.
CONSULTING ENGINEERS
8989 N. Port Washington Rd.
Milwaukee, WI 53217-1633
414-351-5588 FAX 414-351-4617

ANCHORAGE DESIGN

ASSUMPTIONS:

- $f'_c = 3000$ psi MIN
- $t_{SLAB} \geq 9''$
- EDGE REINF. AROUND OPENING
- SCREEN BEARS ON GROUTED SURFACE IN CHANNEL PRIOR TO ANCHORAGE
- USE OF STAINLESS STEEL ROD TO BE VERIFIED BY EOR
- HILTI HIT-RE 500 SD EPOXY, INSTALLED PER HILTI AND ESR 2322

COMPUTERIZED STRUCTURAL DESIGN, S.C.
CONSULTING ENGINEERS
8989 N. Port Washington Rd.
Milwaukee, WI 53217-1633
414-351-5588 FAX 414-351-4617

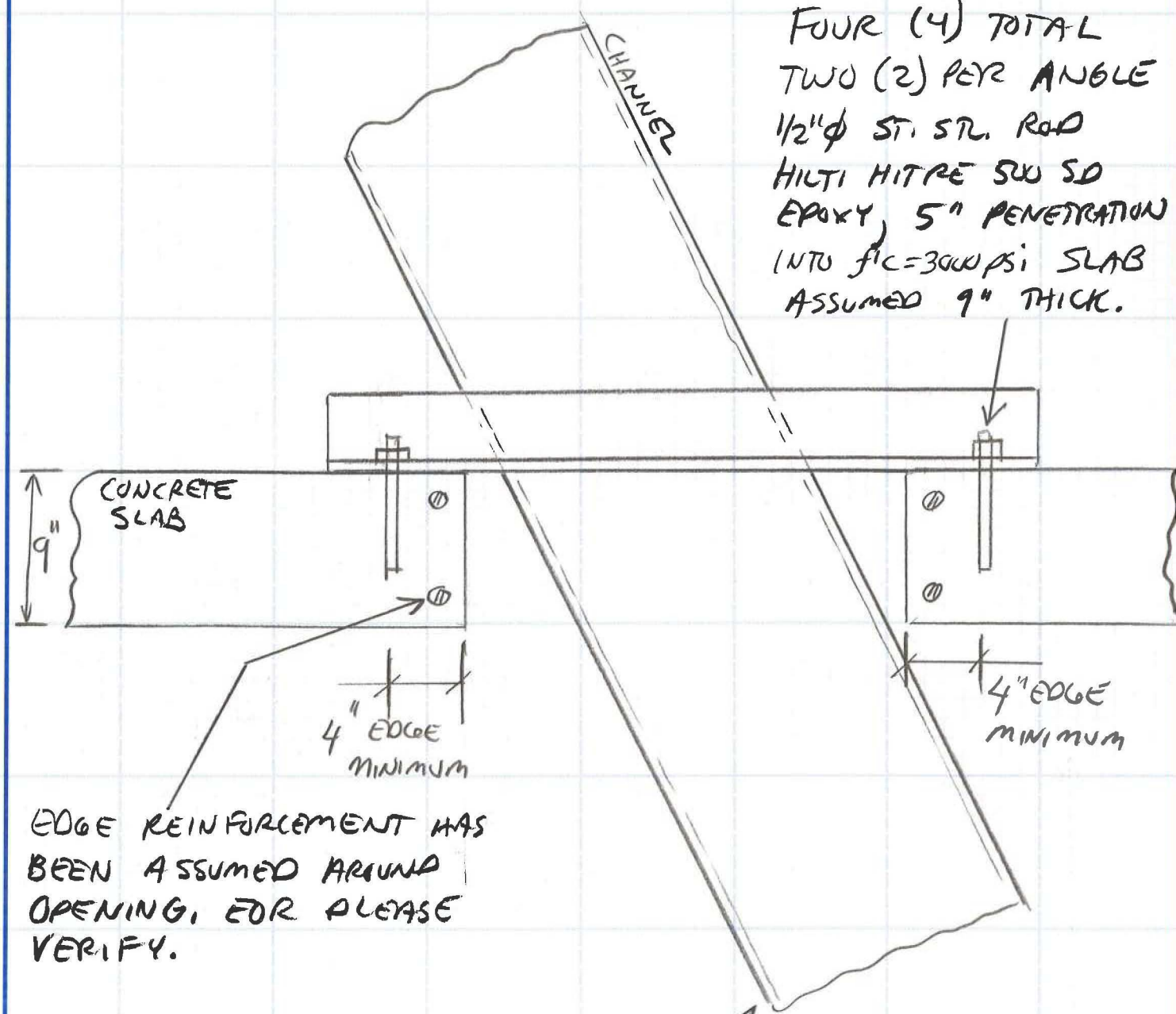

FOUR (4) TOTAL
TWO (2) PER ANGLE
1/2"ϕ ST. STL. ROD
HILTI HIT-RE 500 SD
EPOXY, 5" PENETRATION
INTO f'c=3000 psi SLAB
ASSUMED 9" THICK.

EDGE REINFORCEMENT HAS BEEN ASSUMED AROUND OPENING. FOR PLEASE VERIFY.

IT HAS BEEN ASSUMED THAT THE SCREEN IS BEARING IN CHANNEL PRIOR TO SLAB ANCHORAGE BEING PLACED.

COMPUTERIZED STRUCTURAL DESIGN, S.C.
CONSULTING ENGINEERS
6989 N. Port Washington Rd.
Milwaukee, WI 53217-1633
414-351-5588 FAX 414-351-4617

Calculations Based on ESR-2322 (Reissued July 1, 2009) Subject to re-examination in one year. 4/6/2012 8:07 AM

ACI 318-05 Load Combinations: Section 9.2

N_{ua} = 0.00 k
V_{ua} = 0.60 k

Concrete Properties
f'_c = 3000 psi
Normal Weight
λ = 1
h (thick) = 9 in

Anchorage Properties
hmin = 6.25 in
hefmax = 10 in
smin = 2.5 in
cmin = 2.5 in

Hilti HIT-RE 500-SD

Material: ASTM F593, CW Stainless
Name: 1/2" dia.
Steel Element: Brittle
Anchor Dia., d_o (in.)= 1/2
Embedment, h_{ef} (in.) = 5.00
$h_{ef\,min}$ (in.) = 2.00
Temperature Range: A
Anchors Welded to PL? No
Anchors in Tension = 1
Anchors in Shear = 1

Seismic Design Category (IBC): C, D, E or F
Seismic Factor: 0.75
Supplementary / Confinement Reinforcement? No
Concrete Cracked @ Service Load Levels? No
Installation Conditions: Water-Saturated
Hole Type: Hammer Drilled
Short Term Loading? No
Sustained tension Loading? No

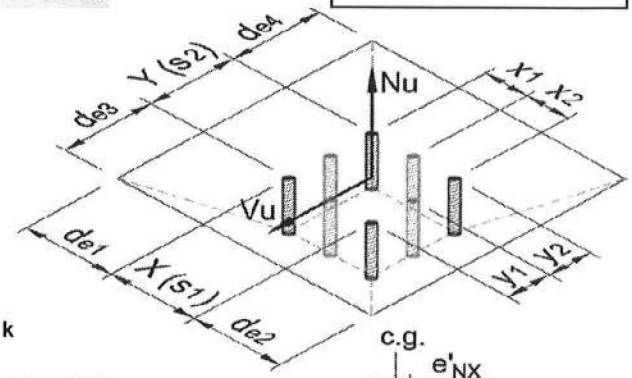

D.5 Tension Loading ϕN_n = 3.20 k

D.5.1 Steel Strength ϕ = 0.65

n = 1
N_{sa} = 14.19 k $1.5 * h_{ef}$ = 7.50
$n * N_{sa}$ = 14.19 k
ϕN_{sa} = 9.22 k

D.5.2 Breakout Strength ϕ = 0.65 ϕN_c = 3.20 k

h'_{ef} = 5.00 in (Section D.5.2.3)
A_{Nc} = 172.50 in^2
A_{Nco} = 225.00 in^2 (Eq. D-6)
$\Psi_{ec,N\,(x)*(y)}$ = 1.00 (Eq. D-9 for x and y)
$\Psi_{ed,N}$ = 0.86 (Eq. D-10 & D-11)
$\Psi_{c,N}$ = 1.00 (Section D.5.2.6)
c_{ac} = 8.93 (Section 4.1.10)
$\Psi_{cp,N}$ = 0.84 (Eq. D-12 & D-13)
k_c = 24.00 Table 8 or 24
N_b = 14.70 (Eq. D-7)
N_{cb} or N_{cbg} = 8.140 (Eq. D-4 & D-5)
ϕN_{cb} or ϕN_{cbg} = 5.29 k

X (s1) = 0 in
Y (s2) = 0 in
d_{e1} = 12.00 in
d_{e2} = 12.00 in
d_{e3} = 4.00 in (Edge)
d_{e4} = 12.00 in
$c_{a,min}$ = 4.00 in
$c_{a,max}$ = NA in

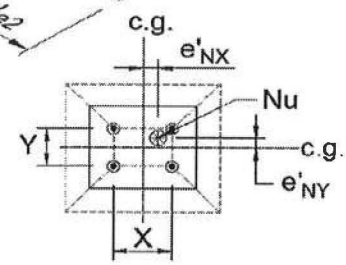

Eccentricity per D.5.2.4

e'_{NX} = in
$\Psi_{ec,N\,(x)}$ = 1.00 (Eq. D-9)
$\Psi_{ec,Na\,(x)}$ = 1.00 (Eq. D-16j)

e'_{NY} = in
$\Psi_{ec,N\,(y)}$ = 1.00 (Eq. D-9)
$\Psi_{ec,Na\,(y)}$ = 1.00 (Eq. D-16j)

D.5.3.7 Bond Strength ϕ_{nn} = 0.55 Table 9, 10, 25 or 26

A_{Na} = 126.73 in^2
A_{Nao} = 154.14 in^2 (Eq. D-16c)
$\Psi_{ec,Na\,(x)*(y)}$ = 1.00 (Eq. D-16j for x and y)
$\Psi_{ed,Na}$ = 0.89 (Eq. D-16l & D-16m)
$\Psi_{g,Na0}$ = 1.00 (Eq. D-16h)
$\Psi_{g,Na}$ = 1.00 (Eq. D-16g)
$\Psi_{p,Na}$ = 0.70 (Eq. D-16o & D-16p)
N_{a0} = 11.41 k (Eq. D-16f & Sec. D4.1.4)
N_a or N_{ag} = 5.83 (Eq. D-16a or D-16b)
ϕN_a or ϕN_{ag} = 3.20 k

S = 4 in
κ_{nn} = 1 Table 9, 10, 25 or 26
τ_k = 2235 Table 9, 10, 25 or 26
$\alpha_{N,seis}$ = 0.65 Table 9 or 10
$\tau_k * \kappa_{nn} * \alpha_{N,seis}$ = 1452.75
$\tau_{k,max}$ = 1871 in (Eq. D-16i or D-16n)
$h_{ef,min}$ = 2 Table 9, 10, 25 or 26
$s_{cr,Na}$ = 12.42 in (Eq. D-16d)
$c_{cr,Na}$ = 6.21 in (Eq. D-14e)
smin = 2.5 in (Table 8 or 24)

COMPUTERIZED STRUCTURAL DESIGN, S.C.
CONSULTING ENGINEERS
8989 N. Port Washington Rd.
Milwaukee, WI 53217-1633
414-351-5588 FAX 414-351-4617

Calculations Based on ESR-2322 (Reissued July 1, 2009) Subject to re-examination in one year. 4/6/2012 8:07 AM

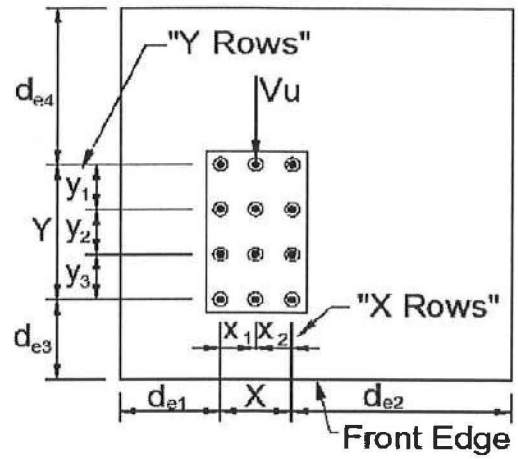

D.6 Shear Loading $\phi Vn =$ **3.22** k

D.6.1 Steel Strength $\phi =$ 0.60

Built-up Grout Pad?	No	
n =	1	
V_{sa} =	8.52	k
Grout Pad Factor:	1	(Section D6.1.3)
$\alpha_{V,seis}$ =	0.7	Table 7 or 23
$n * V_{sa} * \alpha_{V,seis}$ =	5.96	k (Eq. D-19)
ϕVsa =	**3.58**	**k**

D.6.2 Breakout Strength $\phi =$ 0.70 $\phi Vc =$ **3.22** k

Front Edge Breakout

.1 (a) and (b) Vn based on farthest most anchor(s)

c_{a1} =	4.00	in						
$1.5 * c_{a1}$ =	6.00	in	h_a =	9	in	n_x =	1	
c'_{a1} =	4.00	in	X =	0	in	x =	0	in
A_{Vc} =	72.00	in^2	Y =	0	in	n_y =	1	
A_{Vco} =	72.00	in^2 (Eq. D-23)	d_{e1} =	12	in	y =	0	in
l_e (h_{ef}) =	4.00	Section 4.1.6 or D.6.2.2	d_{e2} =	12	in			
V_b =	3.29	k (Eq. D-24)	d_{e3} =	4	in			
$\Psi_{c,V}$ =	1.40	Section D.6.2.7	d_{e4} =	12	in			
			$c_{a2,max}$ =	NA	in			

.1 (a) Force ⊥ to Edge (Single Anchor) **Consider**

$\Psi_{ed,V}$ =	1.00	(Eq. D-27 or D-28)
V_{cb} =	4.60	k (Eq. D-21)

Eccentricity per D.6.2.5

e'_V =	0	in	
$\Psi_{ec,V}$ =	1.00		(Eq. D-26)

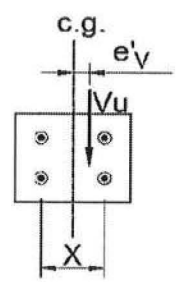

.1 (b) Force ⊥ to Edge (Group) **N/A**

V_{cbg} =	4.60	k (Eq. D-22)

Side Edge Breakout

.1 (c) Vn based on farthest most anchor(s)

c_{a1} =	12.00	in	h_a =	9	in (Edge)	n_x =	1	
$1.5 * c_{a1}$ =	18.00	in	X =	0	in	x =	0.00	in
c'_{a1} =	8.00	in	Y =	0	in	n_y =	1	
A_{Vc} =	144.00	in^2	d_{e1} =	4	in (Edge)	y =	0	in
A_{Vco} =	288.00	in^2 (Eq. D-23)	d_{e2} =	12	in (Edge)			
l_e (h_{ef}) =	4.00	Section D.6.2.2	d_{e3} =	12	in			
V_b =	9.30	k (Eq. D-24)	d_{e4} =	12	in			
$\Psi_{c,V}$ =	1.40	Section D.6.2.7	$c_{a2,max}$ =	12	in			

Force || to Edge (Single Anchor) per .1 (a) **Consider**

$\Psi_{ed,V}$ =	1.00	See Section D.6.2.1(c)
V_{cb} =	6.51	k (Eq. D-21)
$2 \cdot V_{cb}$ =	13.02	See Section D.6.2.1(c)

Force || to Edge (Group) per .1 (b) **N/A**

$\Psi_{ec,V}$ =	1.00	(Eq. D-26)
V_{cbg} =	6.51	k (Eq. D-22)
$2 \cdot V_{cbg}$ =	13.02	See Section D.6.2.1(c)

COMPUTERIZED STRUCTURAL DESIGN, S.C.
CONSULTING ENGINEERS
8989 N. Port Washington Rd.
Milwaukee, WI 53217-1633
414-351-5588 FAX 414-351-4617

Calculations Based on ESR-2322 (Reissued July 1, 2009) Subject to re-examination in one year. 4/6/2012 8:07 AM

D.6.3 Pryout Strength ϕ = 0.70 "Condition B"

h_{ef} =	5.00	in	S =	6	in			
k_{cp} =	2.00		smin =	2.5	in (Table 8 or 24)			
h'_{ef} =	5.00	in (Section D.5.2.3)				X (s1) =	0	in
A_{Nc} =	172.50	in^2				Y (s2) =	0	in
A_{Nco} =	225.00	in^2 (Eq. D-6)	A_{Na} =	126.73	in^2	d_{e1} =	12	in
$\Psi_{ec,N}$ =	1.00	(Eq. D-9)	A_{Nao} =	154.14	in^2 (Eq. D-16c)	d_{e2} =	12	in
$\Psi_{ed,N}$ =	0.86	(Eq. D-10 & D-11)	$\Psi_{ec,Na}$ =	1.00	(Eq. D-16j)	d_{e3} =	4	in (Edge)
$\Psi_{c,N}$ =	1.00	(Section D.5.2.6)	$\Psi_{ed,Na}$ =	0.89	(Eq. D-16l & D-16m)	d_{e4} =	12	in
c_{ac} =	12.5	(Section 4.1.10)	$\Psi_{g,Na0}$ =	1.00	(Eq. D-16h)	$c_{a,min}$ =	4	in
$\Psi_{cp,N}$ =	0.60	(Eq. D-12 & D-13)	$\Psi_{g,Na}$ =	1.00	(Eq. D-16g)	$c_{a,max}$ =	NA	in
k_c =	24	Table 8 or 24	$\Psi_{p,Na}$ =	0.70	(Eq. D-16o & D-16p)	x, y_{max} =	0	in
N_b =	14.70	(Eq. D-7)	N_{a0} =	11.41	k (Eq. D-16f)			
N_{cb} or N_{cbg} =	5.81	(Eq. D-4 & D-5)	N_a or N_{ag} =	5.83	(Eq. D-16a or D-16b)			
V_{cp} or V_{cpg} =	11.63	(Eq. D-28a & D-28b)	V_{cp} or V_{cpg} =	11.65	(Eq. D-30a & D-30b)			

Eccentricity per D.5.2.4

e'_N =	0	in
$\Psi_{ec,N}$ =	1.00	(Eq. D-9)

ϕV_{cp} or ϕV_{cpg} = **8.14** k

Tension and Shear

ϕNs =	**9.22**	**k**	**ϕNc =**	**3.20**	**k <--Controls**
ϕVs =	**3.58**	**k**	**ϕVc =**	**3.22**	**k <--Controls**

Seismic Factor: 0.75

N_{ua} =	**0.00**	**k**	**0.75ϕNn =**	**2.40**	**k**	OK
V_{ua} =	**0.60**	**k**	**0.75ϕVn =**	**2.42**	**k**	OK

Anchorage is See Next Page

Tension and Shear Interaction

Nu /ϕNn =	0.00	**0.2 ϕNn =**	0.48
Vu /ϕVn =	0.25	**0.2 ϕVn =**	0.48

Interaction needs only meet equation D-31 or RD.7, not both.

Interaction Equation D-31	**NA**	OK
Interaction Equation RD.7	**NA**	OK

Ductility Requirement per IBC Section 1908.1.16 D.3.3.4

Anchors designed for 2.5 times the factored forces.

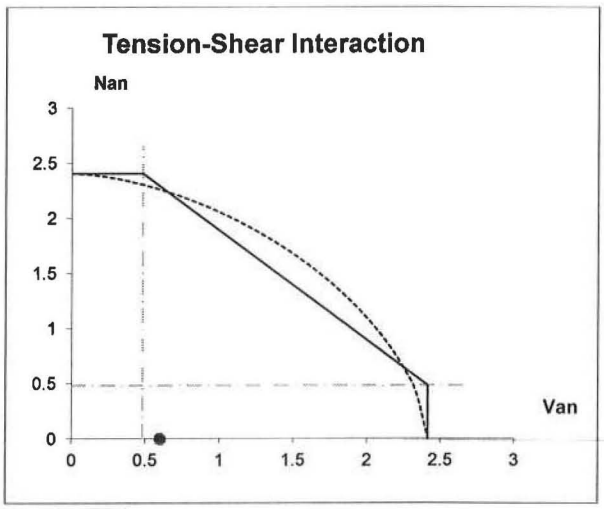

Spacing, Edge Distance to preclude splitting failure, ACI 318 D.8

Are anchors Torqued?		No		
Spacing	*Minimum center-to-center*	2.50	in	(Section 4.1.9)
	Maximum for group action	15.00	in	Tension
		15.00	in	Shear
Edge Distance, c_{min}		ACI 318	Section 7.7	
Edge Distance, c_{ac}		8.93	in	

COMPUTERIZED STRUCTURAL DESIGN, S.C.
CONSULTING ENGINEERS
8989 N. Port Washington Rd.
Milwaukee, WI 53217-1633
414-351-5588 FAX 414-351-4617

Calculations Based on ESR-2322 (Reissued July 1, 2009) Subject to re-examination in one year.

For Anchors Designed for 2.5 times the factored forces:

Failure Mode	N_n	ϕ	ϕN_n	ϕ_{seis}	$\phi_{seis}\phi N_n$	N_{ua}	$2.5N_{ua}$*	$\frac{2.5N_{ua}}{\phi_{seis}\phi N_n}$	
N_{sa}	14.19	0.65	9.22	0.75	6.92	0.00	0.00	0.000	OK
N_{cb} or N_{cbg}	8.14	0.65	5.29	0.75	3.97	0.00	0.00	0.000	OK
$n \cdot N_{ag}$	5.83	0.55	3.20	0.75	2.40	0.00	0.00	0.000	OK
Controlling Failure Mode:		**Nsa**			**6.92**	**0.00**	**0.00**	**0.000**	OK

* If Required, Not Required for Ductile Steel Elements

Failure Mode	V_n	ϕ	ϕV_n	ϕ_{seis}	$\phi_{seis}\phi V_n$	V_{ua}	$2.5V_{ua}$*	$\frac{2.5V_{ua}}{\phi_{seis}\phi V_n}$	
V_{sa}	5.96	0.60	3.58	0.75	2.68	0.60	1.50	0.559	OK
V_{cb}	4.60	0.70	3.22	0.75	2.42	0.60	1.50	0.621	OK
V_{cbg}	N/A	0.70	N/A	0.75	N/A	0.60	1.50	N/A	OK
$n_y \cdot V_{cb}$	4.60	0.70	3.22	0.75	2.42	0.60	1.50	0.621	OK
$n_y \cdot V_{cbg}$	N/A	0.70	N/A	0.75	N/A	0.60	1.50	N/A	OK
$2 \cdot V_{cb}$	13.02	0.70	9.11	0.75	6.83	0.60	1.50	0.219	OK
$2 \cdot V_{cbg}$	N/A	0.70	N/A	0.75	N/A	0.60	1.50	N/A	OK
$2 \cdot n_y \cdot V_{cb}$	13.02	0.70	9.11	0.75	6.83	0.60	1.50	0.219	OK
$2 \cdot n_y \cdot V_{cbg}$	N/A	0.70	N/A	0.75	N/A	0.60	1.50	N/A	OK
V_{cp} or V_{cpg}	11.63	0.70	8.14	0.75	6.10	0.60	1.50	0.246	OK
Controlling Failure Mode:		**Vcb**			**2.42**	**0.60**	**1.50**	**0.621**	OK

* If Required, Not Required for Ductile Steel Elements

Tension and Shear Interaction

Nu /ϕNn = 0.000 > 0.2

Vu /ϕVn = 0.621 > 0.2

Interaction needs only meet equation D-31 or RD.7, not both. **Anchorage is** OK

Interaction Equation D-31 NA OK

Interaction Equation RD.7 NA OK

COMPUTERIZED STRUCTURAL DESIGN, S.C.
CONSULTING ENGINEERS
8989 N. Port Washington Rd.
Milwaukee, WI 53217-1633
414-351-5588 FAX 414-351-4617

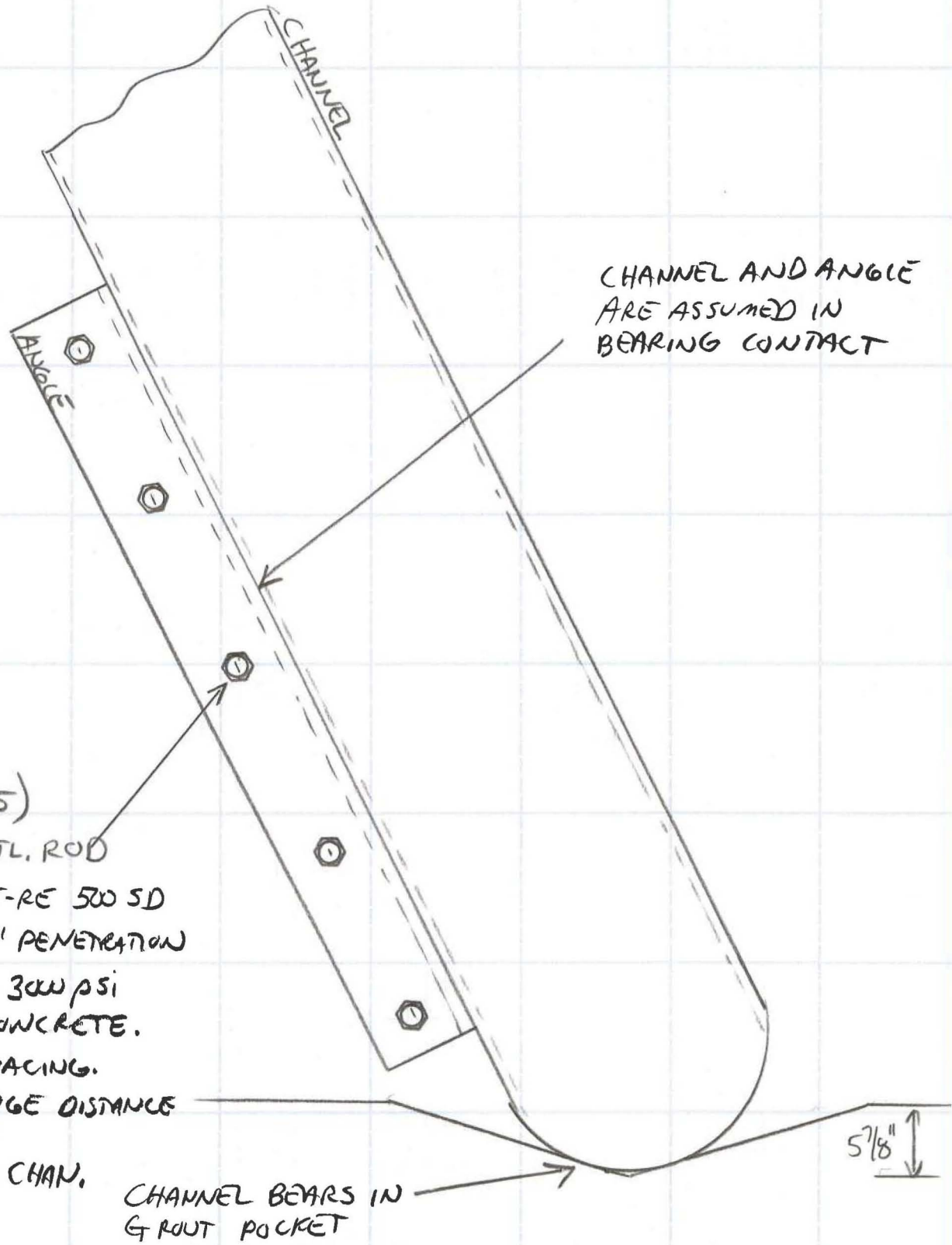

COMPUTERIZED STRUCTURAL DESIGN, S.C.
CONSULTING ENGINEERS
8989 N. Port Washington Rd.
Milwaukee, WI 53217-1633
414-351-5588 FAX 414-351-4617

Calculations Based on ESR-2322 (Reissued July 1, 2009) Subject to re-examination in one year.

4/6/2012 8:17 AM

ACI 318-05 Load Combinations: **Section 9.2**

N_{ua} = **1.00** k
V_{ua} = **0.40** k

Concrete Properties
f'_c = **3000** psi
Normal Weight
λ = 1
h (thick) = **9** in

Anchorage Properties
hmin = 6.25 in
hefmax = 10 in
smin = 2.5 in
cmin = 2.5 in

Hilti HIT-RE 500-SD

Material: **ASTM F593, CW Stainless**
Name: **1/2" dia.**
Steel Element: Brittle
Anchor Dia., d_o (in.)= 1/2
Embedment, h_{ef} (in.) = **5.00**
$h_{ef\,min}$ (in.) = 2.00
Temperature Range: **A**
Anchors Welded to PL? **No**
Anchors in Tension = **1**
Anchors in Shear = **1**

Seismic Design Category (IBC): **C, D, E or F**
Seismic Factor: 0.75
Supplementary / Confinement Reinforcement? **No**
Concrete Cracked @ Service Load Levels? **No**
Installation Conditions: **Underwater Application**
Hole Type: **Hammer Drilled**
Short Term Loading? **No**
Sustained tension Loading? **No**

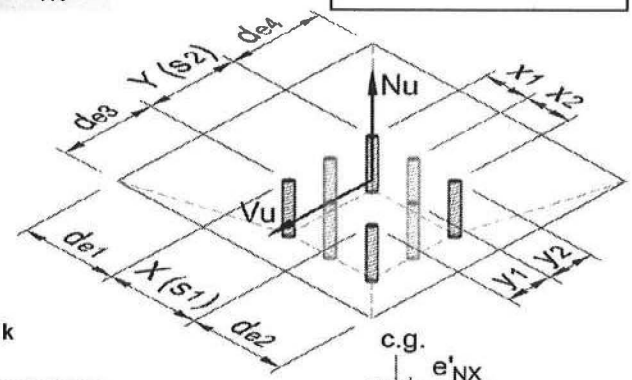

D.5 Tension Loading

ϕN_n = **4.83** k

D.5.1 Steel Strength

ϕ = 0.65

n = 1
N_{sa} = 14.19 k $1.5 * h_{ef}$ = 7.50
$n * N_{sa}$ = 14.19 k
ϕN_{sa} = **9.22** k

D.5.2 Breakout Strength

ϕ = 0.65 ϕN_c = **4.83** k

h'_{ef} = 5.00 in (Section D.5.2.3)
A_{Nc} = 225.00 in^2
A_{Nco} = 225.00 in^2 (Eq. D-6)
$\Psi_{ec,N\,(x)*(y)}$ = 1.00 (Eq. D-9 for x and y)
$\Psi_{ed,N}$ = 1.00 (Eq. D-10 & D-11)
$\Psi_{c,N}$ = 1.00 (Section D.5.2.6)
c_{ac} = 8.93 (Section 4.1.10)
$\Psi_{cp,N}$ = 1.00 (Eq. D-12 & D-13)
k_c = 24.00 Table 8 or 24
N_b = 14.70 (Eq. D-7)
N_{cb} or N_{cbg} = 14.697 (Eq. D-4 & D-5)
ϕN_{cb} or ϕN_{cbg} = **9.55** k

X (s1) = **0** in
Y (s2) = **0** in
d_{e1} = **12.00** in
d_{e2} = **12.00** in
d_{e3} = **12.00** in
d_{e4} = **12.00** in
$c_{a,min}$ = 12.00 in
$c_{a,max}$ = NA in

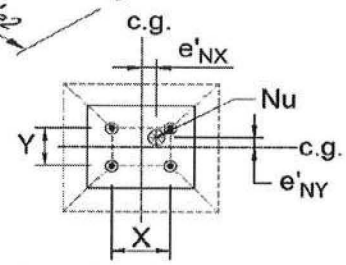

Eccentricity per D.5.2.4

e'_{NX} = in
$\Psi_{ec,N\,(x)}$ = 1.00 (Eq. D-9)
$\Psi_{ec,Na\,(x)}$ = 1.00 (Eq. D-16j)

e'_{NY} = in
$\Psi_{ec,N\,(y)}$ = 1.00 (Eq. D-9)
$\Psi_{ec,Na\,(y)}$ = 1.00 (Eq. D-16j)

D.5.3.7 Bond Strength

ϕ_{nn} = 0.45 Table 9, 10, 25 or 26

A_{Na} = 144.89 in^2
A_{Nao} = 144.89 in^2 (Eq. D-16c)
$\Psi_{ec,Na\,(x)*(y)}$ = 1.00 (Eq. D-16j for x and y)
$\Psi_{ed,Na}$ = 1.00 (Eq. D-16l & D-16m)
$\Psi_{g,Na0}$ = 1.00 (Eq. D-16h)
$\Psi_{g,Na}$ = 1.00 (Eq. D-16g)
$\Psi_{p,Na}$ = 1.00 (Eq. D-16o & D-16p)
N_{a0} = 10.73 k (Eq. D-16f & Sec. D4.1.4)
N_a or N_{ag} = 10.73 (Eq. D-16a or D-16b)
ϕN_a or ϕN_{ag} = **4.83** k

S = **4** in
κ_{nn} = 0.94 Table 9, 10, 25 or 26
τ_k = 2235 Table 9, 10, 25 or 26
$\alpha_{N,seis}$ = 0.65 Table 9 or 10
$\tau_k * \kappa_{nn} * \alpha_{N,seis}$ = 1365.585
$\tau_{k,max}$ = 1871 in (Eq. D-16i or D-16n)
$h_{ef,min}$ = 2 Table 9, 10, 25 or 26
$s_{cr,Na}$ = 12.04 in (Eq. D-16d)
$c_{cr,Na}$ = 6.02 in (Eq. D-14e)
smin = 2.5 in (Table 8 or 24)

COMPUTERIZED STRUCTURAL DESIGN, S.C.
CONSULTING ENGINEERS
8969 N. Port Washington Rd.
Milwaukee, WI 53217-1633
414-351-5588 FAX 414-351-4617

Calculations Based on ESR-2322 (Reissued July 1, 2009) Subject to re-examination in one year. 4/6/2012 8:17 AM

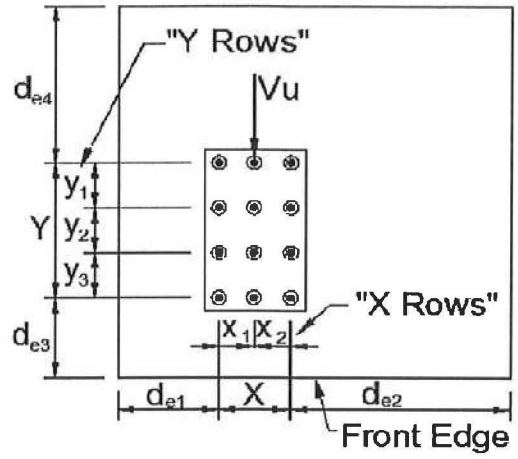

D.6 Shear Loading $\phi Vn =$ **3.58** **k**

D.6.1 Steel Strength $\phi =$ 0.60

Built-up Grout Pad?	No	
n =	1	
V_{sa} =	8.52	k
Grout Pad Factor:	1	(Section D6.1.3)
$\alpha_{V,seis}$ =	0.7	Table 7 or 23
$n * V_{sa} * \alpha_{V,seis}$ =	5.96	k (Eq. D-19)
ϕVsa =	**3.58**	**k**

D.6.2 Breakout Strength $\phi =$ 0.70 $\phi Vc =$ **6.83** **k**

Front Edge Breakout

.1 (a) and (b) Vn based on farthest most anchor(s)

c_{a1} =	12.00	in						
$1.5 * c_{a1}$ =	18.00	in	h_a =	9	in (Edge)	n_x =	1	
c'_{a1} =	8.00	in	X =	0	in	x =	0	in
A_{Vc} =	216.00	in^2	Y =	0	in	n_y =	1	
A_{Vco} =	288.00	in^2 (Eq. D-23)	d_{e1} =	12	in (Edge)	y =	0	in
l_e (h_{ef}) =	4.00	Section 4.1.6 or D.6.2.2	d_{e2} =	12	in (Edge)			
V_b =	9.30	k (Eq. D-24)	d_{e3} =	12	in			
$\Psi_{c,V}$ =	1.40	Section D.6.2.7	d_{e4} =	12	in			
			$c_{a2,max}$ =	12	in			

.1 (a) Force ⊥ to Edge (Single Anchor) **Consider**

$\Psi_{ed,V}$ =	1.00	(Eq. D-27 or D-28)
V_{cb} =	9.76	k (Eq. D-21)

Eccentricity per D.6.2.5

e'_V =	0	in
$\Psi_{ec,V}$ =	1.00	(Eq. D-26)

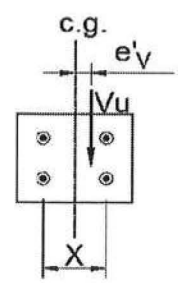

.1 (b) Force ⊥ to Edge (Group) **N/A**

V_{cbg} =	9.76	k (Eq. D-22)

Side Edge Breakout

.1 (c) Vn based on farthest most anchor(s)

c_{a1} =	12.00	in	h_a =	9	in (Edge)	n_x =	1	
$1.5 * c_{a1}$ =	18.00	in	X =	0	in	x =	0.00	in
c'_{a1} =	8.00	in	Y =	0	in	n_y =	1	
A_{Vc} =	216.00	in^2	d_{e1} =	12	in (Edge)	y =	0	in
A_{Vco} =	288.00	in^2 (Eq. D-23)	d_{e2} =	12	in (Edge)			
l_e (h_{ef}) =	4.00	Section D.6.2.2	d_{e3} =	12	in			
V_b =	9.30	k (Eq. D-24)	d_{e4} =	12	in			
$\Psi_{c,V}$ =	1.40	Section D.6.2.7	$c_{a2,max}$ =	12	in			

Force || to Edge (Single Anchor) per .1 (a) **Consider**

$\Psi_{ed,V}$ =	1.00	See Section D.6.2.1(c)
V_{cb} =	9.76	k (Eq. D-21)
$2 \cdot V_{cb}$ =	19.53	See Section D.6.2.1(c)

Force || to Edge (Group) per .1 (b) **N/A**

$\Psi_{ec,V}$ =	1.00	(Eq. D-26)
V_{cbg} =	9.76	k (Eq. D-22)
$2 \cdot V_{cbg}$ =	19.53	See Section D.6.2.1(c)

COMPUTERIZED STRUCTURAL DESIGN, S.C.
CONSULTING ENGINEERS
8969 N. Port Washington Rd.
Milwaukee, WI 53217-1633
414-351-5588 FAX 414-351-4617

Calculations Based on ESR-2322 (Reissued July 1, 2009) Subject to re-examination in one year. 4/6/2012 8:17 AM

D.6.3 Pryout Strength $\phi =$ 0.70 "Condition B"

h_{ef} =	5.00	in	S =	6	in			
k_{cp} =	2.00		smin =	2.5	in (Table 8 or 24)			
h'_{ef} =	5.00	in (Section D.5.2.3)						
A_{Nc} =	225.00	in^2						
A_{Nco} =	225.00	in^2 (Eq. D-6)	A_{Na} =	144.89	in^2			
$\Psi_{ec,N}$ =	1.00	(Eq. D-9)	A_{Nao} =	144.89	in^2 (Eq. D-16c)			
$\Psi_{ed,N}$ =	1.00	(Eq. D-10 & D-11)	$\Psi_{ec,Na}$ =	1.00	(Eq. D-16j)			
$\Psi_{c,N}$ =	1.00	(Section D.5.2.6)	$\Psi_{ed,Na}$ =	1.00	(Eq. D-16l & D-16m)			
c_{ac} =	12.5	(Section 4.1.10)	$\Psi_{g,Na0}$ =	1.00	(Eq. D-16h)			
$\Psi_{cp,N}$ =	0.96	(Eq. D-12 & D-13)	$\Psi_{g,Na}$ =	1.00	(Eq. D-16g)			
k_c =	24	Table 8 or 24	$\Psi_{p,Na}$ =	1.00	(Eq. D-16o & D-16p)			
N_b =	14.70	(Eq. D-7)	N_{a0} =	10.73	k (Eq. D-16f)			
N_{cb} or N_{cbg} =	14.11	(Eq. D-4 & D-5)	N_a or N_{ag} =	10.73	(Eq. D-16a or D-16b)			
V_{cp} or V_{cpg} =	28.22	(Eq. D-28a & D-28b)	V_{cp} or V_{cpg} =	21.45	(Eq. D-30a & D-30b)			

ϕV_{cp} or ϕV_{cpg} = 15.02 k

Eccentricity per D.5.2.4

e'_N =	0	in
$\Psi_{ec,N}$ =	1.00	(Eq. D-9)
X (s1) =	0	in
Y (s2) =	0	in
d_{e1} =	12	in
d_{e2} =	12	in
d_{e3} =	12	in
d_{e4} =	12	in
$c_{a,min}$ =	12	in
$c_{a,max}$ =	NA	in
x, y_{max} =	0	in

Tension and Shear

ϕNs =	**9.22**	**k**	**ϕNc =**	**4.83**	**k <--Controls**
ϕVs =	**3.58**	**k <--Controls**	**ϕVc =**	**6.83**	**k**

Seismic Factor: 0.75

N_{ua} =	**1.00**	**k**	**0.75ϕNn =**	**3.62**	**k**	OK
V_{ua} =	**0.40**	**k**	**0.75ϕVn =**	**2.68**	**k**	OK

Anchorage is See Next Page

Tension and Shear Interaction

Nu /ϕNn =	0.28	**0.2 ϕNn =**	0.72
Vu /ϕVn =	0.15	**0.2 ϕVn =**	0.54

Interaction needs only meet equation D-31 or RD.7, not both.

Interaction Equation D-31	**NA**	OK
Interaction Equation RD.7	**NA**	OK

Ductility Requirement per IBC Section 1908.1.16 D.3.3.4

Anchors designed for 2.5 times the factored forces.

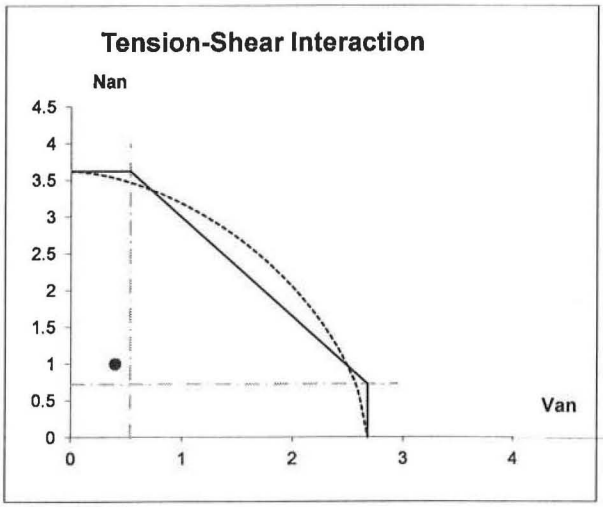

Spacing, Edge Distance to preclude splitting failure, ACI 318 D.8

Are anchors Torqued?		No		
Spacing	*Minimum center-to-center*	2.50	in	(Section 4.1.9)
	Maximum for group action	15.00	in	Tension
		15.00	in	Shear
Edge Distance, c_{min}		ACI 318	Section 7.7	
Edge Distance, c_{ac}		8.93	in	

COMPUTERIZED STRUCTURAL DESIGN, S.C.
CONSULTING ENGINEERS
8989 N. Port Washington Rd.
Milwaukee, WI 53217-1633
414-351-5588 FAX 414-351-4617

Calculations Based on ESR-2322 (Reissued July 1, 2009) Subject to re-examination in one year. 4/6/2012 8:17 AM

For Anchors Designed for 2.5 times the factored forces:

Failure Mode	N_n	ϕ	ϕN_n	ϕ_{seis}	$\phi_{seis}\phi N_n$	N_{ua}	$2.5N_{ua}$*	$\frac{2.5N_{ua}}{\phi_{seis}\phi N_n}$	
N_{sa}	14.19	0.65	9.22	0.75	6.92	1.00	2.50	0.361	OK
N_{cb} or N_{cbg}	14.70	0.65	9.55	0.75	7.16	1.00	2.50	0.349	OK
$n \cdot N_{ag}$	10.73	0.45	4.83	0.75	3.62	1.00	2.50	0.691	OK
Controlling Failure Mode:		**n · Nag**			**3.62**	**1.00**	**2.50**	**0.691**	OK

* If Required, Not Required for Ductile Steel Elements

Failure Mode	V_n	ϕ	ϕV_n	ϕ_{seis}	$\phi_{seis}\phi V_n$	V_{ua}	$2.5V_{ua}$*	$\frac{2.5V_{ua}}{\phi_{seis}\phi V_n}$	
V_{sa}	5.96	0.60	3.58	0.75	2.68	0.40	1.00	0.373	OK
V_{cb}	9.76	0.70	6.83	0.75	5.13	0.40	1.00	0.195	OK
V_{cbg}	N/A	0.70	N/A	0.75	N/A	0.40	1.00	N/A	OK
$n_y \cdot V_{cb}$	9.76	0.70	6.83	0.75	5.13	0.40	1.00	0.195	OK
$n_y \cdot V_{cbg}$	N/A	0.70	N/A	0.75	N/A	0.40	1.00	N/A	OK
$2 \cdot V_{cb}$	19.53	0.70	13.67	0.75	10.25	0.40	1.00	0.098	OK
$2 \cdot V_{cbg}$	N/A	0.70	N/A	0.75	N/A	0.40	1.00	N/A	OK
$2 \cdot n_y \cdot V_{cb}$	19.53	0.70	13.67	0.75	10.25	0.40	1.00	0.098	OK
$2 \cdot n_y \cdot V_{cbg}$	N/A	0.70	N/A	0.75	N/A	0.40	1.00	N/A	OK
V_{cp} or V_{cpg}	21.45	0.70	15.02	0.75	11.26	0.40	1.00	0.089	OK
Controlling Failure Mode:		**Vsa**			**2.68**	**0.40**	**1.00**	**0.373**	OK

* If Required, Not Required for Ductile Steel Elements

Tension and Shear Interaction

Nu /ϕNn = 0.691 > 0.2

Vu /ϕVn = 0.373 > 0.2

Interaction needs only meet equation D-31 or RD.7, not both. **Anchorage is** OK

Interaction Equation D-31 1.06 **<= 1.2** OK

Interaction Equation RD.7 0.73 **<= 1.0** OK

ICC EVALUATION SERVICE

Most Widely Accepted and Trusted

ICC-ES Evaluation Report

ESR-2322

Reissued February 1, 2012

This report is subject to renewal April 1, 2014.

www.icc-es.org | (800) 423-6587 | (562) 699-0543 *A Subsidiary of the International Code Council®*

DIVISION: 03 00 00—CONCRETE
Section: 03 16 00—Concrete Anchors

REPORT HOLDER:

HILTI, INC.
5400 SOUTH 122ND EAST AVENUE
TULSA, OKLAHOMA 74146
(800) 879-8000
www.us.hilti.com
HiltiTechEng@us.hilti.com

EVALUATION SUBJECT:

HILTI HIT-RE 500-SD ADHESIVE ANCHORS IN CONCRETE

1.0 EVALUATION SCOPE

Compliance with the following codes:

- 2009 *International Building Code®* (2009 IBC)
- 2009 *International Residential Code®* (2009 IRC)
- 2006 *International Building Code®* (2006 IBC)
- 2006 *International Residential Code®* (2006 IRC)
- 2003 *International Building Code®* (2003 IBC)
- 2003 *International Residential Code®* (2003 IRC)
- 2000 *International Building Code®* (2000 IBC)
- 2000 *International Residential Code®* (2000 IRC)

Property evaluated:

Structural

2.0 USES

The Hilti HIT-RE 500-SD Adhesive Anchoring System is used to resist static, wind and seismic tension and shear loads in cracked and uncracked normal-weight concrete having a specified compressive strength, f'_c, of 2,500 psi to 8,500 psi (17.2 MPa to 58.6 MPa). The anchor system is an alternative to cast-in-place and post-installed anchors described in Sections 1911 and 1912 of the 2009 and 2006 IBC, or Sections 1912 and 1913 of the 2000 or 2003 IBC. The anchor systems may also be used where an engineered design is submitted in accordance with Section R301.1.3 of the 2009, 2006 and 2003 IRC, Section R301.1.3 of the 2003 IRC, or Section R301.1.2 of the 2000 IRC.

3.0 DESCRIPTION

3.1 General:

The Hilti HIT-RE 500-SD Adhesive Anchoring System is comprised of the following components:

- Hilti HIT-RE 500-SD adhesive packaged in foil packs
- Adhesive mixing and dispensing equipment
- Equipment for hole cleaning and adhesive injection

The Hilti HIT-RE 500-SD Adhesive Anchoring System may be used with continuously threaded rod, Hilti HIS-(R)N and HIS-RN internally threaded inserts or deformed steel reinforcing bars. The primary components of the Hilti Adhesive Anchoring System, including the Hilti HIT-RE 500-SD Adhesive, HIT-RE-M static mixing nozzle and steel anchoring elements, are shown in Figure 2 of this report.

Installation information and parameters, as included with each adhesive unit package, are replicated as Figure 5 of this report.

3.2 Materials:

3.2.1 Hilti HIT-RE 500-SD Adhesive: Hilti HIT-RE 500-SD Adhesive is an injectable two-component epoxy adhesive. The two components are separated by means of a dual-cylinder foil pack attached to a manifold. The two components combine and react when dispensed through a static mixing nozzle attached to the manifold. Hilti HIT-RE 500-SD is available in 11.1-ounce (330 ml), 16.9-ounce (500 ml), and 47.3-ounce (1400 ml) foil packs. The manifold attached to each foil pack is stamped with the adhesive expiration date. The shelf life, as indicated by the expiration date, corresponds to an unopened foil pack stored in a dry, dark environment.

3.2.2 Hole Cleaning Equipment: Hole cleaning equipment must be in accordance with Figure 5 of this report.

3.2.3 Dispensers: Hilti HIT-RE 500-SD must be dispensed with manual dispensers, pneumatic dispensers, or electric dispensers provided by Hilti.

3.2.4 Anchor Elements:

3.2.4.1 Threaded Steel Rods: Threaded steel rods must be clean, continuously threaded rods (all-thread) in diameters as described in Tables 7 and 11 and Figure 5 of this report. Steel design information for common grades of threaded rods are provided in Table 2 and Table 3. Carbon steel threaded rods must be furnished with a 0.005-millimeter-thick (5 µm) zinc electroplated coating complying

ICC-ES Evaluation Reports are not to be construed as representing aesthetics or any other attributes not specifically addressed, nor are they to be construed as an endorsement of the subject of the report or a recommendation for its use. There is no warranty by ICC Evaluation Service, LLC, express or implied, as to any finding or other matter in this report, or as to any product covered by the report.

Copyright © 2012

COMPUTERIZED
STRUCTURAL
DESIGN, S.C.
CONSULTING ENGINEERS
8989 N. Port Washington Rd.
Milwaukee, WI 53217-1633
414-351-5588 FAX 414-351-4617

Project WENATCHEE WWTP
Job No. J120255 MAM By MAE
Date Page D1 of

KUSTERS ZIMA
DRAWINGS
FOR REFERENCE
ONLY

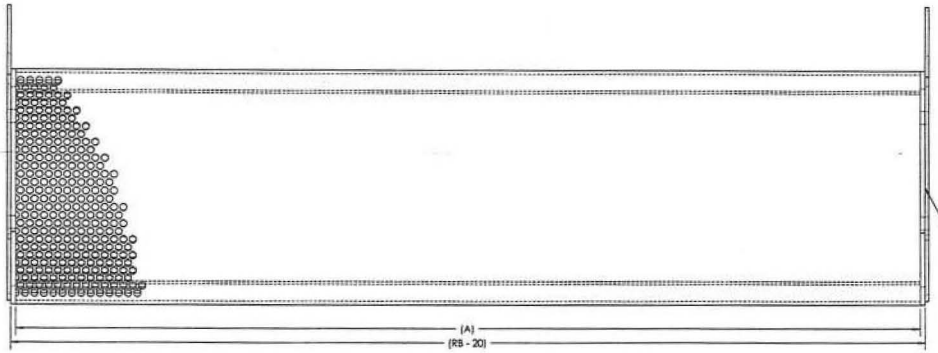

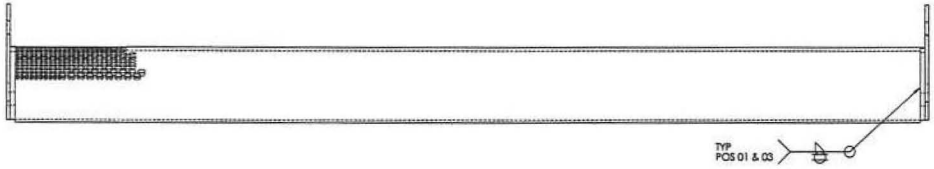

TYPICAL FILTER PANEL CONSTRUCTION

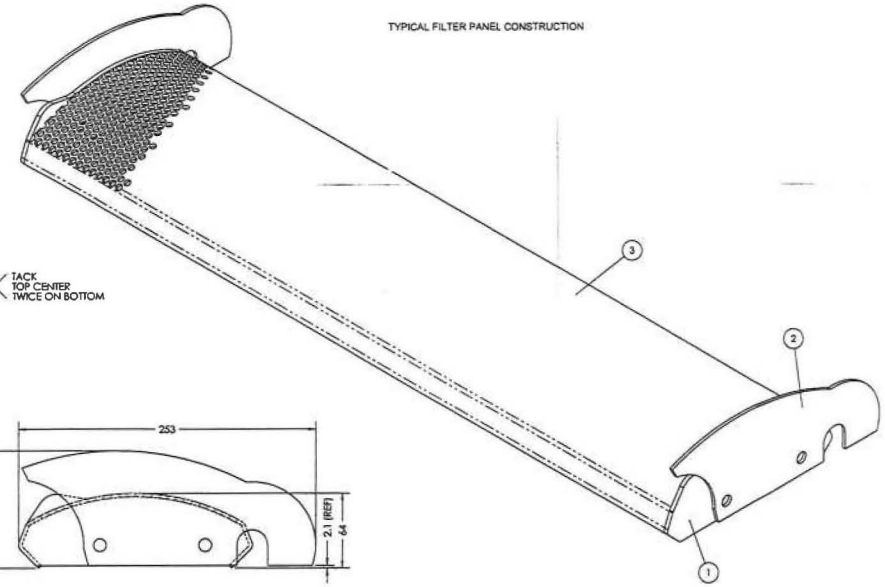

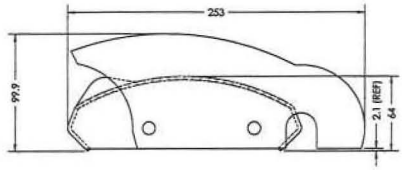

RB	A
0400	371
0500	471
0600	571
0700	671
0800	771
0900	871
1000	971
1100	1071
1200	1171
1300	1271
1400	1371
1500	1471
1600	1571
1700	1671

(2) DETAIL

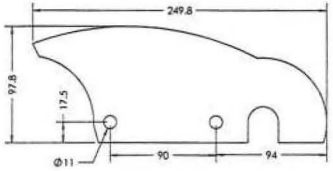

(1) DETAIL

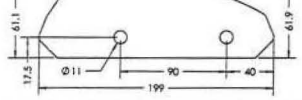

(3) FLAT LAYOUT/DETAIL

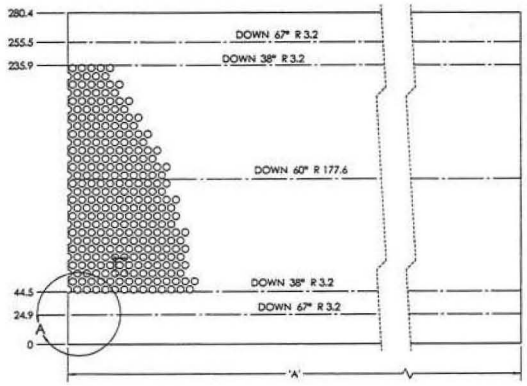

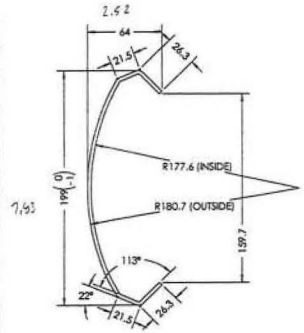

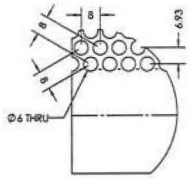

DETAIL A
SCALE 1 : 1

POS.	QTY	PART NUMBER	DESCRIPTION	MATERIAL	VENDOR
3	1	782940-RB	CUSTOM PERF 11GA X 280.7 X (A)	SEE M.L.	
2	2		11GA X 97.8 X 249.8	SEE M.L.	
1	2		8GA X 61.9 X 199	SEE M.L.	

BOM Table(Restructured)

PROPRIETARY DOCUMENT:
This document, the information which it contains, and the know-how depicted are the property of KUSTERS ZIMA Corporation and may not be used in any manner detrimental to the Corporation's interest. Reproduction in whole or in part may not be made without written permission from KUSTERS ZIMA Corporation; and if made, shall bear or refer to this notice.

UNLESS OTHERWISE SPECIFIED
DIMENSIONS ARE IN MM
TOLERANCES:
FRACTIONAL ± 1/16"
ANGULAR: MACH ± 0.5°
BEND ± 1°
1 PLACE DECIMAL ± 0.8 MM
2 PLACE DECIMAL ± 0.25 MM

KUSTERS ZIMA CORPORATION
Spartanburg SC USA

TITLE SCREEN PANEL, RB UP TO 1700

SCALE 1:2	WEIGHT: 17.468 LBS. (EST)	SHEET 1 OF 1	MODEL NO. 782940
DRAWN SWR	CHECKED	DATE 3/18/2011	SIZE D DWG. NO. 782940 REV 0

D2

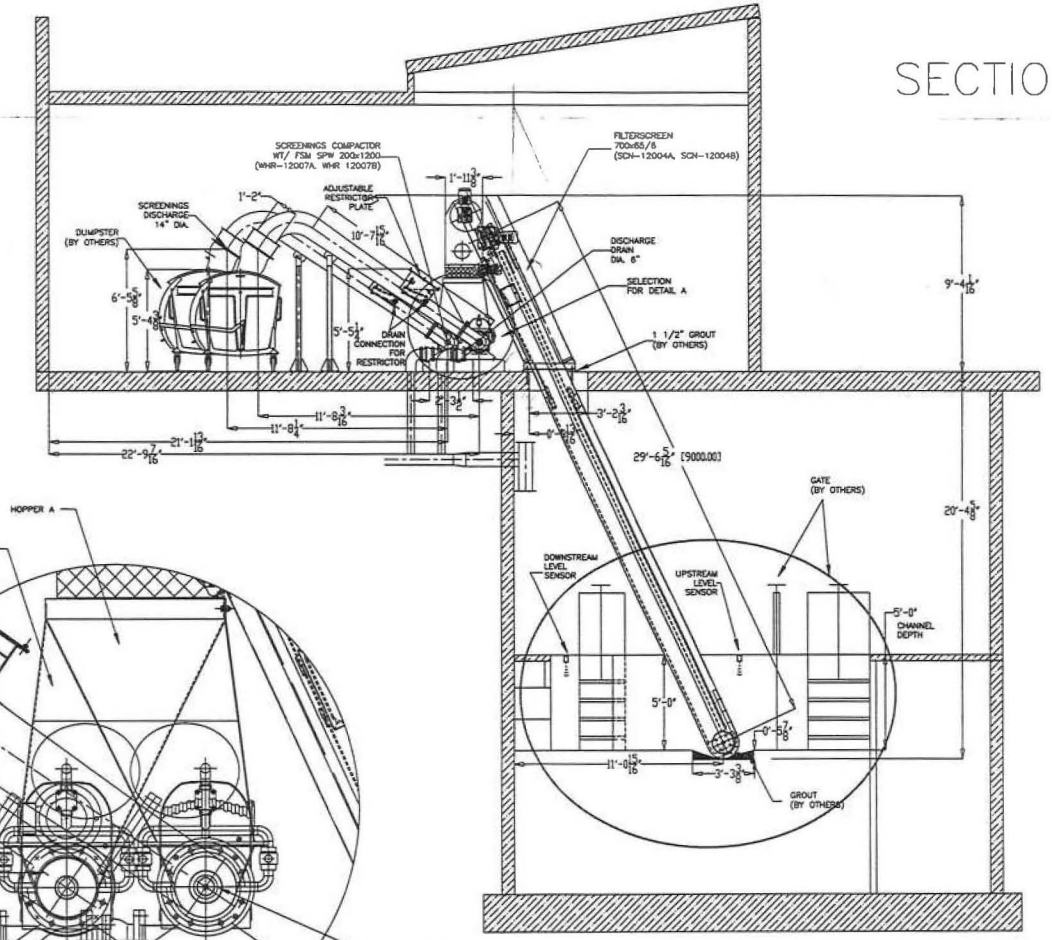

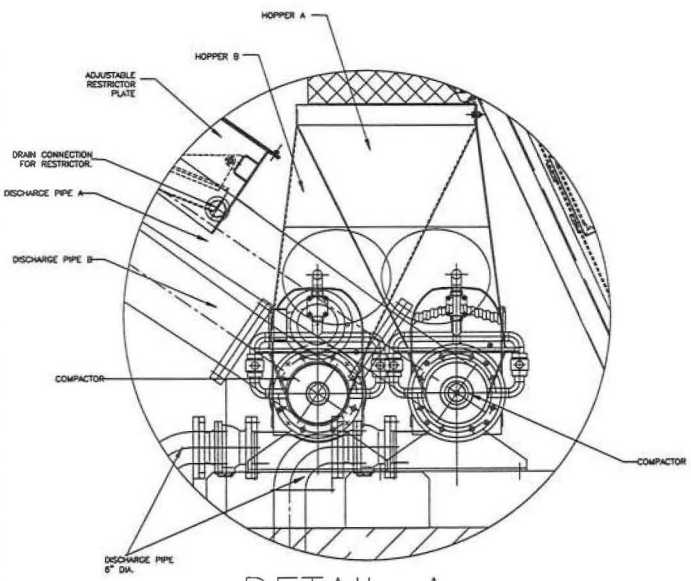

DETAIL A

SHEET 3 of 3

POS	QTY.	DIMENSION	MATERIAL	CHANGE

PROPRIETARY DOCUMENT: This document, the information which it contains, and the know-how exploited are the property of KOSTERS ZINA Corporation and may not be used in any manner detrimental to the Corporation's interest. Reproduction in whole or in part may not be made without written permission from KOSTERS ZINA Corporation, and if made, shall bear or refer to this notice.

WASTE-TECH
A Division of KOSTERS ZINA Corporation
Spartanburg SC USA

DRN. BY	HDW	02-08-12
CH'D BY		
SCALE	1/4"=1'	

TITLE: G.A. (2) FILTERSCREENS 700x65/6, (2) SPW 200x1200 COMPACTOR

DWG.NO. SM-C21883 REV. 0

REV.	ITEM	DATE	BY

PATENT DWG.

D3

TYPICAL FILTER SCREEN FRAME DETAILS (FOR MATERIAL & CONSTRUCTION REFERENCE (THIS PARTICULAR UNIT IS NARROWER AND SHORTER THAN THE WENATCHEE SCREEN)

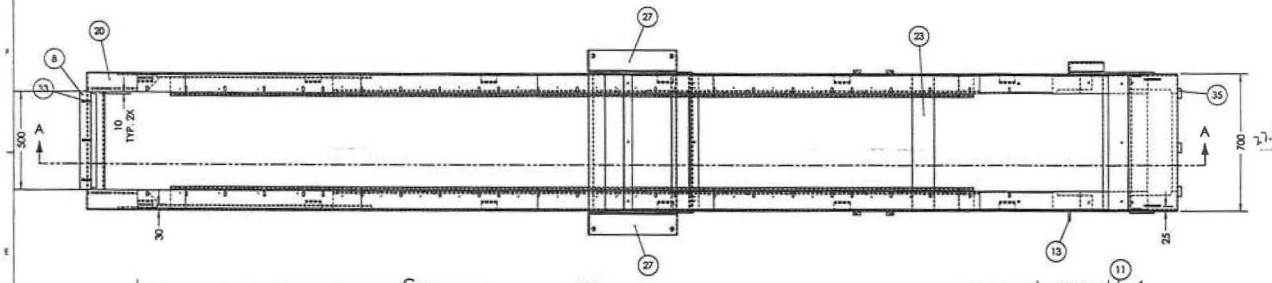

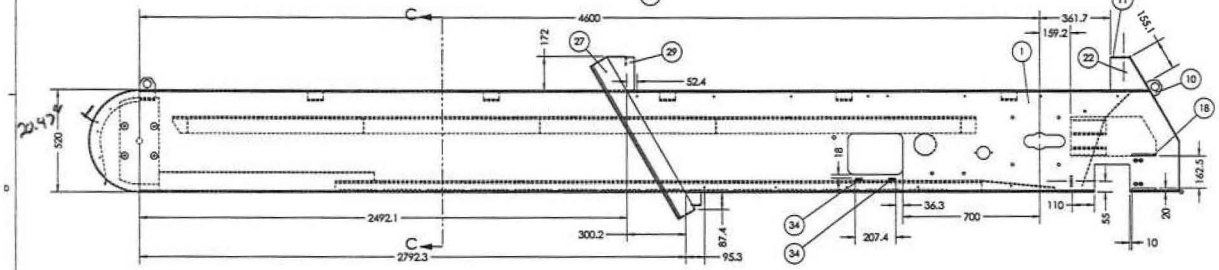

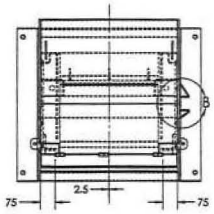

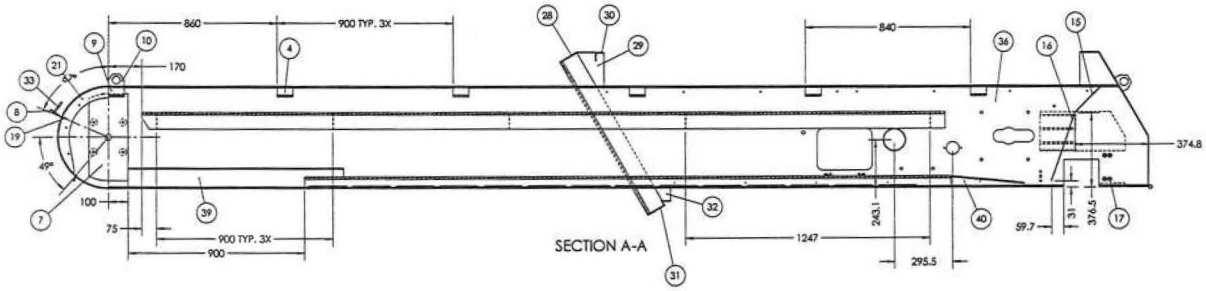

SECTION A-A

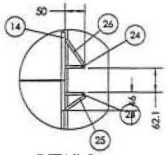

DETAIL B
SCALE 1 : 6

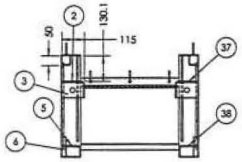

SECTION C-C

POS.	QTY	PART NUMBER	DESCRIPTION	MATERIAL	VENDOR
40	1	784039-12_EXEC_II	11 GA. X 383.1 X 144.2	SEE M.L.	
39	1	784039-06_EXEC_II	11 GA.X 900 X 116.1	SEE M.L.	
38	1	784039-05_EXEC_II	PL 1/4" X 1900 X 137.8	SEE M.L.	
37	1	784039-02_EXEC_II	PL 1/4" X 2700 X 187.3	SEE M.L.	
36	1	784039-01EXEC_II	PL 3/16" X 5565.2 X 700.9	SEE M.L.	
35	3	784039-35	TB 3/4" OD X .065" WALL X 50	SEE M.L.	
34	4	117907	HINGE, NARROW PROFILE LIFT OFF S.S.	SS	
33	3	A0BM-1.25-65	HHCS, M8-1.25 X 65 SS	SEE M.L.	
32	2	784039-32	PL 3/16" X 66.9 X 78.6	SEE M.L.	
31	1	784039-31	PL 3/16" X 1200 X 166.1	SEE M.L.	
30	2	784039-30	PL 3/16" x 690.5 X 40	SEE M.L.	
29	2	784039-29	PL 3/16" X 170.1 X 138.1	SEE M.L.	
28	1	784039-28	PL 3/16" X 1200 X 272.9	SEE M.L.	
27	2	784039-27	PL 5/16" X 800 X 204.1	SEE M.L.	
26	1	784039-26	PL 1/4" X 180 X 80	SEE M.L.	
25	1	784039-25	PL 1/4" X 180 X 60	SEE M.L.	
24	2	784039-24	PL 1/4" X 180 X 50	SEE M.L.	
23	1	784039-23	PP 4" SCH. 10 X 690.5	SEE M.L.	
22	2	784039-22	PL 3/16" X 165.2 X 192.7	SEE M.L.	
21	2	784039-21	PL 5/16" X 434.9 X 254	SEE M.L.	
20	2	784039-20	PL 3/16" X 809.2 X 95.2	SEE M.L.	
19	1	784039-19	11 GA. X 480 X 30	SEE M.L.	
18	3	784039-18	SB 3/8" X 120	SEE M.L.	
17	8	K12M-1.75	NUT, HEX M12-1.75 SS	SEE M.L.	
16	2	784039-16	11 GA. X 365 X 95	SEE M.L.	
15	1	784039-15	11 GA. X 1190.5 X 323	SEE M.L.	
14	1	784039-14	PL 3/8" X 430 X 200	SEE M.L.	
13	2	784039-13	PL 3/8" X 55 X 50	SEE M.L.	
12	1	784039-12	11 GA. X 383.1 X 144.2	SEE M.L.	
11	1	784039-11	PL 3/16" X 1200 X 799.9	SEE M.L.	
10	4	784039-10	PL 1/4" X 80 X 60	SEE M.L.	
9	2	784039-09	PL 3/16" X 80 X 76	SEE M.L.	
8	1	784039-08	PL 3/16" X 1000 X 417	SEE M.L.	
7	2	784039-07	PL 3/8" X 440 X 200	SEE M.L.	
6	1	784039-06	11 GA.X 900 X 116.1	SEE M.L.	
5	1	784039-05	PL 1/4" X 1900 X 137.8	SEE M.L.	
4	10	784039-04	PL 3/16" X 85.5 X 80	SEE M.L.	
3	10	784039-03	11 GA. X 108.7 X 78.7	SEE M.L.	
2	1	784039-02	PL 1/4" X 2700 X 187.3	SEE M.L.	
1	1	784039-01	PL 3/16" X 5565.2 X 700.9	SEE M.L.	

PROPRIETARY DOCUMENT:
This document, the information which it contains, and the know-how depicted are the property of KUSTERS ZIMA Corporation and may not be used in any manner detrimental to the Corporation's interest. Reproduction in whole or in part may not be made without written permission from KUSTERS ZIMA Corporation; and if made, shall bear or refer to this notice.

UNLESS OTHERWISE SPECIFIED
DIMENSIONS ARE IN MM
TOLERANCES:
FRACTIONAL ± 1/16"
ANGULAR BEND ± 0.5°
1 PLACE DECIMAL ± 0.8 MM
2 PLACE DECIMAL ± 0.25 MM

KUSTERS ZIMA CORPORATION
Spartanburg SC USA

TITLE: FRAME, 60 DEG FILTER SCREEN

SCALE 1:12	WEIGHT:	LBS. (EST)	SHEET 1 OF 2	MODEL NO. 784039	
DRAWN MDB	CHECKED	DATE 10/11/2011		SIZE D	DWG. NO. 784039	REV 0

04

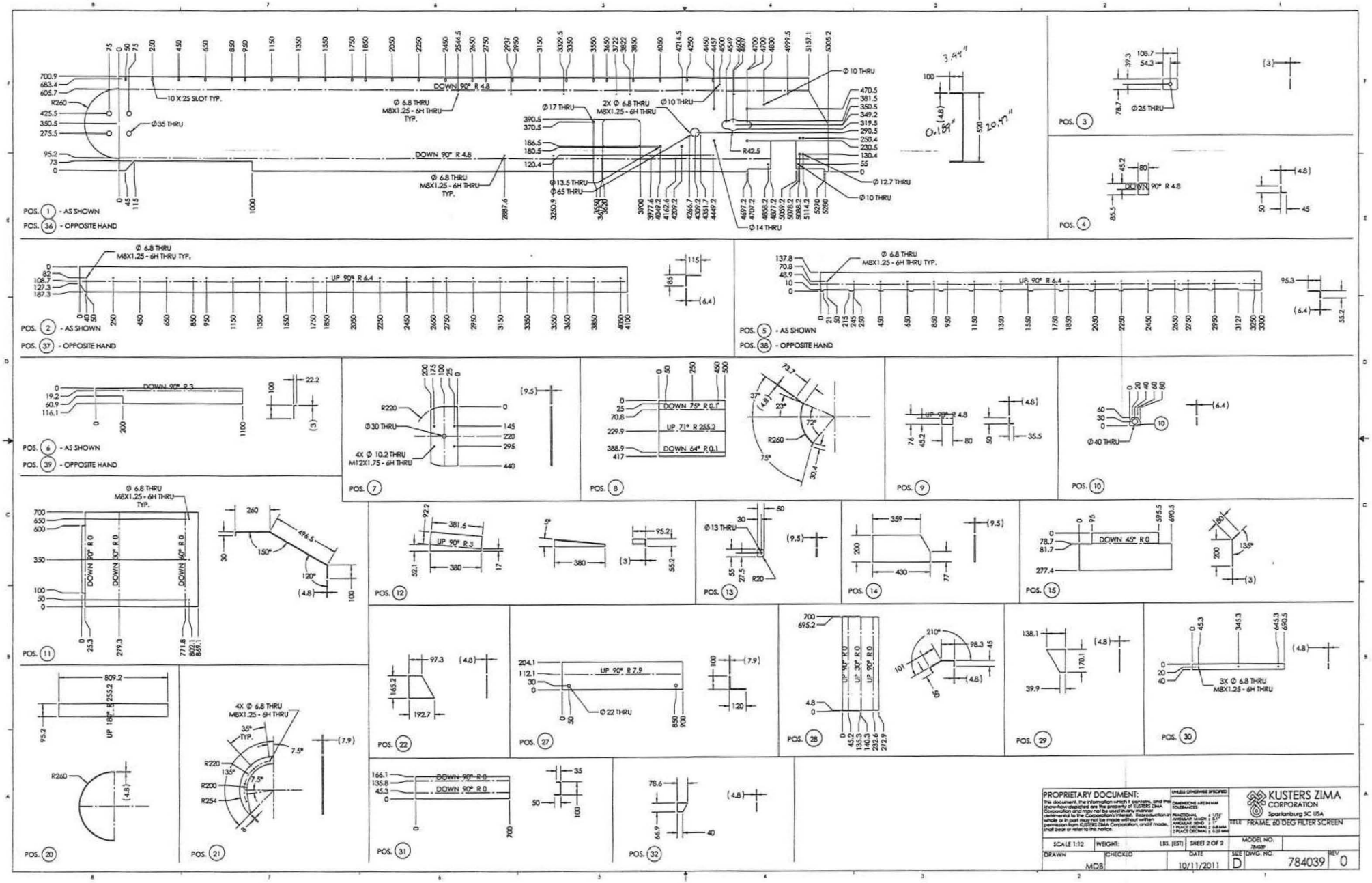
POS. 1 - AS SHOWN
POS. 36 - OPPOSITE HAND
10 X 25 SLOT TYP.
Ø 35 THRU
DOWN 90° R 4.8
Ø 6.8 THRU M8X1.25 - 6H THRU TYP.
Ø 17 THRU
2X Ø 6.8 THRU M8X1.25 - 6H THRU
Ø 10 THRU
Ø 13.5 THRU
Ø 65 THRU
Ø 12.7 THRU
Ø 14 THRU
R42.5
POS. 3
Ø 25 THRU
POS. 4
POS. 2 - AS SHOWN
POS. 37 - OPPOSITE HAND
UP 90° R 6.4
POS. 5 - AS SHOWN
POS. 38 - OPPOSITE HAND
POS. 6 - AS SHOWN
POS. 39 - OPPOSITE HAND
DOWN 90° R 3
POS. 7
R220
Ø 30 THRU
4X Ø 10.2 THRU M12X1.75 - 6H THRU
POS. 8
DOWN 75° R 0.1
UP 71° R 255.2
DOWN 64° R 0.1
R260
POS. 9
UP 90° R 4.8
POS. 10
Ø 40 THRU
POS. 11
DOWN 90° R 0
DOWN 30° R 0
POS. 12
UP 90° R 3
POS. 13
Ø 13 THRU
R20
POS. 14
POS. 15
DOWN 45° R 0
POS. 20
UP 180° R 255.2
R260
POS. 21
4X Ø 6.8 THRU M8X1.25 - 6H THRU
R200
R254
POS. 22
POS. 27
UP 90° R 7.9
Ø 22 THRU
POS. 28
UP 90° R 0
POS. 29
POS. 30
3X Ø 6.8 THRU M8X1.25 - 6H THRU
POS. 31
DOWN 90° R 0
POS. 32
PROPRIETARY DOCUMENT:
KUSTERS ZIMA CORPORATION
Spartanburg SC USA
TITLE FRAME, 80 DEG FILTER SCREEN
SCALE 1:12
WEIGHT:
LBS. (EST)
SHEET 2 OF 2
MODEL NO. 784039
DRAWN MDB
CHECKED
DATE 10/11/2011
SIZE D
DWG. NO. 784039
REV 0

5

(SITE LAYOUT for WENATCHEE FILTER SCREENS,
SHEETS 1 - 3)

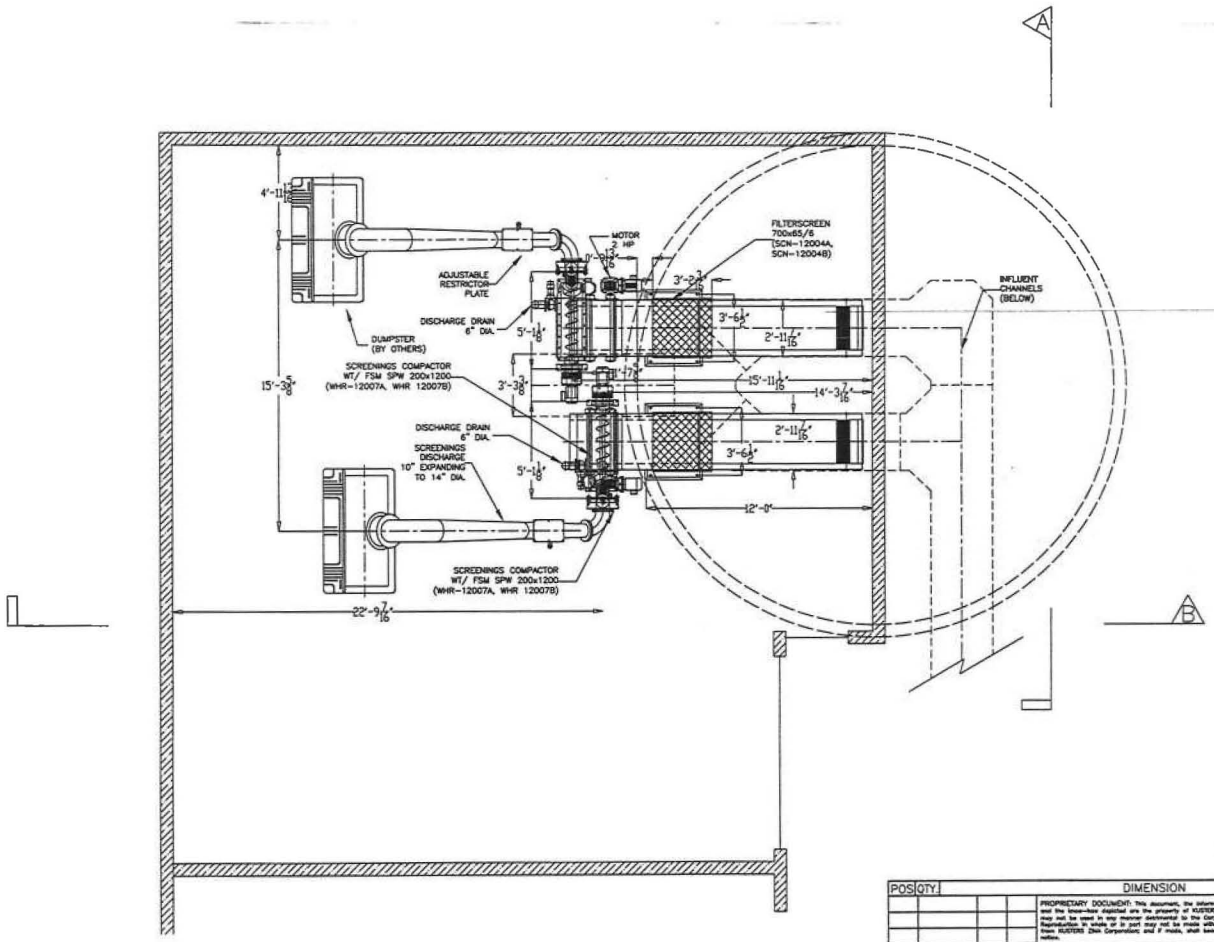

SHEET 1 of 3

POS	QTY.	DIMENSION	MATERIAL	CHANGE

PROPRIETARY DOCUMENT: This document, the information which it contains and the know-how depicted are the property of KUSTERS Zima Corporation and may not be used in any manner detrimental to the Corporation's interest. Reproduction, in whole or in part may not be made without written permission from KUSTERS Zima Corporation; and if made, shall bear or refer to this notice.

WASTE-TECH
A Division of KUSTERS Zima Corporation
Spartanburg SC USA

DRN. BY HDW 02-08-12
CH'D BY

TITLE
G.A. (2) FILTERSCREENS 700x65/6, (2) SPW 200x1200 COMPACTOR

SCALE 1/4"=1'

DWG. NO. SM-C21883 REV. 0

REV.	ITEM	DATE	BY
PARENT DWG.			

06

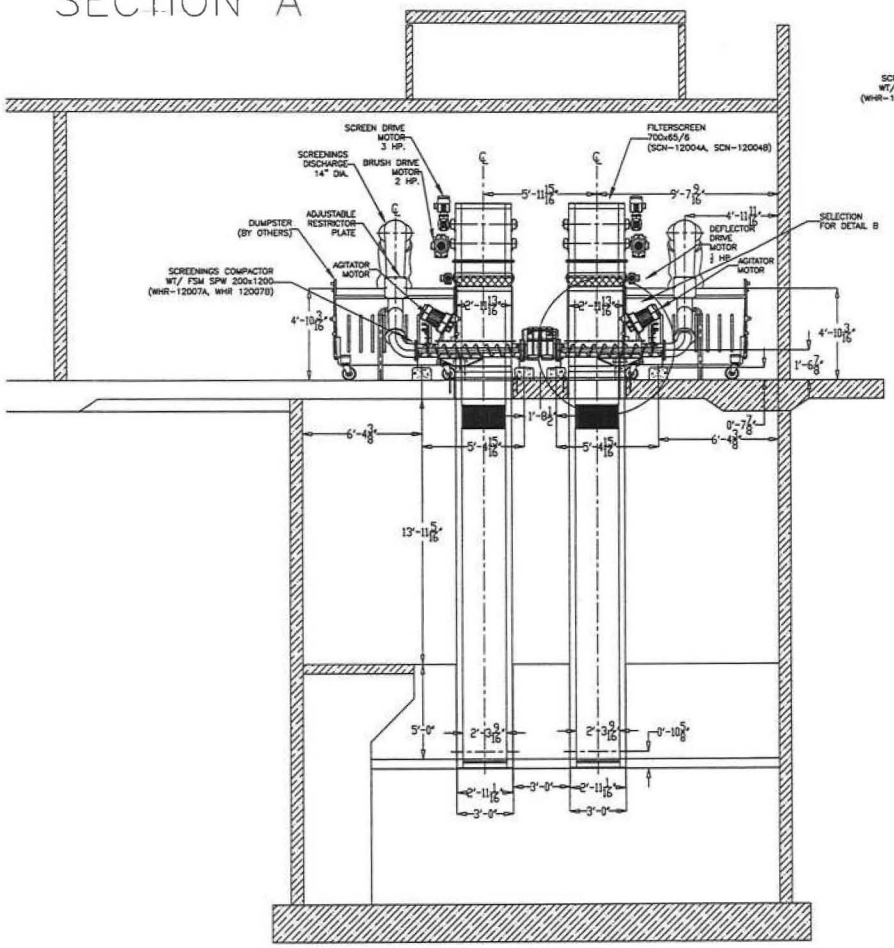

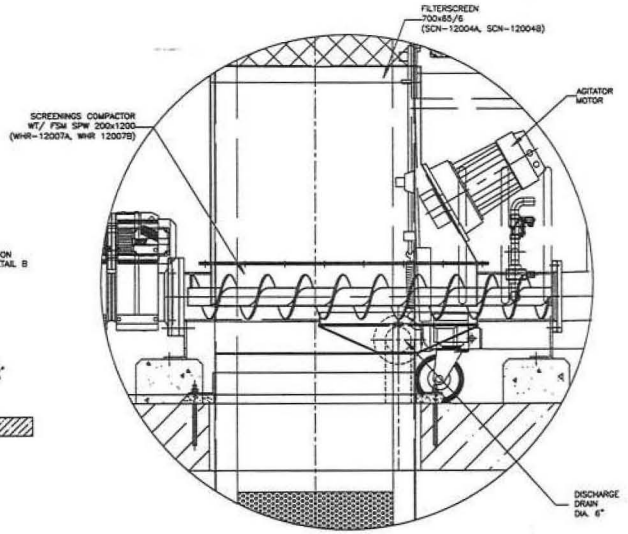

DETAIL B

SHEET 2 of 3

POS	QTY	DIMENSION	MATERIAL	CHANGE

PROPRIETARY DOCUMENT: This document, the information which it contains and the item-nos depicted are the property of KUSTERS Zink Corporation and may not be used in any manner detrimental to the Corporation's interest. Reproduction in whole or in part may not be made without written permission from KUSTERS Zink Corporation; and if made, shall bear or refer to the notice.

WASTE-TECH
A Division of KUSTERS Zink Corporation
Spartanburg SC USA

REV.	ITEM	DATE	BY
PARENT DWG.			

DRN. BY HDW 02-08-12
CH'D BY
SCALE 1/4"=1'

TITLE: G.A. (2) FILTERSCREENS 700x65/6, (2) SPW 200x1200 COMPACTOR

DWG.NO. SM-C21883 REV. 0

07

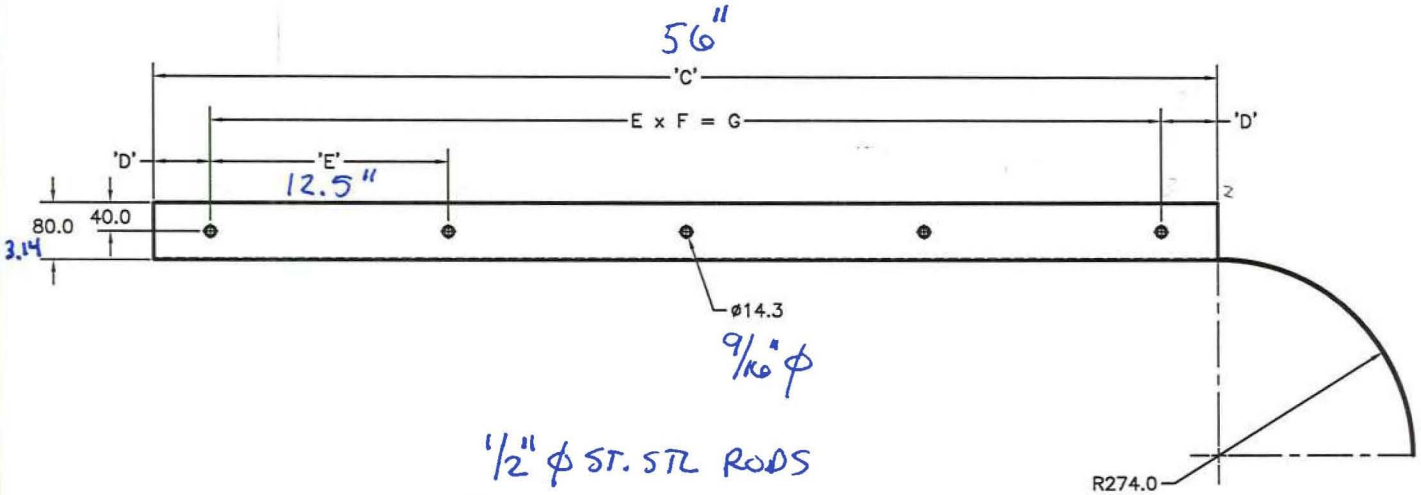

1/2" ϕ ST. STL RODS
HIT RE 500 SD EPOXY

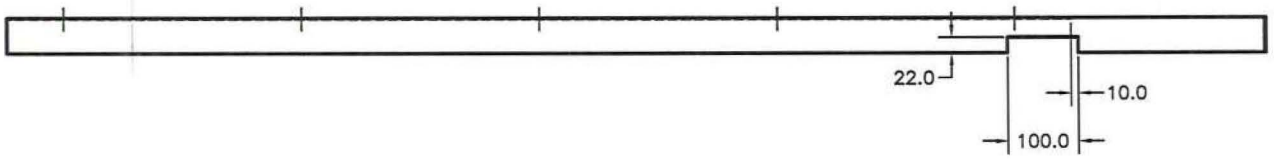

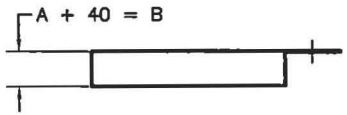

EXECUTION I: AS SHOWN
EXECUTION II: OPPOSITE

POS	QTY	DIMENSION	MATERIAL CHANGE
01	1	14GA X (A + 116.2) X (C + 432)	SEE MI

PROPRIETARY DOCUMENT: This document, the information which it contains, and the know-how depicted are the property of KUSTERS ZIMA Corporation and may not be used in any manner detrimental to the Corporation's interest. Reproduction in whole or in part may not be made without written permission from KUSTERS ZIMA Corporation and if made, shall bear or refer to this notice.

WASTE-TECH
A Division of KUSTERS ZIMA Corporation
Spartanburg, SC USA

DRN. BY	DLS	10-16-08
CH'D BY		

TITLE: SEAL SCREEN SIDE (FIXED)

SCALE 1:5 | DWG.NO. C778467 | REV. 0

REV.	ITEM	DATE	BY

D8

WASTE▪TECH
a division of KUSTERS ZIMA

1.9

TESTING PROCEDURES

FSM Mechanical Filterscreen Load Testing Procedure

Once the maximum panel force is determined by the calculations, the following experiment is performed.

First, a filter panel of corresponding length and perforation diameter is supported on each end. See Photo 1.

Photo 1

Second, a cradle is manufactured to distribute the load on the panel across the entire span. See Photo 2.

Photo 2

Third, a force equal to 150% the greatest loading on any single panel is brought to rest on the load distribution cradle, and tension on the loading crane is decreased until the proper force is applied. This force is maintained for a minimum of 4 hours. (See attached Photos 3, 4 & 5; Note the example test was completed using a 901 kg load on a 700 mm Panel. Tension was then decreased to 56 kg giving an equivalent load of 845 kg. The actual calculated loading for the panel tested was to be 552 kg or greater.)

Photo 3

Photo 4

Photo 5

While the panel is under load, the maximum deflection is measured. In the example shown the dynamic deformation was 0.15mm.

Fourth, the load is removed from the Filter Panel. Then the permanent deformation, if any is present, is measured. If there is any permanent deformation present, the panel, and consequently the screen in its entirety, is deemed to be unsuitable for the calculated installation. In the example shown, the panel showed zero permanent deflection.

WASTE▪TECH
a division of KUSTERS ZIMA

SECTION 2

LAYOUT DRAWINGS

WASTE-TECH
a division of KUSTERS ZIMA

2.1

GENERAL ARRANGEMENTS DRAWINGS

OPERATION & MAINTENANCE

WENATCHEE WWTP IMPROVEMENTS
PROJECT PO913
WENATCHEE, WA

SECTION 11092 – PERFORATED PLATE SCREENS
SECTION 11095 – SCREENINGS WASHER COMPACTOR

GENERAL ARRANGEMENT DRAWINGS

Drawing No.	REV	Description
SM-C21883	C	General Arrangement – (2) Model WT/FRS 700 x 65/6 Filterscreen with (2) SPW200 Screenings Washer Compactor with Agitator

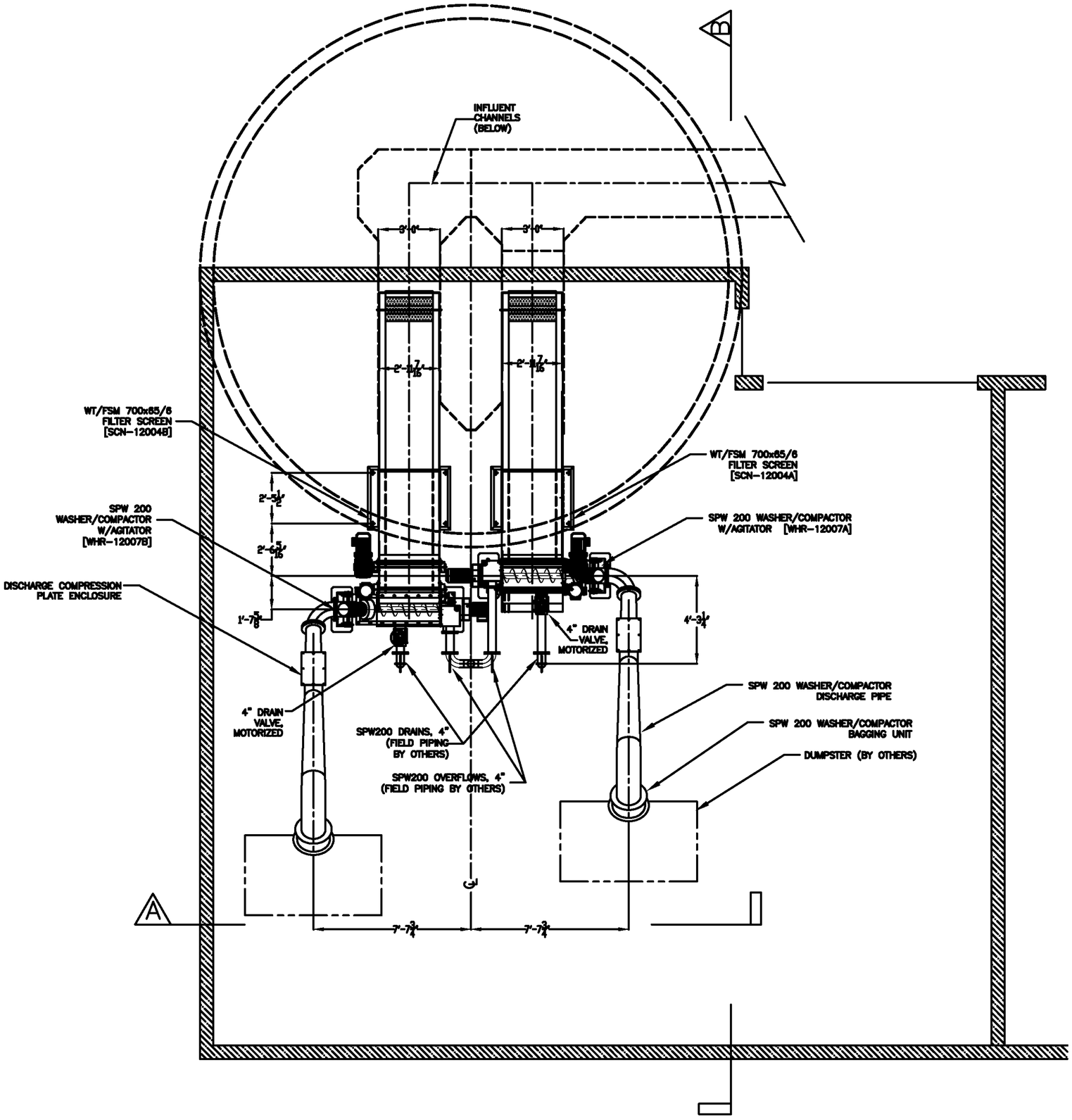

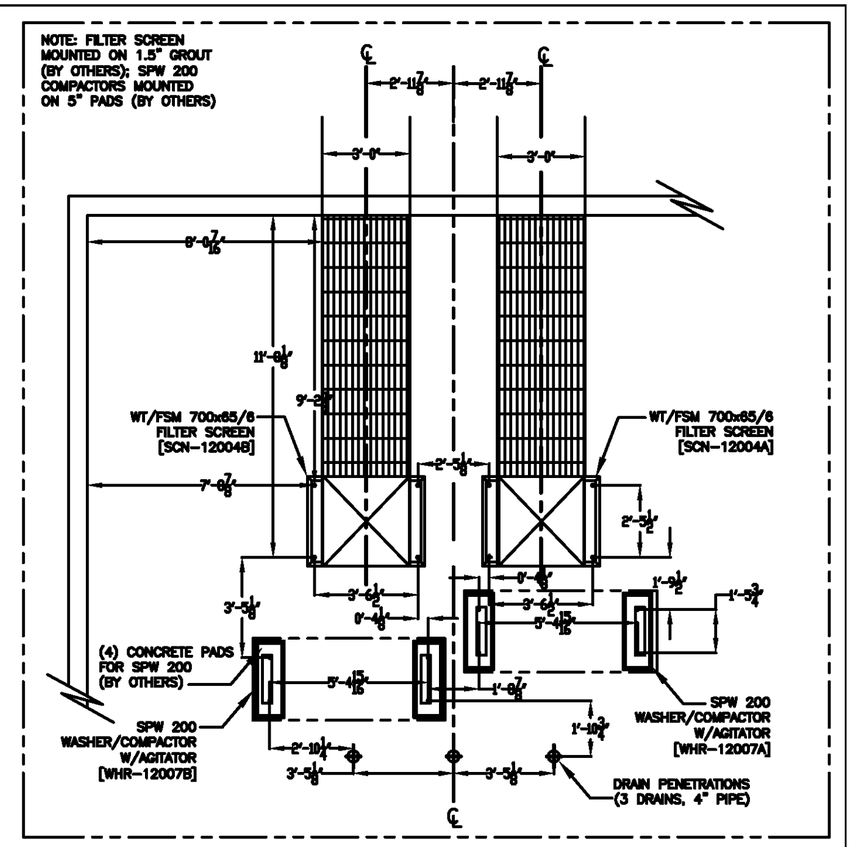

FOOTPRINT DETAIL
EL. 643.50

SHEET 1 of 3

POS	QTY.	DIMENSION			MATERIAL	CHANGE
C	GEN. REV.		1/8/13	SLN		
B	GEN. REV.		5/7/12	JDE		
A	GEN. REV.		3/2/12	JDE		
REV.	ITEM		DATE	BY		

PARENT DWG.

PROPRIETARY DOCUMENT: This document, the information which it contains, and the know-how depicted are the property of KUSTERS ZIMA Corporation and may not be used in any manner detrimental to the Corporation's interest. Reproduction in whole or in part may not be made without written permission from KUSTERS ZIMA Corporation; and if made, shall bear or refer to this notice.

WASTE-TECH
A Division of KUSTERS ZIMA Corporation
Spartanburg SC USA

DRN. BY HDW 02-08-12
CH'D BY

TITLE
G.A. (2) FILTERSCREENS 700x65/6, (2) SPW 200x1200 COMPACTOR

SCALE 1/4"=1'

DWG.NO. SM-C21883 REV. C

SECTION A

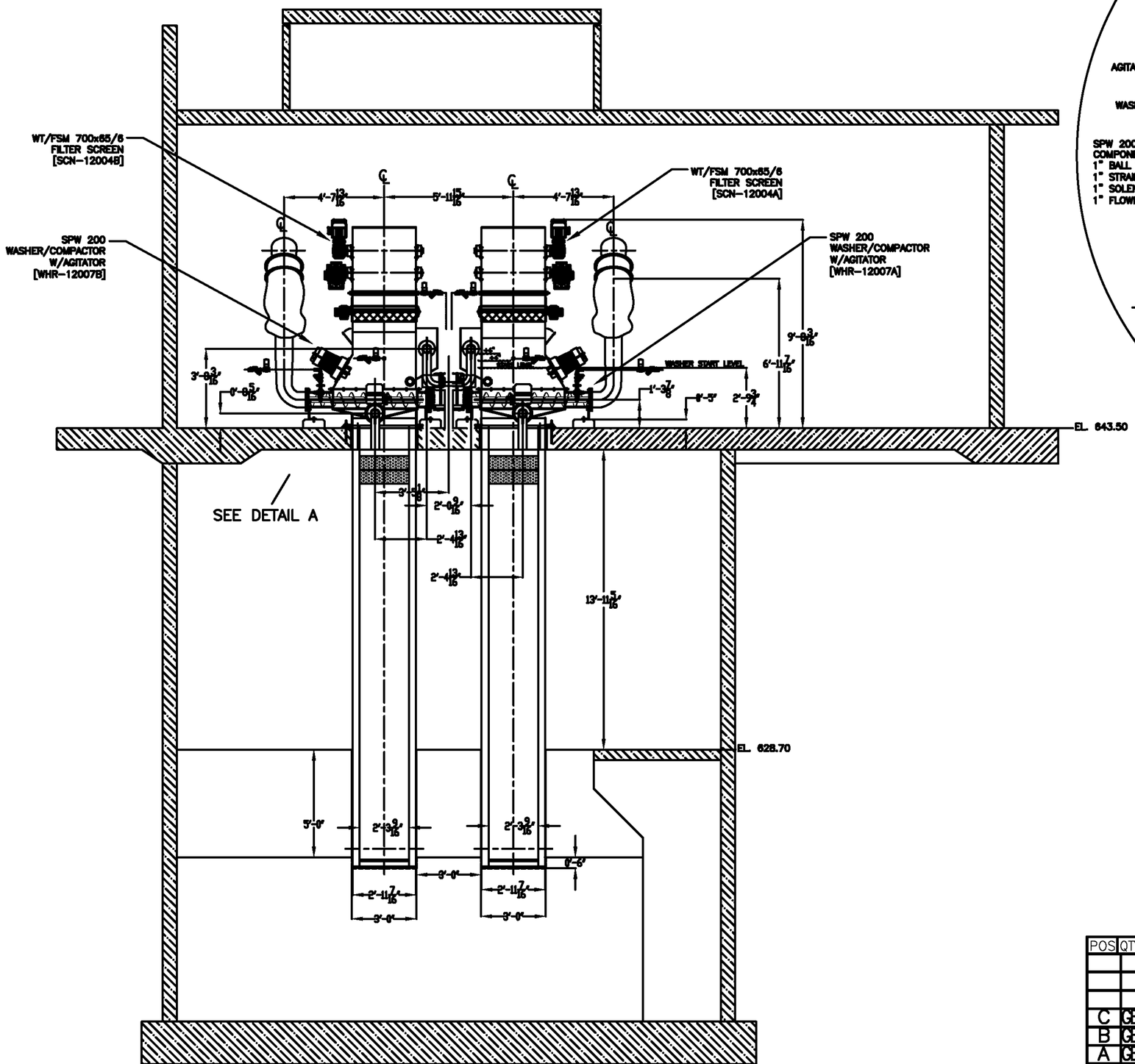

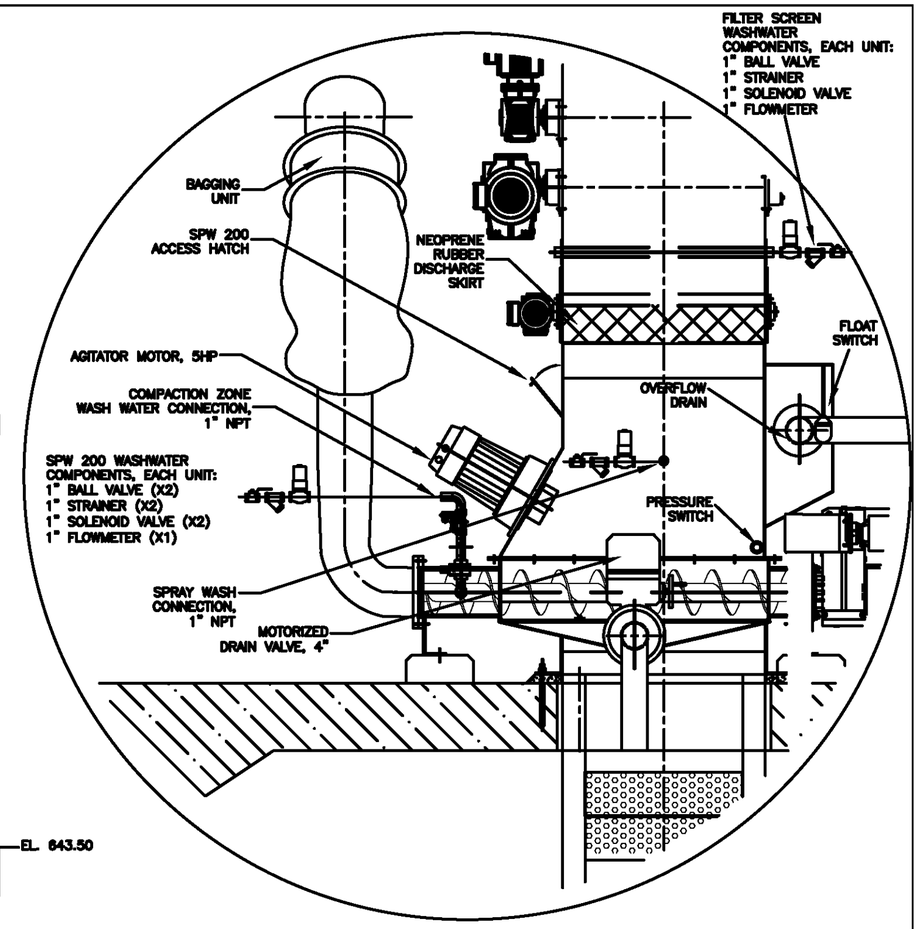

DETAIL A

SHEET 2 of 3

POS	QTY.	DIMENSION			MATERIAL	CHANGE
C	GEN. REV.		1/8/13	SLN		
B	GEN. REV.		5/7/12	JDE		
A	GEN. REV.		3/2/12	JDE		
REV.	ITEM		DATE	BY		

PARENT DWG.

PROPRIETARY DOCUMENT: This document, the information which it contains, and the know-how depicted are the property of KUSTERS ZIMA Corporation and may not be used in any manner detrimental to the Corporation's interest. Reproduction in whole or in part may not be made without written permission from KUSTERS ZIMA Corporation; and if made, shall bear or refer to this notice.

WASTE-TECH
A Division of KUSTERS ZIMA Corporation
Spartanburg SC USA

DRN. BY HDW 02-08-12
CH'D BY
SCALE 1/4"=1'

TITLE
G.A. (2) FILTERSCREENS 700x65/6, (2) SPW 200x1200 COMPACTOR

DWG.NO. SM-C21883 REV. C

SECTION B

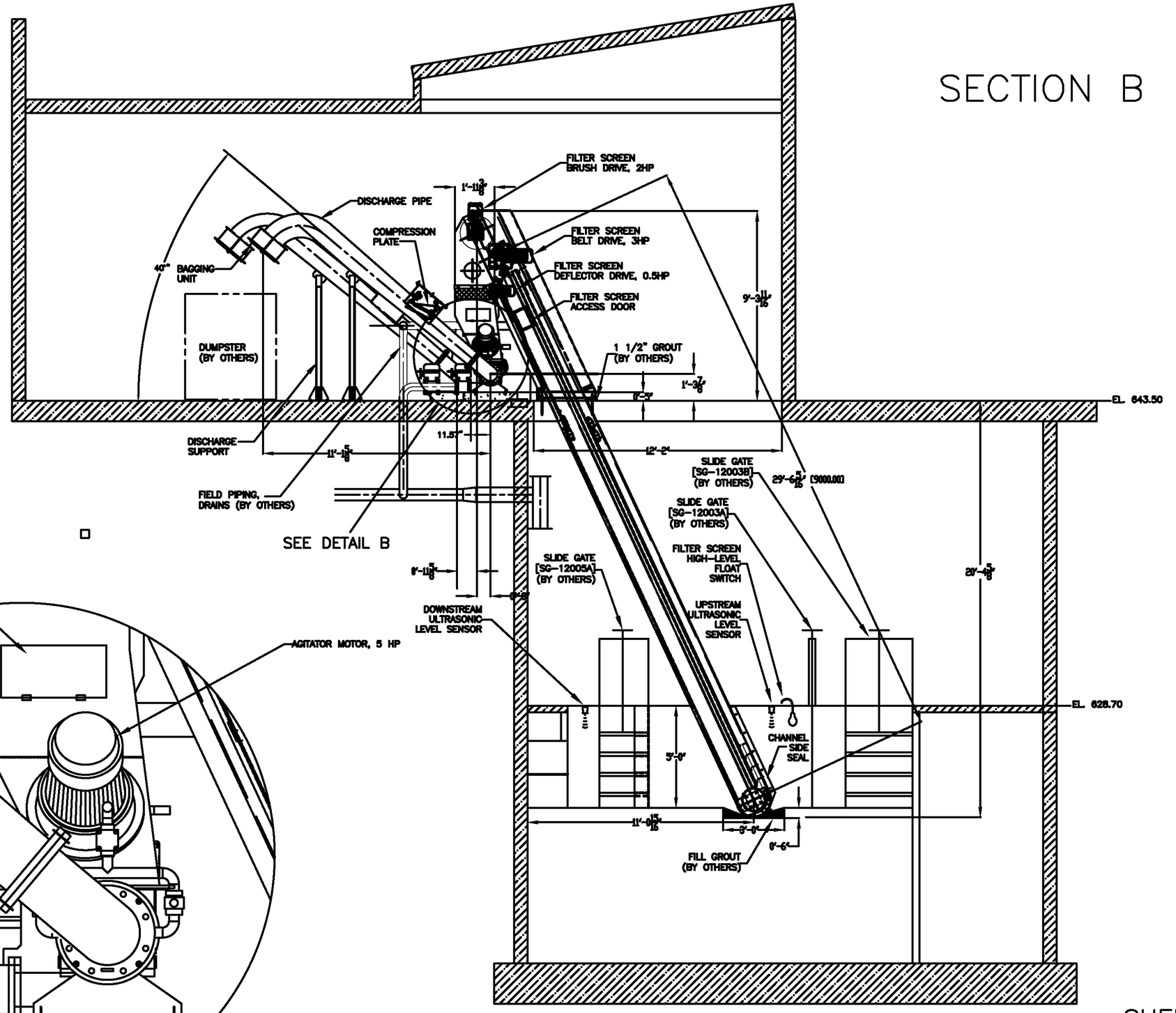

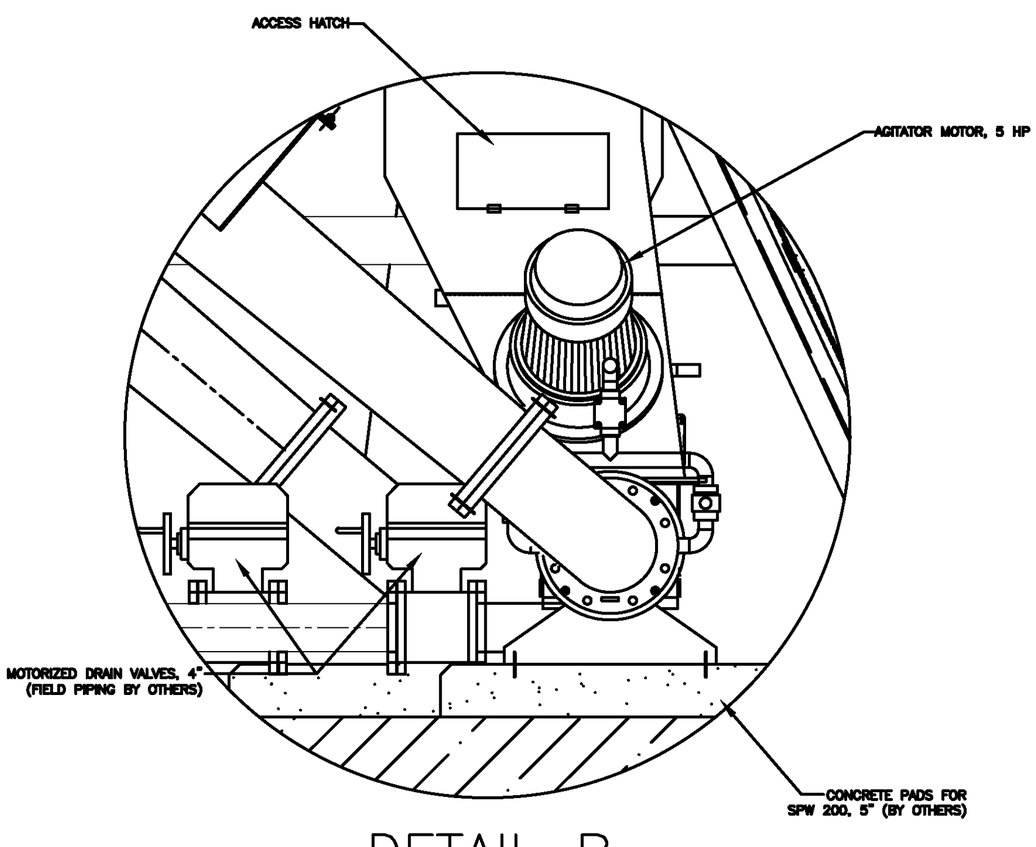

DETAIL B

SHEET 3 of 3

POS	QTY.	DIMENSION	MATERIAL	CHANGE
C	GEN. REV.	1/8/13	SLN	
B	GEN. REV.	5/7/12	JDE	
A	GEN. REV.	3/2/12	JDE	
REV.	ITEM	DATE	BY	

PARENT DWG.

PROPRIETARY DOCUMENT: This document, the information which it contains, and the know-how depicted are the property of KUSTERS ZIMA Corporation and may not be used in any manner detrimental to the Corporation's interest. Reproduction in whole or in part may not be made without written permission from KUSTERS ZIMA Corporation; and if made, shall bear or refer to this notice.

WASTE-TECH
A Division of KÜSTERS ZIMA Corporation
Spartanburg SC USA

DRN. BY HDW 02-20-12
CH'D BY
SCALE 1/4"=1'

TITLE
G.A. (2) FILTERSCREENS 700x65/6, (2) SPW 200x1200 COMPACTOR

DWG.NO. SM-C21883 REV. C

WASTE▪TECH
a division of KUSTERS ZIMA

SECTION 3

CONTROLS

WASTE▪TECH
a division of KUSTERS ZIMA

3.1

SEQUENCE OF OPERATION

WENATCHEE SCREEN CONTROLS
WT56722-05

SEQUENCE OF OPERATION
1-17-2014

Automatic Operation:

Initial Conditions:

Control Power OFF/ON	ON position
Screen LOR	Remote position (PLC operation)
Screen Washwater OCA	Auto position

1. Ultrasonic level transducers shall monitor the upstream water level and the differential water level upstream and downstream of the screen.

2. A float switch shall be used to monitor water levels as a backup to the ultrasonic level transducers.

Sequence of Operation:

The following will start the Screen:

- High differential level on the upstream and downstream sides.
- Start level on the upstream side.
- High level on the upstream side.
- High high level on the upstream side,
- High level float switch.

The screen has 3 operating speeds
- Low speed: approximately 20 fpm 40 Hz
- High speed: approximately 35 fpm 68 Hz
- Storm event speed: approximately 40 fpm 80Hz

Note: In a storm event both screens will be enabled and operate at the highest speed. Both screens will stay at the higher speed until the channel level drops to stop level. Once the level has dropped to stop level the screens will shut off and go back to the lead lag arrangement with only one screen in service at any given time.

Each screen control has an idol timer circuit inside the PLC. If a screen has not been turned on by the system levels in 45 minutes the screen will operate at low speed for 4 minutes (1 full revolution of the). The screen brush, roller, and compactor will also operate. This will keep the screen clean.

If both screens are in remote mode the screens will alternate between the two in a lead lag arrangement. If one screen is OFF the other screen will run without lead lag operation.

High differential or start level will start the lead screen in slow.
High level will start the lead screen in fast.
High level plus 2 inches will switch the screen into storm event speeds.
High high level or the high level float switch will also switch both screens to storm event speeds and give an alarm output.

The Screen will continue to run after the levels have returned to normal for the time set in the Screen Run Off Delay timer in the PLC
The brush and roller will run when the screen runs.

The screen washwater will cycle on and off when the screen is running if the OPEN CLOSED AUTO switch is in the auto position. The cycle time is adjustable on the HMI and can be set to “0” to run the washwater continuously when the screen is running.

In storm event mode the compactor will get a signal and go to straight thru mode.

End of Automatic Operation

Manual Operation:

1. The Screen will remain in operation as long as the SCREEN LOR switch is in the “LOCAL” position and the speed will be selected by the SLOW OFF FAST switch. Placing either switch in the OFF position turns the Screen off. The brush and roller will run when the screen runs.

2. The Screen Washwater SV will open when the SCREEN WASHWATER switch is in the OPEN position. Placing the switch in the OFF position turns the washwater off

End of Manual Operation

Run Conditions

A visible run indicator on the control panel face will be supplied for the following conditions:

a. Control Power ON
b. Screen Running
c. Screen Running fast
d. Brush Running
e. Roller Running

Alarm Conditions

A visible alarm indicator on the face of the control panel will be supplied for the following alarm conditions.

a. Screen Fault
b. Brush Fault
c. Roller Fault

Auxiliary Contacts for Remote Indication

Auxiliary Contacts will be supplied for the following conditions:

a. Screen Running
b. Screen Running fast
c. Screen in Local
d. Screen in Remote
e. Brush Running
f. Roller Running
g. Screen Fault
h. Brush Fault
i. Roller Fault
j. High Level
k. Estop
l. Common Alarm

Ultrasonic Loss Of Echo Alarm

Included in Common Alarm..

Auxiliary Contacts for Lead Lag

Auxiliary Contacts will be supplied for lead lag operation:
These connect between the screen control panels.

a. Lead Status Out
b. Lead Status In

Analog Outputs to SCADA

A 4-20ma analog signal is output for the following:

a. Screen Motor Speed

Timer and Counter Description and Initial Timer Settings

TIMER	DESCRIPTION	VALUE
PLC	Screen Auto Run Off Delay	3 min
PLC	Screen Washwater Cycle Timer	“0” (continuous)

“These are initial settings and will need to be set for plant specific conditions”

WENATCHEE COMPACTOR CONTROLS
WT56722-04

SEQUENCE OF OPERATION
9-25-2012

DEFINITIONS:

- **Lead Compactor** – The compactor associated with the current "lead" screen.
- **Lag Compactor** – The compactor associated with the current "lag" screen.
- **Spiral** – The compactor's screw, which compresses and ejects the screenings.
- **Agitator** – The motor & impeller that agitates the screenings during a wash cycle.
- **Start Level** – The level within the compactor hopper at which the compactor will begin a normal wash cycle.
- **High Level** – The level within the compactor hopper at which the compactor will cease Normal Wash Cycle operation and begin High Level Wash Cycle.
- **High-High Level** – The level within the compactor hopper at which the PLC will issue a "High-High Level" alarm.
- **Spray Wash** – The wash water supply located in the upper area of the compactor hopper, which floods the hopper with water for the wash cycle.
- **Compaction Zone Wash** – The wash water supply (2 nozzles) for final rinse, located in the compaction zone just prior to the entrance of the screenings discharge pipe.
- **Drain Valve** – The electric-actuated valve below the compactor drain connection, which enables the compactor and hopper to fill to the levels necessary to initiate wash cycles.

Automatic Operation:

Initial Conditions:

Control Power OFF/ON	ON position
Spiral HOA	Auto position
Spiral ROF	OFF position
Washwater OCA	Auto position

1. When the Lead Screen begins running, the Lead Compactor's Drain Valve will close, and its Spray Wash solenoid valve will open.

2. An ultrasonic level switch shall monitor the level in the hopper and signal a START level and a HIGH level; a float switch will signal a HIGH-HIGH level.

3. The Compactors shall operate in conjunction with the Screens in a lead/lag arrangement if the Compactor HOA switch is in the AUTO position.

4. The Compactor's Spiral and Agitator will start a **Normal Wash Cycle** when the Start level is reached (or when the Cycle Start pushbutton is pressed). During a Normal Wash Cycle, the Spray Wash solenoid valve will close, the Agitator will begin running, and the

Spiral will begin a “scrub” sequence by running in reverse for the Spiral Reverse Time (set in the PLC, limited to 0-5 seconds), then stop for the Spiral Reverse Stop Time (set in the PLC, 0-5 seconds, initially set at 0 seconds), then run forward for the time set in the Spiral Forward Time (set in the PLC, 0-15 seconds), then stop for the Spiral Forward Stop Time (set in the PLC, 0-5 seconds, initially set at 0 seconds). After the preset number of scrub sequences in the Scrub Sequence Counter (set in the PLC, 1-5 sequences, initial setting 2) the Drain Valve will open, Compaction Zone Wash valve will open, the Agitator will stop, and the Spiral will run forward to evacuate screenings for the time set in the Spiral Evacuation Time (set in the PLC, initially 120 seconds). The Spiral will stop for the Spiral Wait time (set in the PLC, initially 0 seconds), the Compaction Zone Wash valve will close, the Drain Valve will close, and the Spray Wash valve will open, allowing another wash batch to accumulate. The Normal Wash Cycle will repeat when the level in the hopper is at or above Start Level but below High Level.

5. When the HIGH level is reached, the compactor will cease the Normal Wash Cycle and begin the **High Level Wash Cycle**. In this cycle, the Drain Valve will open, the Agitator will start, and the Spiral will run forward for the High Level Evacuation Time (set in the PLC, initially 180 seconds), then stop for the High Level Stop Time (set in the PLC, initially 5 seconds). This cycle will repeat until the level is below High level and the Normal Wash Cycle will continue as described above.

6. When the HIGH-HIGH level is reached, the compactor will continue to run its High Level Wash Cycle, and will signal a High-High level alarm.

7. When a Spiral High Torque condition is detected, the Spiral will reverse its current direction, stop, then try to continue in an attempt to clear the jam. If the jam is not cleared after 3 attempts (adjustable in the PLC) the Spiral will stop and set the Spiral Jammed Alarm. This fault also stops the Agitator, and stops the associated Screen to prevent over-filling. The Alarm Reset pushbutton will reset the alarm.

End of Automatic Operation

<u>Manual Operation:</u>

1. The Spiral will run forward as long as the Spiral HOA switch is in the Hand position and the Spiral ROF switch is in the Forward position.

2. The Spiral will run reverse as long as the Spiral HOA switch is in the Hand position and the Spiral ROF switch is held in the reverse position. The Spiral ROF switch will spring to the OFF position when released. The spiral is intended to run in the reverse direction only for short periods of time to help clear a spiral jam.

3. The spiral will not run as long as the Spiral HOA switch is in the OFF position.

4. The Spray Wash SV will open as long as the Spray Wash OCA switch is in the Open position and will be closed when the Spray Wash OCA switch is in the closed position.

5. The Compaction Zone Wash SV will open as long as the Compaction Zone Wash OCA switch is in the Open position and will be closed when the Compaction Zone Wash OCA switch is in the closed position.

End of Manual Operation

Run Conditions

A visible run indicator on the control panel face will be supplied for the following conditions:

a. Power ON
b. Spiral Forward
c. Spiral Reverse
d. Agitator Running

Alarm Conditions

A visible alarm indicator on the face of the control panel will be supplied for the following alarm conditions.

a. Spiral Fault
b. Agitator fault
c. High-High Level

NOTE: Alarm Reset will clear the fault alarm.

Timer and Counter Description and Initial Timer Settings**

TIMER	DESCRIPTION	VALUE
PLC	Spiral Jam Delay timer	1/2 sec
PLC	Spiral Reverse timer	3 sec
PLC	Spiral Reverse Stop timer	0 sec
PLC	Spiral Forward timer	15 sec
PLC	Spiral Forward Stop timer	0 sec
PLC	Scrub Cycle Counter	2
PLC	Spiral Wait timer	0 sec
PLC	Spiral Evacuation timer (Normal Wash)	120 sec
PLC	Spiral High Level Evacuation timer	180 sec
PLC	Spiral High Level Stop timer	5 sec
PLC	Spiral Jam Reverse timer	5 sec
PLC	Spiral Jam Forward timer	5 sec
PLC	Spiral Jam Clear Attempts	3
PLC	Spiral Post Wash Forward Time	120 sec
PLC	Wash Water Cycle Time ON	0 sec
PLC	Wash Water Cycle Time OFF	0 sec

****These are initial settings and may need to be set for plant specific conditions**

WASTE▪TECH
a division of KUSTERS ZIMA

3.2

ELECTRICAL SCHEMATICS

WASTE-TECH
a division of KUSTERS ZIMA

FILTER SCREEN

UL698A
SHORT CIRCUIT CURRENT RATING: 5KA
RMS SYMMETRICAL, 480V MAXIMUM
460 VOLTS 3 PH 60 HZ 9.37 FLA
3 HP 3.74 FLA LARGEST MOTOR

TORQUE LEGEND

A	6 INCH POUNDS
B	15 INCH POUNDS
C	17 INCH POUNDS
D	22 INCH POUNDS
E	35 INCH POUNDS

NOTE 1: THIS PANEL SHALL BE INSTALLED OBSERVING ALL APPLICABLE STATE AND LOCAL CODES AND AS PER LATEST REVISION OF NEC
NOTE 2: USE ONLY COPPER CONDUCTOR WITH A MINIMUM INSULATION RATING OF 90DEG C

◒ TERMINAL
[16] WIRE NUMBER
▲ REMOTE DEVICE
TERMINAL INTERCONNECT COMPARTMENT
▲ TERMINAL POWERED FROM REMOTE SOURCE – YELLOW WIRE
CAUTION: MAY BE 'HOT' EVEN WHEN MAIN POWER IS OFF.

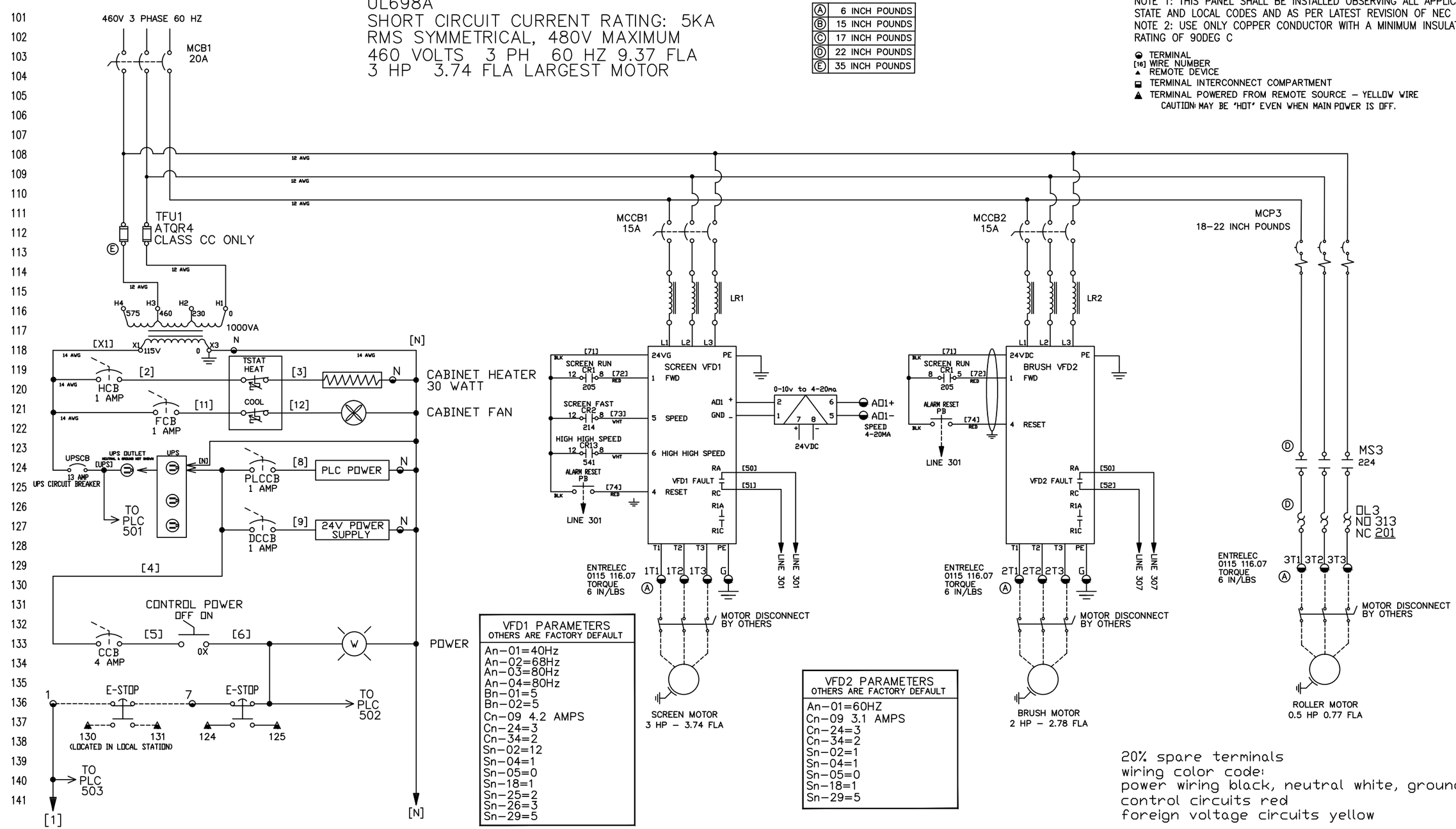

VFD1 PARAMETERS OTHERS ARE FACTORY DEFAULT
An–01=40Hz
An–02=68Hz
An–03=80Hz
An–04=80Hz
Bn–01=5
Bn–02=5
Cn–09 4.2 AMPS
Cn–24=3
Cn–34=2
Sn–02=12
Sn–04=1
Sn–05=0
Sn–18=1
Sn–25=2
Sn–26=3
Sn–29=5

VFD2 PARAMETERS OTHERS ARE FACTORY DEFAULT
An–01=60HZ
Cn–09 3.1 AMPS
Cn–24=3
Cn–34=2
Sn–02=1
Sn–04=1
Sn–05=0
Sn–18=1
Sn–29=5

20% spare terminals
wiring color code:
power wiring black, neutral white, ground green
control circuits red
foreign voltage circuits yellow

REV.	ITEM	DATE	BY
C	FIELD CHANGE	9–25–13	DGS
B	FIELD CHANGE	9–16–13	DGS
A	AS BUILT	9–25–2012	ATC

CLIENT: WENATCHEE
ORDER No.: WT56722–05

PROPRIETARY DOCUMENT
This document, the information which it contains, and the know–how depicted are the property of Kusters Corporation and may not be used in any manner detrimental to the Corporation's interest. Reproduction in whole or in part may not be made without written permission from Kusters Corporation; and if made, shall bear or refer to this notice.

KUSTERS ZIMA CORPORATION
Spartanburg SC USA

DRN. BY	DGS	1–3–12
CH'D BY	ATC	9–25–2012
SHEET	1 OF 7	

TITLE: FILTER SCREEN
DWG.NO.: B784444–1
SCALE: NONE
REV.: C

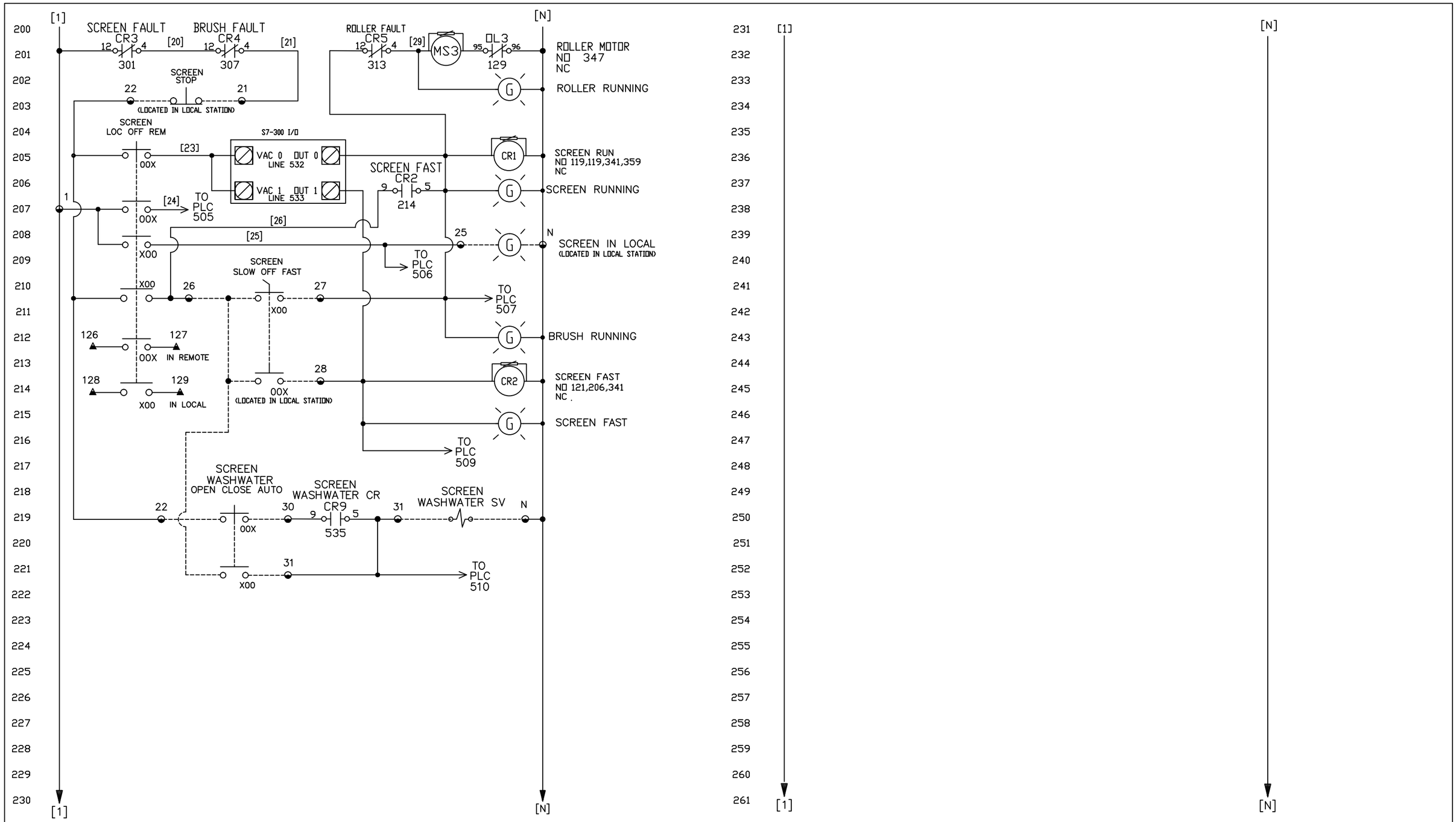

REV.	ITEM	DATE	BY
C	FIELD CHANGE	9-25-13	DGS
B	FIELD CHANGE	9-16-13	DGS
A	AS BUILT	9-25-2012	ATC

CLIENT: WENATCHEE

ORDER No.: WT56722-05

PROPRIETARY DOCUMENT
This document, the information which it contains, and the know-how depicted are the property of Kusters Corporation and may not be used in any manner detrimental to the Corporation's interest. Reproduction in whole or in part may not be made without written permission from Kusters Corporation; and if made, shall bear or refer to this notice.

KUSTERS ZIMA CORPORATION
Spartanburg SC USA

DRN. BY	DGS	1-3-12
CH'D BY	ATC	9-25-2012
SHEET	2 OF 7	

TITLE: FILTER SCREEN

DWG.NO.: B784444-2

SCALE: NONE

REV.: C

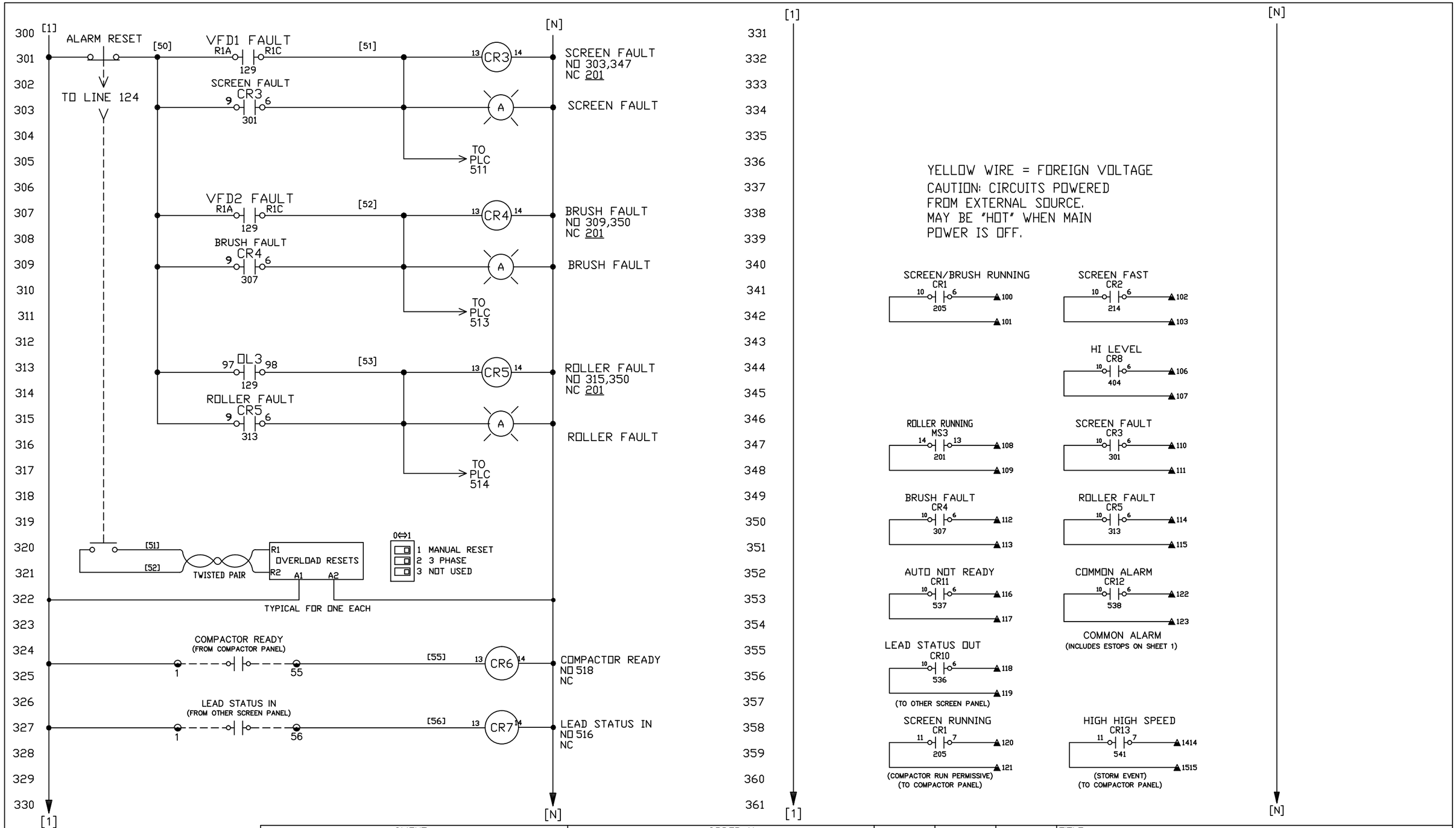

REV.	ITEM	DATE	BY
C	FIELD CHANGE	9-25-13	DGS
B	FIELD CHANGE	9-16-13	DGS
A	AS BUILT	9-25-2012	ATC

CLIENT: WENATCHEE

ORDER No.: WT56722-05

PROPRIETARY DOCUMENT
This document, the information which it contains, and the know-how depicted are the property of Kusters Corporation and may not be used in any manner detrimental to the Corporation's interest. Reproduction in whole or in part may not be made without written permission from Kusters Corporation; and if made, shall bear or refer to this notice.

KUSTERS ZIMA CORPORATION
Spartanburg SC USA

DRN. BY	DGS	1-3-12
CH'D BY		
SHEET	3 OF 7	

TITLE: FILTER SCREEN

DWG.NO.: B784444-3

SCALE: NONE

REV.: C

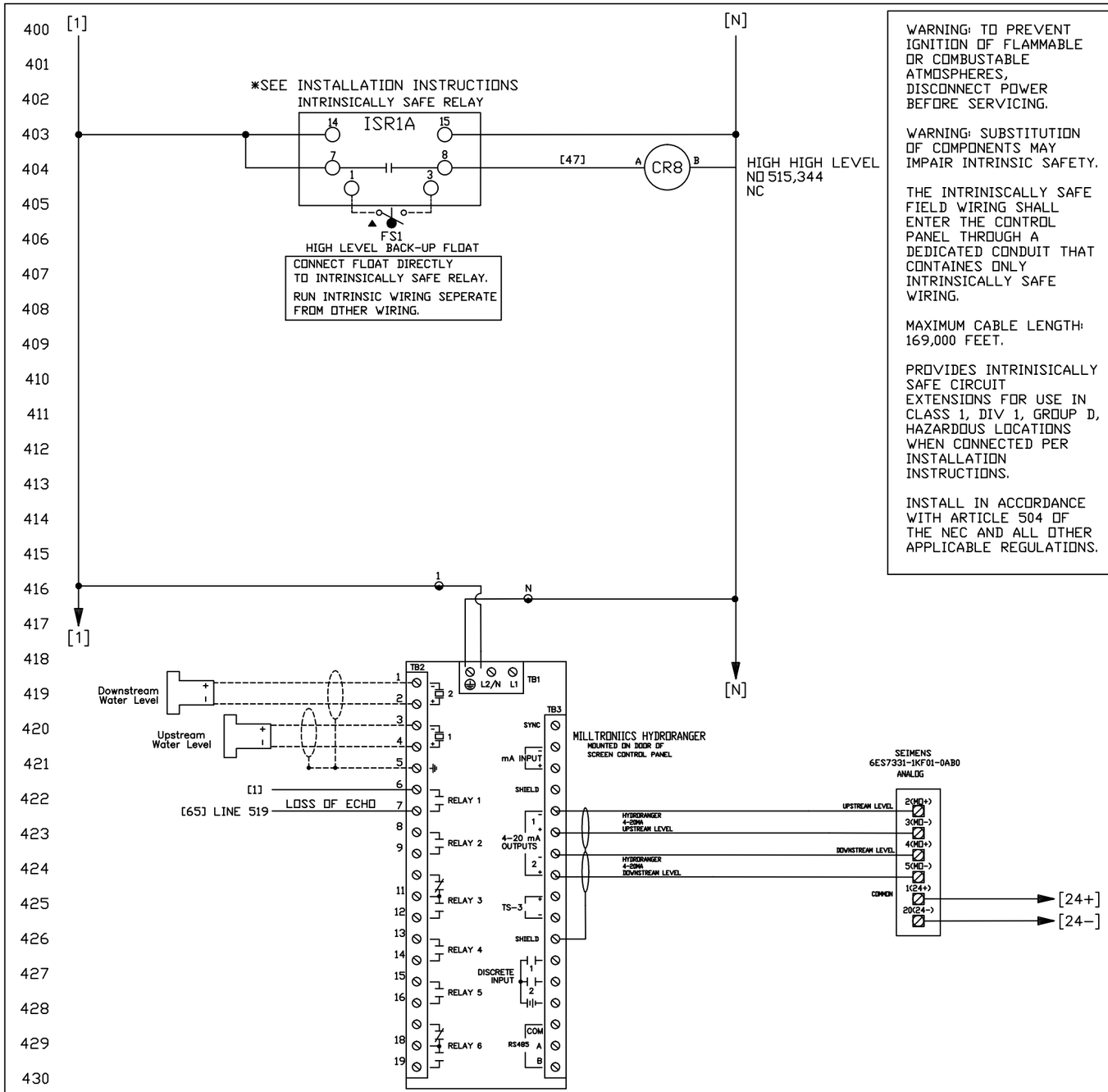

WARNING: TO PREVENT IGNITION OF FLAMMABLE OR COMBUSTABLE ATMOSPHERES, DISCONNECT POWER BEFORE SERVICING.

WARNING: SUBSTITUTION OF COMPONENTS MAY IMPAIR INTRINSIC SAFETY.

THE INTRINISCALLY SAFE FIELD WIRING SHALL ENTER THE CONTROL PANEL THROUGH A DEDICATED CONDUIT THAT CONTAINES ONLY INTRINSICALLY SAFE WIRING.

MAXIMUM CABLE LENGTH: 169,000 FEET.

PROVIDES INTRINISICALLY SAFE CIRCUIT EXTENSIONS FOR USE IN CLASS 1, DIV 1, GROUP D, HAZARDOUS LOCATIONS WHEN CONNECTED PER INSTALLATION INSTRUCTIONS.

INSTALL IN ACCORDANCE WITH ARTICLE 504 OF THE NEC AND ALL OTHER APPLICABLE REGULATIONS.

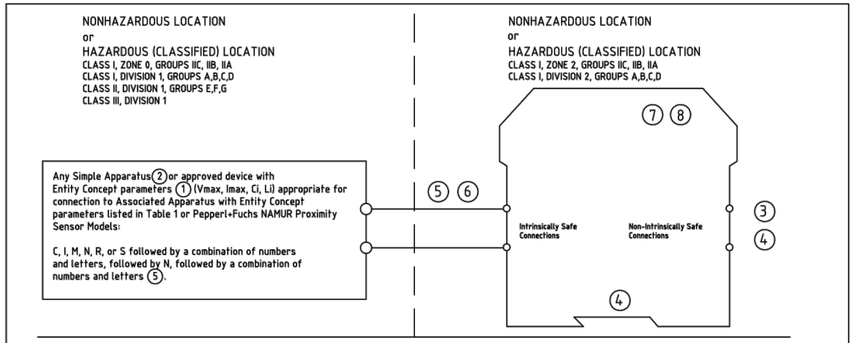

Notes:

(1) The entity concept allows interconnection of intrinsically safe and associated apparatus not specifically examined in combination as a system when the approved values of Uo (or Voc) and Io (or Isc) for the associated apparatus are less than or equal to Ui (or Vmax) and Ii (or Imax) for the intrinsically safe apparatus and the approved values of Co (or Ca) and Lo (or La) for the associated apparatus are greater than Ci + Ccable and Li + Lcable, respectively for the intrinsically safe apparatus.

(2) "Simple Apparatus" is defined as a device that will neither generate nor store more than 1.2V, 0.1A, 20µJ or 25mW.

(3) Wiring methods must be in accordance with the National Electrical Code.

(4) Barriers shall not be connected to any device that uses or generates in excess of 250 Vrms or DC unless it has been determined that the voltage is adequately isolated from the barrier.

(5) For connection to P+F NAMUR proximity sensors, the total inductance and capacitance of the cables must be limited to:

	Groups A,B	Groups C,E	Groups D,F,G
Inductance	82.88mH	296.7mH	742.4mH
Capacitance	0.59uF	3.1uF	9.50uF

(6) Single channel models use either input terminals 1, 2, & 3 or 4, 5, & 6.

(7) Any combination of up to 10 channels of the barriers listed in Table 1 may be connected in parallel and connected to a simple apparatus in a hazardous location. Resistor, if used, must be rated 0.25W minimum if 2–3 channels are connected in parallel and 0.5W minimum if 4–10 channels are connected in parallel. If 2–3 channels are connected in parallel the total cable inductance must be limited to 10mH for Groups A and B, 37mH for Groups C and E, and 80mH for Groups D, F and G. If 4–10 channels are connected in parallel the total cable inductance must be limited to 1mH for Groups A and B, 3.8mH for Groups C and E, and 7mH for Groups D, F, and G.

(8) These barriers must be installed in an enclosure meeting the requirements of ANSI/ISA S82.

Table 1: Entity Parameters

Model Numbers	Terminals	Load Parameters							
		U_o(V) (V_{oc})	I_o(mA) (I_{sc})	C_o(uF) GRPS			L_o(mH) GRPS		
				IIC (A,B)	IIB (C,E)	IIA (D,F,G)	IIC (A,B)	IIB (C,E)	IIA (D,F,G)
KFA*–SOT2–Ex* KFA*–SR2–Ex*.W* KFD2–SRA–Ex* * a number, letter, or number/letter combination	1–3, 4–6	10.6	19.5	1.273	3.820	10.18	84.88	298.7	744.4

Dieses Dokument enthält sicherheitstechnische Angaben. Es darf nicht ohne Absprache mit dem Normenfachmann geändert werden!

This document contains safety-relevant information. It must not be altered without the authorization of the norm expert!

Confidential according to ISO 16016	Only valid as long as released in EDM or with a valid production documentation!			scale: none	date: 2005-Aug-12
PEPPERL+FUCHS	INSTALLATION DRAWING	change notice	respons.	US.JMB	116-0145C
	cULus Listed Transformer	150-0581	approved	US.JAZ	
Twinsburg	Isolated Barriers and Sensors		norm	US.AAS	sheet 1 of 1

Released EDM checkout 2006-MAY-03

REV.	ITEM	DATE	BY
C	FIELD CHANGE	9–25–13	DGS
B	FIELD CHANGE	9–16–13	DGS
A	AS BUILT	9-25-2012	ATC

CLIENT: WENATCHEE

ORDER No.: WT56722–05

PROPRIETARY DOCUMENT
This document, the information which it contains, and the know–how depicted are the property of Kusters Corporation and may not be used in any manner detrimental to the Corporation's interest. Reproduction in whole or in part may not be made without written permission from Kusters Corporation; and if made, shall bear or refer to this notice.

KUSTERS ZIMA CORPORATION
Spartanburg SC USA

DRN. BY	DGS	1-3-12
CH'D BY		
SHEET 4 OF 7		

TITLE: FILTER SCREEN

DWG.NO. B784444–4 | SCALE NONE | REV. C

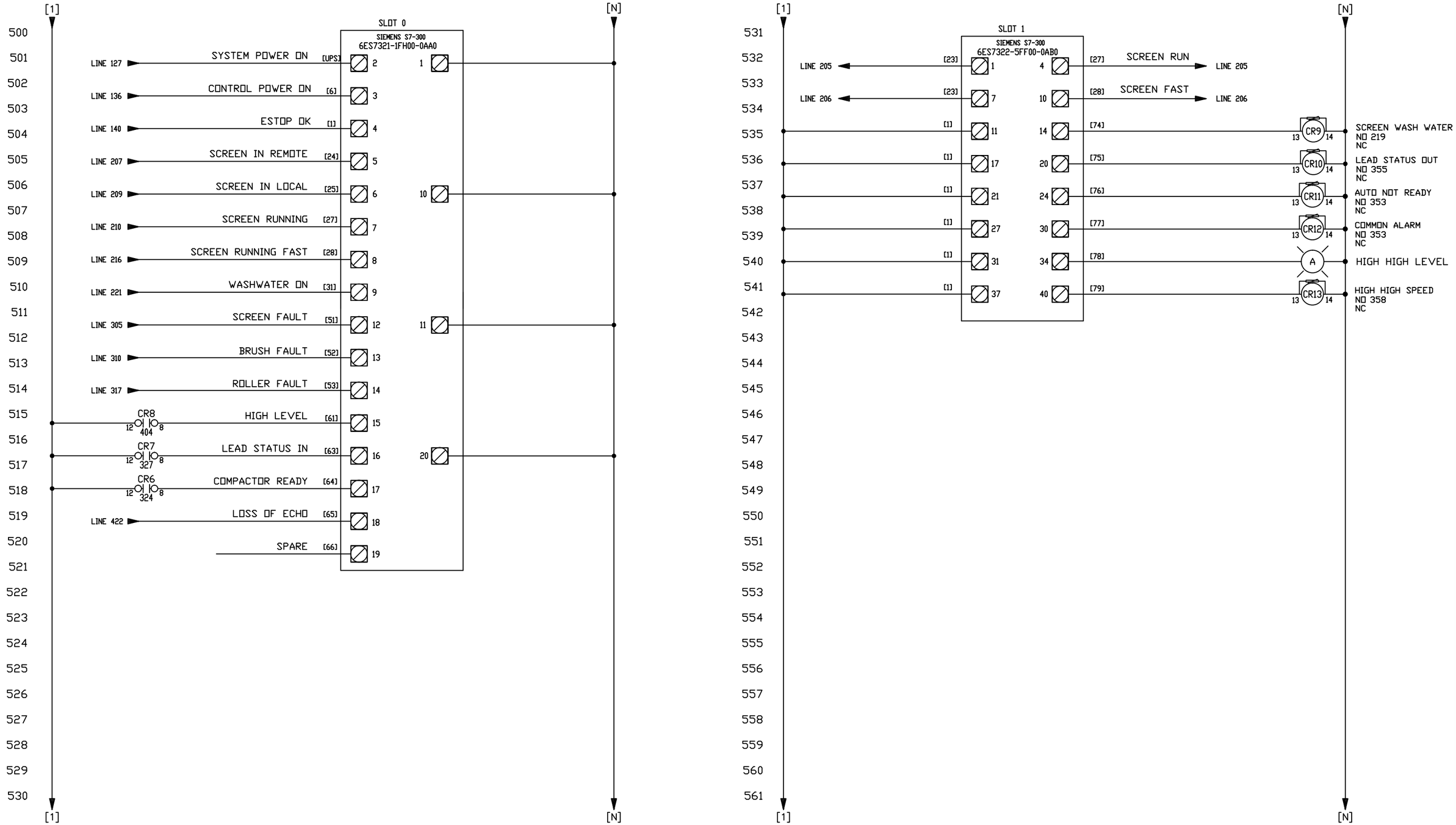

REV.	ITEM	DATE	BY
C	FIELD CHANGE	9-25-13	DGS
B	FIELD CHANGE	9-16-13	DGS
A	AS BUILT	9-25-2012	ATC

CLIENT: WENATCHEE

ORDER No.: WT56722-05

PROPRIETARY DOCUMENT
This document, the information which it contains, and the know-how depicted are the property of Kusters Corporation and may not be used in any manner detrimental to the Corporation's interest. Reproduction in whole or in part may not be made without written permission from Kusters Corporation; and if made, shall bear or refer to this notice.

KUSTERS ZIMA CORPORATION
Spartanburg SC USA

DRN. BY	DGS	1-3-12
CH'D BY	ATC	9-25-2012
SHEET	5 OF 7	

TITLE: FILTER SCREEN

DWG.NO.: B784444-5

SCALE: NONE

REV.: C

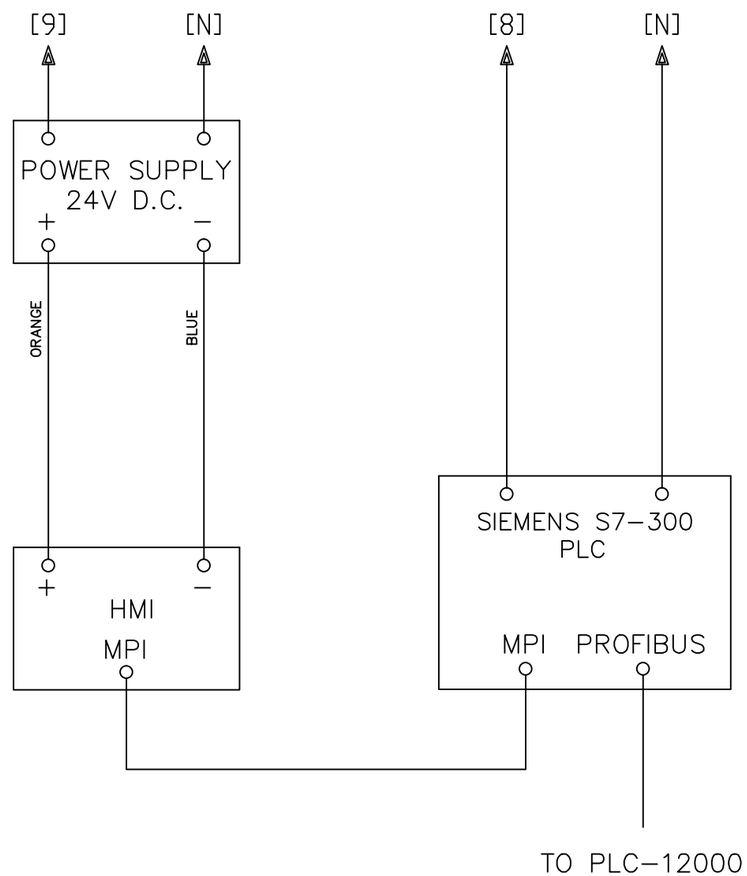

PLC TAG LIST:

I0.0	SYSTEM POWER ON
I0.1	CONTROL POWER ON
I0.2	ESTOP OK
I0.3	SCREEN IN REMOTE
I0.4	SCREEN IN LOCAL
I0.5	SCREEN RUNNING
I0.6	SCREEN RUNNING FAST
I0.7	WASH WATER ON
I1.0	SCREEN FAULT
I1.1	BRUSH FAULT
I1.2	ROLLER FAULT
I1.3	HIGH LEVEL
I1.4	LEAD STATUS IN
I1.5	COMPACTOR READY
I1.6	LOSS OF ECHO
I1.7	SPARE
Q0.0	SCREEN RUN SLOW
Q0.1	SCREEN RUN FAST
Q0.2	SCREEN WASH WATER
Q0.3	LEAD STATUS OUT
Q0.4	AUTO NOT READY
Q0.5	COMMON ALARM
Q0.6	HIGH HIGH LEVEL
Q0.7	SPARE

REV.	ITEM	DATE	BY
C	FIELD CHANGE	9−25−13	DGS
B	FIELD CHANGE	9−16−13	DGS
A	AS BUILT	9−25−2012	ATC

CLIENT: WENATCHEE

ORDER No.: WT56722−05

PROPRIETARY DOCUMENT
This document, the information which it contains, and the know−how depicted are the property of Kusters Corporation and may not be used in any manner detrimental to the Corporation's interest. Reproduction in whole or in part may not be made without written permission from Kusters Corporation; and if made, shall bear or refer to this notice.

KUSTERS ZIMA CORPORATION
Spartanburg SC USA

DRN. BY	DGS	1−3−12
CH'D BY	ATC	9−25−2012
SHEET	6 OF 7	

TITLE: FILTER SCREEN

DWG.NO.: B784444−6

SCALE: NONE

REV.: C

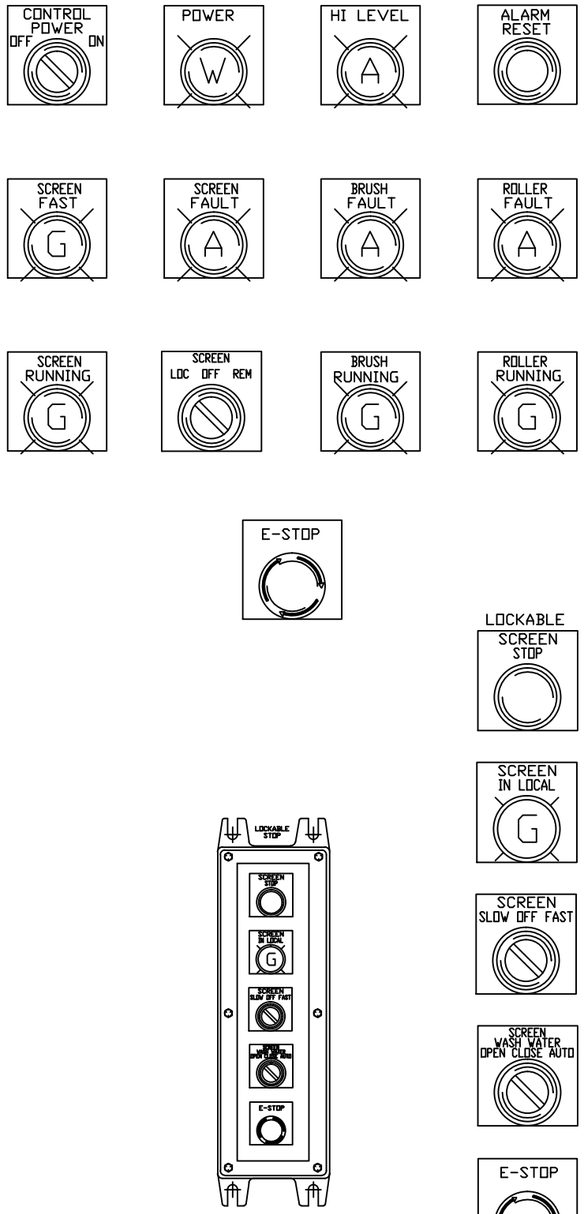

OPERATOR STATION
NEMA 7

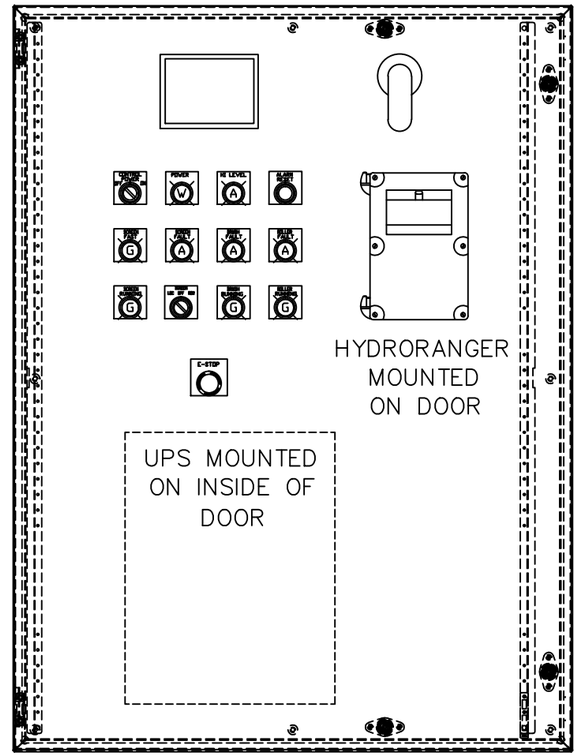

MAIN CONTROL PANEL
SIZE 48 X 36 X 12
NEMA 12

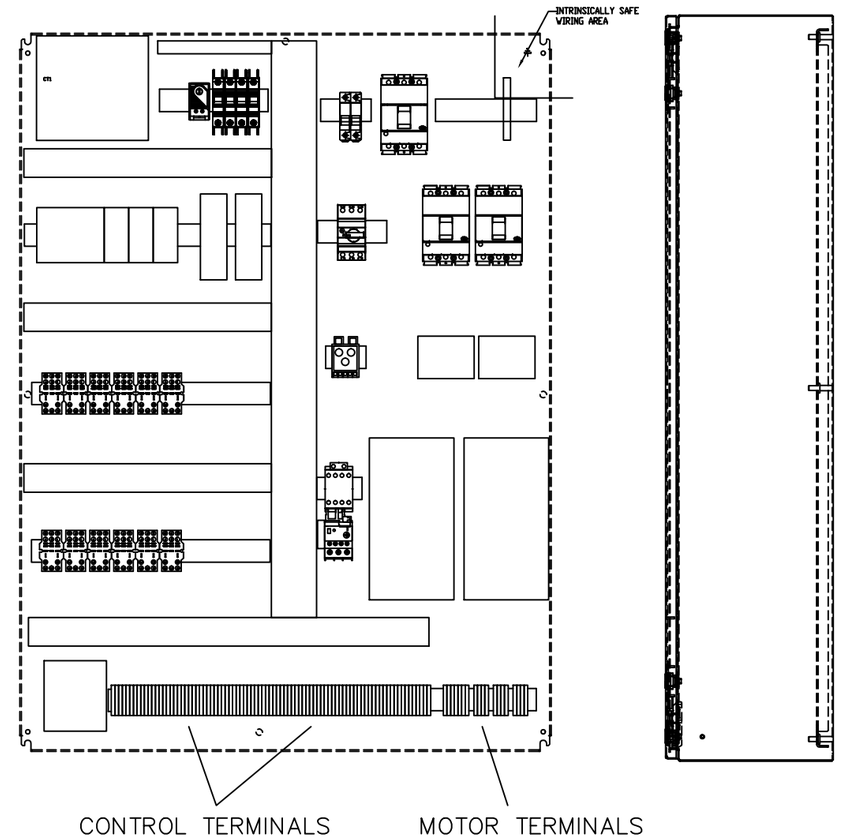

INTERNAL MARKINGS:

(SHALL BE PLACED ON THE INTRINSICALLY SAFE AREA OF THE PANEL):

WARNING: SUBSTITUTION OF COMPONENTS MAY IMPAIR INTRINSIC SAFETY.

WARNING: TO PREVENT IGNITION OF FLAMMABLE OR COMBUSTABLE ATMOSPHERES, DISCONNECT POWER BEFORE SERVICING.

(SHALL BE PLACED ADJACENT TO INTRINSICALLY SAFE FIELD WIRING TERMINALS)

INTRINSICALLY SAFE FIELD WIRING TERMINALS

WARNING: TO PREVENT IGNITION OF FLAMMABLE OR COMBUSTABLE ATMOSPHERES, DISCONNECT POWER BEFORE SERVICING.

EXTERNAL MARKINGS:

(SHALL BE PLACED ADJACENT TO INTENDED WIRING OPENINGS)

INTRINSICALLY SAFE WIRING ONLY.

PROVIDES INTRINISICALLY SAFE CIRCUIT EXTENSIONS FOR USE IN CLASS 1, DIV 1, GROUP D, HAZARDOUS LOCATIONS WHEN CONNECTED PER INSTALLATION INSTRUCTIONS.

REV.	ITEM	DATE	BY
C	FIELD CHANGE	9-25-13	DGS
B	FIELD CHANGE	9-16-13	DGS
A	AS BUILT	9-25-2012	ATC

CLIENT: WENATCHEE

ORDER No.: WT56722-05

PROPRIETARY DOCUMENT
This document, the information which it contains, and the know-how depicted are the property of Kusters Corporation and may not be used in any manner detrimental to the Corporation's interest. Reproduction in whole or in part may not be made without written permission from Kusters Corporation; and if made, shall bear or refer to this notice.

KUSTERS ZIMA CORPORATION
Spartanburg SC USA

DRN. BY	DGS	1-3-12
CH'D BY	ATC	9-25-2012
SHEET	7 OF 7	

TITLE: FILTER SCREEN

DWG.NO.: B784444-7

SCALE: NONE

REV.: C

WASTE▪TECH
a division of KUSTERS ZIMA

SPW 200 COMPACTOR w/AGITATOR

UL698A
SHORT CIRCUIT CURRENT: 5KA
RMS SYMMETRICAL, 480V MAXIMUM
460 VOLTS 3 PH 60 HZ 13.16 FLA
5 HP 7.34 FLA LARGEST MOTOR

TORQUE LEGEND

Ⓐ	6 INCH POUNDS
Ⓑ	15 INCH POUNDS
Ⓒ	17 INCH POUNDS
Ⓓ	22 INCH POUNDS
Ⓔ	35 INCH POUNDS

NOTE 1: THIS PANEL SHALL BE INSTALLED OBSERVING ALL APPLICABLE STATE AND LOCAL CODES AND AS PER LATEST REVISION OF NEC
NOTE 2: USE ONLY COPPER CONDUCTOR WITH A MINIMUM INSULATION RATING OF 90DEG C

◒ TERMINAL
[16] WIRE NUMBER
▲ REMOTE DEVICE
▬ TERMINAL INTERCONNECT COMPARTMENT
▲ TERMINAL POWERED FROM REMOTE SOURCE – YELLOW WIRE
CAUTION: MAY BE 'HOT' EVEN WHEN MAIN POWER IS OFF.

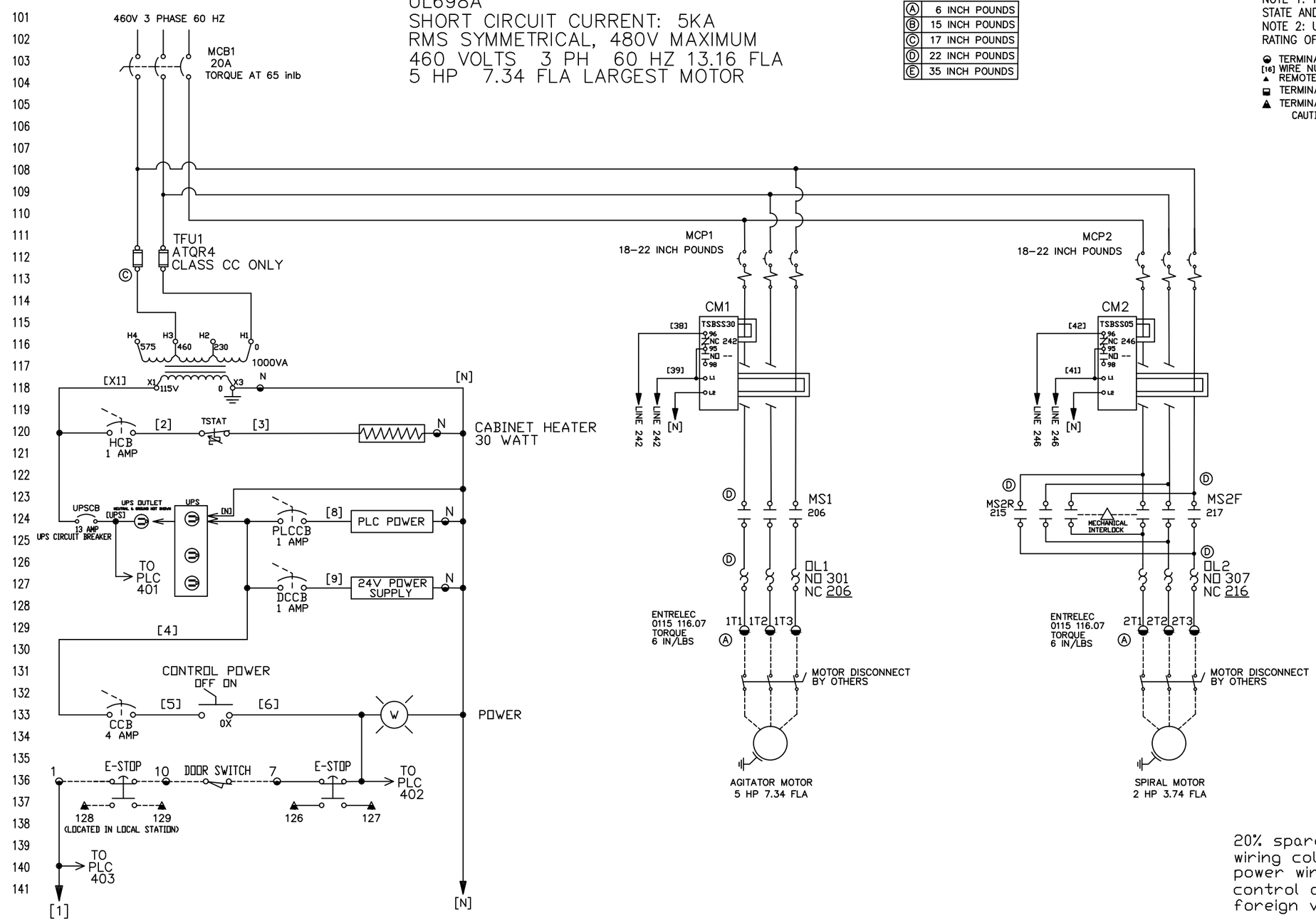

20% spare terminals
wiring color code:
power wiring black, neutral white, ground green
control circuits red
foreign voltage circuits yellow

REV.	ITEM	DATE	BY
C	FIELD CHANGE	9–25–13	DGS
B	AS STARTED	11–28–12	DGS
A	AS BUILT	9–25–2012	ATC

CLIENT: WENATCHEE

ORDER No.: WT56722–04

PROPRIETARY DOCUMENT
This document, the information which it contains, and the know–how depicted are the property of Kusters Corporation and may not be used in any manner detrimental to the Corporation's interest. Reproduction in whole or in part may not be made without written permission from Kusters Corporation; and if made, shall bear or refer to this notice.

KUSTERS ZIMA CORPORATION
Spartanburg SC USA

DRN. BY	DGS	2–15–12
CH'D BY	ATC	9–25–2012
SHEET	1 OF 7	

TITLE: WASHER COMPACTOR

DWG.NO. B784443–1 | SCALE NONE | REV. C

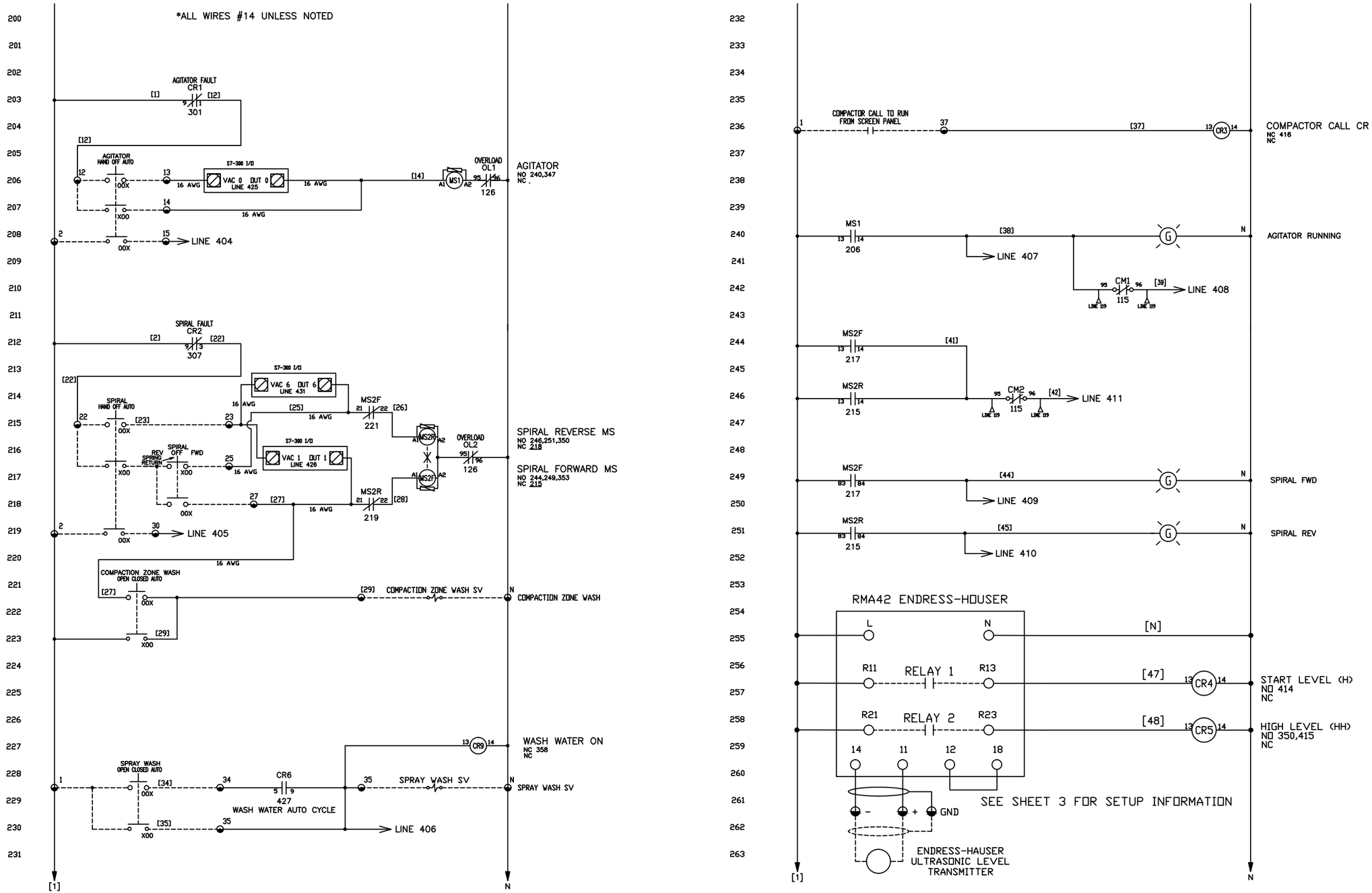

REV.	ITEM	DATE	BY
C	FIELD CHANGE	9-25-13	DGS
B	AS STARTED	11-28-12	DGS
A	AS BUILT	9-25-2012	ATC

CLIENT: WENATCHEE

ORDER No.: WT56722-04

PROPRIETARY DOCUMENT
This document, the information which it contains, and the know-how depicted are the property of Kusters Corporation and may not be used in any manner detrimental to the Corporation's interest. Reproduction in whole or in part may not be made without written permission from Kusters Corporation; and if made, shall bear or refer to this notice.

KUSTERS ZIMA CORPORATION
Spartanburg SC USA

DRN. BY	DGS	2-15-12
CH'D BY	ATC	9-25-2012
SHEET	2 OF 7	

TITLE: WASHER COMPACTOR

DWG.NO.: B784443-2

SCALE: NONE

REV.: C

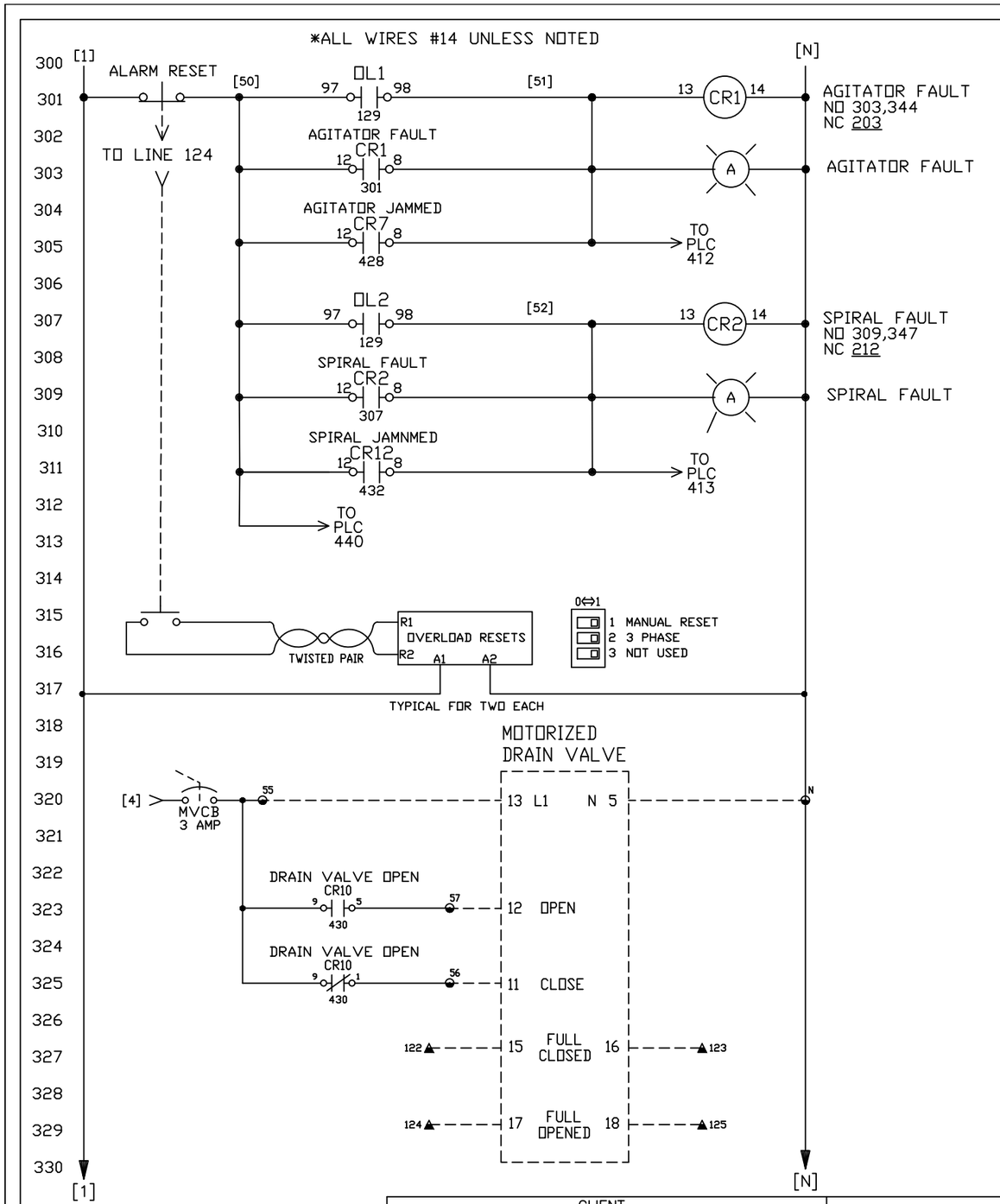

ENDRESS HAUSER SET POINT RELAY SETTINGS

PLEASE NOTE FIELD CHANGES AS SOME SETTINGS MAY CHANGE

ANALOG 1 IN:
CURRENT
4–20 MA
DECIMAL POINT XXXX.X
UNIT %

RELAY #1 (START LEVEL)
ANALOG #1 INPUT
SETPOINT 50
TIMEDELAY 5
NORMALLY OPEN
FAILURE MODE NORMALLY CLOSED

RELAY #2 (HIGH LEVEL)
ANALOG #1 INPUT
SETPOINT 70
TIMEDELAY 5
NORMALLY OPEN
FAILURE MODE NORMALLY OPEN

TO CHANGE SETPOINT:
PRESS E
SCROLL TO EXPERT, PRESS E
PRESS E 4 TIMES TO SEE DIRECT ACCESS
SCROLL TO OUTPUT, PRESS E
SCROLL TO RELAY 1 OR RELAY 2, PRESS E
SCROLL TO SETPOINT, PRESS E
EDIT SETPOINT VALUE
PRESS E THRU REMAINING DIGITS
SCROLL TO X BACK, PRESS E
CONTINUE SCROLLING TO X BACK AND
PRESSING E TO EXIT ALL MENUES

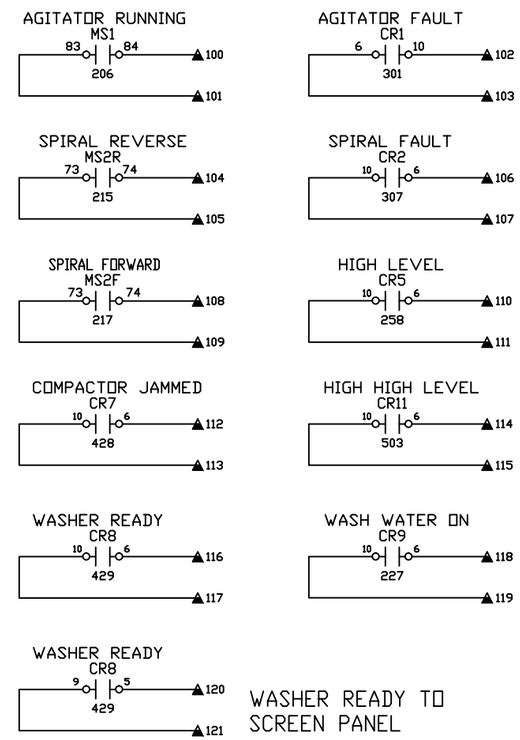

WASHER READY TO SCREEN PANEL

#14 YELLOW WIRE = FOREIGN VOLTAGE
CAUTION: CIRCUITS POWERED FROM EXTERNAL SOURCE. MAY BE "HOT" WHEN MAIN POWER IS OFF.

REV.	ITEM	DATE	BY
C	FIELD CHANGE	9–25–13	DGS
B	AS STARTED	11–28–12	DGS
A	AS BUILT	9–25–2012	ATC

CLIENT: WENATCHEE

ORDER No.: WT56722–04

PROPRIETARY DOCUMENT
This document, the information which it contains, and the know–how depicted are the property of Kusters Corporation and may not be used in any manner detrimental to the Corporation's interest. Reproduction in whole or in part may not be made without written permission from Kusters Corporation; and if made, shall bear or refer to this notice.

KUSTERS ZIMA CORPORATION
Spartanburg SC USA

DRN. BY	DGS	2–15–12
CH'D BY	ATC	9–25–2012
SHEET	3 OF 7	

TITLE: WASHER COMPACTOR

DWG.NO.: B784443–3

SCALE: NONE

REV.: C

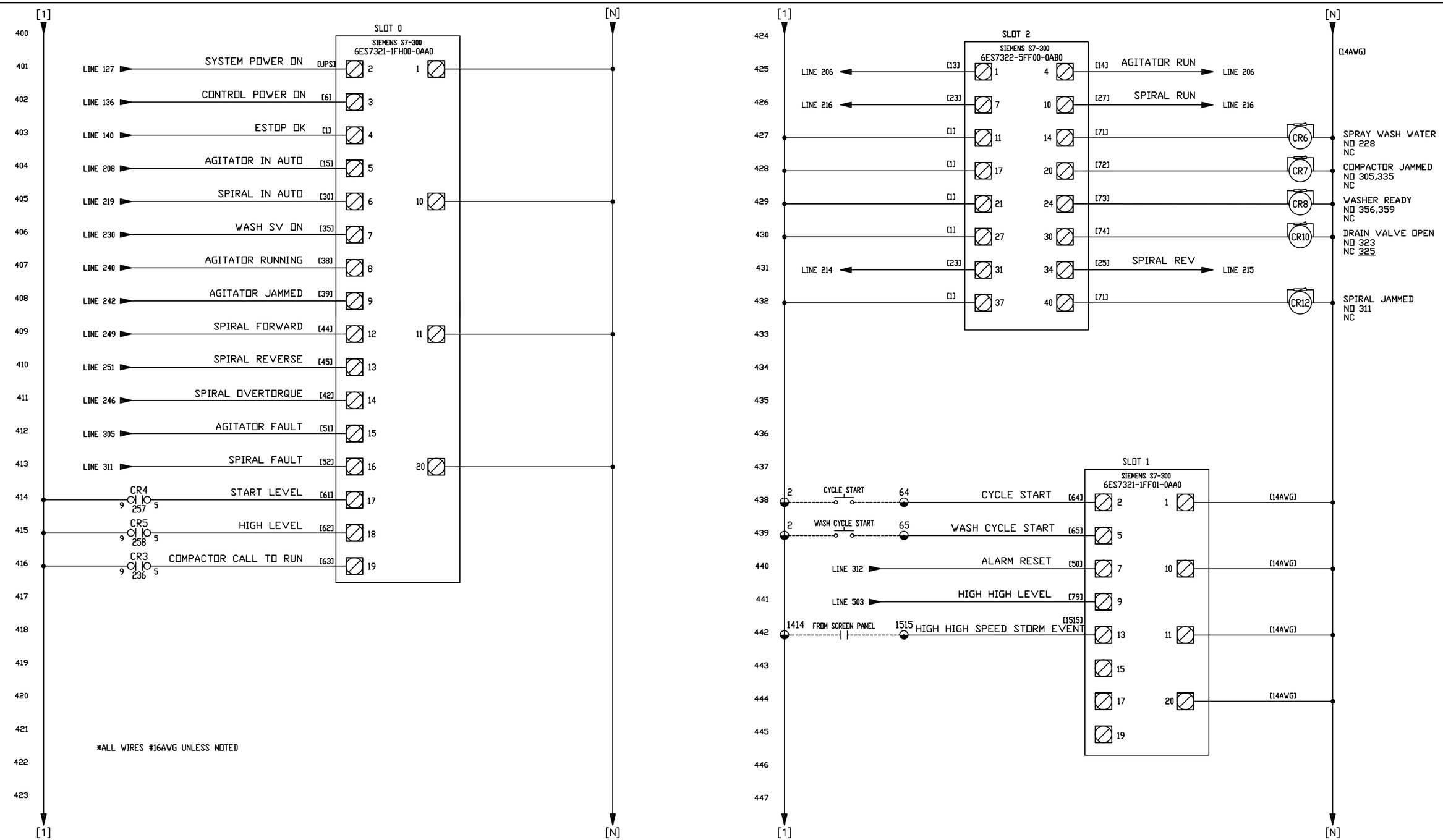

REV.	ITEM	DATE	BY
C	FIELD CHANGE	9-25-13	DGS
B	AS STARTED	11-28-12	DGS
A	AS BUILT	9-25-20121	ATC

CLIENT
WENATCHEE

ORDER No.
WT56722-04

PROPRIETARY DOCUMENT
This document, the information which it contains, and the know-how depicted are the property of Kusters Corporation and may not be used in any manner detrimental to the Corporation's interest. Reproduction in whole or in part may not be made without written permission from Kusters Corporation; and if made, shall bear or refer to this notice.

KUSTERS ZIMA CORPORATION
Spartanburg SC USA

DRN. BY	DGS	2-15-12
CH'D BY	ATC	9-25-2012

SHEET 4 OF 7

TITLE
WASHER COMPACTOR

DWG.NO. B784443-4
SCALE NONE
REV. C

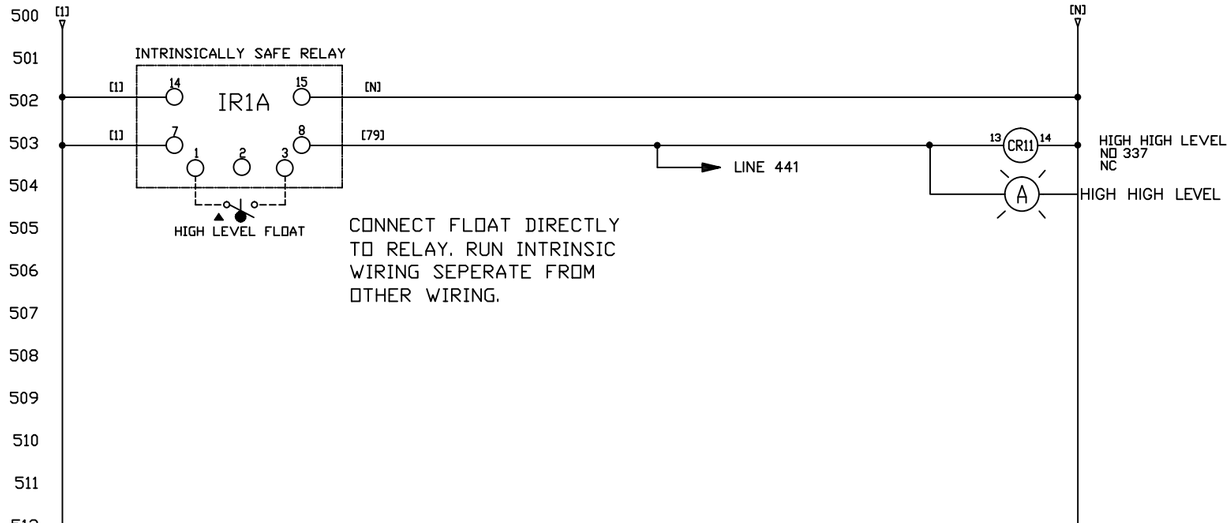

CONNECT FLOAT DIRECTLY TO RELAY. RUN INTRINSIC WIRING SEPERATE FROM OTHER WIRING.

WARNING: TO PREVENT IGNITION OF FLAMMABLE OR COMBUSTABLE ATMOSPHERES, DISCONNECT POWER BEFORE SERVICING.

WARNING: SUBSTITUTION OF COMPONENTS MAY IMPAIR INTRINSIC SAFETY.

MAXIMUM CABLE LENGTH: 169,000 FEET FOR GROUP D.

THE INTRINISCALLY SAFE FIELD WIRING SHALL ENTER THE CONTROL PANEL THROUGH A DEDICATED CONDUIT THAT CONTAINES ONLY INTRINSICALLY SAFE WIRING.

PROVIDES INTRINISICALLY SAFE CIRCUIT EXTENSIONS FOR USE IN CLASS 1, DIV 1, GROUP D, HAZARDOUS LOCATIONS WHEN CONNECTED PER INSTALLATION INSTRUCTIONS.

INSTALL IN ACCORDANCE WITH ARTICLE 504 OF THE NEC AND ALL OTHER APPLICABLE REGULATIONS.

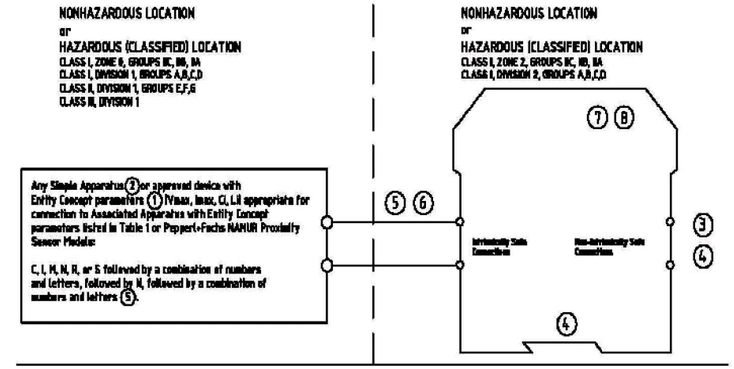

Notes:

① The entity concept allows interconnection of intrinsically safe and associated apparatus not specifically examined in combination as a system when the approved values of Uo (or Voc) and Io (or Isc) for the associated apparatus are less than or equal to Ui (or Vmax) and Ii (or Imax) for the intrinsically safe apparatus and the approved values of Co (or Ca) and Lo (or La) for the associated apparatus are greater than Ci + Ccable and Li + Lcable, respectively for the intrinsically safe apparatus.

② "Simple Apparatus" is defined as a device that will neither generate nor store more than 1.2V, 0.1A, 20µJ or 25mW.

③ Wiring methods must be in accordance with the National Electrical Code.

④ Barriers shall not be connected to any device that uses or generates in excess of 250 Vrms or DC unless it has been determined that the voltage is adequately isolated from the barrier.

⑤ For connection to P+F NAMUR proximity sensors, the total inductance and capacitance of the cables must be limited to:

	Groups A,B	Groups C,E	Groups D,F,G
Inductance	82.88mH	298.7mH	742.4mH
Capacitance	0.59uF	3.1uF	9.50uF

⑥ Single channel models use either input terminals 1, 2, & 3 or 4, 5, & 6.

⑦ Any combination of up to 10 channels of the barriers listed in Table 1 may be connected in parallel and connected to a simple apparatus in a hazardous location. Resistor, if used, must be rated 0.25W minimum if 2–3 channels are connected in parallel and 0.5W minimum if 4–10 channels are connected in parallel. If 2–3 channels are connected in parallel the total cable inductance must be limited to 10mH for Groups A and B, 37mH for Groups C and E, and 80mH for Groups D, F and G. If 4–10 channels are connected in parallel the total cable inductance must be limited to 1mH for Groups A and B, 3.8mH for Groups C and E, and 7mH for Groups D, F, and G.

⑧ These barriers must be installed in an enclosure meeting the requirements of ANSI/ISA S82.

Table 1: Entity Parameters

Model Numbers	Terminals	Load Parameters							
		U_o(V) (V_{oc})	I_o(mA) (I_{sc})	C_o(uF) GRPS			L_o(mH) GRPS		
				IIC (A,B)	IIB (C,E)	IIA (D,F,G)	IIC (A,B)	IIB (C,E)	IIA (D,F,G)
KFA*-SOT2-Ex* KFA*-SR2-Ex*.W* KFD2-SRA-Ex* * a number, letter, or number/letter combination	1–3, 4–6	10.6	19.5	1.273	3.820	10.18	84.88	298.7	744.4

Dieses Dokument enthält sicherheitstechnische Angaben. Es darf nicht ohne Absprache mit dem Normenfachmann geändert werden!
This document contains safety-relevant information. It must not be altered without the authorization of the norm expert!
Confidential according to ISO 16016 | Only valid as long as released in EDM or with a valid production documentation!

PEPPERL+FUCHS Twinsburg	INSTALLATION DRAWING cULus Listed Transformer Isolated Barriers and Sensors	change notice	respons.	US.JMB	scale: none / date: 2005-Aug-12
		150-0581	approved	US.JAZ	116-0145C
			norm	US.AAS	sheet 1 of 1

Released EDM checkout 2006-MAY-03

REV.	ITEM	DATE	BY
C	FIELD CHANGE	9–25–13	DGS
B	AS STARTED	11–28–12	DGS
A	AS BUILT	9–25–2012	ATC

CLIENT: WENATCHEE

ORDER No.: WT56722.04

PROPRIETARY DOCUMENT
This document, the information which it contains, and the know–how depicted are the property of Kusters Corporation and may not be used in any manner detrimental to the Corporation's interest. Reproduction in whole or in part may not be made without written permission from Kusters Corporation; and if made, shall bear or refer to this notice.

KUSTERS ZIMA CORPORATION
Spartanburg SC USA

DRN. BY	DGS	2–15–12
CH'D BY	ATC	9–25–2012
SHEET	5 OF 7	

TITLE: WASHER COMPACTOR

DWG.NO.: B784443–5

SCALE: NONE

REV.: C

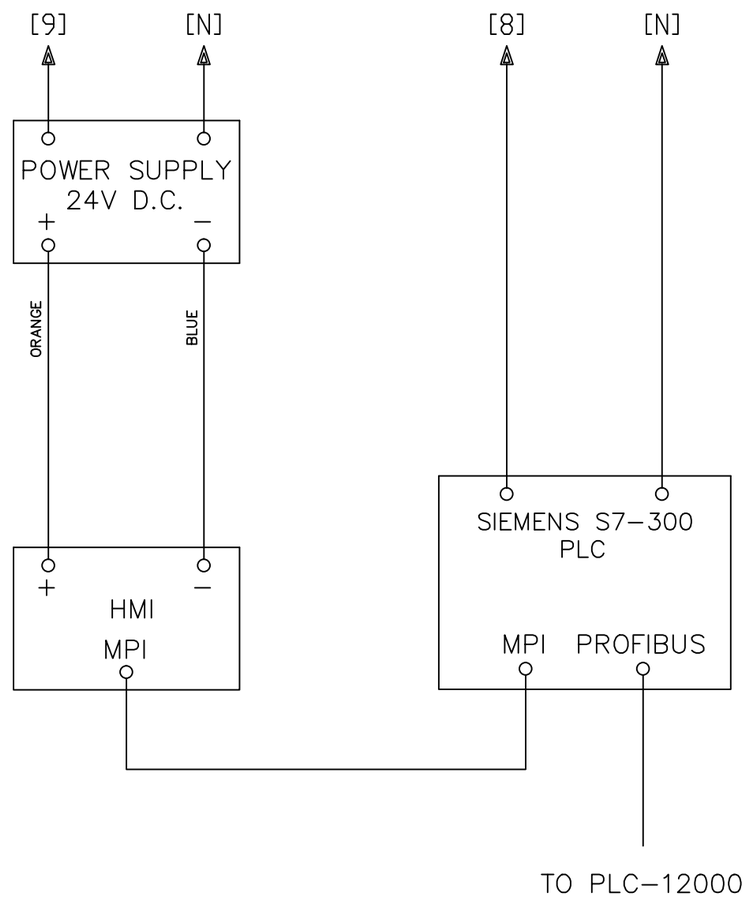

PLC TAG LIST:

I0.0	SYSTEM POWER ON
I0.1	CONTROL POWER ON
I0.2	ESTOP OK
I0.3	AGITATOR IN AUTO
I0.4	SPIRAL IN AUTO
I0.5	WASH WATER ON
I0.6	AGITATOR RUNNING
I0.7	AGITATOR JAMMED
I1.0	SPIRAL FORWARD
I1.1	SPIRAL REVERSE
I1.2	SPIRAL OVERTORQUE
I1.3	AGITATOR FAULT
I1.4	SPIRAL FAULT
I1.5	START LEVEL
I1.6	HIGH LEVEL
I1.7	COMPACTOR CALL TO RUN
I2.0	CYCLE START
I2.1	WASH CYCLE START
I2.2	ALARM RESET
I2.3	HIGH HIGH LEVEL
I2.4	HIGH HIGH SPEED STORM EVENT
I2.5	SPARE
I2.6	SPARE
I2.7	SPARE
Q0.0	AGITATOR RUN
Q0.1	SPIRAL RUN
Q0.2	COMPACTOR WASH WATER
Q0.3	COMPACTOR JAMMED
Q0.4	WASHER READY
Q0.5	DRAIN VALVE OPEN
Q0.6	SPIRAL REVERSE
Q0.7	SPIRAL JAMMED

REV.	ITEM	DATE	BY
C	FIELD CHANGE	9−25−13	DGS
B	AS STARTED	11−28−12	DGS
A	AS BUILT	69−25−20121	ATC

CLIENT: WENATCHEE

ORDER No.: WT56722−04

PROPRIETARY DOCUMENT
This document, the information which it contains, and the know−how depicted are the property of Kusters Corporation and may not be used in any manner detrimental to the Corporation's interest. Reproduction in whole or in part may not be made without written permission from Kusters Corporation; and if made, shall bear or refer to this notice.

KUSTERS ZIMA CORPORATION
Spartanburg SC USA

DRN. BY	DGS	2−15−12
CH'D BY	ATC	9−25−2012
SHEET	6 OF 7	

TITLE: WASHER COMPACTOR

DWG.NO.: B784443−6

SCALE: NONE

REV.: C

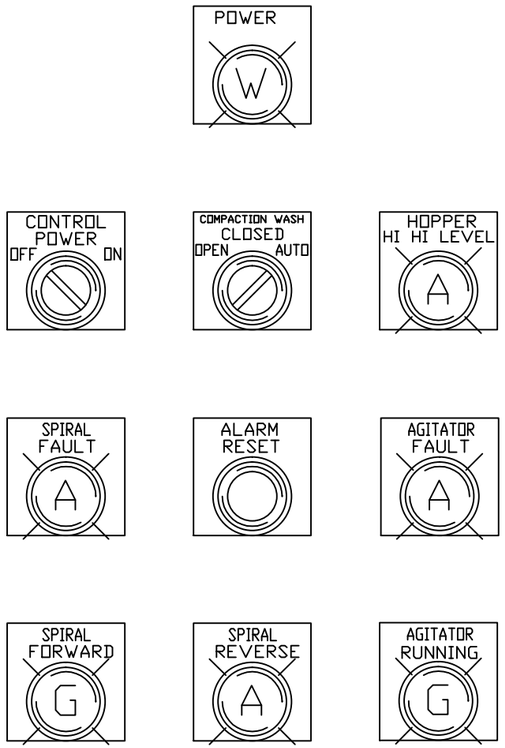

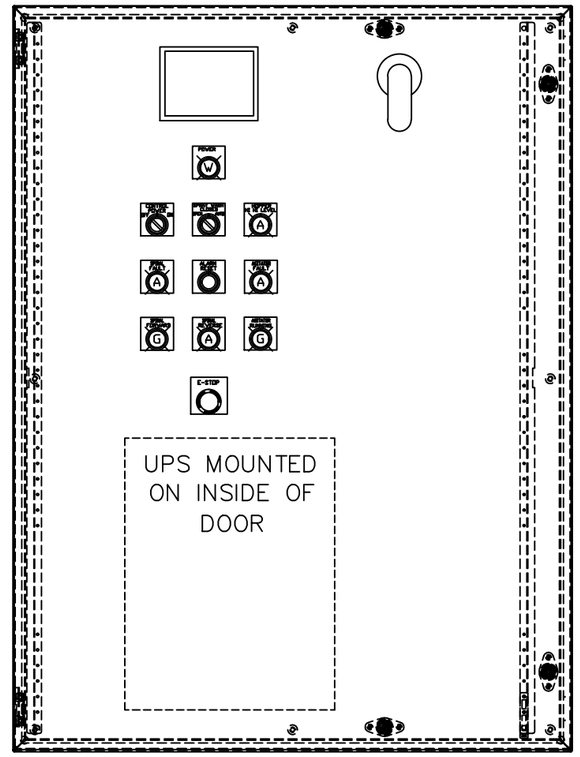

MAIN CONTROL PANEL
SIZE 48 X 36 X 12
NEMA 12

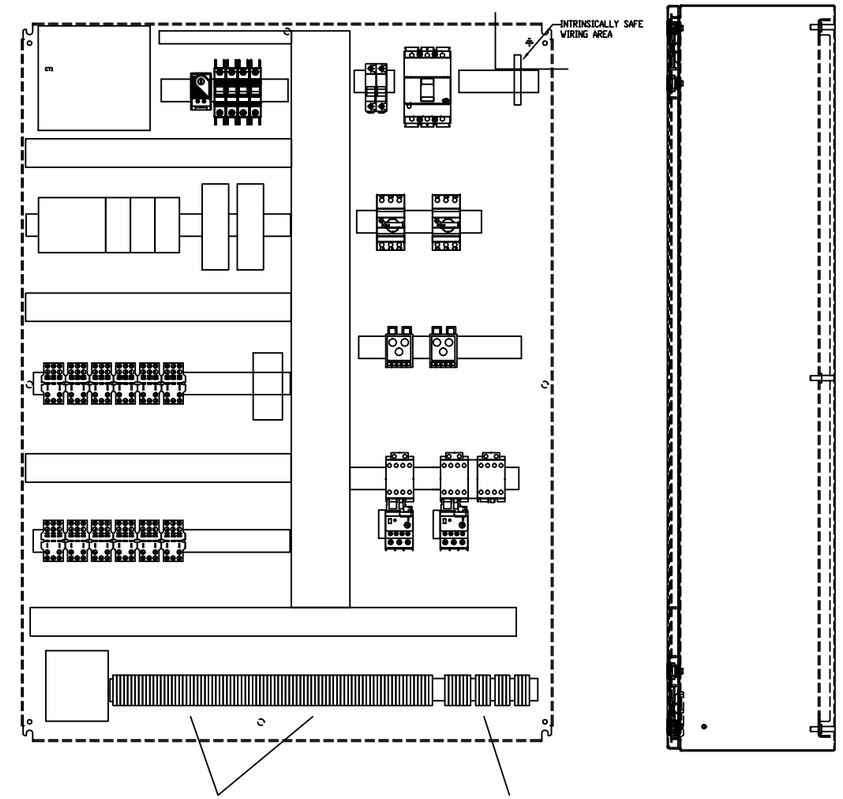

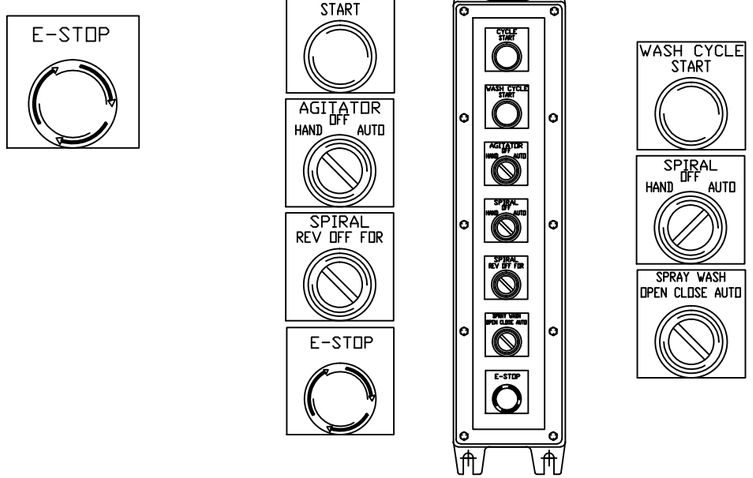

OPERATOR STATION NEMA 7

INTERNAL MARKINGS:

(SHALL BE PLACED ON THE INTRINSICALLY SAFE AREA OF THE PANEL):

WARNING: SUBSTITUTION OF COMPONENTS MAY IMPAIR INTRINSIC SAFETY.

WARNING: TO PREVENT IGNITION OF FLAMMABLE OR COMBUSTABLE ATMOSPHERES, DISCONNECT POWER BEFORE SERVICING.

(SHALL BE PLACED ADJACENT TO INTRINSICALLY SAFE FIELD WIRING TERMINALS)

INTRINSICALLY SAFE FIELD WIRING TERMINALS

WARNING: TO PREVENT IGNITION OF FLAMMABLE OR COMBUSTABLE ATMOSPHERES, DISCONNECT POWER BEFORE SERVICING.

EXTERNAL MARKINGS:

(SHALL BE PLACED ADJACENT TO INTENDED WIRING OPENINGS)

INTRINSICALLY SAFE WIRING ONLY.

PROVIDES INTRINISICALLY SAFE CIRCUIT EXTENSIONS FOR USE IN CLASS 1, DIV 1, GROUP D, HAZARDOUS LOCATIONS WHEN CONNECTED PER INSTALLATION INSTRUCTIONS.

REV.	ITEM	DATE	BY
C	FIELD CHANGE	9-25-13	DGS
B	AS STARTED	11-28-13	DGS
A	AS BUILT	9-25-2012	ATC

CLIENT: WENATCHEE

ORDER No.: WT56722-04

PROPRIETARY DOCUMENT
This document, the information which it contains, and the know-how depicted are the property of Kusters Corporation and may not be used in any manner detrimental to the Corporation's interest. Reproduction in whole or in part may not be made without written permission from Kusters Corporation; and if made, shall bear or refer to this notice.

KUSTERS ZIMA CORPORATION
Spartanburg SC USA

DRN. BY	DGS	2-15-12
CH'D BY	ATC	9-25-2012
SHEET	7 OF 7	

TITLE: WASHER COMPACTOR

DWG.NO. B784443-7 | SCALE NONE | REV. C

WASTE▪TECH
a division of KUSTERS ZIMA

3.3

BILL OF MATERIALS

2/17/2012
REV 1. 5/1/2012

WENATCHEE
FILTER SCREEN

Control Panel Bill of Material

TAG	DESCRIPTION	MANUFACTURE	CATALOG NUMBER
MCB1	Main Breaker	ABB	T1N020TL
MCCB1-MCCB2	MCCB	ABB	T1N015TL
MCP3	MCP	SPRECHER+SCHUH	KTB7-25S-1.0A
LR1	Line Reactor	TCI	KDRULA2L
LR2	Line Reactor	TCI	KDRULA1L
VFD1	Inverter	Teco	MA7200-4003-N1
VFD2	Inverter	Teco	MA7200-4002-N1
MS2-MS4	Motor Contactor	SPRECHER+SCHUH	CA7-12-10-120V
OL3	Motor Overload	SPRECHER+SCHUH	CEP7-EEBB
OL3	Motor Overload Reset	SPRECHER+SCHUH	CEP7-ERR
TFU1	Fuse Holder	Ferraz	USCC2I
TFU1	Fuse	Ferraz	ATQR4
CT1	Control Transformer	Acme	TB-81007
UPS	UPS	Tripp-Lite	SU1000RTXL2UA
CCB	Breaker	SPRECHER+SCHUH	L9-4/1/C
HCB,DCCB PLCCB,FCB	Breaker	SPRECHER+SCHUH	L9-1/1/C
UPSCB	Breaker	SPRECHER+SCHUH	L9-13/1/D
CR1-CR5	Control Relay	IDEC	RH4B-UL120VAC SH4B-05
CR6-CR11	Control Relay	IDEC	RH3B-UL120VAC SH3B-05
PL	Pilot Lamps	IDEC	APD199DN-G-120V
PL	Pilot Lamps	IDEC	APD199DN-A-120V
PL	Pilot Lamps	IDEC	APD199DN -W-120V
PB	E-Stop	IDEC	AVD311N-R
PB	Alarm Reset	IDEC	ABD111N-B
SW	POWER OFF-ON	IDEC	ASD210N

2/17/2012
REV 1. 5/1/2012

WENATCHEE
FILTER SCREEN

Control Panel Bill of Material

TAG	DESCRIPTION	MANUFACTURE	CATALOG NUMBER\
IR1	Intrinsically Safe Relay	Pepperl + Fuchs	KFA5-SR2-Ex2.W
PLC	S7-315-2DP CPU	Siemens	6ES7315-2AF03-0AB0
PLC	DI Input Module	Siemens	6ES7321-1FH00-0AA0
PLC	DO Output Module	Siemens	6ES7322-1FH00-0AA0
PLC	AI Analog Input Module	Siemens	6ES7331-7KB02-0AB0
HMI	Touch Screen	Siemens	6AV6643-0CD01-1AX5
DCPS	24VDC Power Supply	Idec	PS5R-SD24
Heater	Panel Heater	Ingram	AHC-30W
Fan	Panel Fan	Hoffman	SF1016414 W/ SG1000404
Thermostat	Thermostat	Hoffman	ADLTEMP
Inhibitor	Corrosion Inhibitor	Hoffman	AHCI10E
Enclosure	Enclosure NEMA 12	Hoffman	CSD483612 CP4836
Local Station	NEMA 7	Adalet	X5 with OPERATORS

2/17/2012
REV 1. 5/1/2012

WENATCHEE
COMPACTOR

Control Panel Bill of Material

TAG	DESCRIPTION	MANUFACTURE	CATALOG NUMBER
MD1	Main Breaker	ABB	T1N020TL
MCP1	Motor Circuit Protector	SPRECHER+SCHUH	KTB7-25H-10A
MCP2	Motor Circuit Protector	SPRECHER+SCHUH	KTB7-25H-4.0A
CM1	Shock Relay	Tsubaki	TSBSS30
CM2	Shock Relay	Tsubaki	TSBSS05
MS1 MFU2F-MFU2R	Motor Contactor	SPRECHER+SCHUH	CA7-12-10-120V
OL1	Motor Overload	SPRECHER+SCHUH	CEP7-EEDB
OL2	Motor Overload	SPRECHER+SCHUH	CEP7-EECB
OL1-OL2	Motor Overload Reset	SPRECHER+SCHUH	CEP7-ERR
TFU1	Fuse Holder	Ferraz	USCC2I
TFU1	Fuse	Ferraz	ATQR4
CT1	Control Transformer	Acme	TB-81007
UPS	UPS	Tripp-Lite	SU1000RTXL2UA
CCB	Breaker	SPRECHER+SCHUH	L9-4/1/C
HCB,DCCB PLCCB	Breaker	SPRECHER+SCHUH	L9-1/1/C
MVCB	Breaker	SPRECHER+SCHUH	L9-3/1/C
UPSCB	Breaker	SPRECHER+SCHUH	L9-13/1/D
CR1-CR11	Control Relay	IDEC	RH3B-UL120VAC SH3B-05
PL	Pilot Lamps	IDEC	APD199DN-G-120V
PL	Pilot Lamps	IDEC	APD199DN-A-120V
PL	Pilot Lamps	IDEC	APD199DN -W-120V
PB	E-Stop	IDEC	AVD311N-R
PB	Alarm Reset	IDEC	ABD111N-B
SW	POWER OFF-ON	IDEC	ASD210N

Control Panel Bill of Material

TAG	DESCRIPTION	MANUFACTURE	CATALOG NUMBER\
PLC	S7-315-2DP CPU	Siemens	6ES7315-2AF03-0AB0
PLC	DI Input Module	Siemens	6ES7321-1FH00-0AA0
PLC	DI Input Module	Siemens	6ES7321-1FF01-0AA0
PLC	DO Output Module	Siemens	6ES7322-1FH00-0AA0
PLC	AI Analog Input Module	Siemens	6ES7331-7KB02-0AB0
HMI	Touch Screen	Siemens	6AV6643-0CD01-1AX5
DCPS	24VDC Power Supply	Idec	PS5R-SD24
Heater	Panel Heater	Ingram	AHC-30W
Thermostat	Heater Thermostat	Hoffman	ATEMNC
Inhibitor	Corrosion Inhibitor	Hoffman	AHCI10E
Enclosure	Enclosure NEMA 12	Hoffman	CSD483612 CP4836
Local Station	NEMA 7	Adalet	X7 with OPERATORS

WASTE▪TECH
a division of KUSTERS ZIMA

3.4

CONTROL COMPONENT CUT SHEETS

Tmax
Molded case circuit breakers

Tmax
Molded case circuit breakers

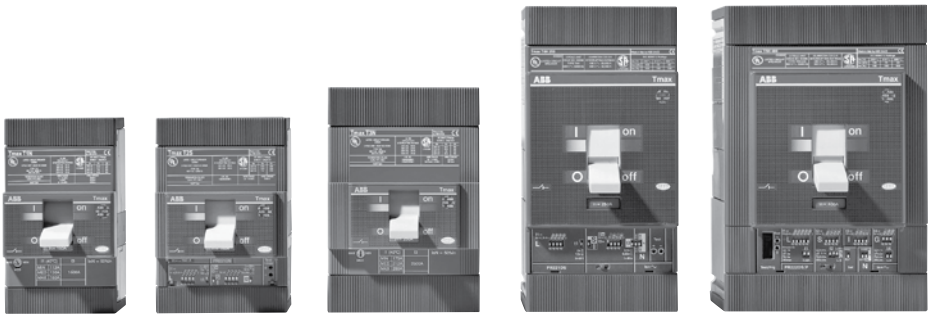

Introduction
ABB is once again demonstrating its commitment to new product development and its superiority in product technology. Never before has the industry seen such high performance, versatility and standardization in a range of molded case circuit breakers.

The ABB Tmax line of circuit breakers, with a range up to 3000A, has several key features that go along with its very small size:

- Double insulation – this construction characteristic allows for the UL Listed field installation of internal accessories without exposure to energized parts.
- Complete range of electrical and mechanical accessories
- Positive operation – breakers from ABB ensure that the toggle indicates the precise position of the moving contacts. This guarantees safe and reliable signaling by the device.
- Installation – Tmax molded case circuit breakers can be installed in panels and switchboards in either the horizontal or vertical planes while being fed from either end without any derating of their performance characteristics.
- Interrupting ratings at 480VAC up to 150kAIC.
- Compact size
- All Tmax molded case circuit breakers are UL Listed and IEC rated for global application and acceptance.
- All versions of the Tmax family are suitable for reverse feed applications.

The ABB Tmax product line has the performance and accessories to satisfy all industry requirements in the 600VAC to 600VDC ranges.

Frame sizes — Nine basic sizes
The ABB Tmax series includes nine basic frame sizes as well as the T1 single pole with the range rated from 15A to 3000A at 480VAC. The various versions carry the following interrupting capacities:

- **B** Basic breaking capacity
- **N** Normal breaking capacity
- **S** Standard breaking capacity
- **H** High breaking capacity
- **L** Extra high breaking capacity
- **V** Very high breaking capacity

Derived versions
- Thermal magnetic
- Electronic
- Molded case switches
- Motor circuit protectors (MCPs)
- Direct current (DC) rated

ABB Tmax versions
- Fixed: all models
- Drawout or plug-in: T2, T3, Ts3, T4, T5, T6, T7 & T7M
- UL File #E93565 (breakers and MCPs)
  #E116596 (Accessories)
  #E116595 (Molded case switches)

T1
100A, 600Y/347V, 480V Δ
Thermal-magnetic

Tmax MCCBs

T1

Dimensions 3P Fixed Version 5.12H x 3.00W x 2.76D

Weight 2.34 (lbs)

General
The T1 breaker family ranges from 15 through 100 amperes. The T1 trip units are non-interchangeable and use the very latest technology in electromagnetic relays for overcurrent trip protection. Thermal overload protection is provided by heat sensitive bimetals. Short circuit protection for the breaker is accomplished using a precise magnetic coil. State of the art construction in contacts and arcing chambers aid in limiting damaging fault currents through the protected circuits.

Standards
The UL489/CSA 22.2 version of T1 also carries an IEC-60947-2 rating.

Versions
The T1 frame is available in two versions:
T = Thermal-magnetic, fixed
D = Molded case switch

Performance levels
The T1 breaker has two performance levels available:
B = Basic single pole
N = Normal three pole

Number of poles
The T1 molded case circuit breaker is available in single, three and four pole versions. Estimate 4 pole pricing by adding 35% to the 3 pole price and contact your ABB sales person for details.

Molded case switches
UL489 switches include no overcurrent protection except for a high instantaneous trip mechanism for self protection.

UL489 / CSA C22.2 Interrupting capacity (kA RMS)

Voltage	Continuous rating	B (1 pole)	N
240VAC	15 – 100A	—	50 ①
347VAC	15A 20 – 100A	10 14	— —
480VAC Δ	15A ② 20 – 100A	— —	14 22
600Y/347VAC	15 – 100A	—	10
250VDC 2 pole series	15 – 100A	—	25
500VDC 3 pole series	15 – 100A	—	25

IEC 60947-2 Interrupting capacity (kA RMS)

Voltage	Continuous rating	B (1 pole)	N
230VAC	15 – 100A	25 ③	50
415VAC	15 – 100A	—	36
690VAC	15 – 100A	—	6
500VDC 2 pole series	15 – 100A	—	36

16

① In 15A 35kA @ 240VAC.
② 15A available in 480/277 VAC only.
③ Interrupting capacity for 16-20A is 16kA

T1
100A, 600Y/347V, 480V Δ
Thermal-magnetic/Molded Case Switch

T1B TMF — Single pole thermal magnetic fixed ①

Breaker	IC at 277VAC	Rating	Magnetic trip	1 pole, 277VAC catalog number	List price
T1B	10kA	15A	1000A	T1B015TL-1	$ 230
	18kA	20A	1000A	T1B020TL-1	
		25A	1000A	T1B025TL-1	
		30A	1000A	T1B030TL-1	
		40A	1000A	T1B040TL-1	
		50A	1500A	T1B050TL-1	
		60A	1500A	T1B060TL-1	
		70A	1500A	T1B070TL-1	262
		80A	1500A	T1B080TL-1	
		90A	1500A	T1B090TL-1	
		100A	1500A	T1B100TL-1	

T1N TMF — 3 pole thermal magnetic fixed

Breaker	IC at 480VAC	Rating	Magnetic trip	3 pole, 600Y/347VAC/500VDC catalog number	List price
T1N	14kA	15A	1000A	T1N015TL ②	$ 402
	22kA	20A	1000A	T1N020TL	
		25A	1000A	T1N025TL	
		30A	1000A	T1N030TL	
		40A	1000A	T1N040TL	
		50A	1500A	T1N050TL	
		60A	1500A	T1N060TL	
		70A	1500A	T1N070TL	479
		80A	1500A	T1N080TL	
		90A	1500A	T1N090TL	
		100A	1500A	T1N100TL	

T1N TMF — 100% Rated thermal-magnetic

Breaker	IC at 480VAC	Rating	Magnetic trip	3 pole 600Y/347 500VDC catalog number	List price
T1N	14kA	15 ①	1000A	T1NQ015TL	$ 442
	22kA	20	1000A	T1NQ020TL	
		25	1000A	T1NQ025TL	
		30	1000A	T1NQ030TL	
		40	1000A	T1NQ040TL	
		50	1500A	T1NQ050TL	
		60	1500A	T1NQ060TL	
		70	1500A	T1NQ070TL	527
		80	1500A	T1NQ080TL	
		90	1500A	T1NQ090TL	
		100	1500A	T1NQ100TL	

T1N-D — Molded case switch

Breaker	Interrupting capacity ③	Rating	Magnetic trip	480VAC/500VDC catalog number	List price
T1-D	240V, 50kA	100A	1000A	T1N100DL	$ 431

① Electrical/mechanical accessories cannot be installed on single pole breakers.
② Rated 480V/277 VAC for 15A.
③ When protected by a OCPD with appropriate ratings.

Series KT7 Motor Circuit Controllers

Versatile, convenient and space saving… for a variety of applications

Sprecher+Schuh's KT7 series of Motor Circuit Controllers are some of the most versatile and technologically advanced control products available today.

In one small package, KT7s combine the functions of:

- Current limiting short circuit protection
- Class 10 thermal overload protection
- Switching and
- Signaling

These devices can be used in a variety of control schemes that reduce panel space, simplify installation and eliminate the need for more expensive equipment.

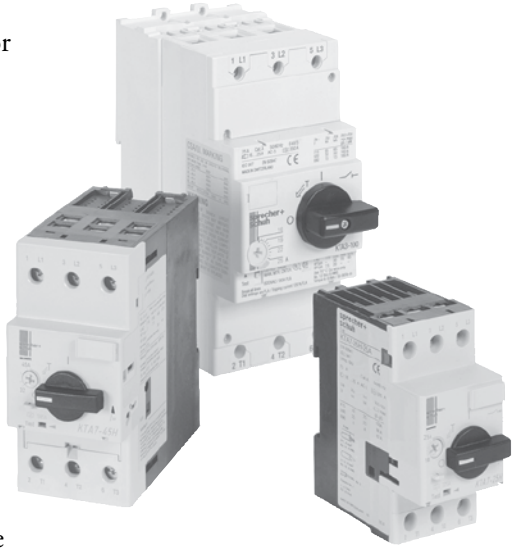

Increased ratings…

Sprecher+Schuh's KT7 controller family offers higher interrupting capacities (KAIC ratings) and improved Type 2 Coordination and Type E (life after short-circuit). The KTA7-25H/32H offers the option of higher short-circuit current ratings (SCCR) than the standard interrupting capacity of the KTA7-25S/32S Motor Controllers. KTA7 is also available in frames up to 45A. KTC7 can be used with High Efficiency motors. KTB7 Magnetic Only controllers can be combined with CA7 contactors and CEP7 overloads to provide additional features.

Designed for multiple applications

UL rules allow KT7 Motor Circuit Controllers to be used in a wide variety of applications including:

- Manual Starter Applications
- Traditional Group Motor Applications with compliance to the new Tap Conductor Ratings
- Motor Disconnect Applications
- Self-Protected Manual Combination Starter Applications (Type E)
- Individual Combination Starter Applications (Type E/F)
- Multi-motor Starter Combination Applications (Type E/F)

See page F119 for
Methods of Applying KT7 Motor Circuit Controllers

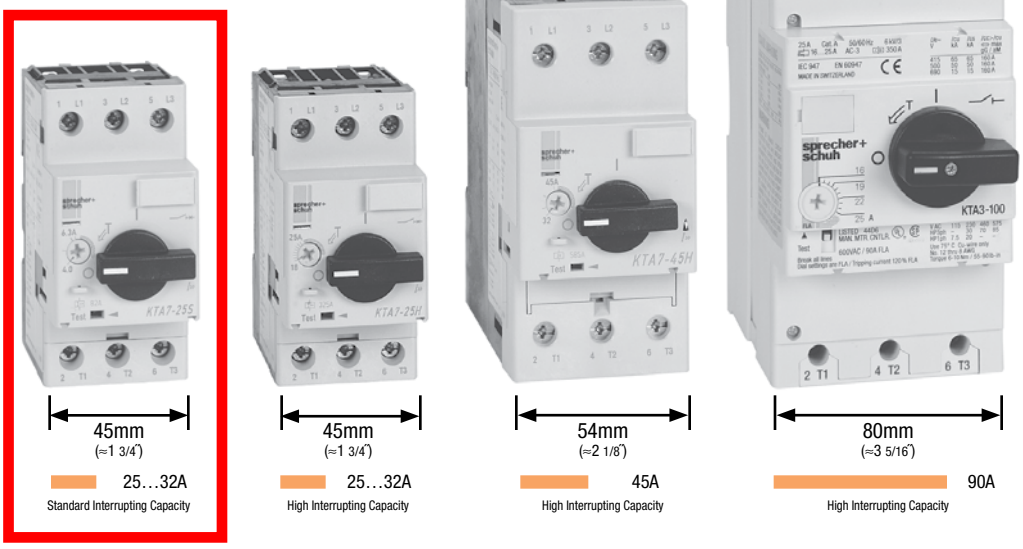

KTB7 Base Unit ❷

Maximum Horsepower						❶ Rated Operational Current [A]	Magnetic Release Response Current [A]	Catalog Number	Price
Typical Single Phase		Typical Three Phase [HP]							
115V	230V	200V	230V	460V	575V				
KTB7-25S — Standard Interrupting Capacity									
~	~	~	~	~	~	0.40	8.2	**KTB7-25S-0.4A**	**218**
~	~	~	~	~	1/2	1.0	21	**KTB7-25S-1.0A**	**249**
1/10	1/6	1/2	1/2	1	1-1/2	2.5	52	**KTB7-25S-2.5A**	**249**
KTB7-25…32H — High Interrupting Capacity									
1/10	1/6	1/2	1/2	1	1-1/2	2.5	33	**KTB7-25H-2.5A**	**312**
1/8	1/3	3/4	3/4	2	3	4	52	**KTB7-25H-4.0A**	**312**
1/2	1-1/2	2	3	5	7-1/2	10	130	**KTB7-25H-10A**	**312**
1	2	3	5	10	10	16	208	**KTB7-25H-16A**	**355**
2	3	7-1/2	7-1/2	15	20	25	325	**KTB7-25H-25A**	**355**
2	5	7-1/2	10	25	30	32	448	**KTB7-32H-32A**	**474**
KTB7-45H — High Interrupting Capacity									
2	5	7-1/2	7-1/2	15	20	25	325	**KTB7-45H-25A**	**510**
2	5	7-1/2	10	20	30	32	416	**KTB7-45H-32A**	**573**
3	7-1/2	10	15	30	40	45	585	**KTB7-45H-45A**	**573**

KTB7-25S

Description

The KTB7 is designed without a thermal trip element (i.e., current adjustment range). It should be selected for applications where a separate motor overload protection device is used. Magnetic trip is the same as the KTA7 (approximately 13x operational current).

❶ APPLICATION NOTE: Product Selection for Heavy Duty Starting Applications using KTB7-25S, KTB7-25H/32H and KTB7-45H Motor Circuit Controllers

The KTB7 Motor Circuit Controller is designed and tested to protect a motor circuit in case of a short circuit. A separate Sprecher + Schuh CEP7-EE_ overload relay with selectable trip class should be used to protect the motor against overload.

In Applications with motor starting times exceeding 10 seconds (heavy duty starting) the rated operational current (I_e) of the motor FLA must be multiplied by the following factors for selection of the KTB7 Motor Circuit Controller KTB7-25S, KTB7-25H/32H and KTB7-45H.

Trip classes according to UL 508 Section 52 and IEC 60947-4-1
CLASS 10 = 1.00 CLASS 15 = 1.22 CLASS 20 = 1.42
CLASS 25 = 1.58 CLASS 30 = 1.73
The maximum number of motor starts in 25 cycles/hour with a minimum OFF-time of 120 seconds between cycles. This additional calculation and selecting a larger frame size is necessary to compensate (dissipate) the increased heat resulting from long acceleration applications effecting the rated operational current of the KTB7.

Application Example:
Motor 480 VAC, 10 HP, I_e 14 FLA
Heavy duty starting application with start time of up to 18 seconds

Solution:
Starting time up to 18 seconds requires dimensioning for CLASS 20.
- Selection of the Motor Circuit Controller for Short Circuit Protection: Multiply the rated operational current I_e with factor for CLASS 20: $I_e(20)$ = 14 A x 1.42 = 19.9 A
- Select corresponding Sprecher + Schuh KTB7-25S, KTB7-25H/32H or KTB7-45H from catalog using next higher current rating: KTB7-25H-25A

❷ Horsepower ratings shown in the table are for reference only. The final selection of the manual starter depends on the actual motor full load current and service factor.
- For motor with service factor less than 1.15. Use motor nameplate full load current times 0.9 and choose the motor starter with the appropriate current range. Example: Motor F.L.C. = 4.2A; S.F. = 1.0. – (4.2A x 0.9 = 3.78A). Select Catalog Number KTA7-25S-4.0A.

KTB7 UL Ratings Application Chart

Device	Manual Motor Starter		Manual Controller for Group Installation ❶			Manual Controller as Motor Disconnect ❷	
	Max. Short Circuit Current [kA]		Max. Fuse or Circuit Breaker	Max. Short Circuit Current [kA]		Max. Short Circuit Current [kA]	
	480V	600V		480V	600V	480V	600V
KTA7-25S — Standard Interrupting Capacity							
KTB7-25S-0.4A	65	47	450	65	47	65	47
KTB7-25S-1.0A	65	47	450	65	47	65	47
KTB7-25S-2.5A	65	30	450	65	30	65	30
KTA7-25…32H — High Interrupting Capacity							
KTB7-25H-2.5A	65	30	450	65	30	65	30
KTB7-25H-4.0A	65	30	450	65	30	65	30
KTB7-25H-10A	65	30	450	65	30	65	30
KTB7-25H-16A	65	30	450	65	30	65	30
KTB7-25H-25A	30	30	450	30	30	30	30
KTB7-32H-32A	30	30	450	30	30	30	18
KTA7-45H — High Interrupting Capacity							
KTB7-45H-25A	65	30	600	65	30	65	30
KTB7-45H-32A	65	30	600	65	30	65	30
KTB7-45H-45A	65	18	600	65	18	65	18

❶ UL 508, CSA 22.2 No. 14 for group installation, in connection with short-circuit protection device.
❷ UL 508 Part III.

TCI

KDR™ Optimized Drive Reactors

Performance and Protection For Drives

Proudly Made in the USA

CE c UL us

c UL us NOW AVAILABLE

480 VOLTS LOW-Z

OPEN UL PART NUMBER	NEC MOTOR HP	OPEN UL WEIGHT	UL TYPE 1 Enclosed Part Number	DIMENSIONS HEIGHT x WIDTH x DEPTH	UL TYPE 1 WEIGHT	UL TYPE 3R Enclosed Part Number	DIMENSIONS HEIGHT x WIDTH x DEPTH	UL TYPE 3R WEIGHT
KDRULA6L	0.5	4	KDRULA6LE01	12.25 X 12.50 X 6.75	14.50	KDRULA6LE3R	11.50 X 10.00 X 12.00	19
KDRULA7L	0.75	4	KDRULA7LE01	12.25 X 12.50 X 6.75	14.50	KDRULA7LE3R	11.50 X 10.00 X 12.00	19
KDRULA8L	1	4	KDRULA8LE01	12.25 X 12.50 X 6.75	14.50	KDRULA8LE3R	11.50 X 10.00 X 12.00	19
KDRULA9L	1.5	4	KDRULA9LE01	12.25 X 12.50 X 6.75	14.50	KDRULA9LE3R	11.50 X 10.00 X 12.00	19
KDRULA1L	2	4	KDRULA1LE01	12.25 X 12.50 X 6.75	14.50	KDRULA1LE3R	11.50 X 10.00 X 12.00	19
KDRULA2L	3	4	KDRULA2LE01	12.25 X 12.50 X 6.75	14.50	KDRULA2LE3R	11.50 X 10.00 X 12.00	19
KDRULA3L	5	4	KDRULA3LE01	12.25 X 12.50 X 6.75	14.50	KDRULA3LE3R	11.50 X 10.00 X 12.00	19
KDRULA4L	7.5	4	KDRULA4LE01	12.25 X 12.50 X 6.75	14.50	KDRULA4LE3R	11.50 X 10.00 X 12.00	19
KDRULA5L	10	5	KDRULA5LE01	12.25 X 12.50 X 6.75	14.50	KDRULA5LE3R	11.50 X 10.00 X 12.00	19
KDRULB2L	15	8	KDRULB2LE01	12.25 X 12.50 X 6.75	18.50	KDRULB2LE3R	11.50 X 10.00 X 12.00	23
KDRULB1L	20	8	KDRULB1LE01	12.25 X 12.50 X 6.75	18.50	KDRULB1LE3R	11.50 X 10.00 X 12.00	23
KDRULD1L	25	10	KDRULD1LE01	12.25 X 12.50 X 6.75	20.50	KDRULD1LE3R	11.50 X 10.00 X 12.00	25
KDRULD2L	30	10	KDRULD2LE01	12.25 X 12.50 X 6.75	20.50	KDRULD2LE3R	11.50 X 10.00 X 12.00	25
KDRULC1L	40	15	KDRULC1LE01	12.25 X 12.50 X 6.75	25.50	KDRULC1LE3R	11.50 X 10.00 X 12.00	30
KDRULF2L	50	25	KDRULF2LE01	19.13 X 15.43 X 15.43	67	KDRULF2LE3R	19.18 X 15.62 X 19.50	63
KDRULF4L	60	25	KDRULF4LE01	19.13 X 15.43 X 15.43	67	KDRULF4LE3R	19.18 X 15.62 X 19.50	63
KDRULF3L	75	33	KDRULF3LE01	19.13 X 15.43 X 15.43	67	KDRULF3LE3R	19.18 X 15.62 X 19.50	67
KDRULH3L	100	46	KDRULH3LE01	19.13 X 15.43 X 15.43	78	KDRULH3LE3R	19.18 X 15.62 X 19.50	78
KDRULH2L	125	46	KDRULH2LE01	19.13 X 15.43 X 15.43	78	KDRULH2LE3R	19.18 X 15.62 X 19.50	78
KDRULH1L	150	46	KDRULH1LE01	22.12 X 20.43 X 24.37	108	KDRULH1LE3R	22.15 X 20.62 X 28.50	116
KDRULG3L	200	74	KDRULG3LE01	22.12 X 20.43 X 24.37	131	KDRULG3LE3R	22.15 X 20.62 X 28.50	144
KDRULG1L	250	74	KDRULG1LE01	22.12 X 20.43 X 24.37	132	KDRULG1LE3R	22.15 X 20.62 X 28.50	145
KDRULG2L	300	74	KDRULG2LE01	22.12 X 20.43 X 24.37	132	KDRULG2LE3R	22.15 X 20.62 X 28.50	145
KDRULJ2L	350	80	KDRULJ2LE01	22.12 X 20.43 X 24.37	150	KDRULJ2LE3R	22.15 X 20.62 X 28.50	150
KDRULJ1L	400	80	KDRULJ1LE01	22.12 X 20.43 X 24.37	150	KDRULJ1LE3R	22.15 X 20.62 X 28.50	150
KDRULL1L	450	120	KDRULL1LE01	22.12 X 20.43 X 24.37	190	KDRULL1LE3R	22.15 X 20.62 X 28.50	190
KDRULL2L	500	120	KDRULL2LE01	22.12 X 20.43 X 24.37	190	KDRULL2LE3R	22.15 X 20.62 X 28.50	190
KDRULL3L	600	164	KDRULL3LE01	48.00 X 36.27 X 36.27	475			
KDRULS1L	700	180	KDRULS1LE01	48.00 X 36.27 X 36.27	490			
KDRULX2L	800	290	KDRULX2LE01	48.00 X 36.27 X 36.27	610			
KDRULX3L	900	305	KDRULX3LE01	48.00 X 36.27 X 36.27	615			
KDRULX1L	1000	317	KDRULX1LE01	48.00 X 36.27 X 36.27	630			
KDRULY1L	1100	502	KDRULY1LE01	48.00 X 36.27 X 36.27	900			
KDRULY2L	1250	524	KDRULY2LE01	48.00 X 36.27 X 36.27	925			

480 VOLTS HIGH-Z

OPEN UL PART NUMBER	NEC MOTOR HP	OPEN UL WEIGHT	UL TYPE 1 Enclosed Part Number	DIMENSIONS HEIGHT x WIDTH x DEPTH	UL TYPE 1 WEIGHT	UL TYPE 3R Enclosed Part Number	DIMENSIONS HEIGHT x WIDTH x DEPTH	UL TYPE 3R WEIGHT
KDRULA6H	0.5	4	KDRULA6HE01	12.25 X 12.50 X 6.75	13.50	KDRULA6HE3R	11.50 X 10.00 X 12.00	19
KDRULA7H	0.75	4	KDRULA7HE01	12.25 X 12.50 X 6.75	14.50	KDRULA7HE3R	11.50 X 10.00 X 12.00	19
KDRULA8H	1	4	KDRULA8HE01	12.25 X 12.50 X 6.75	14.50	KDRULA8HE3R	11.50 X 10.00 X 12.00	19
KDRULA9H	1.5	4	KDRULA9HE01	12.25 X 12.50 X 6.75	14.50	KDRULA9HE3R	11.50 X 10.00 X 12.00	19
KDRULA1H	2	4	KDRULA1HE01	12.25 X 12.50 X 6.75	14.50	KDRULA1HE3R	11.50 X 10.00 X 12.00	19
KDRULA2H	3	4	KDRULA2HE01	12.25 X 12.50 X 6.75	14.50	KDRULA2HE3R	11.50 X 10.00 X 12.00	19
KDRULA3H	5	4	KDRULA3HE01	12.25 X 12.50 X 6.75	14.50	KDRULA3HE3R	11.50 X 10.00 X 12.00	19
KDRULA4H	7.5	5	KDRULA4HE01	12.25 X 12.50 X 6.75	15.50	KDRULA4HE3R	11.50 X 10.00 X 12.00	20
KDRULA5H	10	5	KDRULA5HE01	12.25 X 12.50 X 6.75	15.50	KDRULA5HE3R	11.50 X 10.00 X 12.00	20
KDRULB2H	15	7	KDRULB2HE01	12.25 X 12.50 X 6.75	17.50	KDRULB2HE3R	11.50 X 10.00 X 12.00	22
KDRULC3H	20	15	KDRULC3HE01	12.25 X 12.50 X 6.75	25.50	KDRULC3HE3R	11.50 X 10.00 X 12.00	30
KDRULC1H	25	15	KDRULC1HE01	12.25 X 12.50 X 6.75	25.50	KDRULC1HE3R	11.50 X 10.00 X 12.00	30
KDRULE2H	30	16	KDRULE2HE01	12.25 X 12.50 X 6.75	26.50	KDRULE2HE3R	11.50 X 10.00 X 12.00	31
KDRULF4H	40	25	KDRULF4HE01	19.13 X 15.43 X 15.43	67	KDRULF4HE3R	19.18 X 15.62 X 19.50	63
KDRULF1H	50	25	KDRULF1HE01	19.13 X 15.43 X 15.43	67	KDRULF1HE3R	19.18 X 15.62 X 19.50	63
KDRULF2H	60	25	KDRULF2HE01	19.13 X 15.43 X 15.43	67	KDRULF2HE3R	19.18 X 15.62 X 19.50	63
KDRULH2H	75	52	KDRULH2HE01	19.13 X 15.43 X 15.43	82	KDRULH2HE3R	19.18 X 15.62 X 19.50	82
KDRULH1H	100	52	KDRULH1HE01	19.13 X 15.43 X 15.43	82	KDRULH1HE3R	19.18 X 15.62 X 19.50	82
KDRULG3H	125	57	KDRULG3HE01	22.12 X 20.43 X 24.37	122	KDRULG3HE3R	22.15 X 20.62 X 28.50	127
KDRULG1H	150	60	KDRULG1HE01	22.12 X 20.43 X 24.37	127	KDRULG1HE3R	22.15 X 20.62 X 28.50	127
KDRULJ1H	200	75	KDRULJ1HE01	22.12 X 20.43 X 24.37	136	KDRULJ1HE3R	22.15 X 20.62 X 28.50	145
KDRULL1H	250	105	KDRULL1HE01	22.12 X 20.43 X 24.37	162	KDRULL1HE3R	22.12 X 20.43 X 24.37	175
KDRULL2H	300	105	KDRULL2HE01	22.12 X 20.43 X 24.37	162	KDRULL2HE3R	22.12 X 20.43 X 24.37	175
KDRULL3H	350	109	KDRULL3HE01	22.12 X 20.43 X 24.37	166	KDRULL3HE3R	22.15 X 20.62 X 28.50	180
KDRULL4H	400	135	KDRULL4HE01	22.12 X 20.43 X 24.37	176	KDRULL4HE3R	22.15 X 20.62 X 28.50	205
KDRULL5H	450	135	KDRULL5HE01	36.00 X 28.39 X 30.19	295	KDRULL5HE3R	36.00 X 28.39 X 36.86	305
KDRULL6H	500	135	KDRULL6HE01	36.00 X 28.39 X 30.19	295	KDRULL6HE3R	36.00 X 28.39 X 36.86	305
KDRULS1H	600	272	KDRULS1HE01	48.00 X 36.27 X 36.27	685			
KDRULL7H	700	295	KDRULL7HE01	48.00 X 36.27 X 36.27	705			
KDRULX2H	800	305	KDRULX2HE01	48.00 X 36.27 X 36.27	715			
KDRULX3H	900	308	KDRULX3HE01	48.00 X 36.27 X 36.27	715			
KDRULX4H	1000	317	KDRULX4HE01	48.00 X 36.27 X 36.27	725			
KDRULY2H	1100	550	KDRULY2HE01	48.00 X 36.27 X 36.27	950			
KDRULY1H	1250	695	KDRULY1HE01	48.00 X 36.27 X 36.27	1000			

MA7200

Sensorless Vector AC Inverter

TECO Westinghouse

ANAB ACCREDITED

SYSTEM CERTIFICATION ISO 9001:2000 SGS

Features and Benefits

- **Sensorless Vector –** The MA7200 has precise speed and torque control for the most demanding system performance and simple set-up through an auto-tuning function. It can be operated in sensorless vector or V/Hz mode to match the user's specific application.
- **Graphical LCD Operator -** The MA7200 offers easily read parameters and status in plain English text on a 2 line by 20 character lighted LCD, eliminating the need to memorize parameters - the user can set up the drive without an instruction manual! Straight forward monitoring of drive status through the operator is also available, which simplifies set-up and troubleshooting.
- **Parameter Copy -** No extra hardware is required on this drive. The copy feature is included as standard in the keypad. Simple cloning of the drive program is available, making it perfect for the OEM.
- **Flexible Input/Output Options -** The MA7200 offers Sink or Source Selectable Digital Inputs - 4 Preset, 4 User Programmable, 16 Preset Speeds, 2 Analog Inputs, 2 Analog Outputs, 3 Multi-Function Output Contacts - 1 Form C Relay, 1 Form A Relay, and 1 Open Collector Output.
- **Built-in PID Control -** The MA7200 has scalable PID feedback for accurate system regulation.
- **Powerful Programming Options -** The MA7200 allows the user to set up basic parameters for simple tasks or take advantage of advanced features for demanding applications.
- **Simple PLC -** The MA7200 can set custom run patterns for multiple machine cycles.
- **Communications -** The MA7200 has Modbus RTU as a standard. The user can control, program and monitor the drive(s) over an Industrial Network. Other protocols are also available.
- **PG Interface Built-in -** The MA7200 has Speed Control Accuracy of 0.1% .
- **User Selectable V/F Curves + S Curve area available.**
- **Motor/Drive Systems -** Pair the MA7200 with a TECO-Westinghouse motor for single source reliability.

Aggregate / Conveyor Application

Oil Pump Application

Digital Operator

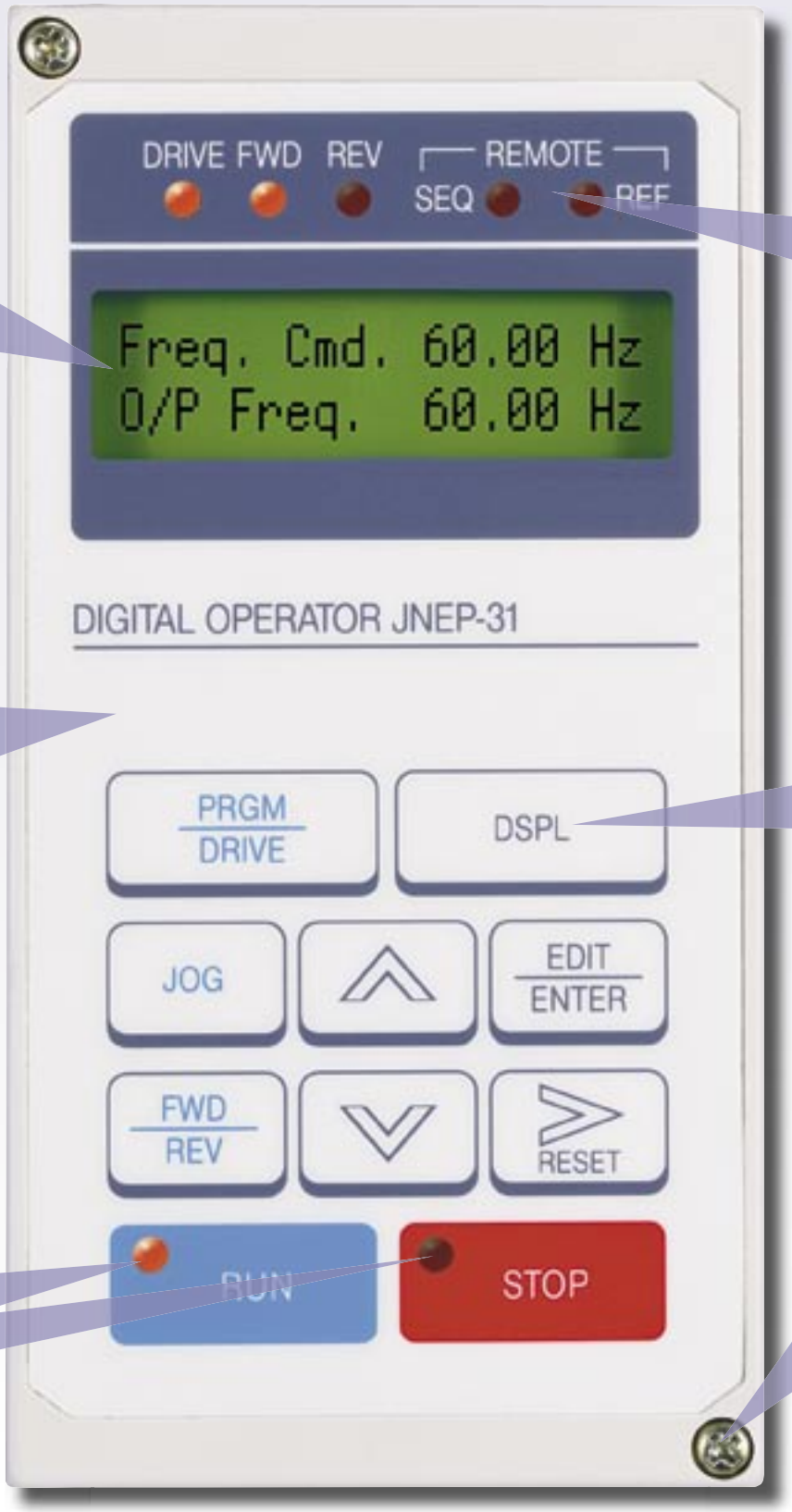

Easy to read 20 x 2 line display

LED'S indicate mode sequence

Dual function keypad and parameter copy unit

Extra large keys for entering and editing drive parameters

LED pilot lighted drive start and stop function

Removable for remote mounting

Specifications

Output Characteristics	MA7200 NEMA 1	208 - 230V 1 - 40 HP Constant Torque 380 - 460V 1 - 75 HP Constant Torque
	Maximum Voltage	230 Volt 3-Phase, 208 - 230V 460 Volt 3-Phase, 380 - 460V
	Rated Output Frequency	0 - 400Hz
	Output Frequency Resolution	0.01Hz
Power Supply	Rated Input Voltage & Frequency	230 Volt 1 - 3 HP 1/3-Phase, 208 - 230V, 50/60Hz 5 - 40 HP 3-Phase, 208 - 230V, 50/60Hz 460 Volt 1 - 75 HP 3-Phase, 380 - 460V, 50/60Hz
	Voltage Fluctuation	10%, -15%
	Frequency Fluctuation	+/-5%
Control Characteristics	Control Mode	Selectable Sensorless Vector, V/Hz, V/Hz with PG Feedback
	Operation Mode	English LCD Display
	Carrier Frequency	Programmable: 2.5 - 15kHz
	Frequency Control Range	0.5 - 400Hz
	Frequency Accuracy	Digital Command: +/-0.01% (+14°F - 104°F) Analog Command: +/-1% (77°F+/-14°F)
	Speed Control Accuracy	+/-0.5% (Sensorless Vector) +/-0.1% (V/Hz with PG Feedback)
	Frequency Command Resolution	Digital Command: 0.01Hz Analog Command: 0.06/60Hz
	Overload Capacity	Constant Torque: 150% Rated Output Current for 60 Sec. Variable Torque: 110% Rated Output Current for 60 Sec.
	Frequency Setting Signal	0 - 10VDC, 4 - 20mA
	Accel/Decel Time	0.0 - 6000 Sec. (Independent Accel/Decel Time Settings)
	Number of V/F Patterns	15 Preset V/F Patterns, 1 Custom V/F Pattern
	Braking Torque	Approximately 20%
Protective Functions	Stall Prevention	Stall Prevention at Acceleration/Deceleration and Constant Speed Operation
	Instantaneous Overcurrent	200% of Rated Output Current
	Motor Overload Protection	Electronic Overload Protection
	Overvoltage (230V Series)	Motor Coasts to a Stop if Inverter Bus Voltage exceeds 410VDC
	Overvoltage (460V Series)	Motor Coasts to a Stop if Inverter Bus Voltage exceeds 820VDC
	Undervoltage (230V Series)	Motor Coasts to a Stop if Inverter Bus Voltage drops to 200VDC or below
	Undervoltage (460V Series)	Motor Coasts to a Stop if Inverter Bus Voltage drops to 400VDC or below
	Momentary Power Loss	Motor Coasts to a Stop after Momentary Power Loss lasting over 15ms
	Overheat Protection	Protected by Thermistor
	Ground Fault	Protected by DC Current Sensor
	Power Charge Indication (LED)	Charge Lamp stays ON until Bus Voltage drops below 50VDC

Specifications

Control Connections	Control Power	24VDC
	Speed Reference Supply	12VDC, 20mA
	Analog Input	0 - 10VDC, Input Impedance 20k Ohms 4 - 20mA, Input Impedance 250 Ohms External Speed Potentiometer, 0 - 10VDC, 2k Ohms Minimum, .5 Watt
	Auxiliary Analog Input	1 Programmable, 0 - 10VDC, Input Impedance 20k Ohms
	Analog Outputs	2 Programmable, 0 - 10VDC
	Digital Inputs	8 Digital Inputs (4 Programmable): Positive or Negative Control Logic
	Digital Outputs	2 Programmable Form C Relays, 250VAC, 1 Amp or 30VDC, 1 Amp Programmable Open Collector, 48VDC, 50mA
	Serial Communications	RS-485 Port, MODBUS Protocol
Environmental Conditions	Location	Indoor (Protected from Dust and Corrosive Gases)
	Ambient Temperature	+14 to 104°F (Not Frozen)
	Storage Temperature	-4 to 140°F
	Humidity	<90% RH (Non-Condensing)
	Vibration	<1000m, 5.9m/s2 (0.6G)
Certifications/ Compliance	UL, cUL, CE EN50081-2 (Requires external EMI/RFI Filter) EN50082-2	

A Complete Line of Accessories for the MA700.

Noise filter, AC Reactor, PROFIBUS Board, Breaking Resistor, Analog Operator, Keypad Extension Cable.

Dimensions

230V 1/3-Phase

MODEL NO.	HP CONSTANT TORQUE	DRIVE AMPS CONSTANT TORQUE	DIMENSIONS (Inches)			APPROX. WT. (lbs.)
			HEIGHT	WIDTH	DEPTH	
MA7200-2001-N1	1	4.8	8.54	5.20	5.65	6
MA7200-2002-N1	2	6.4	8.54	5.20	5.65	6
MA7200-2003-N1	3	9.6	11.00	5.51	6.95	9

230V 3-Phase

MODEL NO.	HP CONSTANT TORQUE	DRIVE AMPS CONSTANT TORQUE	DIMENSIONS (Inches)			APPROX. WT. (lbs.)
			HEIGHT	WIDTH	DEPTH	
MA7200-2005-N1	5	17.5	11.00	5.51	6.95	9
MA7200-2007-N1	7.5	24	11.81	8.32	8.46	13
MA7200-2010-N1	10	32	11.81	8.32	8.46	13
MA7200-2015-N1	15	48	14.17	10.43	8.86	27
MA7200-2020-N1	20	64	14.17	10.43	8.86	27
MA7200-2025-N1	25	80	14.17	10.43	8.86	29
MA7200-2030-N1	30	96	25.45	10.60	10.91	67
MA7200-2040-N1	40	130	25.45	10.60	10.91	67

460V 3-Phase

MODEL NO.	HP CONSTANT TORQUE	DRIVE AMPS CONSTANT TORQUE	DIMENSIONS (Inches)			APPROX. WT. (lbs.)
			HEIGHT	WIDTH	DEPTH	
MA7200-4001-N1	1	2.6	8.54	5.20	5.65	6
MA7200-4002-N1	2	4	8.54	5.20	5.65	6
MA7200-4003-N1	3	4.8	11.00	5.51	6.95	9
MA7200-4005-N1	5	8.7	11.00	5.51	6.95	9
MA7200-4007-N1	7.5	12	11.81	8.32	8.46	13
MA7200-4010-N1	10	15	11.81	8.32	8.46	13
MA7200-4015-N1	15	24	14.17	8.32	8.86	27
MA7200-4020-N1	20	32	14.17	10.43	8.86	27
MA7200-4025-N1	25	40	14.17	10.43	8.86	29
MA7200-4030-N1	30	48	14.17	10.43	8.86	29
MA7200-4040-N1	40	64	25.45	10.60	10.91	67
MA7200-4050-N1	50	80	25.45	10.60	10.91	67
MA7200-4060-N1	60	96	29.39	12.13	11.11	102
MA7200-4075-N1	75	128	29.39	12.13	11.11	102

Non-Reversing, Three Pole NEMA Labeled Contactors with AC Coil ❶❸

NEMA Size	Maximum Horsepower 1Ø 115V	1Ø 230V	3Ø 200V	3Ø 230V	3Ø 460V	3Ø 575V	Standard Auxiliary Contacts NO	NC	Catalog Number	Price
00	1/3	1	1-1/2	1-1/2	2	2	1	0	CAN7-12-10-✱	155
0	1	2	3	3	5	5	1	0	CAN7-16-10-✱	174
1	2	3	7-1/2	7-1/2	10	10	1	0	CAN7-37-10-✱	288
2	3	7-1/2	10	15	25	25	1	0	CAN7-43-10-✱	308
3	7-1/2	15	25	30	50	50	1	0	CAN7-85-10-✱	482
4	~	~	40	50	100	100	1	1	CAN6-180-11-✱	1608
									CAN6-180-EI-11-✱	1850
5	~	~	75	100	200	200	1	1	CAN6-300-EI-11-✱	2375

CAN7 NEMA labeled contactor (AC)

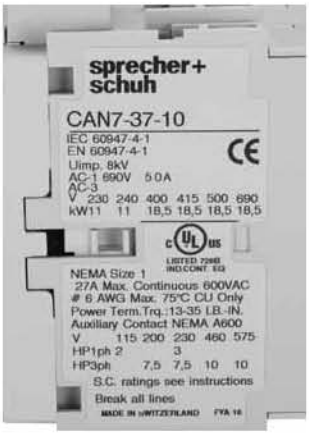

Application Notes

- NEMA contactors are UL Listed and rated in accordance with the requirements of NEMA standards publication ICS-2. These contactors are labeled for applications that require compliance with NEMA standards.
- Sizes are based on standard NEMA classifications.
- Easy coil change and contact replacement. See page A61 for CAN7 coils and pages A106-108 for CA(N)6 coils and contacts.
- Snap-on auxiliary contact blocks available in many configurations. See pages A52-53 (CA[N]7) and page A104 (CA[N]6).
- Available as open units or in NEMA 1, 3R, 4, 4X and 12 enclosures. Contact your Sprecher + Schuh representative for enclosed pricing. NEMA sized starters with AC Coils are listed on page C26.

Note: CA6 open-type contactors include terminal bolts. If lugs are required, see page A101 for ordering information.

CAN7 AC Coil Codes ❷

CAN7-12...85		
AC Coil Code	Voltage Range 50 Hz	60 Hz
24Z	24V	24V
120	110V	120V
208	~	208V
220W	~	208V-240V
240	220V	240V
277	240V	277V
380	380V-400V	440V
480	440V	480V
600	550V	600V

CAN6 AC Coil Codes Conventional Coils ❷

CAN6-180		
AC Coil Code	Voltage Range 50 Hz	60 Hz
24	~	24V
120B	110V	120V
208	~	208V
240B	220-230V	260V
277	240V	277V
380	380V-400V	440V
480	415V	480V
575	500V	575V

CAN6 AC Coil Codes "EI" Electronic Coils ❷❸

CAN6-180-EI...300-EI	
AC Coil Code	Voltage Range 50 Hz / 60 Hz
24 ❹	24V
120	110-130V
220W	208-277V
460W	380-500V

Ordering Instructions

Specify Catalog Number	
Replace (✱) with Coil Code	See Coil Codes on this page.

❶ Refer to page A87 for CAN7 dimensional information and page A127 for CA(N)6 dimensions.
❷ Other voltages available, see page A61 for CAN7 and pages A106-107 for CA(N)6. *Nonstandard coil voltages not listed here must be ordered and installed separately as renewal parts.*
❸ "-EI" designates contactor with Electronic Interface coil.
❹ 24 V AC coil not available for CAN6-300-EI.

SSNA9000

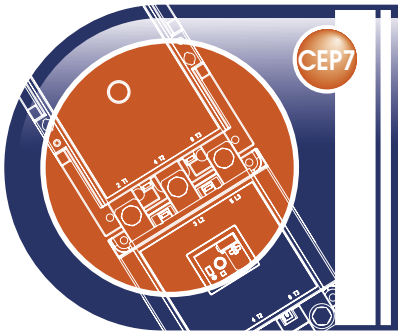

Advanced Solid State Motor Protection

Second Generation CEP7 Solid State Overload Relays

The introduction of the second generation of CEP7 solid state overload relays advances Sprecher + Schuh's leading edge technology with several improved features. This second generation of CEP7 overload relay includes features like:

- Selectable trip class and field installable modules
- A wider (5:1) set current adjustment range
- A more robust mechanical and electrical mounting
- Self latching mechanism

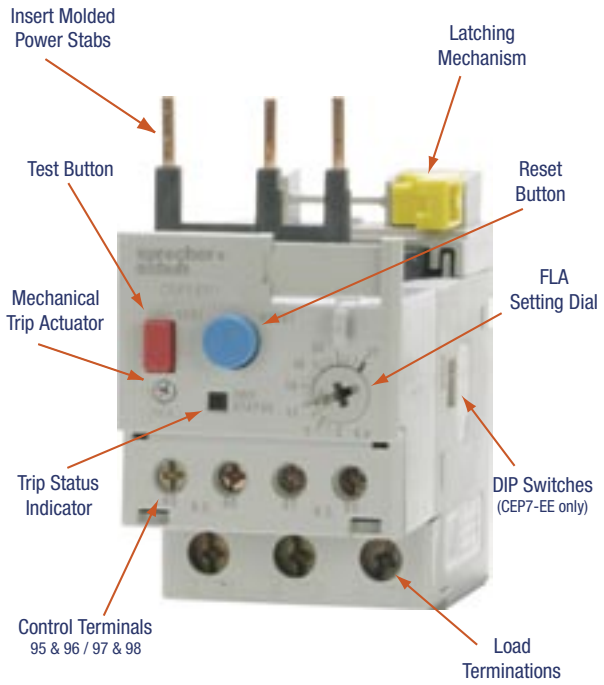

Fewer units means greater application flexibility

The new CEP7 is available in three basic models:

- CEP7-ED1 is a Class 10, manual reset model available up to 27 amperes which covers the most common horsepower motors and your every day application. This model is economically priced to be competitive with adjustable bimetallic overload relays.
- CEP7-EE is full featured selectable trip class (10, 15, 20 & 30) 3-phase application overload relay. Provisioned for field mountable modules to handle remote reset, stall and other modules, previously available only in higher priced electronic overload relays. Manual reset or automatic reset can be selected with dip switches on the new CEP7-EE models.
- CEP7S-EE is a 1-phase application overload relay packing all features of the 3-phase CEP7-EE model.

Wide current adjustment range

Thermal or bimetallic overload relays typically have a small current adjustment range of 1.5:1 meaning that the maximum setting is generally 1.5 times the lower setting. The first generation of CEP7 caused the industry to take note of the flexibility when it introduced a 3.2:1 adjustment ratio. A wider adjustment range is the primary reason the industry has been turning to more specifications calling for electronic overload relay protection over thermal overload relays. Sprecher + Schuh, building on field experience, now introduces a CEP7 overload capable of adjustment to a maximum of five times the minimum set current. This dramatically reduces the number of units required on-hand to cover the full range of current settings up to 800 amperes.

Second Generation Advantage ...

- Selectable tripping class
- Choice of reset options
- More robust design
- Increased accuracy
- Improved motor protection
- Self-powered design
- Lowers energy requirements
- Saves money
- Reduces panel space
- Superior phase failure protection

sprecher+schuh

Second Generation CEP7 Solid State Overload Relays

Directly Mounted CEP7 Solid State Overload Relays, Manual Reset ❶❷❸❹

Overload Relay	Directly Mounts to Contactor… ❷	Adjustment Range (A)	Trip Class 10 Catalog Number
Manual Reset for 3Ø Applications ❶			
	CA7-9…CA7-23	0.1…0.5	**CEP7-ED1AB**
		0.2…1.0	**CEP7-ED1BB**
		1.0…5.0	**CEP7-ED1CB**
		3.2… 16	**CEP7-ED1DB**
		5.4…27	**CEP7-ED1EB**

Directly Mounted CEP7 Solid State Overload Relays, Automatic/Manual Reset ❶❷❸❹

Overload Relay	Directly Mounts to Contactor… ❷	Adjustment Range (A)	Adjustable Trip Class 10, 15, 20 & 30 Catalog Number
Automatic or Manual Reset for 3Ø Applications ❶			
	CA7-9…CA7-23	0.1…0.5	**CEP7-EEAB**
		0.2…1.0	**CEP7-EEBB**
		1.0…5.0	**CEP7-EECB**
		3.2… 16	**CEP7-EEDB**
		5.4…27	**CEP7-EEEB**
	CA7-30…CA7-43	1.0…5.0	**CEP7-EECD**
		3.2…16	**CEP7-EEDD**
		5.4…27	**CEP7-EEED**
		9…45	**CEP7-EEFD**
	CA7-60…CA7-85	5.4…27	**CEP7-EEEE**
		9…45	**CEP7-EEFE**
		18…90	**CEP7-EEGE**
Automatic or Manual Reset for 1Ø Applications ❶			
	CA7-9…CA7-23	1.0…5.0	**CEP7S-EEPB**
		3.2…16	**CEP7S-EERB**
		5.2…27	**CEP7S-EESB**
	CA7-30…CA7-43	9…45	**CEP7S-EETD**
	CA7-60…CA7-85	18…90	**CEP7S-EEUE**

Large Amp CEP7 Solid State Overload Relays, Automatic and Manual Reset ❶❷❸❹

Overload Relay	Directly Mounts to Contactor...❷	CT Ratio	Adjustment Range (A)	Selectable Trip Class Catalog Number
Automatic or Manual Reset for 3Ø Applications ❶❸				
	CA6-95...-180	150:5	30...150	**CEP7-EEHF**
		200:5	40...200	**CEP7-EEJF**
	CA6-210...-420	200:5	40...200	**CEP7-EEJG**
		300:5	60...300	**CEP7-EEKG**
		500:5	100...500	**CEP7-EELG**
	CA6-630...-860	600:5	120...600	**CEP7-EEMH**
		800:5	160...800	**CEP7-EENH**

Side Mount Remote Reset Modules

Typical

Catalog Number	Description	For use with…
CEP7-ERR	**Remote Reset Module** • Remote reset after trip	Side-mount to any CEP7-EE_ CEP7S-EE_
CEP7-EJM	**Jam Protection and Remote Reset Module** • Dip switch adjustable Jam Protection • Remote reset after trip	
CEP7-EGF	**Ground Fault Protection and Remote Reset Module** • Adjustable Ground Fault Protection • LED status indication • Remote reset after trip	Side-mount to any CEP7-EE_ CEP7S-EE_
CEP7-EGJ	**Ground Fault/Jam Protection and Remote Reset Module** • Adjustable Ground Fault Protection • Excessive FLA Jam trip • LED status indication • Remote reset after trip	Must use with CEP7-CBCT_ Current Sensor
CEP7-EPT	**PTC Thermistor Relay and Remote Reset Module** • PTC Protection and LED Status • Remote reset after trip	Side-mount to any CEP7-EE_ CEP7S-EE_

❶ 3-phase CEP7 units are only designed for 3Ø applications. Single phase CEP7S units are only designed for single phase applications.

❷ This reference is not intended to be a guide for selecting contactors. Size overload relays using the full load current of the motor.

❸ The reset time of a CEP7 set in the automatic mode is approximately 180 seconds.

❹ CEP7 overload relays do not work with Variable Frequency Drives, DC Applications or Softstarters with braking options.

Sprecher + Schuh US Division Headquarters
15910 International Plaza Dr., Houston, TX 77032
Tel: (281) 442-9000; Fax: (800) 739-7370
www.sprecherschuh.com

Sprecher + Schuh Canadian Division
3610 Nashua Dr., Unit 10, Mississauga, Ontario L4V 1L2
Tel: (905) 677-7514; Fax: (905) 677-7663

sprecher+schuh

Publication No: F-CEP7II-0207 3/07

UL fuse holders: USCC

Electrical characteristics

Nominal Voltage Ui AC/DC	Voltage Isolation Uimp	Nominal Current	Max. power losses in the fuse links	Fuse links rating	Maxi RMS* Current for 1,2, 3 and 3+N poles with FS fuse links For 4, 5 and 6 poles x by 0.9 For 7, 8, 9 poles x 0.8 For ≥ 10 poles x by 0,7			Cable wire section (mm^2) recommanded
					ATDR	ATM	ATMR	
600V AC	6 kV	30 A	3 W	≤20	20	20	20	2.5
600V AC	6 kV	30 A	3 W	25	25	25	25	4
600V AC	6 kV	30 A	3 W	30	30	30	30	6

ULTRASAFE™ Fuse holders for Class CC fuse links

ULTRASAFE™ Fuse holder without fuse light melting indicator

Nb of Pole	Cat. Number	Ref. Number	Nb of Mode (17.5mm)	Pack	Sur Condi
1	**USCC1**	H305033	1	12	
2	**USCC2**	K305035	2	6	
3	**USCC3**	L305036	3	4	
4	**USCC4**	N305038	4	3	
2	**USCC1N**	J305034	2	6	
4	**USCC3N**	M305037	4	3	

ULTRASAFE™ Fuse holder with fuse light melting indicator

Nb of Pole	Cat. Number	Ref. Number	Nb of Mode (17.5mm)	Pack	Sur Condi
1	**USCC1I**	P305039	1	12	
2	**USCC2I**	R305041	2	6	
3	**USCC3I**	S305042	3	4	
4	**USCC4I**	V305044	4	3	
2	**USCC1NI**	Q305040	2	6	
4	**USCC3NI**	T305043	4	3	

Accessories

Description	Cat. Number	Ref. Number	Nb of Mod. (17.5 mm)	Maxi. RMS current (A)	Number of Poles	Pack	Sur Condi
Kit for Multi-Phase connection links	**CMS810PAK**	Z233725				12	
Lock	**LOCK**	M223525				1	
Tag and lockout	**TAGLOCKCMS810**	A235773				1	
jumping bars 1 phase size 8/10 *	**CMS810BB1F13**	T210306	13	63	1	10	
jumping bars 2 phases size 8/10 *	**CMS810BB2F6**	V210307	6	63	2	10	
jumping bars 3 phases size 8/10 *	**CMS810BB3F4**	W210308	4	100	3	10	
jumping bars 4 phases size 8/10 *	**CMS810BB4F3**	X210309	3	100	4	10	
1 phase lateral incoming power supply	**TBB1C**	E210316		90		50	
2 & 3 phases lateral incoming power supply	**TBB23C**	G210318		90		50	
1 phase axial incoming power supply	**TBB1A**	D210315		90		50	
2 & 3 phases axial incoming power supply	**TBB23A**	F210317		90		50	

*Note *: It is possible to use a rigid cable 16 mm² with a jumping bar 1.5 mm thick.*

ATQR

TIME DELAY/CLASS CC

TAKE *CONTROL* OF FAULT CURRENTS HEADED FOR YOUR *CONTROL* TRANSFORMER

ATQR small-dimension fuses feature time delay characteristics ideally suited for the high inrush currents of control transformers, solenoids, and similar inductive loads. The newest member of our Amp-trap 2000® family of fuses - ATQR fuses provide superior protection for the branch circuits of electrical distribution systems.

Features/Benefits

- **Time delay** for control transformer inrush loads without nuisance opening
- **Highly current limiting** for low peak let-thru current
- **Rejection-style design** prevents replacement errors (when used with recommended fuse blocks)
- **High-visibility orange label** ensures instant recognition, and simplifies replacement
- **Metal-embossed date and catalog number** for traceability and lasting identification
- **Fiberglass body** provides dimensional stability in harsh industrial settings
- **High-grade silica filler** ensures fast arc quenching and high current limitation

HIGHLIGHTS:

- Time Delay
- Best Choice for Small Transformer Protection
- Most Current-Limiting

APPLICATIONS:

- Control Transformers
- Solenoids
- Inductive Loads
- Lighting, Heating & General-purpose Loads

Ratings

- **AC:** 1/10 to 30A 600VAC, 200kA I.R.
- **DC:** 1/10 to 30A300VDC, 100kA I.R.

Approvals

- UL Listed to Standard 248-4
- DC Listed to UL Standard 248
- CSA Certified to Standard C22.2 No. 248.4

TIME DELAY/CLASS CC FUSES

Standard Fuse Ampere Ratings, Catalog Numbers

AMPERE RATING	CATALOG NUMBER	AMPERE RATING	CATALOG NUMBER	AMPERE RATING	CATALOG NUMBER	AMPERE RATING	CATALOG NUMBER
1/10	ATQR1/10	8/10	ATQR8/10	2-8/10	ATQR2-8/10	7-1/2	ATQR7-1/2
1/8	ATQR1/8	1	ATQR1	3	ATQR3	8	ATQR8
3/16	ATQR3/16	1-1/8	ATQR1-1/8	3-2/10	ATQR3-2/10	9	ATQR9
2/10	ATQR2/10	1-1/4	ATQR1-1/4	3-1/2	ATQR3-1/2	10	ATQR10
1/4	ATQR1/4	1-4/10	ATQR1-4/10	4	ATQR4	12	ATQR12
3/10	ATQR3/10	1-1/2	ATQR1-1/2	4-1/2	ATQR4-1/2	15	ATQR15
4/10	ATQR4/10	1-6/10	ATQR1-6/10	5	ATQR5	17-1/2	ATQR17-1/2
1/2	ATQR1/2	1-8/10	ATQR1-8/10	5-6/10	ATQR5-6/10	20	ATQR20
6/10	ATQR6/10	2	ATQR2	6	ATQR6	25	ATQR25
3/4	ATQR3/4	2-1/4	ATQR2-1/4	6-1/4	ATQR6-1/4	30	ATQR30
		2-1/2	ATQR2-1/2	7	ATQR7		

Recommended ATQR Class CC Primary Fuses For Single Phase Control Transformers

TRANS VA	PRIMARY VOLTS	PRIMARY FLA	ATQR AMPS
25	600	0.04	1/10
	480	0.05	1/10
	240	0.10	2/10
	208	0.12	1/4
	120	0.21	4/10
50	600	0.08	1/4
	480	0.10	1/4
	240	0.21	4/10
	208	0.24	1/2
	120	0.42	6/10
75	600	0.13	1/4
	480	0.16	3/10
	240	0.31	1/2
	208	0.36	3/4
	120	0.63	1
100	600	0.17	3/10
	480	0.21	4/10
	240	0.42	6/10
	208	0.48	1
	120	0.83	1-1/2
150	600	0.25	1/2
	480	0.31	1/2
	240	0.63	1
	208	0.72	1-1/2
	120	1.25	2-1/2
200	600	0.33	1/2
	480	0.42	6/10
	240	0.83	1-1/2
	208	0.96	2
	120	1.67	3
250	600	0.42	6/10
	480	0.52	1-1/8
	240	1.04	2
	208	1.2	3
	120	2.08	4*

TRANS VA	PRIMARY VOLTS	PRIMARY FLA	ATQR AMPS
300	600	0.50	1-1/8
	480	0.63	1-1/2
	240	1.25	2-1/2
	208	1.44	3
	120	2.5	5*
500	600	0.83	1-1/2
	480	1.04	2
	240	2.08	4*
	208	2.40	6*
	120	4.17	10*
750	600	1.25	2-1/2
	480	1.56	3
	240	3.13	7*
	208	3.61	8*
	120	6.25	15*
1000	600	1.67	3
	480	2.08	4*
	240	4.16	10*
	208	4.81	12*
	120	8.33	20*
1500	600	2.50	5*
	480	3.13	7*
	240	6.25	10
	208	7.21	20*
	120	12.5	25*
2000	600	3.33	8*
	480	4.17	10*
	240	8.33	20++*
	208	9.62	20++*
3000	600	5.00	12+*
	480	6.25	15+*
	240	12.5	30++*
5000	600	8.33	20++*
	480	10.4	25+*

Dimensions

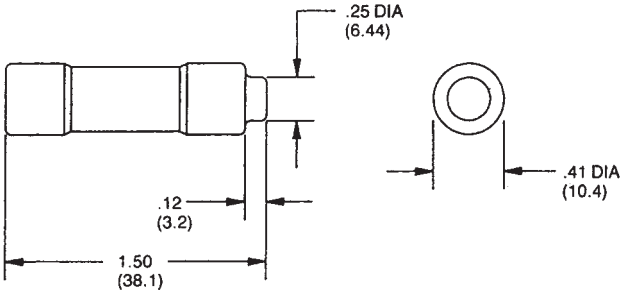

Recommended Fuse Blocks for Class CC Fuses

Number of Poles	ULTRASAFE™ Indicating Fuse Holder	Screw with Double Quick Connects	Pressure Plate with Double Quick Connects	Copper Box Connector
ADDER		30310R	30320R	30350R
1	USCC1I	30311R	30321R	30351R
2	USCC2I	30312R	30322R	30352R
3	USCC3I	30313R	30323R	30353R

Primary fuses - If primary FLA is less than 2 amps, fuse may be 300% max. (500% for motor control). If primary FLA exceeds 2 amps but is less than 9 amps, fuse may not exceed 167% of primary FLA unless secondary protection is used, when it may be increased to 250%. Fuse sizes shown are based on approx. 40 x FLA for .01 sec.

* Secondary protection is required for these ratings.
\+ Fuse will withstand 30 x FLA for .01 second
++ Fuse will withstand 25 x FLA for .01 second

NEW

GROUP B (CONTINUED)

240 X 480, 230 X 460, 220 X 440 PRIMARY VOLTS — 120/115/110 SECONDARY VOLTS — 1Ø, 50/60 Hz

CATALOG NO. ②	VA RATING	OUTPUT AMPS @ 120V	APPROX. DIMENSIONS INCHES (CM.) A	B	C	D	E	F	APPROX. SHIP WEIGHT LBS. (KG.)	PRIMARY FUSE BLOCK PART NO.	SECONDARY FUSE KIT ① PART NO.	SECONDARY FUSE SIZE 120 VOLTS
TA-2-81218	1500	12.50	8.80 (22.4)	6.75 (17.1)	5.72 (14.5)	5.75 (14.6)	5.75 (14.6)	.31 x .50 (0.8 x 1.3)	43 (19.5)	PL-112705	PL-112601	15 amps
TA-2-81219	2000	16.67	9.25 (23.5)	6.75 (17.1)	5.72 (14.5)	5.75 (14.6)	6.38 (16.2)	.31 x .50 (0.8 x 1.3)	49 (22.2)	PL-112705	PL-112601	20 amps
TA-2-81220	3000	25.00	8.81 (22.4)	7.50 (19.1)	8.34 (21.2)	6.50 (16.5)	7.52 (19.1)	.41 x .81 (1.0 x 2.1)	70 (31.8)	PL-112706	—	—
TA-2-81221	5000	41.67	7.52 (19.1)	11.92 (30.3)	9.49 (24.1)	6.75 (17.1)	6.25 (15.9)	.41 x .81 (1.0 x 2.1)	125 (56.7)	PL-112707	—	—

⋆ See fusing chart for secondary fuse kits.

Integrally Mounted Fuse Blocks Available:

(See Chart)

GROUP 'A' THROUGH 500 VA

GROUP 'B' THROUGH 1000 VA

ADD SUFFIX TO CATALOG NO.	CONFIGURATION
– F2	Factory installed integrally mounted 2-pole primary block
– F3	Factory installed integrally mounted 3-pole primary and secondary block (100 VA & larger)
– F4	Factory installed 2-pole primary block and secondary fuse clips (50 & 75 VA)

Consult factory for other sizes available.

GROUP C

240/480/600, 230/460/575, 220/440/550 PRIMARY VOLTS — 120/100, 115/95, 110/90 SECONDARY VOLTS — 1Ø, 50/60 Hz

CATALOG NO.	VA RATING	OUTPUT AMPS @ 120V	APPROX. DIMENSIONS INCHES (CM.) A	B	C	D	E	F	APPROX. SHIP WEIGHT LBS. (KG.)	PRIMARY FUSE BLOCK PART NO.	SECONDARY FUSE KIT ① PART NO.	SECONDARY FUSE SIZE 120 VOLTS
NEW TB-81000	50	0.42	4.56 (11.6)	3.00 (7.6)	2.70 (6.8)	2.50 (6.4)	2.61 (6.6)	.22 x .50 (0.6 x 1.3)	4 (1.8)	PL-112700	*	6/10 amp
NEW TB-81009	75	0.63	4.90 (12.4)	3.00 (7.6)	2.70 (6.8)	2.50 (6.4)	2.81 (7.1)	.22 x .50 (0.6 x 1.3)	4 (1.8)	PL-112700	*	1 amp
NEW TB-81001	100	0.83	5.36 (13.6)	3.00 (7.6)	2.70 (6.8)	2.50 (6.4)	3.26 (8.3)	.22 x .50 (0.6 x 1.3)	5 (2.3)	PL-112700	*	1 1/4 amps
NEW TB-81002	150	1.25	5.00 (12.7)	3.75 (9.5)	3.40 (8.6)	3.13 (8.0)	3.06 (7.8)	.22 x .50 (0.6 x 1.3)	7 (3.2)	PL-112701	*	2 amps
NEW TB-81003	250	2.08	5.57 (14.1)	4.50 (11.4)	3.84 (9.8)	3.75 (9.5)	3.50 (8.9)	.22 x .50 (0.6 x 1.3)	11 (5.0)	PL-112702	*	3 2/10 amps
NEW TB-81020	300	2.50	6.48 (16.5)	4.65 (11.8)	4.15 (10.5)	4.06 (10.3)	4.06 (10.3)	.22 x .50 (0.6 x 1.3)	15 (6.8)	PL-112702	*	4 amps
NEW TB-81004	350	2.92	6.48 (16.5)	4.65 (11.8)	4.15 (10.5)	4.06 (10.3)	4.06 (10.3)	.22 x .50 (0.6 x 1.3)	15 (6.8)	PL-112702	*	4 1/2 amps
NEW TB-81005	500	4.17	6.43 (16.3)	5.25 (13.3)	4.47 (11.4)	4.38 (11.1)	4.56 (11.6)	.31 x .50 (0.8 x 1.3)	21 (9.5)	PL-112704	*	6 1/4 amps
NEW TB-81006	750	6.25	7.19 (18.3)	6.75 (17.1)	5.78 (14.7)	5.75 (14.6)	3.81 (9.7)	.31 x .50 (0.8 x 1.3)	25 (11.3)	PL-112705	*	10 amps
NEW TB-81007	1000	8.33	7.96 (20.2)	6.75 (17.1)	5.78 (14.7)	5.75 (14.6)	4.63 (11.8)	.31 x .50 (0.8 x 1.3)	32 (14.5)	PL-112705	*	12 amps
TA-2-81008	1500	12.50	9.46 (24.0)	6.75 (17.1)	5.72 (14.5)	5.75 (14.6)	6.38 (16.2)	.31 x .50 (0.8 x 1.3)	47 (21.3)	PL-112705	PL-112601	15 amps
TA-2-53929	2000	16.67	7.90 (20.1)	7.50 (19.1)	7.66 (19.5)	6.50 (16.5)	6.57 (16.7)	.41 x .81 (1.0 x 2.1)	55 (24.9)	PL-112706	PL-112601	20 amps
TA-2-53930	3000	25.00	7.02 (17.8)	11.92 (30.3)	8.83 (22.4)	6.75 (17.1)	5.75 (14.6)	.41 x .81 (1.0 x 2.1)	75 (34.0)	PL-112707	—	—
TA-2-53931	5000	41.67	7.52 (19.1)	11.92 (30.3)	9.49 (24.1)	6.75 (17.1)	6.25 (15.9)	.41 x .81 (1.0 x 2.1)	110 (49.9)	PL-112707	—	—

⋆ See fusing chart for secondary fuse kits.

① Secondary Fuse Kit PL-112603 may be substituted for PL-112600 thru PL-112602 when Primary Fuse Kit is used. See page 71.
② See chart for integrally mounted fuse block catalog number suffix.

Tripp Lite
1111 West 35th Street
Chicago, IL 60609 USA
Telephone: +(773) 869 1234
E-mail: saleshelp@tripplite.com

Model #: SU1000RTXL2UA

SmartOnline 1kVA On-Line Double-Conversion UPS, 2U Rack/Tower, 100/110/120V NEMA outlets

Highlights

- 1000VA / 1kVA / 800 watt on-line double-conversion 2U rack/tower UPS
- 100/110/120V +/-2% output at 50/60Hz, high efficiency economy mode option
- Expandable runtime, Hot-swap batteries; 13.5 in / 34.3cm installed depth
- USB, RS232 & EPO ports; support for SNMP/WEB card options
- Front panel status LEDs with detailed load and battery metering
- 2 independently switchable output load banks
- NEMA 5-15P input; 5-15R outlets

Description

1000VA on-line, double-conversion UPS system for critical server, network and telecommunications equipment. 2U rackmount form factor with an installed depth of only 13.5 inches. Extended runtime available with optional BP24V15RT2U (limit 1), BP24V28-2U (limit 1) or BP24V70-3U (multi-pack compatible) external battery packs. Full-time sine wave 100, 110 or 120V output with +/-2% voltage regulation. Online, double-conversion Uninterruptible Power Supply (UPS) actively converts raw incoming AC power to DC, then re-converts output back to completely regulated, filtered AC output. Operates continuously without using battery power during brownouts to 65V and overvoltages to 150V. Highly efficient operation in optional economy mode saves BTU heat output and energy costs. NEMA 5-15P input plug; NEMA 5-15R output receptacles. Network-grade AC surge and noise suppression. Zero transfer time between AC and battery operation. Network management interfaces support simultaneous communications via USB port, DB9 serial port and SNMPWEBCARD slot. Built-in DB9 port offers both enhanced RS-232 enabled monitoring data, plus contact closure monitoring ability. HID-compliant USB interface enables integration with built-in power management and auto shutdown features of Windows and Mac OS X.Supports simultaneous detailed monitoring of equipment load levels, self-test data and utility power conditions via all 3 network interfaces. Includes PowerAlert monitoring software and complete cabling. Emergency Power Off (EPO) interface. Integrated two-bank PDU switching supports load shedding and remote reboot of connected equipment. 3-stage metered current monitoring and battery charge status LEDs. LED display panel easily rotates for viewing in rackmount or tower configurations. Dataline surge suppression for dialup, DSL or network Ethernet connection. Utility power and voltage regulation LEDs. Audible alarm. Self-test. Fault-tolerant auto-bypass mode. 4-post rackmount accessories included; 2-9USTAND tower kit and 2POSTRMKITWM 2-post rack & wallmount accessories available. Field-replaceable, hot-swappable internal batteries and external battery packs. Attractive all-black color scheme. 2-year warranty and $250,000 connecte connected equipment insurance; extended warranty and service contracts available.

Package Includes

- SU1000RTXL2Ua Online Double-Conversion UPS System
- PowerAlert Software and cabling
- Mounting hardware for 4 post rack enclosures
- Instruction manual

Features

- SmartOnline high performance UPS system is ideal for critical voice, data, medical and industrial network applications
- True on-line, double-conversion UPS provides perfectly regulated sine wave output within 2% of 100/110/120V (user selectable) under all

usage conditions
- Maintains continuous operation through blackouts, voltage fluctuations and surges with zero transfer time
- Highly efficient operation in optional economy mode setting, saving BTU heat output and energy costs
- Removes harmonic distortion, fast electrical impulses, frequency variations and other hard to solve power problems not addressed by other UPS types
- Corrects line voltage conditions as low as 65V and as high as 150V back to selectable 100/110/120V (+/-2%) values
- Standard internal battery set offers 14 minutes runtime at half load (400W) and 4.5 minutes at full load (800W)
- Extended runtime available with optional BP24V15RT2U (limit 1), BP24V28-2U (limit 1) or BP24V70-3U (no limit) external battery packs
- Compact rackmount form factor installs using only 2 rack spaces (2U) with a maximum installed depth of only 13.5 inches
- Ships with all mounting accessories for 4 post rackmount installation
- Optional 2POSTRMKITWM enables 2 post rackmount or wallmount installation
- Optional 2-9USTAND accessory enables small-footprint upright tower placement
- Fault tolerant electronic bypass maintains utility output during a variety of UPS fault conditions
- Network interfaces support simultaneous communications via built-in USB, DB9 serial / contact-closure and SNMPWEBCARD slot
- HID-compliant USB interface enables integration with built-in power management and auto shutdown features of Windows and Mac OS X
- Included PowerAlert UPS monitoring software supports safe unattended shutdown, monitoring and control via local connected servers, plus any number of additional servers over IP
- UPS interface supports on-battery, low-battery, power-restored, AC-voltage, DC-voltage, output current monitoring, battery charge current, battery capacity, AC line frequency, timed inverter shutoff, activate self-test, load bank output power control and remote reboot, UPS nominal voltage adjustment and UPS line to battery power voltage set points
- Built-in Emergency Power Off (EPO) interface with cable
- NEMA 5-15P input plug/NEMA 5-15R output receptacles
- Integrated 2 bank switched PDU enables remote outlet management for load shedding or remote reboot of individual devices (each load bank consists of one outlet)
- Front panel LEDs offer current monitoring and battery charge level information
- UPS ships fully assembled in full compliance with DOT regulations, no time consuming connection of internal batteries by user required
- Single line TEL/DSL or network Ethernet line surge suppression
- 2 year manufacturer's product warranty, $250,000 Ultimate Lifetime Insurance

Specifications

OUTPUT	
Output Volt Amp Capacity (VA)	1000
Output kVA capacity (kVA)	1
Output Watt Capacity (watts)	800
Output power factor	0.8
Crest Factor	3:1
Nominal Output Voltage(s) Supported	100V; 110V; 120V
Nominal Voltage details	120V default
Frequency compatibility	50 / 60 Hz
Frequency compatibility details	Output frequency matches input nominal on startup, defaults to 60 Hz on cold-start
Output voltage regulation (line mode)	+/- 2%
Output voltage regulation (Economy line mode)	+/- 10%

Output voltage regulation (Battery mode)	+/- 2%
Built-in UPS output receptacles	6 5-15R outlet(s)
Built-in controllable switched load banks	Two switchable single-outlet 5-15R load banks
Output AC waveform (AC mode)	Sine wave
Output AC waveform (battery mode)	Pure Sine wave
INPUT	
Rated input current (at maximum load)	8.6A
Nominal Input Voltage(s) Supported	100V AC; 110V AC; 120V AC
UPS input connection type	5-15P
Input circuit breaker	15A
UPS Input cord length (ft.)	10
UPS Input cord length (m)	3
Recommended Electrical Service	15A 120V
BATTERY	
Full load runtime (minutes)	4.5 min. (800w)
Half load runtime (minutes)	14 min. (400w)
Expandable battery runtime	Extended runtime supported via optional external battery packs
External battery pack compatibility	BP24V15RT2U (limit 1); BP24V28-2U (limit 1); BP24V70-3U (multi-pack compatible)
DC system voltage (VDC)	24
Battery recharge rate (included batteries)	Less than 6 hours from 10% to 80%
Replacement battery cartridge (internal UPS battery replacement)	RBC92-2U
Battery Access	Front panel battery access door
Battery replacement description	Hot-swappable, user replaceable batteries
VOLTAGE REGULATION	
Voltage regulation description	Online, double-conversion power conditioning

Overvoltage correction	2% output voltage regulation during overvoltages to 150
Undervoltage correction	2% output voltage regulation during undervoltages to 80
Severe undervoltage correction	2% output voltage regulation during undervoltages to 65 (under 70% load only)
LEDS ALARMS & SWITCHES	
LED Indicators	14 LEDs indicate line power, online mode, economy/bypass mode, on-battery, overload, battery low, replace battery and fault status information; 4-LED meter displays load and battery charge levels; LED panel rotates for viewing in rack/tower formats
Alarms	Audible alarm indicates UPS startup, power-failure, low-battery, overload, UPS fault and remote shutdown conditions
Alarm cancel operation	Power-fail alarm can be silenced using alarm-cancel switch
Switches	2 switches control off/on power status and alarm-cancel/self-test operation
SURGE / NOISE SUPPRESSION	
UPS AC suppression joule rating	510
UPS AC suppression response time	Instantaneous
UPS Dataline suppression	1 line TEL/DSL (1 in / 1 out); 10/100Base T Ethernet
EMI / RFI AC noise suppression	Yes
PHYSICAL	
Installation form factors supported with included accessories	4 post 19 inch rackmount (mounting rail kit included)
Installation form factors supported with optional accessories	2 post rackmount (2POSTRMKITWM); Wallmount (2POSTRMKITWM); Tower (2-9USTAND)
Primary form factor	Rackmount
UPS / Power Module dimensions in primary form factor (height x width x depth / inches)	3.5 x 17.5 x 13.5
UPS / Power Module dimensions in primary form factor (height x width x depth / cm)	8.9 x 44.4 x 34.3
Installed whole system total rack space height (rack spaces)	2U
Secondary form factor	Tower (requires 2-9USTAND)
UPS / Power Module weight (lbs)	29

UPS / Power Module weight (kg)	13.2
UPS Shipping dimensions (height x width x depth / inches)	9.5 x 20 x 24
UPS Shipping dimensions (height x width x depth / cm)	24.1 x 50.8 x 61
Shipping weight (lbs)	41
Shipping weight (kg)	18.6
UPS housing material	Steel
Cooling method	Fan
ENVIRONMENTAL	
Operating Temperature Range	+32 to +104 degrees Fahrenheit / 0 to +40 degrees Celsius
Storage Temperature Range	+5 to +122 degrees Fahrenheit / -15 to +50 degrees Celsius
Relative Humidity	0 to 95%, non-condensing
AC mode BTU / hr. (full load)	406.4
AC economy mode BTU / hr. (full load)	173.6
Battery mode BTU / hr. (full load)	442.8
AC economy mode efficiency rating (100% load)	94%
COMMUNICATIONS	
Communications interface	USB (HID enabled); DB9 Serial; Contact closure; EPO (emergency power off); Slot for SNMP/Web interface
Network monitoring port description	Supports detailed monitoring of UPS and site power conditions; DB9 port supports RS232 and contact closure communications
PowerAlert software	Included
Communications cable	USB and DB9 cabling included
WatchDog compatibility	Supports Watchdog application, OS and hard-reboot restart options for remote applications
LINE / BATTERY TRANSFER	
Transfer time	No transfer time (0 ms.) in online, double-conversion mode
Low voltage transfer to battery power (setpoint)	80V (100% load), 65V (
High voltage transfer to battery power (setpoint)	150
SPECIAL FEATURES	

Cold Start (startup in battery mode during a power failure)	Cold-start operation supported
High availability UPS features	Automatic inverter bypass; Hot swappable batteries
Green & high efficiency features	High efficiency economy mode operation; Individually controllable load banks; Schedulable daily hours of economy mode operation
CERTIFICATIONS	
UPS Certifications	Tested to UL1778 (USA); Tested to CSA (Canada); Meets FCC Part 15 Category B (EMI)
WARRANTY	
Product Warranty Period (U.S., Canada & Puerto Rico)	2-year limited warranty
Connected Equipment Insurance (U.S., Canada & Puerto Rico)	$250,000 Ultimate Lifetime Insurance

Related Items

Optional Products

Product Type	Related Model	Description	Qty.
Extended Warranties	WEXT3-500-1500	3-Year Extended Warranty - For Smart Line-Interactive and Online Tower or Rack models, 1500VA or less	1
Extended Warranties	WEXT5-500-1500	5-Year Extended Warranty - For Smart Line-Interactive and Online Tower or Rack models, 1500VA or less	1
External Battery Packs	BP24V15RT2U	BP24V15RT2U - External Battery Pack for UPS System	1
External Battery Packs	BP24V28-2U	BP24V28-2U - External Battery Pack for UPS System	1
External Battery Packs	BP24V70-3U	BP24V70-3U - External Battery Pack for UPS System	1
Power Distribution	PDUB15	Dual source Power Distribution Unit / PDU with Manual Transfer Switch enables Hot-swappable UPS Replacement in Critical Network Applications	1
Power Distribution	PDUMH15AT	Metered PDU with ATS - Power Distribution Unit with dual-input Auto Transfer Switching	1
Power Distribution	PDUMNV15	Monitored PDU / Power Distribution Unit supports real-time remote monitoring of load level, voltage and frequency with options for remote environmental and security monitoring	1
Power Distribution	PDUMV15	Metered PDU / Power Distribution Unit - Safe, reliable power distribution with digital current meter	1
Power Distribution	PDUMV15NET	Switched, Metered PDU with Remote Monitoring - 0U Vertical Rackmount Power Distribution Unit for Networks with Individually Switchable Outlets, Current Metering, Remote Monitoring and Control	1
Rackmount/Wallmount Kits	2POSTRMKITWM	Enables 2-Post Rackmount or Wallmount Installation of Select Rackmount UPS Systems	1
Shutdown Cable Kits	AS400CABLE KIT	Power Management Tools - UPS Communication Cable Kit for System i / AS400 / iSeries Servers	1
SNMP Accessories	ENVIROSENSE	Monitors temperature, humidity and contact-closure inputs. (Requires SNMPWEBCARD or switched PDU.)	1
SNMP Accessories	SNMPWEBCARD	For remote monitoring and control via SNMP, Web, or Telnet.	1
SNMP Accessories	SRSWITCH	Magnetic Door Switch Kit for front and rear doors; requires ENVIROSENSE	1

Tower Stands	2-9USTAND	Enables Tower Placement of Rackmount UPS Systems	1
UPS Accessories	MODBUSCARD	For remote monitoring and control via MODBUS protocol	1
UPS Accessories	RELAYIOCARD	Programmable Relay I/O Card	1

More information, including related products, owner's manuals, and additional technical specifications, can be found online at www.tripplite.com/en/products/model.cfm?txtModelID=2948.

Copyright © 2011 Tripp Lite. All rights reserved. All trademarks are the sole property of their respective owners. Tripp Lite has a policy of continuous improvement. Specifications are subject to change without notice. Photos may differ slightly from final products.

Trip Characteristic C (5~10 x I_N) – *Inductive loads*

❶ UL/CSA Max. Volt.	Rated Current (A)	1 Pole ❷			2 Pole ❸			3 Pole		
		Catalog Number	Price	Std. Pkg.	Catalog Number	Price	Std. Pkg.	Catalog Number	Price	Std. Pkg.
480Y/277	0.5	L9-.5/1/C	97	2	L9-.5/2/C	185	1	L9-.5/3/C	251	1
	1	L9-1/1/C	97	2	L9-1/2/C	185	1	L9-1/3/C	251	1
	1.5	L9-1.5/1/C	97	2	L9-1.5/2/C	185	1	L9-1.5/3/C	251	1
	2	L9-2/1/C	97	2	L9-2/2/C	185	1	L9-2/3/C	251	1
	3	L9-3/1/C	97	2	L9-3/2/C	185	1	L9-3/3/C	251	1
	4	L9-4/1/C	97	2	L9-4/2/C	185	1	L9-4/3/C	251	1
	5	L9-5/1/C	97	2	L9-5/2/C	185	1	L9-5/3/C	251	1
	6	L9-6/1/C	97	2	L9-6/2/C	185	1	L9-6/3/C	251	1
	7	L9-7/1/C	97	2	L9-7/2/C	185	1	L9-7/3/C	251	1
	8	L9-8/1/C	97	2	L9-8/2/C	185	1	L9-8/3/C	251	1
	10	L9-10/1/C	97	2	L9-10/2/C	185	1	L9-10/3/C	251	1
	13	L9-13/1/C	97	2	L9-13/2/C	185	1	L9-13/3/C	251	1
	15	L9-15/1/C	97	2	L9-15/2/C	185	1	L9-15/3/C	251	1
	16	L9-16/1/C	97	2	L9-16/2/C	185	1	L9-16/3/C	251	1
	20	L9-20/1/C	97	2	L9-20/2/C	185	1	L9-20/3/C	251	1
	25	L9-25/1/C	107	2	L9-25/2/C	198	1	L9-25/3/C	251	1
240	30	L9-30/1/C	110	2	L9-30/2/C	211	1	L9-30/3/C	279	1
	32	L9-32/1/C	110	2	L9-32/2/C	211	1	L9-32/3/C	279	1
	35	L9-35/1/C	110	2	L9-35/2/C	211	1	L9-35/3/C	279	1
	40	L9-40/1/C	115	2	L9-40/2/C	227	1	L9-40/3/C	292	1

L9 Miniature Circuit Breaker Features:

- UL-489 listed for Branch Circuit protection and CSA 22.2 No. 5.1 Approved
- Thermal magnetic protection
- Trip characteristic based on 40°C ambient for UL/CSA
- 10kA interrupting rating
- All ratings are HACR rated (SWD rated up to 20 A)
- Finger safe design (front)
- DIN rail mounting

❶ Rated 415V AC, 48V DC, IEC max/min meets IEC 60947-2 for miniature circuit breakers.
❷ 1-Pole 277V AC, 48V DC 0.5…25A; 240V AC, 48V DC 30…40A
❸ 2-Pole (series) 96VDC 0.5...40A

Trip Characteristic D (10~20 x I_N) – *Highly inductive loads*

❶ UL/CSA Max. Volt.	Interrupt Rating (kA)	Rated Current (A)	1 Pole ❷			2 Pole ❸			3 Pole		
			Catalog Number	Price	Std. Pkg.	Catalog Number	Price	Std. Pkg.	Catalog Number	Price	Std. Pkg.
480Y/277	10	0.5	L9-.5/1/D	97	2	L9-.5/2/D	186	1	L9-1.5/3/D	256	1
		1	L9-1/1/D	97	2	L9-1/2/D	186	1	L9-1/3/D	256	1
		1.5	L9-1.5/1/D	97	2	L9-1.5/2/D	186	1	L9-1.5/3/D	256	1
		2	L9-2/1/D	97	2	L9-2/2/D	186	1	L9-2/3/D	256	1
		3	L9-3/1/D	97	2	L9-3/2/D	186	1	L9-3/3/D	256	1
		4	L9-4/1/D	97	2	L9-4/2/D	186	1	L9-4/3/D	256	1
		5	L9-5/1/D	97	2	L9-5/2/D	186	1	L9-5/3/D	256	1
		6	L9-6/1/D	97	2	L9-6/2/D	186	1	L9-6/3/D	256	1
		7	L9-7/1/D	97	2	L9-7/2/D	186	1	L9-7/3/D	256	1
		8	L9-8/1/D	97	2	L9-8/2/D	186	1	L9-8/3/D	256	1
		10	L9-10/1/D	97	2	L9-10/2/D	186	1	L9-10/3/D	256	1
	14	13	L9-13/1/D	97	2	L9-13/2/D	186	1	L9-13/3/D	256	1
		15	L9-15/1/D	97	2	L9-15/2/D	186	1	L9-15/3/D	256	1
		16	L9-16/1/D	97	2	L9-16/2/D	186	1	L9-16/3/D	256	1
		20	L9-20/1/D	97	2	L9-20/2/D	186	1	L9-20/3/D	256	1
	10	25	L9-25/1/D	107	2	L9-25/2/D	199	1	L9-25/3/D	285	1
		30	L9-30/1/D	110	2	L9-30/2/D	199	1	L9-30/3/D	285	1
		32	L9-32/1/D	110	2	L9-32/2/D	199	1	L9-32/3/D	285	1
240	10	35	L9-35/1/D	115	2	L9-35/2/D	199	1	L9-35/3/D	285	1
		40	L9-40/1/D	115	2	L9-40/2/D	212	1	L9-40/3/D	310	1

L9 Miniature Circuit Breaker Features:

- UL-489 listed for Branch Circuit protection and CSA 22.2 No. 5.1 Approved
- Thermal magnetic protection
- Trip characteristic based on 40°C ambient for UL/CSA
- Interrupting rating up to 14kA
- All ratings are HACR rated (SWD rated up to 20 A)
- Finger safe design (front)
- DIN rail mounting

❶ Rated 415V AC, 48V DC, IEC max/min meets IEC 60947-2 for miniature circuit breakers.
❷ 1-Pole 277V AC 0.5…32A, 240V AC 35…40A, 48V DC 0.5…40A
❸ 2-Pole (series) 96V DC 0.5...40A

RH Series Compact Power Relays

SPDT through 4PDT, 10A contacts
Compact power type relays

The RH series are miniature power relays with a large capacity. The RH relays feature 10A contact capacity as large as the RR series but in a miniature package. The compact size saves space.

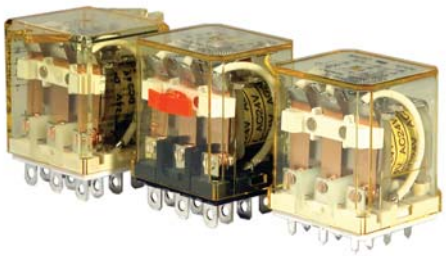

Part Number Selection

Contact	Model	Part Number: Blade Terminal	Part Number: PCB Terminal	Coil Voltage Code (Standard Stock in bold)
SPDT	Basic	RH1B-U	RH1V2-U	AC6V, AC12V, **AC24V**, AC110V, **AC120V**, AC220V, **AC240V** DC6V, **DC12V**, **DC24V**, DC48V, DC110V
	With Indicator	RH1B-UL	—	
	With Check Button	RH1B-UC	—	
	With Indicator and Check Button	RH1B-ULC	—	
	Top Bracket Mounting	RH1B-UT	—	
	With Diode (DC coil only)	RH1B-UD	RH1V2-UD	DC6V, **DC12V**, **DC24V**, DC48V, DC110V
	With Indicator and Diode (DC coil only)	RH1B-ULD	—	**DC12V**, **DC24V**, DC48V, DC110V
DPDT	Basic	RH2B-U	RH2V2-U	AC6V, AC12V, **AC24V**, **AC110-120V**, **AC220-240V** DC6V, **DC12V**, **DC24V**, DC48V, DC100-110V
	With Indicator	RH2B-UL	RH2V2-UL	
	With Check Button	RH2B-UC	—	
	With Indicator and Check Button	RH2B-ULC	—	
	Top Bracket Mounting	RH2B-UT	—	
	With Diode (DC coil only)	RH2B-UD	RH2V2-UD	DC6V, **DC12V**, **DC24V**, DC48V, DC100-110V
	With Indicator and Diode (DC coil only)	RH2B-ULD	—	
3PDT	Basic	RH3B-U	RH3V2-U	AC6V, AC12V, **AC24V**, AC110V, **AC120V**, AC220V, **AC240V** DC6V, **DC12V**, **DC24V**, DC48V, DC110V
	With Indicator	RH3B-UL	RH3V2-UL	
	With Check Button	RH3B-UC	—	
	With Indicator and Check Button	RH3B-ULC	—	
	Top Bracket Mounting	RH3B-UT	—	
	With Diode (DC coil only)	RH3B-D*	RH3V2-D*	DC6V, DC12V, DC24V, DC48V, DC110V
	With Indicator and Diode (DC coil only)	RH3B-LD*	—	
4PDT	Basic	RH4B-U	RH4V2-U	AC6V, AC12V, **AC24V**, AC110V, **AC120V**, AC220V, **AC240V** DC6V, **DC12V**, **DC24V**, DC48V, DC110V
	With Indicator	RH4B-UL	RH4V2-UL	
	With Check Button	RH4B-UC	—	
	With Indicator and Check Button	RH4B-ULC	—	
	Top Bracket Mounting	RH4B-UT	—	
	With Diode (DC coil only)	RH4B-UD	RH4V2-UD	DC6V, DC12V, DC24V, DC48V, DC110V
	With Indicator and Diode (DC coil only)	RH4B-LD*	—	

1. *Carries no UL recognition mark.
2. PCB terminal relays are designed to mount directly to a circuit board without any socket.

Ordering Information
When ordering, specify the Part No. and coil voltage code:
(example) **RH3B-U** **AC120V**
Part No. — Coil Voltage Code

Sockets (for Blade Terminal Models)

Relays	Standard DIN Rail Mount [1]	Finger-safe DIN Rail Mount [1]	Through Panel Mount	PCB Mount
RH1B	SH1B-05	SH1B-05C	SH1B-51	SH1B-62
RH2B	SH2B-05	SH2B-05C	SH2B-51	SH2B-62
RH3B	SH3B-05	SH3B-05C	SH3B-51	SH3B-62
RH4B	SH4B-05	SH4B-05C	SH4B-51	SH4B-62

1. DIN Rail mount socket comes with two horseshoe clips. Do not use unless you plan to insert pullover wire spring. Replacement horseshoe clip part number is Y778-011.

Hold Down Springs & Clips

Appearance	Description	Relay	For DIN Mount Socket	For Through Panel & PCB Mount Socket	Min Order Qty
	Pullover Wire Spring	RH1B	SY2S-02F1 [2]	SY4S-51F1	10
		RH2B	SY4S-02F1 [2]		
		RH3B	SH3B-05F1 [2]		
		RH4B	SH4B-02F1 [2]		
	Leaf Spring (side latch)	RH1B, RH2B, RH3B, RH4B	SFA-202 [3]	SFA-302 [3]	20
	Leaf Spring (top latch)	RH1B, RH2B, RH3B, RH4B	SFA-101 [3]	SFA-301 [3]	

2. Must use horseshoe clip when mounting in DIN mount socket. Replacement horseshoe clip part number is Y778-011.
3. Two required per relay.

AC Coil Ratings

Voltage (V)	Rated Current (mA) ±15% at 20°C								Coil Resistance (Ω) ±10% at 20°C				Operation Characteristics (against rated values at 20°C)		
	AC 50Hz				AC 60Hz										
	SPDT	DPDT	3PDT	4PDT	SPDT	DPDT	3PDT	4PDT	SPDT	DPDT	3PDT	4PDT	Max. Continuous Applied Voltage	Pickup Voltage	Dropout Voltage
6	170	240	330	387	150	200	280	330	330	9.4	6.4	5.4	110%	80% maximum	30% minimum
12	86	121	165	196	75	100	140	165	165	39.3	25.3	21.2			
24	42	60.5	81	98	37	50	70	83	83	153	103	84.5			
110	9.6	—	18.1	21.6	8.4	—	15.5	18.2	18.2	—	2,200	1,800			
110-120	—	9.4-10.8	—	—	—	8.0-9.2	—	—	—	—	—	—			
120	8.6	—	16.4	19.5	7.5	—	14.2	16.5	16.5	—	10,800	7,360			
220	4.7	—	8.8	10.7	4.1	—	7.7	9.1	9.1	—	10,800	7,360			
220-240	—	4.7-5.4	—	—	—	4.0-4.6	—		—	18,820	—	—			
240	4.9	—	8.2	9.8	4.3	—	7.1	8.3	8.3	—	12,100	9,120			

DC Coil Ratings

Voltage (V)	Rated Current (mA) ±15% at 20°C				Coil Resistance (Ω) ±10% at 20°C				Operation Characteristics (against rated values at 20°C)		
	SPDT	DPDT	3PDT	4PDT	SPDT	DPDT	3PDT	4PDT	Max. Continuous Applied Voltage	Pickup Voltage	Dropout Voltage
6	128	150	240	250	47	40	25	24	110%	80% maximum	10% minimum
12	64	75	120	125	188	160	100	96			
24	32	36.9	60	62	750	650	400	388			
48	18	18.5	30	31	2,660	2,600	1,600	1,550			
100-110	—	8.2-9.0	—	—	—	12,250	—	—			
110	8	—	12.8	15	13,800	—	8,600	7,340			

Standard coil voltages are in **BOLD**.

TWTD Series — Full Size NEMA Pushbuttons

TWTD Series: Heavy duty switches built to last

Key features include:

- Variety of button sizes up to 2 9/16" (65mm)
- Rugged construction includes chrome plated zinc locking ring die cast zinc mounting threads, screw mounted contact blocks
- LED or incandescent illumination
- Transformer or full voltage
- Transparent contact windows
- Slow make, double break self-cleaning contacts
- Modular construction for maximum flexibility
- Double nickel plated terminal screws
- Available assembled or as sub-components
- NEMA 4x and IP65 watertight/oiltight panel
- Large M3.5 screw terminals with captive sems plate

The rugged series of TWTD switches offers both variety and durability in an attractive design.

With button sizes up to 2 9/16" (65mm), chrome plated zinc locking rings, die cast zinc mounting threads, steel anti-rotation rings, and self cleaning contacts, the TWTDs are here to stay.

The TWTD series also offers either LED or incandescent illumination in full voltage and transformer models.

Transparent contact windows allow the viewing of IDEC's self cleaning slow-make/slow-break contacts.

Regardless of your switching needs, the TWTD series provides the kind of long lasting, industrial strength quality you've come to expect from IDEC.

UL Listed
File No. E70646

File No. LR48366

Ref No. 117617MC

Certificate No.
2005010305145658

Pilot Lights (Assembled)

Assembled Pilot Lights

A P D 1 126 D N – R – ( )

Function
P: Pilot Light

Series Designation
D: TWTD Series

Lens Shape
1: Dome

Rated Operational Voltage (Primary)

Transformer Type	Full Voltage Type
126: 120V AC	99: Full Voltage
246: 240V AC	
486: 480V AC	

Lamp Voltage
(full voltage illuminated units only)
6V: 6V AC/DC
12V: 12V AC/DC
24V: 24V AC/DC
120V: 120V AC (LED only)
240V: 240V AC (LED only)

Lens Color Code
A: Amber
G: Green
R: Red
S: Blue
W: White
Y: Yellow

Lamp Type
Blank: Incandescent
D: LED

Use only when interpreting part numbers. Do not use for developing part numbers.

LED and Incandescent Pilot Lights

Style	Operating Voltage	Part Number	
		LED	Incandescent
Transformer Dome	120V AC 240V AC 480V AC	APD1126DN-② APD1246DN-② APD1486DN-②	APD1126N-② APD1246N-② APD1486N-②
Full Voltage Dome	—	APD199DN-②-③	APD199N-②-③

1. In place of ②, specify the Lens/LED Color Code.
2. In place of ③, specify the Full Voltage Code (lamp voltage).
3. Yellow pilot light comes with white LED.

② Lens Color Codes

Color	Code
Amber	A
Green	G
Red	R
Blue	S
White	W
Yellow	Y

③ Full Voltage Codes

Voltage	Code
6V AC/DC	6V
12V AC/DC	12V
24V AC/DC	24V
120V AC	120V
240V AC	240V (LED only)

Non-Illuminated Pushbuttons (Assembled)

Non-Illuminated Pushbuttons

Style		Contacts	Momentary	Maintained
Flush		1NO 1NC 1NO-1NC 2NO 2NC	ABD110N-① ABD101N-① ABD111N-① ABD120N-① ABD102N-①	AOD110N-① AOD101N-① AOD111N-① AOD120N-① AOD102N-①
Extended		1NO 1NC 1NO-1NC 2NO 2NC	ABD210N-① ABD201N-① ABD211N-① ABD220N-① ABD202N-①	AOD210N-① AOD201N-① AOD211N-① AOD220N-① AOD202N-①
Extended with Neoprene Boot†		1NO 1NC 1NO-1NC 2NO 2NC	ABPD210N-① ABPD201N-① ABPD211N-① ABPD220N-① ABPD202N-①	AOPD210N-① AOPD201N-① AOPD211N-① AOPD220N-① AOPD202N-①
Recessed		1NO 1NC 1NO-1NC 2NO 2NC	ABFD110N-① ABFD101N-① ABFD111N-① ABFD120N-① ABFD102N-①	AOFD110N-① AOFD101N-① AOFD111N-① AOFD120N-① AOFD102N-①
Extended with Full Shroud		1NO 1NC 1NO-1NC 2NO 2NC	ABFD210N-① ABFD201N-① ABFD211N-① ABFD220N-① ABFD202N-①	AOFD210N-① AOFD201N-① AOFD211N-① AOFD220N-① AOFD202N-①
ø 40mm Mushroom Head		1NO 1NC 1NO-1NC 2NO 2NC	ABD310N-① ABD301N-① ABD311N-① ABD320N-① ABD302N-①	AOD310N-① AOD301N-① AOD311N-① AOD320N-① AOD302N-①
ø 40mm Mushroom Head with Full Shroud		1NO 1NC 1NO-1NC 2NO 2NC	ABGD310N-① ABGD301N-① ABGD311N-① ABGD320N-① ABGD302N-①	AOGD310N-① AOGD301N-① AOGD311N-① AOGD320N-① AOGD302N-①
ø 65mm Jumbo Mushroom Head		1NO 1NC 1NO-1NC 2NO 2NC	ABD410N-① ABD401N-① ABD411N-① ABD420N-① ABD402N-①	AOD410N-① AOD401N-① AOD411N-① AOD420N-① AOD402N-①
ø 65mm Jumbo Mushroom Head with Shallow Shroud		1NO 1NC 1NO-1NC 2NO 2NC	ABGD410N-① ABGD401N-① ABGD411N-① ABGD420N-① ABGD402N-①	AOGD410N-① AOGD401N-① AOGD411N-① AOGD420N-① AOGD402N-①
ø 65mm Jumbo Mushroom Head With Deep Shroud		1NO 1NC 1NO-1NC 2NO 2NC	ABFD410N-① ABFD401N-① ABFD411N-① ABFD420N-① ABFD402N-①	AOFD410N-① AOFD401N-① AOFD411N-① AOFD420N-① AOFD402N-①

1. In place of ①, specify the Button Color Code.
2. For sub-assembly part numbers, see next page.
3. For accessories, see page 632.
4. †Neoprene boot available only in Black (B), Green (G), Red (R) and Yellow (Y).

① Button Color Codes

Color	Code
Black	B
Green	G
Red	R
Blue	S
Yellow	Y
White	W

1. 65mm Jumbo mushroom not available in white.
2. Neoprene boot is not available in blue or white.

E-Stops (Assembled)

E-Stop Switches

Style		Contacts	Part Number
ø 40mm Pushlock Turn Reset	Non-Illuminated	1NO 1NC 1NO-1NC 2NO 2NC	AVD310N-R* AVD301N-R* AVD311N-R* AVD320N-R* AVD302N-R*
ø 40mm Illuminated Pushlock Turn Reset	Full Voltage	1NO-1NC 2NO 2NC	AVLD39911⑤N-R-③* AVLD39920⑤N-R-③* AVLD39902⑤N-R-③*
	Transformer	1NO-1NC 2NO 2NC	AVLD3 ④ 11⑤N-R* AVLD3 ④ 20⑤N-R* AVLD3 ④ 02⑤N-R*
ø 40mm Push-Pull	Non-Illuminated	1NO 1NC 1NO-1NC 2NO 2NC	AYD310N-① AYD301N-① AYD311N-① AYD320N-① AYD302N-①
ø 40mm Push-Pull	Full Voltage	1NO-1NC 2NO 2NC	AYLD39911⑤N-②-③ ** AYLD39920⑤N-②-③ ** AYLD39902⑤N-②-③ **
	Transformer	1NO-1NC 2NO 2NC	AYLD3 ④ 11⑤N-② ** AYLD3 ④ 20⑤N-② ** AYLD3 ④ 02⑤N-②**
ø 40mm Momentary Push-Pull (3-position)	Full Voltage	1NO-1NC 1NC-1LB†	AYLD229911⑤N-②-③ -TK962 AYLD229902S⑤N-②-③-TK962
	Transformer	1NO-1NC 1NC-1LB†	AYLD22 ④ 11⑤N-②-TK962 AYLD22 ④ 02S⑤N-②-TK962

Unibody E-Stops

Style		Contacts	Part Number
ø 40mm Pushlock Turn Reset (available in Red only)		1NO-1NC 2NC	HN1E-BV4F11-R* HN1E-BV4F02-R*
Illuminated ø 40mm Pushlock Turn Reset (available in Red only)		1NO-1NC 2NC	HN1E-LV4F11Q⑤-R-③ HN1E-LV4F02Q⑤-R-③

1. In place of ①, specify the button color code
2. In place of ②, specify the lens color code.
3. In place of ③, specify the Full Voltage (lamp voltage) Code.
4. In place of ④, specify the transformer voltage code.
5. In place of ⑤, specify the Lamp Type code.
6. With single unit construction, the positive action contacts are integrated in the body of the switch. This provides an extra degree of safety and reliability for critical emergency stop functions.
7. HN1E series E-stops comply with EN418, the IEC "E-Stop Addendum to the Low Voltage Directive," this includes "tamper proof" operation whereby a change of contact state is not possible by "teasing" or "floating" the operator.
8. 3 position push-pull available in spring return to center only.
9. *Available in red only.
10. **Not available in blue.
11. †The most common configuration for motor starting applications.
12. For sub-assembly part numbers, see next page.
13. For nameplates and accessories, see page 634 and 632.
14. For dimensions, see page 637.

3 Position Push-Pull†

Contact	Push	Center	Pull
NC (BST-001)	O	O	X
NC-LB (BST-001S)	O	X	X
NO (BST-010)	X	O	O
NO-EM (BST-010S)	X	X	O

① Button Color Codes

Color	Code
Black	B
Green	G
Red	R
Blue	S
Yellow	Y

② LED/Lens Color Codes

Color	Code
Amber	A
Green	G
Red	R
Blue	S
White	W

③ Full Voltage Codes

Voltage	Code
6V AC/DC	6V
12V AC/DC	12V
24V AC/DC	24V
120V AC	120V
240V AC	240V (LED only)

④ Transformer Voltage Codes

Voltage	Code
120VAC	126
240VAC	246
480VAC	486

Transformers step down to 6V.

⑤ Lamp Type Codes

Lamp	Code
Incandescent	Blank
LED	D

Non-Illuminated Selector Switches (Assembled)

Non-Illuminated 2-Position Selector Switches

Style					Part Number		
Contact	Mounting	Operator Position L	Operator Position R		Maintained	Spring Return from Right	Spring Return from Left
					L R	L R	L R
1NO	1 2	O O	X O	Knob Lever Key	ASD210N ASD2L10N ASD2K10N	ASD2110N ASD21L10N ASD21K10N	ASD2210N ASD22L10N ASD22K10N
1NC	1 2	X O	O O	Knob Lever Key	ASD201N-116 ASD2L01N-116 ASD2K01N-116	ASD2101N-116 ASD21L01N-116 ASD21K01N-116	ASD2201N-116 ASD22L01N-116 ASD22K01N-116
1NO 1NC	1 2	X O	O X	Knob Lever Key	ASD211N ASD2L11N ASD2K11N	ASD2111N ASD21L11N ASD21K11N	ASD2211N ASD22L11N ASD22K11N
2NO	1 2	O O	X X	Knob Lever Key	ASD220N ASD2L20N ASD2K20N	ASD2120N ASD21L20N ASD21K20N	ASD2220N ASD22L20N ASD22K20N
2NC	1 2	X X	O O	Knob Lever Key	ASD202N-104 ASD2L02N-104 ASD2K02N-104	ASD2102N-104 ASD21L02N-104 ASD21K02N-104	ASD2202N-104 ASD22L02N-104 ASD22K02N-104
2NO 2NC	1 2 3 4	O X O X	X O X O	Knob Lever Key	ASD222N ASD2L22N ASD2K22N	ASD2122N ASD21L22N ASD21K22N	ASD2222N ASD22L22N ASD22K22N
2NO 2NC	1 2 3 4	O O X X	X X O O	Knob Lever Key	ASD222N-111 ASD2L22N-111 ASD2K22N-111	ASD2122N-111 ASD21L22N-111 ASD21K22N-111	ASD2222N-111 ASD22L22N-111 ASD22K22N-111

1. The truth table indicates the operating position of contact block when the operator is switched to that position.
   X = On (closed contacts) O = Off (open contacts)
   X—X = Overlapping Contacts: Remain on (closed contacts) when switch is moved between these two positions.
2. All knob and lever selector switches come in black. Other colors are available by ordering the knob or lever separately.
3. Custom contact arrangements available, see page 629 or call IDEC for details.

Non-Illuminated 3-Position Selector Switches

Style						Part Number			
Contact	Mounting	Operator Position L	Operator Position C	Operator Position R		Maintained	Spring Return from Right	Spring Return from Left	Spring Return Two-Way
						L C R	L C R	L C R	L C R
2NO	1 2	X O	O O	O X	Knob Lever Key	ASD320N ASD3L20N ASD3K20N	ASD3120N ASD31L20N ASD31K20N	ASD3220N ASD32L20N ASD32K20N	ASD3320N ASD33L20N ASD33K20N
2NC	1 2	O X	X—X X—X	X O	Knob Lever Key	ASD302N ASD3L02N ASD3K02N	ASD3102N ASD31L02N ASD31K02N	ASD3202N ASD32L02N ASD32K02N	ASD3302N ASD33L02N ASD33K02N
2NO 2NC	1 2 3 4	X O O X	O O X—X	O X X O	Knob Lever Key	ASD322N ASD3L22N ASD3K22N	ASD3122N ASD31L22N ASD31K22N	ASD3222N ASD32L22N ASD32K22N	ASD3322N ASD33L22N ASD33K22N
2NO 2NC	1 2 3 4	X X—X O O	O X O	X O O X	Knob Lever Key	ASD322N-309 ASD3L22N-309 ASD3K22N-309	ASD3122N-309 ASD31L22N-309 ASD31K22N-309	ASD3222N-309 ASD32L22N-309 ASD32K22N-309	ASD3322N-309 ASD33L22N-309 ASD33K22N-309
2NO 2NC	1 2 3 4	O O O O	X O X O	O X O X	Knob Lever Key	ASD322N-310 ASD3L22N-310 ASD3K22N-310	ASD3122N-310 ASD31L22N-310 ASD31K22N-310	ASD3222N-310 ASD32L22N-310 ASD32K22N-310	ASD3322N-310 ASD33L22N-310 ASD33K22N-310
4NO	1 2 3 4	X O X O	O O O O	O X O X	Knob Lever Key	ASD340N ASD3L40N ASD3K40N	ASD3140N ASD31L40N ASD31K40N	ASD3240N ASD32L40N ASD32K40N	ASD3340N ASD33L40N ASD33K40N
4NC	1 2 3 4	O X—X O X—X	X—X X—X X—X	X O X O	Knob Lever Key	ASD304N ASD3L04N ASD3K04N	ASD3104N ASD31L04N ASD31K04N	ASD3204N ASD32L04N ASD32K04N	ASD3304N ASD33L04N ASD33K04N

Technical Data

POWER SUPPLY	Terminals 14, 15
Nominal voltage	115 VAC ± 10%
Power Consumption	1.3 W
INPUT 1, 2 (intrinsically safe)	Terminals 1+, 2+, 3-; 4+, 5+, 6-
Nominal Data	≈ 8 VDC/≈ 8 mA
Input pulse length/interval	≥ 20 ms/≥ 20 ms
Lead Breakage (LB) Monitoring	Breakage I ≤ 0.1 mA, short-circuit I > 6 mA
OUTPUT (not intrinsically safe)	
Output 1 (SPDT contacts)	Terminals 7, 8, 9
Output 2 (SPDT contacts)	Terminals 10, 11, 12
Contact load	253 VAC/2 A/cos ø > 0.7; 126.5 VAC/4 A/cos ø > 0.7; 40 VDC/2 A resistive load
Mechanical life	10^7 switching cycles
Energizing/de-energizing delay	≈ 20 ms/≈ 20 ms
TRANSFER CHARACTERISTICS	
Switching Frequency	< 10 Hz
CERTIFICATES	See page 127 for entity parameters
CE	
c UL us	No. 116-0145
FM	No. 116-0035
CSA	No. 116-0047
Ex Zone 0, 1, 2	PTB 00 ATEX 2081, Ex II (1) G D [EEx ia] IIC
Exida	P+F 02/4-12 R007
MECHANICAL	
Housing	Type C see page 454
Dimensions	4.65" x 0.79" x 4.53" (118 x 20 x 115 mm)
Weight	5.3 oz. (≈ 150 g)
AMBIENT TEMPERATURE	-4°F to +140°F (-20°C to +60°C)

Engineer's Guide *(page 7)*
Accessories *(page 443)*
Surge Suppression *(page 413)*
Latest Info. Avail. Online

2-Channel with Relay Output

Model Number

KFA5-SR2-Ex2.W

- **2-channel**
- **120 VAC supply**
- **1 signal output with 1 form C relay per channel**
- **Optional lead breakage (LB) and short circuit (SC) monitoring**
- **Suitable for Division 2 mounting**
- **SIL 2 according to IEC 61508; SIL 3 in a redundant structure**

This device is a dual channel, galvanically isolated intrinsic safety barrier with a built-in amplifier that transfers discrete signals (NAMUR sensors/mechanical contacts) from a hazardous area to a safe area. Each proximity sensor or switch controls a form C relay contact for the safe area load.The barrier output changes state when the input signal changes state. The normal output state can be reversed through the mode of operation switches S1 and S2.

For a mechanical contact, LB monitoring can be selected by placing a 10 kΩ resistor across the mechanical contact in the field and moving switch S3 to position I on the barrier. SC monitoring is added by placing a 400Ω-2 kΩ resistor in series with the mechanical contact. NAMUR proximity sensors, however, are designed with the LB and SC functions, making external resistors unnecessary. In case of a LB/SC fault, the signal output relay reverts to the deenergized state. LB/SC monitoring can be disabled with S3 in position II.

Connection Diagram

Class I; Div 1, 2
Zone 0, 1, 2

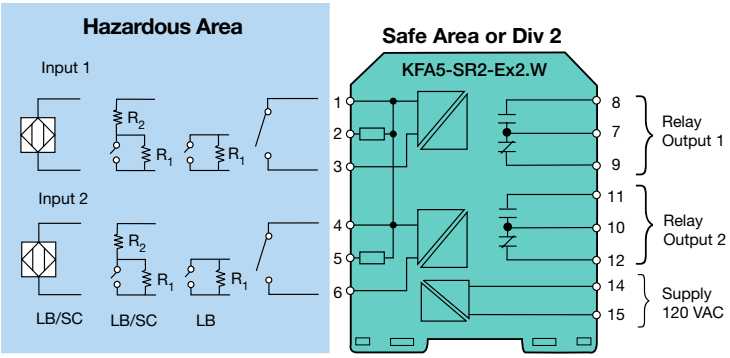

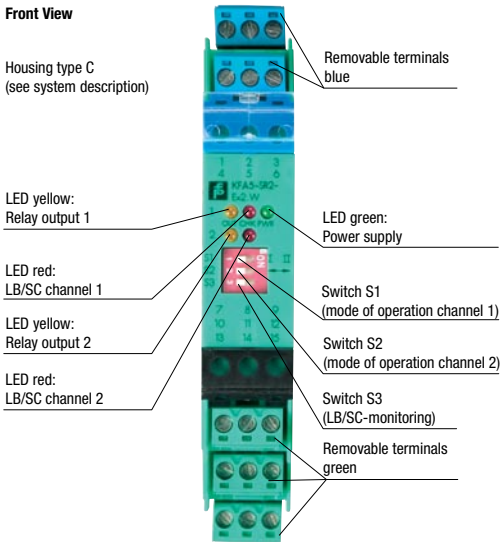

1.4.6 CPU 315-2 DP

DP master or DP slave

You can operate the CPU 315-2 DP on your 2nd interface (PROFIBUS-DP interface) as DP Master or DP Slave in a PROFIBUS-DP network.

For details on PROFIBUS-DP characteristics of CPU 315-2 DP refer to Chapter 2.

CPU 315-2 DP, Technical Data

CPU and Product Version	
MLFB	6ES7 315-2AF03-0AB0
• Hardware version	01
• Firmware version	V 1.1.0
• Matching programming package	*STEP 7* V 5.0; Service Pack 03
Memory	
Work memory	
• integral	64 KB
• Expandable	no
Load memory	
• integral	96 KB RAM
• Expandable FEPROM	Up to 4 MB
• Expandable RAM	no
Backup	Yes
• With battery	All data
• Without battery	4736 bytes
Processing times	
Processing times for	
• Bit instructions	0.3 µs minimum
• Word instructions	1 µs minimum
• Double integer math	2 µs minimum
• Floating-point math instructions	50 µs minimum
Timers/Counters and their retentive characteristics	
S7 counters	64
• Adjustable retentivity	from C 0 to C 63
• Preset	from C 0 to C 7
• Counting range	0 to 999
IEC Counters	Yes
• Type	SFB

S7 timers	128
• Adjustable retentivity	from T 0 to T 127
• Preset	No retentive times
• Timing range	10 ms to 9990 s
IEC Timers	Yes
• Type	SFB
Data areas and their retentive characteristics	
Retentive data area as a whole (inc. flags, timers, counters)	4736 bytes
Bit memories	2048
• Adjustable retentivity	MB 0 to MB 255
• Preset	MB 0 to MB 15
Clock memories	8 (1 memory byte)
Data blocks	max. 255 (DB 0 reserved)
• Size	max. 16 KB
• Adjustable retentivity	8 DB; max. 4096 data bytes
• Preset	No retentivity
Local data (non-alterable)	max. 1536 bytes
• Per priority class	256 bytes
Blocks	
OBs	See Instruction List
• Size	max. 16 KB
Nesting depth	
• Per priority class	8
• additional levels within an error OB	4
FBs	max. 192
• Size	max. 16 KB
FCs	max. 192
• Size	max. 16 KB

Address areas (I/O)	
Peripheral address area, digital/analog	1 KB/1 KB (freely addressable)of these are
• distributed	1 KB/1 KB
Process image (cannot be customized)	128/128 bytes
Digital channels	max. 8192 (minus 1 byte diagnostic address per DP slave)/8192
• Centralized	max. 1024/1024
Analog channels	max. 512 (minus 1 byte diagnostic address per DP slave)/512
• Centralized	max. 256/128
Configuration	
Rack	max. 4
Modules per module rack	max. 8
Number of DP masters	
• integral	1
• via CP	1
S7 message functions	
Simultaneously active Alarm-S blocks	max. 50
Time	
Real-time clock	Yes
• Backed-up	Yes
• Accuracy	See Section 1.1.6
Operating hours counter	1
• Number	0
• Value range	0 to 32767 hours
• Selectivity	1 hour
• Retentive	Yes
Clock synchronisation	Yes
• On PLC	Master
• CP on MPI	Master/Slave
Testing and commissioning functions	
Status/Modify Variables	Yes
• Variable	Inputs, outputs, flags, DBs, timers, counters
• Number	
– Monitor Variables	max. 30
– Modify Variables	max. 14
Force	Yes
• Variable	Inputs, outputs
• Number	max. 10
Monitor block	Yes

Single sequence	Yes
Breakpoint	2
Diagnostic buffer	Yes
• Number of entries (non-alterable)	100
Communication functions	
PD/OP communication	Yes
Global data communication	Yes
• Number of GD packets	
– Sender	1
– Receiver	1
• Size of GD packets	max. 22 bytes
– Number of which consistent	8 bytes
S7 basic communication	Yes (server)
• User data per job	max. 76 bytes
– Number of which consistent	32 bytes for X/I_PUT/_GET; 76 bytes for X_SEND/_RCV
S7 communication	Yes
• User data per job	max. 160 bytes
– Number of which consistent	32 bytes
S7-compatible communication	Yes (via CP and loadable FC)
• User data per job	Dependent on CP
– Number of which consistent	Dependent on CP
Standard communication	Yes (via CP and loadable FC)
• User data per job	Dependent on CP
– Number of which consistent	Dependent on CP
Number of connection resources	12 for PD/OP/S7 basic/S7 communication
• Reservation for	
– PD communication User-definable Default	max. 11 from 1 to 11 1
– OP communication User-definable Default	max. 11 from 1 to 11 1
– S7 basic communication User-definable Default	max. 8 from 0 to 8 8
Routing connections	max. 4

Interfaces	
1. Interface	
Functionality	
• MPI	Yes
• DP Master	No
• DP Slave	No
• Galvanically isolated	No
MPI	
• Services	
– PD/OP communication	Yes
– Global data communication	Yes
– S7 basic communication	Yes
– S7 communication	Yes (server)
• Transmission rates	19.2; 187.5 Kbps
2. Interface	
Functionality	
• DP Master	Yes
• DP Slave	Yes
– Status/Modify; Program; Routing	Yes, can be activated
• Direct data exchange	Yes
• Point-to-point connection	No
• Default setting	None
• Galvanically isolated	Yes
DP Master	
• Services	
– Equidistance	Yes
– SYNC/FREEZE	Yes
– Activation/deactivation of DP slaves	Yes
• Transmission rates	Up to 12 Mbps
• Number of DP slaves	max. 64
• Address area	max. 1 KB I/1 Kbyte O
• User data per DP slave	max. 244 bytes I and 244 bytes O

DP Slave	
• Services	
– Status/Modify; Program via PROFIBUS Routing	Yes, can be activated
• Device master file	Sie3802f.gsg
• Transmission rate	... up to 12 Mbps
• Transfer memory	244 bytes I/244 bytes O
– Address areas	max. 32 with max. 32 bytes each
Dimensions	
Assembly dimension B × H × T mm (mm)	80 × 125 × 130
Weight	Approx. 0.53 kg
Programming	
Programming language	STEP 7
Stored instructions	See Instruction List
Nesting levels	8
System functions (SFCs)	See Instruction List
System function blocks (SFBs)	See Instruction List
User program security	Password protection
Voltages, Currents	
Power supply	24V DC
• Permissible range	20.4 to 28.8 V
Current consumption (idle)	typical 0.9 A
Inrush current	typical 8A
I^2t	0.4 A^2s
External fusing for supply lines (recommendation)	Circuit breaker; 2 A, Type B or C
PD supply at MPI (15 to 30V DC)	max. 200 mA
Power losses	typical 10 W
Battery	Yes
• Backup margin at 25° C and continuous CPU buffering	min. 1 year
• Battery shelf life at 25°C	approx. 5 years
Accumulator	Yes
– at 0 to 25°C	Approx. 4 weeks
– at 40° C	Approx. 3 weeks
– at 60 ° C	Approx. 1 week
• Battery charging time	Approx. 1 hour

Table 3- 3 Digital input modules (continued)

Properties	Module				
	SM 321; DI 16 x DC48-125V (-1CH20-)	SM 321; DI 16 x AC120/230 V (-1FH00-)	SM 321; DI 16 x NAMUR (-7TH00-) *	SM 321; DI 8 x AC 120/230V (-1FF01-)	SM 321; DI 8 x AC 120/230 V ISOL (-1FF10-)
Number of inputs	16 DI; isolated in groups of 4	16 DI; isolated in groups of 4	16 DI; isolated in groups of 2	8 DI; isolated in groups of 2	8 DI; isolated in groups of 1
Rated input voltage	120/230 VAC	120/230 VAC	24 VDC	120/230 VAC	120/230 VAC
Suitable for...	Switches; 2-wire, 3-wire and 4-wire proximity switches (BEROs)	Switches; 2-wire / 3-wire AC proximity switches	NAMUR encoder	Switches; 2-wire / 3-wire AC proximity switches	
Supports isochronous mode	No	No	No	No	No
Programmable diagnostics	No	No	No	No	No
Diagnostic interrupt		No			
Edge-triggered hardware interrupt	No	No	No	No	No
Adjustable input delays	No	No	No	No	No
Special features		-	-	-	-

* This module is described in the ET 200M Signal Modules for Process Automation manual. You can find the manual on the Internet (http://support.automation.siemens.com/WW/view/en/7215812).

3.1.2 Digital output modules

Overview of properties

The table below shows the essential properties of the digital output modules

Table 3- 4 Digital output modules

Properties	Module				
	SM 322; DO 64 x DC24V/0.3A Sourcing (-1BP00-)	SM 322; DO 64 x DC 24V/0.3A Sinking (-1BP50-)	SM 322; DO 32 x DC24V/0.5A (-1BL00-)	SM 322; DO 32 x AC120/230V/1A (-1FL00-)	SM 322; DO 16 x DC24V/0.5A (-1BH01-)
Number of outputs	64 DO; isolated in groups of 16	64 DO; isolated in groups of 16	32 DO; isolated in groups of 8	32 DO; isolated in groups of 8	16 DO; isolated in groups of 8
Output current	3 A	3 A	0.5 A	1.0 A	0.5 A
Rated load voltage	24 VDC	24 VDC	24 VDC	24 VDC	24 VDC
Suitable for...	solenoid valves, DC contactors and signal lamps				
Supports isochronous mode	no	no	No	No	No
Programmable diagnostics	No	No	No	No	no
Diagnostic interrupt	No	No	No	No	No
Substitute value output	No	No	No	No	No
Special features	-				

Table 3- 5 Digital output modules (continued)

Properties	Module				
	SM 322; DO 16 x DC24V/0.5A High Speed (-1BH10-)	SM 322; DO 16 x UC24/48 V (-5GH00-)	SM 322; DO 16 x AC120/230V/1A (-1FH00-)	SM 322; DO 16 x DC24V/0.5A (-8BH00-)* (-8BH01-) *	SM 322; DO 8 x DC24V/2A (-1BF01-)
Number of outputs	16 DO; isolated in groups of 8	16 DO; isolated in groups of 1	16 DO; isolated in groups of 8	16 DO; isolated in groups of 4	8 DO; isolated in groups of 4
Output current	0.5 A	0.5 A	1 A	0.5 A	2 A
Rated load voltage	24 VDC	24 VDC to 48 VDC 24 VAC to 48 VAC	120/230 VAC	24 VDC	24 VDC
Suitable for...	solenoid valves, DC contactors and signal lamps				
Supports isochronous mode	Yes	no	no	no	no
Programmable diagnostics	No	Yes	no	yes	no
Diagnostic interrupt	no	Yes	No	Yes	No
Substitute value output				Yes	No
Special features	-	-	-	Redundant load control is supported	-

	Module				
Hardware interrupt when limit exceeded	programmable	programmable	programmable	no	Programmable
Hardware interrupt at end of cycle	no	yes	no	No	no
Potential ratios	electrically isolated from: • The backplane bus interface	electrically isolated from: • The backplane bus interface	electrically isolated from: • The backplane bus interface • The load voltage (not for 2-DMU)	electrically isolated from: • The backplane bus interface	electrically isolated from: • the CPU • The load voltage (not for 2-DMU)
maximum potential difference between inputs (ICM)	50 VDC	60 VDC	11 VDC	2.0 VDC	≤ DC 2.3 V
Special features	-	-	-	Motor protection with PTC and silicone temperature sensors	-
Z sign 2-DMU = 2-wire transducer					

Table 6- 2 Analog input modules (continued)

Properties	Module				
	SM 331; AI 2 x 12 bits (-7KB02-)	SM 331; AI 6 x TC (-7PE10-)	SM 331; AI 8 x TC (-7PF11-)	SM 331; AI 8 x thermoresistor (-7PF01-)	SM 331; AI 8 x 0/4...20 mA HART (-7TF00-)*
Number of inputs	2 inputs in 1 channel group	6 inputs in 1 channel group	8 inputs in 4 channel groups	8 inputs in 4 channel groups	8 inputs in 1 channel group
Resolution	programmable for each channel group: • 9 bits+sign • 12 bits+sign • 14 bits+sign	Programmable for each channel group: • 15 bits+sign	Programmable for each channel group: • 15 bits+sign	Programmable for each channel group: • 15 bits+sign	programmable for each channel group: 15 bits+sign
Measurement type	programmable for each channel group: • Voltage • Current • Resistance • Temperature	Programmable for each channel group: • Voltage • Temperature	programmable for each channel group: • Temperature	programmable for each channel group: • Resistance • Temperature	Programmable for each channel group: • Voltage • Current • Resistance • Temperature
Measuring range selection	any, per channel group	any, per channel group	any, per channel group	any, per channel group	any, per channel group

	Module				
Supports isochronous mode	Yes	No	Yes	Yes	Yes
Programmable diagnostics	No	Yes	No	No	no
Diagnostic interrupt	programmable	Programmable	Programmable	Programmable	Programmable
Limit value monitoring	programmable for 1 channel	Programmable for 6 channels	programmable for 8 channels	programmable for 8 channels	programmable for 8 channels
Hardware interrupt when limit exceeded	Programmable	Programmable	Programmable	Programmable	programmable
Hardware interrupt at end of cycle	no	No	Programmable	Programmable	No
Potential ratios	electrically isolated from: • the CPU • The load voltage (not for 2-DMU)	electrically isolated from: • the CPU	electrically isolated from: • of the CPU	electrically isolated from: • the CPU	electrically isolated from: • the CPU • The load voltage (not for 2-DMU)
maximum potential difference between inputs (ICM)	≤ DC 2.3 V	250 VAC	60 VAC/75 VDC	60 VAC/75 VDC	60 VAC/75 VDC
Special features	-	Calibration	-	-	-
Z sign 2-DMU = 2-wire transducer					

* This module is described in the Distributed I/O Device ET 200M HART Analog Modules manual. You can find the manual on the Internet (http://support.automation.siemens.com/WW/view/en/22063748).

Features & Part Numbers

Key features of the PS5R Slim Line series include:

- Lightweight and Compact in size
- Wide Power Range: 30W – 240W
- Universal Input:
  30W to 90W:85-264V AC/100-370V DC
  120W and 240W:85-264V AC/100-350V DC
- Power Factor Correction (EN61000-3-2) for 60W to 240W
- Meets SEMI F47 Sag Immunity (120W & 240W)
- NEC Class 2 rated (30W & 60W)
- Approved for Class 1, Div. 2 Hazardous Locations
- Fused input
- Overcurrent protection, auto-reset
- Overvoltage protection, shut down
- Spring-up Screw Terminal type, IP20
- DIN rail or Panel Surface Mount
- Approvals:
  CE Marked
  TÜV
  c-UL, UL 508
  UL 1310 (PS5R-SC, -SD)
  UL 1604
  EN 50178:1997
  LVD: EN60950:2000
  EMC: Directive EN61204-3:2000
  (EMI: Class B, EMS: Industrial)

File # E234997

(SEMI F47 120W & 240W only)

Part Numbers

Part Number	Item	Watts	Rated Voltage	Rated Current
PS5R-SC12		30	12V DC	2.5A
PS5R-SC24			24V DC	1.3A
PS5R-SD24		60	24V DC	2.5A
PS5R-SE24		90	24V DC	3.75A
PS5R-SF24		120	24V DC	5A
PS5R-SG24		240	24V DC	10A

L

Power Supplies

Specifications

Part Numbers	12VDC output		PS5R-SC12	–	–	–	–
	24VDC output		PS5R-SC24	PS5R-SD24	PS5R-SE24	PS5R-SF24	PS5R-SG24
Output Capacity			30W	60W	90W	120W	240W
Input	Input Voltage (single-phase, 2-wire)		85 to 264 VAC, 100 to 370 VDC			85 to 264V AC, 100 to 350V DC	
	Input Current (typical)	100VAC	0.9A	1.7A	2.3A	1.8A	3.5A
		200VAC	0.6A	1.0A	1.4A	1.0A	1.7A
	Internal Fuse Rating		3.15A	3.15A	4A	4A	6.3A
	Inrush Current (cold start)		50A maximum (at 200V AC)				
	Leakage Current (at no load)		0.75mA maximum			1mA maximum	
	Typical Efficiency	12VDC	78%	–	–	–	–
		24VDC	80%	83%	82%	84%	
Output	Output Current Ratings	12VDC	2.5A	–	–	–	–
		24VDC	1.3A	2.5A	3.75A	5A	10A
	Voltage Adjustment		±10% (V. ADJ control on front)				
	Output Holding Time		20ms minimum (at rated input and output)				
	Starting Time		–	–	–	650ms maximum	500ms maximum
	Rise Time		100ms maximum (at rated input and output)			200ms maximum	
	Line Regulation		0.4% maximum				
	Load Regulation		1.5% maximum				0.8% max
	Temperature Regulation		0.05% degree C maximum				
	Ripple Voltage		2% peak to peak maximum (including noise)			1% peak to peak maximum (including noise)	
	Overcurrent Protection		105% or more, auto reset		103 to 110%, auto reset	105 to 130%, auto reset	
	Overvoltage Protection		120% min. SHUTDOWN				
Parallel Operation			No	No	No	No	No
Dielectric Strength			Between Input and Ground: 2000 VAC, 1 minute*				
Insulation Resistance			Between Input & Output Terminals: 100 MΩ Min				
Operating Temperature			-10 to 60°C (14 to 140°F)				
Storage Temperature			-25 to 75°C (-13 to +167°F)				
Operating Humidity			20 to 90% relative humidity (no condensation, no freezing)				
Vibration Resistance			Frequency 10 to 55Hz, Amplitude 0.375mm				
Shock Resistance			300m/s^2 3 times each in 6 axes				
Approvals			EMC: EN61204-3 (EMI: Class B, EMS: Industrial), LVD: EN60950, EN50178:1997, UL 1604, UL 508, UL1310 (PS5R-SC, -SD), c-UL (CSA 22.2 No. 14)				
			–			SEMI F47	
Harmonic Directive (EN61000-3-2)			N/A		EN61000-3-2 A14 class A		
Weight (approx.)			250g	285g	440g	630g	1000g
Terminal Screw			M3.5 slotted-Phillips head screw (screw terminal type)				
IP protection			IP20 fingersafe				
Dimensions H x W x D (mm)			95 x 36 x 108		115 x 46 x 121	115 x 50 x 129	125 x 80 x 149.5
Dimensions H x W x D (inches)			3.74 x 1.42 x 4.25		4.53 x 1.81 x 4.76	4.53 x 1.97 x 5.08	4.92 x 3.15 x 5.89

1. *For dimensional drawings, see page L-7.*
2. **Between input and output: 3000VAC, 1 minute; Between output and ground: 500VAC, 1 minute*

Anti-Condensation Heater

Models: AHC-15W, AHC-30W, AHC-35W, AHC-50W

The "AHC" touch safe series anti-condensation space heater is designed to keep the temperature inside of an enclosure several degrees above the external ambient temperature and above the dew point. Keep your electrical equipment on line by preventing corrosion due to condensation. Contact our engineering department for specifications for the proper AHC model used in other types of enclosures (Aluminum, Fiberglass, etc.).

Features

- There are no moving parts
- No thermostat to set or malfunction
- No adjustments are needed for ambient temperature changes
- Easy to install (connect two wires and insert two mounting screws)
- Compact size
- UL Recognized (E121431)
- Due to heat sink design, the max external surface temperature are "Touch Safe"

Technical Specifications

- Operating temperatures: -30˚C to 60˚C
- Watts: 15, 30, 35 or 50 per unit, depending on model
- Extruded black anodized aluminum
- Life expectancy-20 years
  Rated 120 VAC, output will vary with
- AC or DC voltage
- When possible, two smaller units are more efficient than one larger unit

8725 Youngerman Court, Ste 206, Jacksonville, FL 32244 ■ 888-875-2221 ph (904)778-2444 fax ■ Website:www.ingramproducts.com ■ e-mail: info@ingramproducts.com

Filter Fan Collection

SF10 162 CFM (275 m³/hr.) Side-Mount Filter Fan

Industry Standards

UL/cUL recognized; File no. 235470

CE, CSA (fan motor only)
Type 12, IP54 standard
Type 12, IP55 optional

Features

- Free airflow up to 162 CFM (275 m³/hr.)
- Approximate size 10 in. (250 mm)
- Click-fit design quickly installs into enclosure wall; no tools or screws required
- Enclosure side wall mounting
- Standard foam-in-place gasket
- Similar cut-out sizes as other filter fan manufacturers
- Terminal wire connections
- Simple snap-open grille for easy filter replacement

Finish

- RAL 7035 light-gray UV-resistant plastic standard
- RAL 9011 black UV-resistant plastic optional

Notes

Visit www.McLeanCoolingTech.com to download 2D and 3D CAD drawings into the overall design of your electronic system.

© 2011 Pentair Technical Products

Filter Fan Collection

Performance Data **SF10 162 CFM (275 M³/Hr.) Side-Mount Filter Fan**

ELECTRICAL DATA				
Rated Voltage	**115**	**230**	**24**	**48**
Frequency (Hz)	50 / 60	50 / 60	—	—
Nominal Current Maximum (Amps)	.53 / .50	.30 / .25	0.66	0.33
Power Consumption Maximum (Watts)	43 / 40	45 / 39	16	16
Power Connection	Terminal Block			
TYPE 12 / IP54 FILTER FANS				
RAL 7035 Light Gray:				
Item	20035	20037	20031	20033
Model	**SF1016414**	**SF1026414**	**SF1024414**	**SF1048414**
RAL 9011 Black:				
Item	20036	20038	20032	20034
Model	**SF1016413**	**SF1026413**	**SF1024413**	**SF1048413**
Free Airflow (CFM / m³/hr.)	162 / 275	162 / 275	162 / 275	162 / 275
Airflow with 1 Exhaust Grille (CFM / m³/hr.)	133 / 226	133 / 226	133 / 226	133 / 226
Airflow with 2 Exhaust Grilles (CFM / m³/hr.)	149 / 253	149 / 253	149 / 253	149 / 253
TYPE 12 / IP55 FILTER FANS				
RAL 7035 Light Gray:				
Item	20135	20137	20128	20133
Model	**SF1016514**	**SF1026514**	**SF1024514**	**SF1048514**
RAL 9011 Black:				
Item	20136	20138	20132	20134
Model	**SF1016513**	**SF1026513**	**SF1024513**	**SF1048513**
Free Airflow (CFM / m³/hr.)	149 / 253	149 / 253	149 / 253	149 / 253
Airflow with 1 Exhaust Grille (CFM / m³/hr.)	122 / 207	122 / 207	122 / 207	122 / 207
Airflow with 2 Exhaust Grilles (CFM / m³/hr.)	137 / 233	137 / 233	137 / 233	137 / 233
FILTER FAN UNIT CONSTRUCTION				
Fan RPM	2760 / 3030	2760 / 3030	2950	2950
Sound Pressure (dBA)	52	52	52	52
Operating Temperature Range:				
Maximum (°F / °C)	131 / 55	131 / 55	131 / 55	131 / 55
Minimum (°F / °C)	14 / -10	14 / -10	14 / -10	14 / -10
Service Life (hours)	40,000	40,000	40,000	40,000
Unit Dimensions - H x W x D (in. / mm)	9.84 x 9.84 x 4.72 / 250 x 250 x 120			
Cut-Out Dimensions - H x W (in. / mm)	8.78 x 8.78 / 223 x 223			
Weight (lb. / kg)	4.19 / 1.9			
TYPE 12 / IP54 EXHAUST GRILLES				
RAL 7035 Light Gray:				
Item / Model	19984 / SG1000404			
RAL 9011 Black:				
Item / Model	19985 / SG1000403			
TYPE 12 / IP55 EXHAUST GRILLES				
RAL 7035 Light Gray:				
Item / Model	20086 / SG1000504			
RAL 9011 Black:				
Item / Model	20087 / SG1000503			
ACCESSORIES				
Replacement Filters:				
Type 12 / IP54 Item	33589			
Type 12 / IP55 Item / Model	20197 / 10100066H			
Thermostat Item	21803 / TWR60			
Stainless Steel Washdown Shroud Item / Model	20182 / SH1000005			

Above airflow rates at 60 Hz; see performance curves for airflow at 50 Hz and more details.

Unit depth is from the back edge of the grille to the back of the fan.

Exhaust Grilles sold separately.

© 2011 Pentair Technical Products

Filter Fan Collection

SF10 162 CFM (275 M^3/Hr.) Side-Mount Filter Fan Performance Curve

TYPE 12 / IP 54 Filter Fan

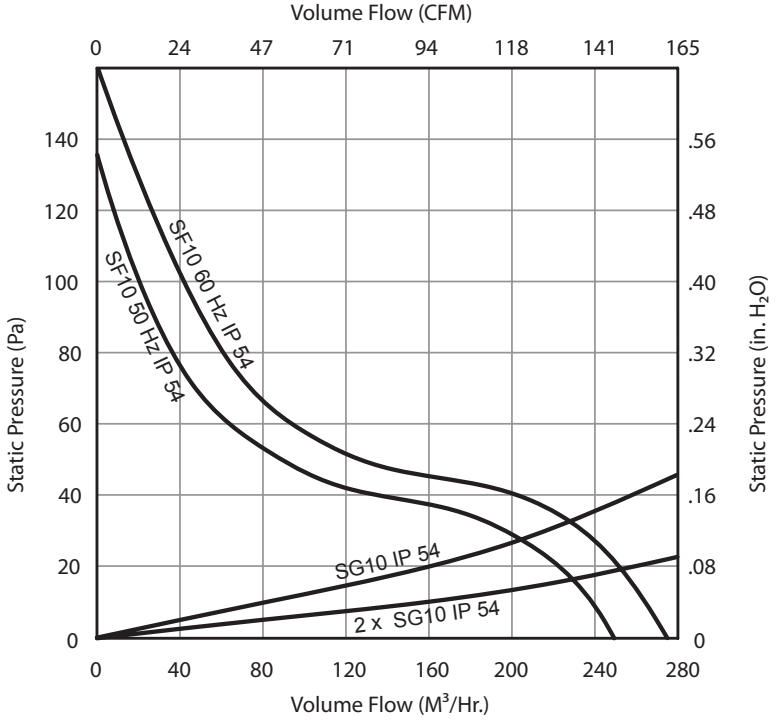

TYPE 12 / IP 55 Filter Fan

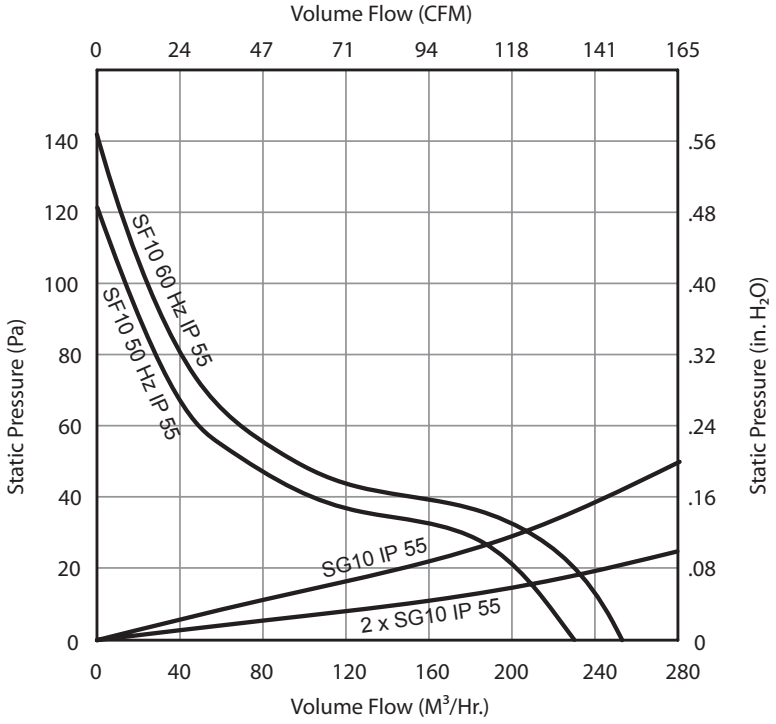

© 2011 Pentair Technical Products

Controllers

Dual Thermostat

Industry Standards

CE
CSA File No. 215952
cURus; File No. E164102

Application

Two thermostats in one, the Dual Thermostat independently controls equipment heating and cooling systems.

Features

- Two thermostats; one normally closed (NC), red, and one normally open (NO), blue, in one casing
- Wide adjustable temperature range (32 -140 F)
- Thermostatic bimetallic sensor element
- Connection: 4-pole terminal for AWG 14 max (2.5 mm ^{2})
- Mounting clip for 35-mm DIN rail

Finish

Light-gray plastic, UL94V-0

Bulletin: D85

Standard Product

Catalog Number	AxBxC in.	AxBxC mm	Switching Capacity (Normally Closed)	Switching Capacity (Normally Open)	Setting Range (Normally Closed)	Setting Range (Normally Open)
ADLTEMP	2.64 x 1.97 x 1.81	67 x 50 x 46	10 A resistive/2 A inductive @250 VAC, DC 30 W	5 A resistive/2 A inductive @250 VAC, DC 30 W	32-140 F	32-140 F

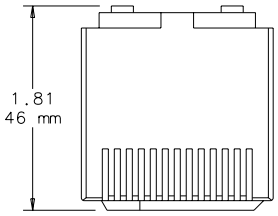

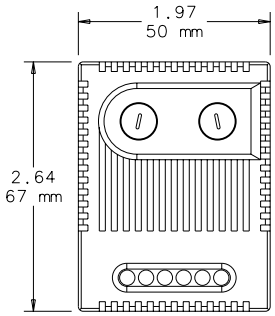

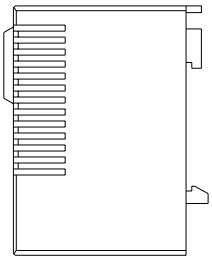

87939707

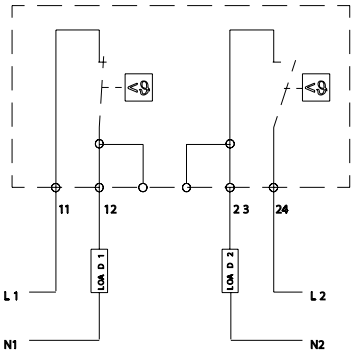

CONNECTION DIAGRAM

© 2009 Hoffman Enclosures Inc.

Corrosion Inhibitors

Industrial Corrosion Inhibitors

Hoffman corrosion inhibitors protect

- Interior components of electrical enclosures, boxes, consoles and wireways
- Interior components of electronic enclosures
- Electrical and electronic equipment and controls
- Parts and components that are packaged in crates during shipping and storage
- Switch gear and relay cabinets
- Interiors of pipes, conduits and fuse boxes
- Process control computers, instruments and recording devices
- Tool chest interiors and contents
- Equipment stored at construction sites

Chief Advantages

- Protects against salt and high humidity
- Eliminates the need of oiling, plating or dipping metal
- Puts protected equipment to use immediately without degreasing or coating removal

How They Work

Each inhibitor contains a special chemical combination that vaporizes and condenses on all surfaces in an enclosed area. Vapors will redeposit as needed in the event of condensation of moisture on surfaces. These vapors reach every part of an enclosure, protecting all interior components. Spraying, wiping or greasing are not required. This eliminates precoating, special wraps and drying agents. Protection is effective even in salt-water atmospheres. The AHCI5E and AHCI10E emitters have additional red-metal inhibitors for further protection. Enclosures containing corrosion inhibitors must be reasonably sealed.

Life Expectancy and Usage

The normal useful life-span of Hoffman corrosion inhibitors is in excess of one year. However, inhibitor life expectancy is shortened by approximately 25 percent when exposed to temperatures above 104 F (40 C). This product is not recommended for use where temperature exceeds 199 F. Since Hoffman corrosion inhibitors are vapor-phase protective, all surfaces to be protected should be accessible to the vapors. The maximum distance the vapors can travel is approximately 1.50 ft. (.46 m). Protection of long, narrow enclosures can be achieved with tape or multiple inhibitors.

Storage and Handling

Each Hoffman corrosion inhibitor is individually packaged in a resealable bag for maximum effectiveness at the time of usage. Corrosion inhibitors should be stored at temperatures not exceeding 120 F (45 C). Hoffman corrosion inhibitors are not returnable.

When determining the proper corrosion inhibitor for your application, assume the enclosure volume to be protected is greater than calculated if (1) cabinet doors are opened frequently, (2) cabinet is located in an extremely corrosive area and/or (3) cabinet length divided by depth is greater than four.

AHCI1DV

Foam device protects one cubic foot (28 liters) of enclosure volume for approximately one year.
Size: .25 x 1.25 x 3.00 in. (6 x 32 x 76 mm)

AHCI5E

Emitter protects 5 ft.^{3} (142 liters) of enclosure volume for approximately two years from the date of manufacture. Emitters contain additional red metal (non-ferrous) inhibitors.
Size: 2.31 in. (diameter) x 0.81 in. (high) (59 mm x 21 mm)

AHCI10E

Emitter protects 10 ft.^{3} (283 liters) of enclosure volume for approximately two years from the date of manufacture. Emitters contain additional red metal (non-ferrous) inhibitors.
Size: 2.31 in. (diameter) x 1.38 in. (high) (59 mm x 35 mm)

AHCI60R

Tape protects 60 ft.^{3} of enclosure volume per roll. Use approximately 2.50 in. (63 mm) of tape per cubic foot (28 liters) of enclosure volume to be protected. Each roll of tape is packaged individually in a resealable bag.
Size: .25 in. x .75 in. x 12.00 ft. (6 mm x 19 mm x 3.6 m)

AHCI240R

Tape protects 240 ft.^{3} of enclosure volume per roll. Use approximately 1.00 in. (25 mm) of tape per cubic foot (28 liters) of enclosure volume to be protected. Each roll of tape is packaged individually in a resealable bag.
Size: .25 in. x 2.00 in. x 20.00 ft. (6 mm x 51 mm x 6.1 m)

AHCI238S

Spray is a non-conductive, nonflammable, vapor-phase film and is non-toxic. It has essentially neutral pH value. Application provides instant protection against corrosion. Spray is water soluble and can be easily flushed away with water if desired. This product should be kept from freezing and has a shelf life of 2+ years in normal warehouse conditions.

Bulletin: A80

Standard Product

Catalog Number	Enclosure Volume Protected (ft.^{3})	Enclosure Volume Protected (liters)	Package Qty.
AHCI1DV	1	28.32	50
AHCI5E	5	141.6	25
AHCI10E	10	283.2	12
AHCI60R	60 per roll	1699 per roll	3
AHCI240R	240 per roll	6797 per roll	1
AHCI238S	Corrosion Inhibitor Spray	Corrosion Inhibitor Spray	6

Metal Protection Chart

Metal	Protected by Chemical	Unprotected by Chemical
Aluminum	Marked reduction of surface attack; no pitting	Severe surface attack; tarnish; pitting
Brass [a]	Decreased tarnish; very minor surface attack	Surface discoloration; pitting
Steel, Iron	No change	Severe corrosion
Copper [a]	Slight staining	Heavy corrosive attack
Zinc Plate	Slight discoloration	Severe corrosion
Tin Plate	Slight discoloration	Moderate corrosive attack

[a] AHCI5E and AHCI10E emitters are recommended for these materials

© 2009 Hoffman Enclosures Inc.

CONCEPT® Wall-Mount Enclosures

CONCEPT® with Additional Quarter-Turn Latches, Type 4X

Industry Standards

Mounting brackets required to meet UL/CSA external mounting requirements.

UL 508A Listed; Type 3R, 4, 4X, 12; File No.E61997
cUL Listed per CSA C22.2 No 94; Type 3R, 4, 4X, 12; File Number E61997

NEMA/EEMAC Type 3R, 4, 4X, 12, 13
IEC 60529, IP66
Meets NEMA Type 3RX requirements

Application

For indoor or outdoor applications that require corrosion protection from chemicals and water, CONCEPT® enclosures house larger controls and feature streamlined styling with an attractive stroked finish, flush quarter-turn latches and an integral door ramp that ensures the door gasket sealing surface aligns with the enclosure body for secure closure.

Specifications

- Manufactured from 14 gauge Type 304 or Type 316L stainless steel
- Seams continuously welded and ground smooth
- Minimum-width body flange provides maximum body opening
- External formed 90-degree body flange trough
- Stainless steel quarter-turn latches with flush slotted insert provided on three sides of enclosure door
- Integral door ramp to properly align door and gasket to body offset
- Panel mounting studs fit optional CONCEPT panels and other accessories
- Mounting holes in back of body for direct mounting or for optional external mounting brackets
- Stainless steel hidden hinges
- Doors are interchangeable and easily removed by pulling clip-style hinge pins
- Door bars furnished
- Provision on door for thermoplastic data pocket
- Provision on door for optional doorstop kit
- Seamless foam-in-place gasket
- Self-grounding latch system with double seal
- Bonding provision on door; grounding stud on body
- Furnished hardware kit consists of panel mounting nuts, panel grounding hardware and sealing washers for wall-mounting holes
- Installation instructions

Finish

Door and body have smooth #4 brushed finish.

Patents

This product is covered by the following patents:
US D360,345
DE 9405854.7
US 5,509,703
US 5,666,695
Other patents pending.

Accessories

See also Accessories.
Industrial Corrosion Inhibitors
Type 316 Stainless Steel Door Stop Kit
CONCEPT® Panels
H_2OMIT™ Vent Drains, Type 4X
H_2OMIT™ Thermoelectric Dehumidifier
Handles
Lock Inserts

Modification and Customization

Hoffman excels at modifying and customizing products to your specifications. Contact your local Hoffman sales office or distributor for complete information.

Bulletin: CWS

© 2010 Pentair Technical Products

CONCEPT® Wall-Mount Enclosures

Standard Product

Catalog Number	AxBxC in./mm	Door Gauge	Body Gauge	Panel	Conductive Panel	Panel Size D x E in./mm	Mounting G x G in./mm	Latches Qty.	Style	J in./mm
CSD363610SSR	36.00 x 36.00 x 10.00 914 x 914 x 254	14	14	CP3636	CP3636G	34.20 x 34.20 869 x 869	34.50 x 34.50 876 x 876	4	Quarter-turn	10.00 254
CSD363610SS6R	36.00 x 36.00 x 10.00 914 x 914 x 254	14	14	CP3636	CP3636G	34.20 x 34.20 869 x 869	34.50 x 34.50 876 x 876	4	Quarter-turn	10.00 254
CSD423610SSR	42.00 x 36.00 x 10.00 1067 x 914 x 254	14	14	CP4236	CP4236G	40.20 x 34.20 1021 x 869	40.50 x 34.50 1029 x 876	4	Quarter-turn	13.00 330
CSD423610SS6R	42.00 x 36.00 x 10.00 1067 x 914 x 254	14	14	CP4236	CP4236G	40.20 x 34.20 1021 x 869	40.50 x 34.50 1029 x 876	4	Quarter-turn	13.00 330
CSD483610SSR	48.00 x 36.00 x 10.00 1219 x 9145 x 254	14	14	CP4836	CP4836G	46.20 x 34.20 1173 x 869	46.50 x 34.50 1181 x 876	4	Quarter-turn	14.00 356
CSD483610SS6R	48.00 x 36.00 x 10.00 1219 x 914 x 254	14	14	CP4836	CP4836G	46.20 x 34.20 1173 x 869	46.50 x 34.50 1181 x 876	4	Quarter-turn	14.00 356
CSD603610SSR	60.00 x 36.00 x 10.00 1524 x 914 x 254	14	14	CP6036	CP6036G	58.20 x 34.20 1478 x 869	58.50 x 34.50 1486 x 876	4	Quarter-turn	17.00 432
CSD603610SS6R	60.00 x 36.00 x 10.00 1524 x 914 x 254	14	14	CP6036	CP6036G	58.20 x 34.20 1478 x 869	58.50 x 34.50 1486 x 876	4	Quarter-turn	17.00 432
CSD363612SSR	36.00 x 36.00 x 12.00 914 x 914 x 305	14	14	CP3636	CP3636G	34.20 x 34.20 869 x 869	34.50 x 34.50 876 x 876	4	Quarter-turn	10.00 254
CSD363612SS6R	36.00 x 36.00 x 12.00 914 x 914 x 305	14	14	CP3636	CP3636G	34.20 x 34.20 869 x 869	34.50 x 34.50 876 x 876	4	Quarter-turn	10.00 254
CSD423612SSR	42.00 x 36.00 x 12.00 1067 x 914 x 305	14	14	CP4236	CP4236G	40.20 x 34.20 1021 x 869	40.50 x 34.50 1029 x 876	4	Quarter-turn	13.00 330
CSD423612SS6R	42.00 x 36.00 x 12.00 1067 x 914 x 305	14	14	CP4236	CP4236G	40.20 x 34.20 1021 x 869	40.50 x 34.50 1029 x 876	4	Quarter-turn	13.00 330
CSD483612SSR	48.00 x 36.00 x 12.00 1219 x 914 x 305	14	14	CP4836	CP4836G	46.20 x 34.20 1173 x 869	46.50 x 34.50 1181 x 876	4	Quarter-turn	14.00 356
CSD483612SS6R	48.00 x 36.00 x 12.00 1219 x 914 x 305	14	14	CP4836	CP4836G	46.20 x 34.20 1173 x 869	46.50 x 34.50 1181 x 876	4	Quarter-turn	14.00 356
CSD603612SSR	60.00 x 36.00 x 12.00 1524 x 914 x 305	14	14	CP6036	CP6036G	58.20 x 34.20 869 x 462	58.50 x 34.50 1486 x 876	4	Quarter-turn	17.00 402
CSD603612SS6R	60.00 x 36.00 x 12.00 1524 x 914 x 305	14	14	CP6036	CP6036G	58.20 x 34.20 869 x 462	58.50 x 34.50 1486 x 876	4	Quarter-turn	17.00 402
CSD723612SSR	72.00 x 36.00 x 12.00 1829 x 914 x 305	14	14	CP7236	—	70.20 x 34.20 1783 x 462	70.50 x 34.50 1791 x 876	4	Quarter-turn	23.00 584
CSD723616SSR	72.00 x 36.00 x 16.00 1829 x 914 x 406	14	14	CP7236	—	70.20 x 34.20 1783 x 462	70.50 x 34.50 1791 x 876	4	Quarter-turn	23.00 584

Purchase panels separately.
Optional NEMA style steel and stainless steel panels require conversion kit catalog number CCPM-4.
Catalog numbers ending in 6R are Type 316L stainless steel.

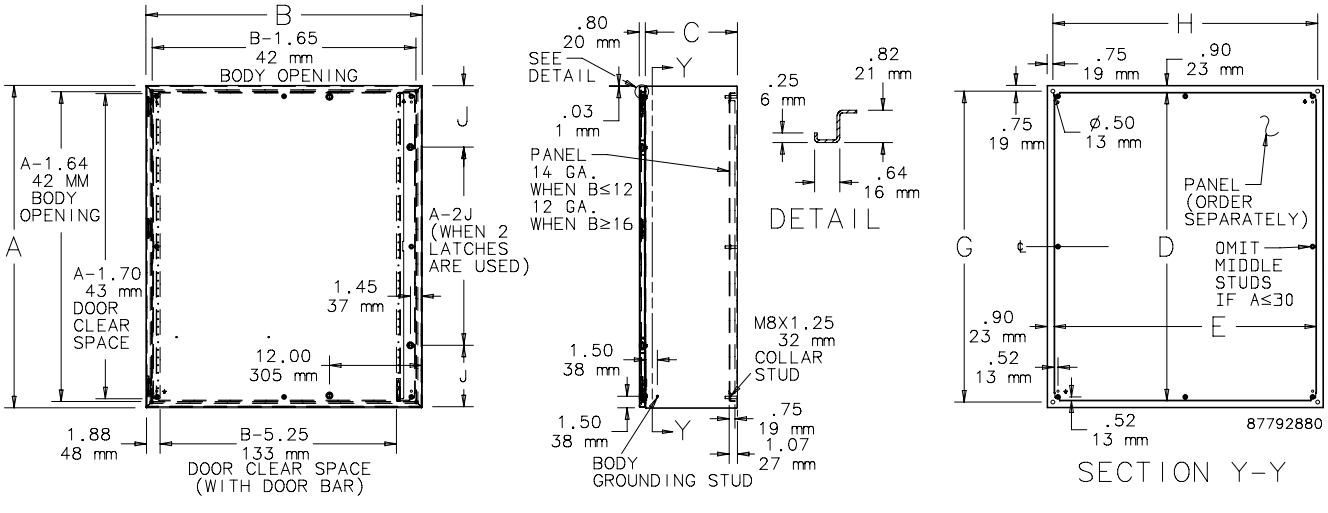

© 2010 Pentair Technical Products

Control Station

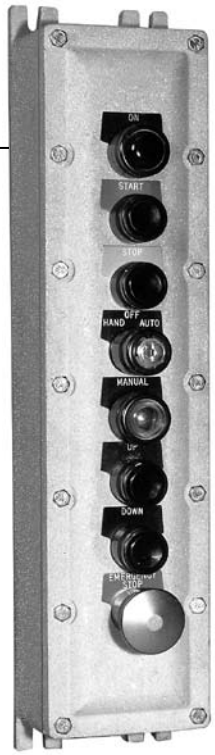

FEATURES

- Lightweight, corrosion-resistant, copper-free aluminum alloy (0.3% max. copper content).
- All operating shafts are stainless steel for corrosion resistance.
- Durable cast on lugs cannot get lost.
- Ground screw is highly visible and accessible.
- Uniform wall thickness (not ribbed) for versatility of conduit openings assuring 5 full threads engagement and maximum available area for conduit drilling and tapping.
- Operators may be mounted through back wall for panel mounting.
- Box depth provides for the stacking of 2 contact blocks.
- Anodized aluminum operators install easily in the field.

TABLE A2 - CONTROL STATION BOXES

# of Operators	Surface Mount	Panel Mount*	Std. Cond. Size (in.)
1	X1	X1P	¾
2	X2	X2P	¾
3	X3	X3P	¾
4	X4	X4P	1
5	X5	X5P	1¼
6	X6	X6P	1¼
7	X7	X7P	1¼
8	X8	X8P	1¼
12	X12	X12P	1½
15	X15	X15P	1½
18	X18	X18P	1½

***Panel Mount:** Operators mounted in back, add P to operator suffix.

Surface Mount: Operators mounted in cover.

NOTE: All operator holes are 3/4" - 14 NPSM

TABLE B2 - PILOT LIGHTS & LIGHTED PUSHBUTTON

	SUFFIX NOS. FOR PILOT LIGHTS		
Lens Color	Guarded Candleabra Base	Guarded Slide Base	Lighted Pushbutton** Unguarded
Amber	337	343	30
Blue	338	344	35
Clear	339	345	40
Green	340	346	45
Red	341	347	50
White	342	348	55

Certifications

Class I, Groups C & D
Class II, Groups E, F & G
Class III
UL Standard 698
CSA Standard C22.2 No. 30
For NEMA 4 or special machining options-see XIFC Series

**CSA certified products require guarded pilot devices

The **ADALET** Engineering Department is Available to Assist you in the Selection of Enclosures and Accessories.

Tmax
Molded case circuit breakers

Tmax
Molded case circuit breakers

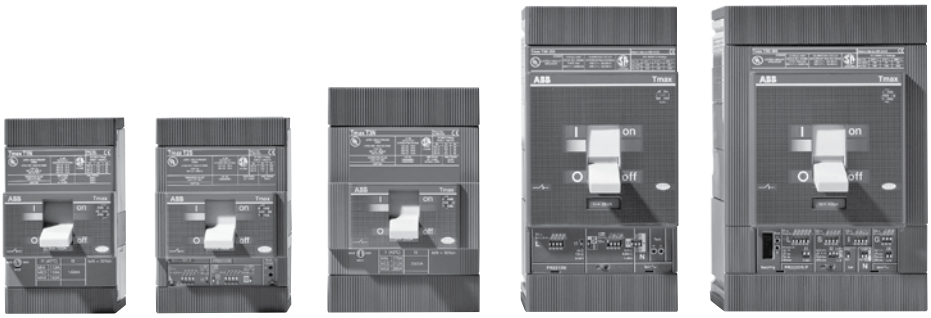

Introduction
ABB is once again demonstrating its commitment to new product development and its superiority in product technology. Never before has the industry seen such high performance, versatility and standardization in a range of molded case circuit breakers.

The ABB Tmax line of circuit breakers, with a range up to 3000A, has several key features that go along with its very small size:

- Double insulation – this construction characteristic allows for the UL Listed field installation of internal accessories without exposure to energized parts.
- Complete range of electrical and mechanical accessories
- Positive operation – breakers from ABB ensure that the toggle indicates the precise position of the moving contacts. This guarantees safe and reliable signaling by the device.
- Installation – Tmax molded case circuit breakers can be installed in panels and switchboards in either the horizontal or vertical planes while being fed from either end without any derating of their performance characteristics.
- Interrupting ratings at 480VAC up to 150kAIC.
- Compact size
- All Tmax molded case circuit breakers are UL Listed and IEC rated for global application and acceptance.
- All versions of the Tmax family are suitable for reverse feed applications.

The ABB Tmax product line has the performance and accessories to satisfy all industry requirements in the 600VAC to 600VDC ranges.

Frame sizes — Nine basic sizes
The ABB Tmax series includes nine basic frame sizes as well as the T1 single pole with the range rated from 15A to 3000A at 480VAC. The various versions carry the following interrupting capacities:

- **B** Basic breaking capacity
- **N** Normal breaking capacity
- **S** Standard breaking capacity
- **H** High breaking capacity
- **L** Extra high breaking capacity
- **V** Very high breaking capacity

Derived versions
- Thermal magnetic
- Electronic
- Molded case switches
- Motor circuit protectors (MCPs)
- Direct current (DC) rated

ABB Tmax versions
- Fixed: all models
- Drawout or plug-in: T2, T3, Ts3, T4, T5, T6, T7 & T7M
- UL File #E93565 (breakers and MCPs)
  #E116596 (Accessories)
  #E116595 (Molded case switches)

T1
100A, 600Y/347V, 480V Δ
Thermal-magnetic

Tmax MCCBs

T1

Dimensions 3P Fixed Version 5.12H x 3.00W x 2.76D

Weight 2.34 (lbs)

General
The T1 breaker family ranges from 15 through 100 amperes. The T1 trip units are non-interchangeable and use the very latest technology in electromagnetic relays for overcurrent trip protection. Thermal overload protection is provided by heat sensitive bimetals. Short circuit protection for the breaker is accomplished using a precise magnetic coil. State of the art construction in contacts and arcing chambers aid in limiting damaging fault currents through the protected circuits.

Standards
The UL489/CSA 22.2 version of T1 also carries an IEC-60947-2 rating.

Versions
The T1 frame is available in two versions:
T = Thermal-magnetic, fixed
D = Molded case switch

Performance levels
The T1 breaker has two performance levels available:
B = Basic single pole
N = Normal three pole

Number of poles
The T1 molded case circuit breaker is available in single, three and four pole versions. Estimate 4 pole pricing by adding 35% to the 3 pole price and contact your ABB sales person for details.

Molded case switches
UL489 switches include no overcurrent protection except for a high instantaneous trip mechanism for self protection.

UL489 / CSA C22.2 Interrupting capacity (kA RMS)

Voltage	Continuous rating	B (1 pole)	N
240VAC	15 – 100A	—	50 ①
347VAC	15A 20 – 100A	10 14	— —
480VAC Δ	15A ② 20 – 100A	— —	14 22
600Y/347VAC	15 – 100A	—	10
250VDC 2 pole series	15 – 100A	—	25
500VDC 3 pole series	15 – 100A	—	25

IEC 60947-2 Interrupting capacity (kA RMS)

Voltage	Continuous rating	B (1 pole)	N
230VAC	15 – 100A	25 ③	50
415VAC	15 – 100A	—	36
690VAC	15 – 100A	—	6
500VDC 2 pole series	15 – 100A	—	36

16

① In 15A 35kA @ 240VAC.
② 15A available in 480/277 VAC only.
③ Interrupting capacity for 16-20A is 16kA

T1
100A, 600Y/347V, 480V Δ
Thermal-magnetic/Molded Case Switch

T1B TMF — Single pole thermal magnetic fixed ①

Breaker	IC at 277VAC	Rating	Magnetic trip	1 pole, 277VAC catalog number	List price
T1B	10kA	15A	1000A	T1B015TL-1	$ 230
	18kA	20A	1000A	T1B020TL-1	
		25A	1000A	T1B025TL-1	
		30A	1000A	T1B030TL-1	
		40A	1000A	T1B040TL-1	
		50A	1500A	T1B050TL-1	
		60A	1500A	T1B060TL-1	
		70A	1500A	T1B070TL-1	262
		80A	1500A	T1B080TL-1	
		90A	1500A	T1B090TL-1	
		100A	1500A	T1B100TL-1	

T1N TMF — 3 pole thermal magnetic fixed

Breaker	IC at 480VAC	Rating	Magnetic trip	3 pole, 600Y/347VAC/500VDC catalog number	List price
T1N	14kA	15A	1000A	T1N015TL ②	$ 402
	22kA	20A	1000A	T1N020TL	
		25A	1000A	T1N025TL	
		30A	1000A	T1N030TL	
		40A	1000A	T1N040TL	
		50A	1500A	T1N050TL	
		60A	1500A	T1N060TL	
		70A	1500A	T1N070TL	479
		80A	1500A	T1N080TL	
		90A	1500A	T1N090TL	
		100A	1500A	T1N100TL	

T1N TMF — 100% Rated thermal-magnetic

Breaker	IC at 480VAC	Rating	Magnetic trip	3 pole 600Y/347 500VDC catalog number	List price
T1N	14kA	15 ①	1000A	T1NQ015TL	$ 442
	22kA	20	1000A	T1NQ020TL	
		25	1000A	T1NQ025TL	
		30	1000A	T1NQ030TL	
		40	1000A	T1NQ040TL	
		50	1500A	T1NQ050TL	
		60	1500A	T1NQ060TL	
		70	1500A	T1NQ070TL	527
		80	1500A	T1NQ080TL	
		90	1500A	T1NQ090TL	
		100	1500A	T1NQ100TL	

T1N-D — Molded case switch

Breaker	Interrupting capacity ③	Rating	Magnetic trip	480VAC/500VDC catalog number	List price
T1-D	240V, 50kA	100A	1000A	T1N100DL	$ 431

① Electrical/mechanical accessories cannot be installed on single pole breakers.
② Rated 480V/277 VAC for 15A.
③ When protected by a OCPD with appropriate ratings.

Series KT7 Motor Circuit Controllers

Versatile, convenient and space saving… for a variety of applications

Sprecher+Schuh's KT7 series of Motor Circuit Controllers are some of the most versatile and technologically advanced control products available today.

In one small package, KT7s combine the functions of:

- Current limiting short circuit protection
- Class 10 thermal overload protection
- Switching and
- Signaling

These devices can be used in a variety of control schemes that reduce panel space, simplify installation and eliminate the need for more expensive equipment.

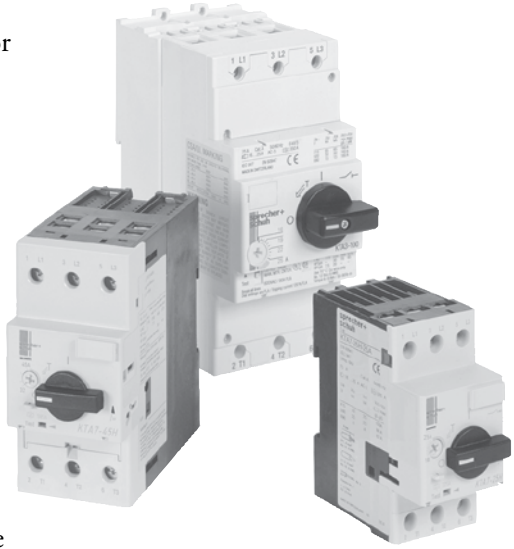

Increased ratings…

Sprecher+Schuh's KT7 controller family offers higher interrupting capacities (KAIC ratings) and improved Type 2 Coordination and Type E (life after short-circuit). The KTA7-25H/32H offers the option of higher short-circuit current ratings (SCCR) than the standard interrupting capacity of the KTA7-25S/32S Motor Controllers. KTA7 is also available in frames up to 45A. KTC7 can be used with High Efficiency motors. KTB7 Magnetic Only controllers can be combined with CA7 contactors and CEP7 overloads to provide additional features.

Designed for multiple applications

UL rules allow KT7 Motor Circuit Controllers to be used in a wide variety of applications including:

- Manual Starter Applications
- Traditional Group Motor Applications with compliance to the new Tap Conductor Ratings
- Motor Disconnect Applications
- Self-Protected Manual Combination Starter Applications (Type E)
- Individual Combination Starter Applications (Type E/F)
- Multi-motor Starter Combination Applications (Type E/F)

See page F119 for
Methods of Applying KT7 Motor Circuit Controllers

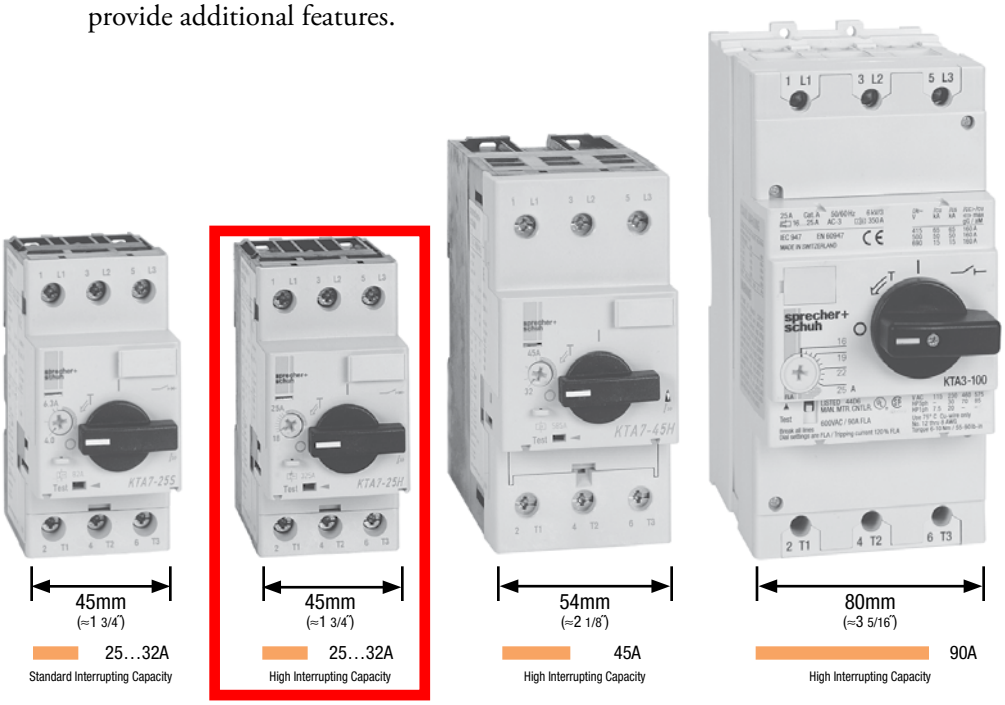

KTB7 Base Unit ❷

Maximum Horsepower						❶ Rated Operational Current [A]	Magnetic Release Response Current [A]	Catalog Number	Price
Typical Single Phase		Typical Three Phase [HP]							
115V	230V	200V	230V	460V	575V				
KTB7-25S — Standard Interrupting Capacity									
~	~	~	~	~	~	0.40	8.2	**KTB7-25S-0.4A**	**218**
~	~	~	~	~	1/2	1.0	21	**KTB7-25S-1.0A**	**249**
1/10	1/6	1/2	1/2	1	1-1/2	2.5	52	**KTB7-25S-2.5A**	**249**
KTB7-25…32H — High Interrupting Capacity									
1/10	1/6	1/2	1/2	1	1-1/2	2.5	33	**KTB7-25H-2.5A**	**312**
1/8	1/3	3/4	3/4	2	3	4	52	**KTB7-25H-4.0A**	**312**
1/2	1-1/2	2	3	5	7-1/2	10	130	**KTB7-25H-10A**	**312**
1	2	3	5	10	10	16	208	**KTB7-25H-16A**	**355**
2	3	7-1/2	7-1/2	15	20	25	325	**KTB7-25H-25A**	**355**
2	5	7-1/2	10	25	30	32	448	**KTB7-32H-32A**	**474**
KTB7-45H — High Interrupting Capacity									
2	5	7-1/2	7-1/2	15	20	25	325	**KTB7-45H-25A**	**510**
2	5	7-1/2	10	20	30	32	416	**KTB7-45H-32A**	**573**
3	7-1/2	10	15	30	40	45	585	**KTB7-45H-45A**	**573**

KTB7-25S

Description

The KTB7 is designed without a thermal trip element (i.e., current adjustment range). It should be selected for applications where a separate motor overload protection device is used. Magnetic trip is the same as the KTA7 (approximately 13x operational current).

❶ APPLICATION NOTE: Product Selection for Heavy Duty Starting Applications using KTB7-25S, KTB7-25H/32H and KTB7-45H Motor Circuit Controllers

The KTB7 Motor Circuit Controller is designed and tested to protect a motor circuit in case of a short circuit. A separate Sprecher + Schuh CEP7-EE_ overload relay with selectable trip class should be used to protect the motor against overload.

In Applications with motor starting times exceeding 10 seconds (heavy duty starting) the rated operational current (I_e) of the motor FLA must be multiplied by the following factors for selection of the KTB7 Motor Circuit Controller KTB7-25S, KTB7-25H/32H and KTB7-45H.

Trip classes according to UL 508 Section 52 and IEC 60947-4-1
CLASS 10 = 1.00 CLASS 15 = 1.22 CLASS 20 = 1.42
CLASS 25 = 1.58 CLASS 30 = 1.73
The maximum number of motor starts in 25 cycles/hour with a minimum OFF-time of 120 seconds between cycles. This additional calculation and selecting a larger frame size is necessary to compensate (dissipate) the increased heat resulting from long acceleration applications effecting the rated operational current of the KTB7.

Application Example:
Motor 480 VAC, 10 HP, I_e 14 FLA
Heavy duty starting application with start time of up to 18 seconds

Solution:
Starting time up to 18 seconds requires dimensioning for CLASS 20.
- Selection of the Motor Circuit Controller for Short Circuit Protection: Multiply the rated operational current I_e with factor for CLASS 20: $I_e(20)$ = 14 A x 1.42 = 19.9 A
- Select corresponding Sprecher + Schuh KTB7-25S, KTB7-25H/32H or KTB7-45H from catalog using next higher current rating: KTB7-25H-25A

❷ Horsepower ratings shown in the table are for reference only. The final selection of the manual starter depends on the actual motor full load current and service factor.
- For motor with service factor less than 1.15. Use motor nameplate full load current times 0.9 and choose the motor starter with the appropriate current range. Example: Motor F.L.C. = 4.2A; S.F. = 1.0. – (4.2A x 0.9 = 3.78A). Select Catalog Number KTA7-25S-4.0A.

KTB7 UL Ratings Application Chart

Device	Manual Motor Starter		Manual Controller for Group Installation ❶			Manual Controller as Motor Disconnect ❷	
	Max. Short Circuit Current [kA]		Max. Fuse or Circuit Breaker	Max. Short Circuit Current [kA]		Max. Short Circuit Current [kA]	
	480V	600V		480V	600V	480V	600V
KTA7-25S — Standard Interrupting Capacity							
KTB7-25S-0.4A	65	47	450	65	47	65	47
KTB7-25S-1.0A	65	47	450	65	47	65	47
KTB7-25S-2.5A	65	30	450	65	30	65	30
KTA7-25…32H — High Interrupting Capacity							
KTB7-25H-2.5A	65	30	450	65	30	65	30
KTB7-25H-4.0A	65	30	450	65	30	65	30
KTB7-25H-10A	65	30	450	65	30	65	30
KTB7-25H-16A	65	30	450	65	30	65	30
KTB7-25H-25A	30	30	450	30	30	30	30
KTB7-32H-32A	30	30	450	30	30	30	18
KTA7-45H — High Interrupting Capacity							
KTB7-45H-25A	65	30	600	65	30	65	30
KTB7-45H-32A	65	30	600	65	30	65	30
KTB7-45H-45A	65	18	600	65	18	65	18

❶ UL 508, CSA 22.2 No. 14 for group installation, in connection with short-circuit protection device.
❷ UL 508 Part III.

"SS/SA" Series Shock Relay

TSBSS05
TSBSS30
TSBSS60

TSBSA05*
TSBSA30*
TSBSA60*

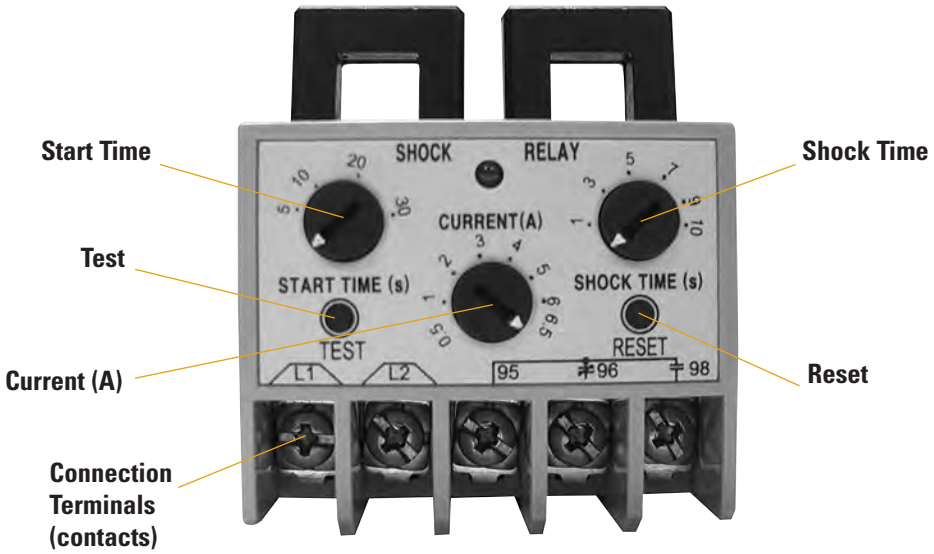

Explanation of Terms

Start Time
During startup, the current draw of a motor is greater than the running current. In order to prevent the shock relay from engaging during startup, the start time of the shock relay is adjustable from 0.2 seconds to 30 seconds.

Test
The test button simulates a current overload.

Current (A)
The trip current level is user adjustable and varies according to the shock relay model selected — see specification chart on the following page for complete details. The Shock Relay will only trip when the current draw of the motor exceeds both the current setting and the shock time setting.

Shock Time
The shock time feature allows the current overload time to be set. The shock time is adjustable from 0.2 seconds to 10 seconds. The shock relay will only trip when the current draw of the motor exceeds the trip current and when the shock time is exceeded.

Reset
The reset button will reset the shock relay after a current overload.

Connection Terminals (contacts)
L1 & L2: Used to provide power to the shock relay.
95, 96 & 98: Provide output from the shock relay.
The application - such as a motor - can be wired into these terminals.
When the shock relay trips, the circuit opens and the application stops.

*TSBSA series: Identical to the TSBSS series except the TSBSA shock relay automatically resets when the motor power is disconnected.

TSUBAKI

Safeguarding your equipment

"SS/SA" Series Shock Relay Specifications

SPECIFICATIONS / MODEL	TSBSSA05	TSBSSA30	TSBSSA60
Built-in or External Current Transformer	Built-in	Built-in	Built-in
Motor Horsepower at 200 VAC	0.08hp ~ 1.5hp	2hp ~ 7.5hp	10hp ~15hp
Motor Horsepower at 400 VAC	0.27hp ~ 3hp	5hp ~ 15hp	20hp ~ 30hp
Load Current Setting Range	0.5A ~ 5A	3A ~ 30A	5A ~ 60A
Trip Output Relay - contact rating	3A load	3A load	3A load
Trip Output Relay - status	Normally Loaded	Normally Loaded	Normally Loaded
Start Time Setting Range	0.2 ~ 30 sec.	0.2 ~ 30 sec.	0.2 ~ 30 sec.
Shock Time Setting Range	0.2 ~ 10 sec.	0.2 ~ 10 sec.	0.2 ~ 10 sec.
Input Voltage	90VAC to 240VAC 50/60HZ	90VAC to 240VAC 50/60HZ	90VAC to 240VAC 50/60HZ
Test Function Built-in	Yes	Yes	Yes
Mounting available for 35mm DIN rail or panel	Yes	Yes	Yes
Operating Temperature Range	-4°F ~ 158°F	-4°F ~ 158°F	-4°F ~ 158°F
UL Approval	Yes	Yes	Yes

"SS/SA" Series Shock Relay Dimensions (mm)

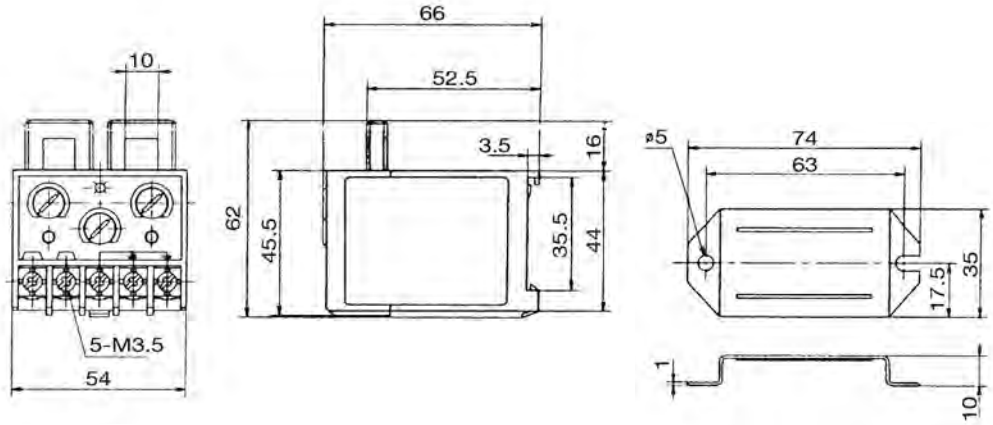

"SS/SA" Series Shock Relay Typical Wiring Diagram

Three-Phase

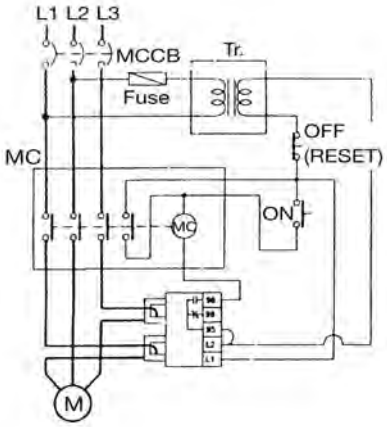

Single-Phase

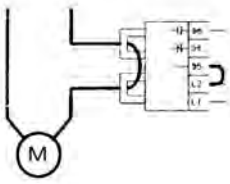

CB:	Circuit Breaker	**Off:**	Stop Switch
MC:	Magnetic Contactor	**M:**	Motor
On:	Start Switch	**Tr:**	Transformer

TSUBAKI

Non-Reversing, Three Pole NEMA Labeled Contactors with AC Coil ❶❸

NEMA Size	Maximum Horsepower 1Ø 115V	1Ø 230V	3Ø 200V	3Ø 230V	3Ø 460V	3Ø 575V	Standard Auxiliary Contacts NO	NC	Catalog Number	Price
00	1/3	1	1-1/2	1-1/2	2	2	1	0	CAN7-12-10-✱	155
0	1	2	3	3	5	5	1	0	CAN7-16-10-✱	174
1	2	3	7-1/2	7-1/2	10	10	1	0	CAN7-37-10-✱	288
2	3	7-1/2	10	15	25	25	1	0	CAN7-43-10-✱	308
3	7-1/2	15	25	30	50	50	1	0	CAN7-85-10-✱	482
4	~	~	40	50	100	100	1	1	CAN6-180-11-✱	1608
									CAN6-180-EI-11-✱	1850
5	~	~	75	100	200	200	1	1	CAN6-300-EI-11-✱	2375

CAN7 NEMA labeled contactor (AC)

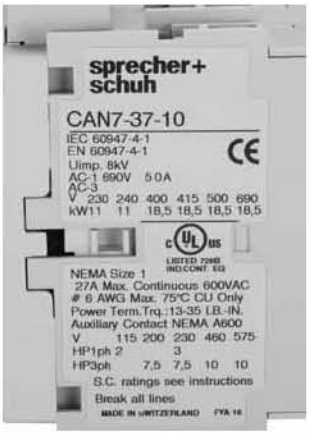

Application Notes

- NEMA contactors are UL Listed and rated in accordance with the requirements of NEMA standards publication ICS-2. These contactors are labeled for applications that require compliance with NEMA standards.
- Sizes are based on standard NEMA classifications.
- Easy coil change and contact replacement. See page A61 for CAN7 coils and pages A106-108 for CA(N)6 coils and contacts.
- Snap-on auxiliary contact blocks available in many configurations. See pages A52-53 (CA[N]7) and page A104 (CA[N]6).
- Available as open units or in NEMA 1, 3R, 4, 4X and 12 enclosures. Contact your Sprecher + Schuh representative for enclosed pricing. NEMA sized starters with AC Coils are listed on page C26.

Note: CA6 open-type contactors include terminal bolts. If lugs are required, see page A101 for ordering information.

CAN7 AC Coil Codes ❷

CAN7-12...85		
AC Coil Code	Voltage Range 50 Hz	60 Hz
24Z	24V	24V
120	110V	120V
208	~	208V
220W	~	208V-240V
240	220V	240V
277	240V	277V
380	380V-400V	440V
480	440V	480V
600	550V	600V

CAN6 AC Coil Codes Conventional Coils ❷

CAN6-180		
AC Coil Code	Voltage Range 50 Hz	60 Hz
24	~	24V
120B	110V	120V
208	~	208V
240B	220-230V	260V
277	240V	277V
380	380V-400V	440V
480	415V	480V
575	500V	575V

CAN6 AC Coil Codes "EI" Electronic Coils ❷❸

CAN6-180-EI...300-EI	
AC Coil Code	Voltage Range 50 Hz / 60 Hz
24 ❹	24V
120	110-130V
220W	208-277V
460W	380-500V

Ordering Instructions

Specify Catalog Number	
Replace (✱) with Coil Code	See Coil Codes on this page.

❶ Refer to page A87 for CAN7 dimensional information and page A127 for CA(N)6 dimensions.
❷ Other voltages available, see page A61 for CAN7 and pages A106-107 for CA(N)6. *Nonstandard coil voltages not listed here must be ordered and installed separately as renewal parts.*
❸ "-EI" designates contactor with Electronic Interface coil.
❹ 24 V AC coil not available for CAN6-300-EI.

SSNA9000

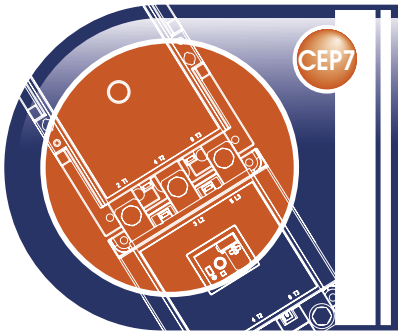

Advanced Solid State Motor Protection

Second Generation CEP7 Solid State Overload Relays

The introduction of the second generation of CEP7 solid state overload relays advances Sprecher + Schuh's leading edge technology with several improved features. This second generation of CEP7 overload relay includes features like:

- Selectable trip class and field installable modules
- A wider (5:1) set current adjustment range
- A more robust mechanical and electrical mounting
- Self latching mechanism

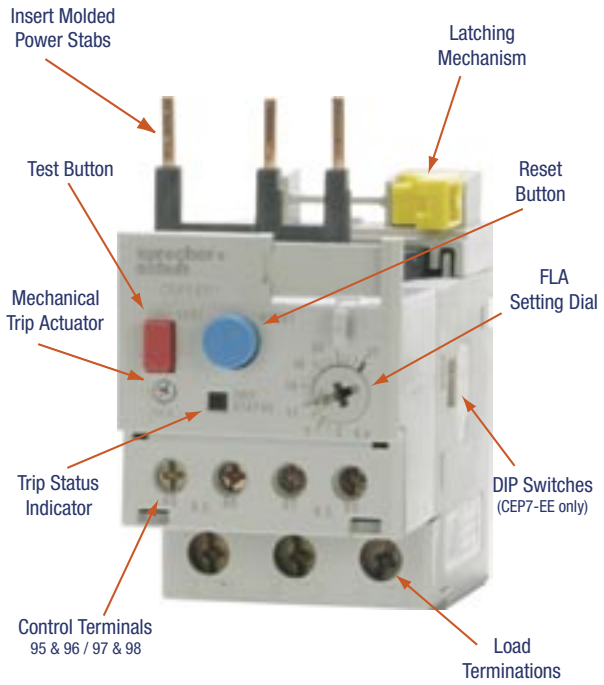

Fewer units means greater application flexibility

The new CEP7 is available in three basic models:

- CEP7-ED1 is a Class 10, manual reset model available up to 27 amperes which covers the most common horsepower motors and your every day application. This model is economically priced to be competitive with adjustable bimetallic overload relays.
- CEP7-EE is full featured selectable trip class (10, 15, 20 & 30) 3-phase application overload relay. Provisioned for field mountable modules to handle remote reset, stall and other modules, previously available only in higher priced electronic overload relays. Manual reset or automatic reset can be selected with dip switches on the new CEP7-EE models.
- CEP7S-EE is a 1-phase application overload relay packing all features of the 3-phase CEP7-EE model.

Wide current adjustment range

Thermal or bimetallic overload relays typically have a small current adjustment range of 1.5:1 meaning that the maximum setting is generally 1.5 times the lower setting. The first generation of CEP7 caused the industry to take note of the flexibility when it introduced a 3.2:1 adjustment ratio. A wider adjustment range is the primary reason the industry has been turning to more specifications calling for electronic overload relay protection over thermal overload relays. Sprecher + Schuh, building on field experience, now introduces a CEP7 overload capable of adjustment to a maximum of five times the minimum set current. This dramatically reduces the number of units required on-hand to cover the full range of current settings up to 800 amperes.

Second Generation Advantage ...

- Selectable tripping class
- Choice of reset options
- More robust design
- Increased accuracy
- Improved motor protection
- Self-powered design
- Lowers energy requirements
- Saves money
- Reduces panel space
- Superior phase failure protection

sprecher+schuh

Second Generation CEP7 Solid State Overload Relays

Directly Mounted CEP7 Solid State Overload Relays, Manual Reset ❶❷❸❹

Overload Relay	Directly Mounts to Contactor… ❷	Adjustment Range (A)	Trip Class 10 Catalog Number
Manual Reset for 3Ø Applications ❶			
	CA7-9…CA7-23	0.1…0.5	**CEP7-ED1AB**
		0.2…1.0	**CEP7-ED1BB**
		1.0…5.0	**CEP7-ED1CB**
		3.2… 16	**CEP7-ED1DB**
		5.4…27	**CEP7-ED1EB**

Directly Mounted CEP7 Solid State Overload Relays, Automatic/Manual Reset ❶❷❸❹

Overload Relay	Directly Mounts to Contactor… ❷	Adjustment Range (A)	Adjustable Trip Class 10, 15, 20 & 30 Catalog Number
Automatic or Manual Reset for 3Ø Applications ❶			
	CA7-9…CA7-23	0.1…0.5	**CEP7-EEAB**
		0.2…1.0	**CEP7-EEBB**
		1.0…5.0	**CEP7-EECB**
		3.2… 16	**CEP7-EEDB**
		5.4…27	**CEP7-EEEB**
	CA7-30…CA7-43	1.0…5.0	**CEP7-EECD**
		3.2…16	**CEP7-EEDD**
		5.4…27	**CEP7-EEED**
		9…45	**CEP7-EEFD**
	CA7-60…CA7-85	5.4…27	**CEP7-EEEE**
		9…45	**CEP7-EEFE**
		18…90	**CEP7-EEGE**
Automatic or Manual Reset for 1Ø Applications ❶			
	CA7-9…CA7-23	1.0…5.0	**CEP7S-EEPB**
		3.2…16	**CEP7S-EERB**
		5.2…27	**CEP7S-EESB**
	CA7-30…CA7-43	9…45	**CEP7S-EETD**
	CA7-60…CA7-85	18…90	**CEP7S-EEUE**

Large Amp CEP7 Solid State Overload Relays, Automatic and Manual Reset ❶❷❸❹

Overload Relay	Directly Mounts to Contactor...❷	CT Ratio	Adjustment Range (A)	Selectable Trip Class Catalog Number
Automatic or Manual Reset for 3Ø Applications ❶❸				
	CA6-95...-180	150:5	30...150	**CEP7-EEHF**
		200:5	40...200	**CEP7-EEJF**
	CA6-210...-420	200:5	40...200	**CEP7-EEJG**
		300:5	60...300	**CEP7-EEKG**
		500:5	100...500	**CEP7-EELG**
	CA6-630...-860	600:5	120...600	**CEP7-EEMH**
		800:5	160...800	**CEP7-EENH**

Side Mount Remote Reset Modules

Typical

Catalog Number	Description	For use with…
CEP7-ERR	**Remote Reset Module** • Remote reset after trip	Side-mount to any CEP7-EE_ CEP7S-EE_
CEP7-EJM	**Jam Protection and Remote Reset Module** • Dip switch adjustable Jam Protection • Remote reset after trip	
CEP7-EGF	**Ground Fault Protection and Remote Reset Module** • Adjustable Ground Fault Protection • LED status indication • Remote reset after trip	Side-mount to any CEP7-EE_ CEP7S-EE_
CEP7-EGJ	**Ground Fault/Jam Protection and Remote Reset Module** • Adjustable Ground Fault Protection • Excessive FLA Jam trip • LED status indication • Remote reset after trip	Must use with CEP7-CBCT_ Current Sensor
CEP7-EPT	**PTC Thermistor Relay and Remote Reset Module** • PTC Protection and LED Status • Remote reset after trip	Side-mount to any CEP7-EE_ CEP7S-EE_

❶ 3-phase CEP7 units are only designed for 3Ø applications. Single phase CEP7S units are only designed for single phase applications.

❷ This reference is not intended to be a guide for selecting contactors. Size overload relays using the full load current of the motor.

❸ The reset time of a CEP7 set in the automatic mode is approximately 180 seconds.

❹ CEP7 overload relays do not work with Variable Frequency Drives, DC Applications or Softstarters with braking options.

Sprecher + Schuh US Division Headquarters
15910 International Plaza Dr., Houston, TX 77032
Tel: (281) 442-9000; Fax: (800) 739-7370
www.sprecherschuh.com

Sprecher + Schuh Canadian Division
3610 Nashua Dr., Unit 10, Mississauga, Ontario L4V 1L2
Tel: (905) 677-7514; Fax: (905) 677-7663

Publication No: F-CEP7II-0207 3/07

UL fuse holders: USCC

Electrical characteristics

Nominal Voltage Ui AC/DC	Voltage Isolation Uimp	Nominal Current	Max. power losses in the fuse links	Fuse links rating	Maxi RMS* Current for 1,2, 3 and 3+N poles with FS fuse links For 4, 5 and 6 poles x by 0.9 For 7, 8, 9 poles x 0.8 For ≥ 10 poles x by 0,7			Cable wire section (mm^2) recommanded
					ATDR	ATM	ATMR	
600V AC	6 kV	30 A	3 W	≤20	20	20	20	2.5
600V AC	6 kV	30 A	3 W	25	25	25	25	4
600V AC	6 kV	30 A	3 W	30	30	30	30	6

ULTRASAFE™ Fuse holders for Class CC fuse links

ULTRASAFE™ Fuse holder without fuse light melting indicator

Nb of Pole	Cat. Number	Ref. Number	Nb of Mode (17.5mm)	Pack	Sur Condi
1	**USCC1**	H305033	1	12	
2	**USCC2**	K305035	2	6	
3	**USCC3**	L305036	3	4	
4	**USCC4**	N305038	4	3	
2	**USCC1N**	J305034	2	6	
4	**USCC3N**	M305037	4	3	

ULTRASAFE™ Fuse holder with fuse light melting indicator

Nb of Pole	Cat. Number	Ref. Number	Nb of Mode (17.5mm)	Pack	Sur Condi
1	**USCC1I**	P305039	1	12	
2	**USCC2I**	R305041	2	6	
3	**USCC3I**	S305042	3	4	
4	**USCC4I**	V305044	4	3	
2	**USCC1NI**	Q305040	2	6	
4	**USCC3NI**	T305043	4	3	

Accessories

Description	Cat. Number	Ref. Number	Nb of Mod. (17.5 mm)	Maxi. RMS current (A)	Number of Poles	Pack	Sur Condi
Kit for Multi-Phase connection links	**CMS810PAK**	Z233725				12	
Lock	**LOCK**	M223525				1	
Tag and lockout	**TAGLOCKCMS810**	A235773				1	
jumping bars 1 phase size 8/10 *	**CMS810BB1F13**	T210306	13	63	1	10	
jumping bars 2 phases size 8/10 *	**CMS810BB2F6**	V210307	6	63	2	10	
jumping bars 3 phases size 8/10 *	**CMS810BB3F4**	W210308	4	100	3	10	
jumping bars 4 phases size 8/10 *	**CMS810BB4F3**	X210309	3	100	4	10	
1 phase lateral incoming power supply	**TBB1C**	E210316		90		50	
2 & 3 phases lateral incoming power supply	**TBB23C**	G210318		90		50	
1 phase axial incoming power supply	**TBB1A**	D210315		90		50	
2 & 3 phases axial incoming power supply	**TBB23A**	F210317		90		50	

*Note *: It is possible to use a rigid cable 16 mm² with a jumping bar 1.5 mm thick.*

ATQR

TIME DELAY/CLASS CC

TAKE *CONTROL* OF FAULT CURRENTS HEADED FOR YOUR *CONTROL* TRANSFORMER

ATQR small-dimension fuses feature time delay characteristics ideally suited for the high inrush currents of control transformers, solenoids, and similar inductive loads. The newest member of our Amp-trap 2000® family of fuses - ATQR fuses provide superior protection for the branch circuits of electrical distribution systems.

Features/Benefits

- **Time delay** for control transformer inrush loads without nuisance opening
- **Highly current limiting** for low peak let-thru current
- **Rejection-style design** prevents replacement errors (when used with recommended fuse blocks)
- **High-visibility orange label** ensures instant recognition, and simplifies replacement
- **Metal-embossed date and catalog number** for traceability and lasting identification
- **Fiberglass body** provides dimensional stability in harsh industrial settings
- **High-grade silica filler** ensures fast arc quenching and high current limitation

HIGHLIGHTS:

- Time Delay
- Best Choice for Small Transformer Protection
- Most Current-Limiting

APPLICATIONS:

- Control Transformers
- Solenoids
- Inductive Loads
- Lighting, Heating & General-purpose Loads

Ratings

- **AC:** 1/10 to 30A 600VAC, 200kA I.R.
- **DC:** 1/10 to 30A300VDC, 100kA I.R.

Approvals

- UL Listed to Standard 248-4
- DC Listed to UL Standard 248
- CSA Certified to Standard C22.2 No. 248.4

TIME DELAY/CLASS CC FUSES

Standard Fuse Ampere Ratings, Catalog Numbers

AMPERE RATING	CATALOG NUMBER	AMPERE RATING	CATALOG NUMBER	AMPERE RATING	CATALOG NUMBER	AMPERE RATING	CATALOG NUMBER
1/10	ATQR1/10	8/10	ATQR8/10	2-8/10	ATQR2-8/10	7-1/2	ATQR7-1/2
1/8	ATQR1/8	1	ATQR1	3	ATQR3	8	ATQR8
3/16	ATQR3/16	1-1/8	ATQR1-1/8	3-2/10	ATQR3-2/10	9	ATQR9
2/10	ATQR2/10	1-1/4	ATQR1-1/4	3-1/2	ATQR3-1/2	10	ATQR10
1/4	ATQR1/4	1-4/10	ATQR1-4/10	4	ATQR4	12	ATQR12
3/10	ATQR3/10	1-1/2	ATQR1-1/2	4-1/2	ATQR4-1/2	15	ATQR15
4/10	ATQR4/10	1-6/10	ATQR1-6/10	5	ATQR5	17-1/2	ATQR17-1/2
1/2	ATQR1/2	1-8/10	ATQR1-8/10	5-6/10	ATQR5-6/10	20	ATQR20
6/10	ATQR6/10	2	ATQR2	6	ATQR6	25	ATQR25
3/4	ATQR3/4	2-1/4	ATQR2-1/4	6-1/4	ATQR6-1/4	30	ATQR30
		2-1/2	ATQR2-1/2	7	ATQR7		

Recommended ATQR Class CC Primary Fuses For Single Phase Control Transformers

TRANS VA	PRIMARY VOLTS	PRIMARY FLA	ATQR AMPS
25	600	0.04	1/10
	480	0.05	1/10
	240	0.10	2/10
	208	0.12	1/4
	120	0.21	4/10
50	600	0.08	1/4
	480	0.10	1/4
	240	0.21	4/10
	208	0.24	1/2
	120	0.42	6/10
75	600	0.13	1/4
	480	0.16	3/10
	240	0.31	1/2
	208	0.36	3/4
	120	0.63	1
100	600	0.17	3/10
	480	0.21	4/10
	240	0.42	6/10
	208	0.48	1
	120	0.83	1-1/2
150	600	0.25	1/2
	480	0.31	1/2
	240	0.63	1
	208	0.72	1-1/2
	120	1.25	2-1/2
200	600	0.33	1/2
	480	0.42	6/10
	240	0.83	1-1/2
	208	0.96	2
	120	1.67	3
250	600	0.42	6/10
	480	0.52	1-1/8
	240	1.04	2
	208	1.2	3
	120	2.08	4*

TRANS VA	PRIMARY VOLTS	PRIMARY FLA	ATQR AMPS
300	600	0.50	1-1/8
	480	0.63	1-1/2
	240	1.25	2-1/2
	208	1.44	3
	120	2.5	5*
500	600	0.83	1-1/2
	480	1.04	2
	240	2.08	4*
	208	2.40	6*
	120	4.17	10*
750	600	1.25	2-1/2
	480	1.56	3
	240	3.13	7*
	208	3.61	8*
	120	6.25	15*
1000	600	1.67	3
	480	2.08	4*
	240	4.16	10*
	208	4.81	12*
	120	8.33	20*
1500	600	2.50	5*
	480	3.13	7*
	240	6.25	10
	208	7.21	20*
	120	12.5	25*
2000	600	3.33	8*
	480	4.17	10*
	240	8.33	20++*
	208	9.62	20++*
3000	600	5.00	12+*
	480	6.25	15+*
	240	12.5	30++*
5000	600	8.33	20++*
	480	10.4	25+*

Dimensions

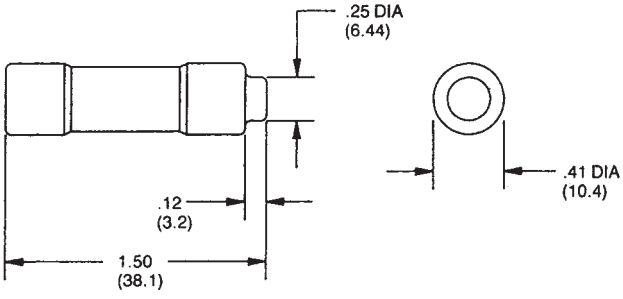

Recommended Fuse Blocks for Class CC Fuses

Number of Poles	ULTRASAFE™ Indicating Fuse Holder	Screw with Double Quick Connects	Pressure Plate with Double Quick Connects	Copper Box Connector
ADDER		30310R	30320R	30350R
1	USCC1I	30311R	30321R	30351R
2	USCC2I	30312R	30322R	30352R
3	USCC3I	30313R	30323R	30353R

Primary fuses - If primary FLA is less than 2 amps, fuse may be 300% max. (500% for motor control). If primary FLA exceeds 2 amps but is less than 9 amps, fuse may not exceed 167% of primary FLA unless secondary protection is used, when it may be increased to 250%. Fuse sizes shown are based on approx. 40 x FLA for .01 sec.

* Secondary protection is required for these ratings.
\+ Fuse will withstand 30 x FLA for .01 second
++ Fuse will withstand 25 x FLA for .01 second

NEW

GROUP B (CONTINUED)

240 X 480, 230 X 460, 220 X 440 PRIMARY VOLTS — 120/115/110 SECONDARY VOLTS — 1Ø, 50/60 Hz

CATALOG NO. ②	VA RATING	OUTPUT AMPS @ 120V	APPROX. DIMENSIONS INCHES (CM.) A	B	C	D	E	F	APPROX. SHIP WEIGHT LBS. (KG.)	PRIMARY FUSE BLOCK PART NO.	SECONDARY FUSE KIT ① PART NO.	SECONDARY FUSE SIZE 120 VOLTS
TA-2-81218	1500	12.50	8.80 (22.4)	6.75 (17.1)	5.72 (14.5)	5.75 (14.6)	5.75 (14.6)	.31 x .50 (0.8 x 1.3)	43 (19.5)	PL-112705	PL-112601	15 amps
TA-2-81219	2000	16.67	9.25 (23.5)	6.75 (17.1)	5.72 (14.5)	5.75 (14.6)	6.38 (16.2)	.31 x .50 (0.8 x 1.3)	49 (22.2)	PL-112705	PL-112601	20 amps
TA-2-81220	3000	25.00	8.81 (22.4)	7.50 (19.1)	8.34 (21.2)	6.50 (16.5)	7.52 (19.1)	.41 x .81 (1.0 x 2.1)	70 (31.8)	PL-112706	—	—
TA-2-81221	5000	41.67	7.52 (19.1)	11.92 (30.3)	9.49 (24.1)	6.75 (17.1)	6.25 (15.9)	.41 x .81 (1.0 x 2.1)	125 (56.7)	PL-112707	—	—

⋆ See fusing chart for secondary fuse kits.

Integrally Mounted Fuse Blocks Available:

(See Chart)

GROUP 'A' THROUGH 500 VA

GROUP 'B' THROUGH 1000 VA

ADD SUFFIX TO CATALOG NO.	CONFIGURATION
– F2	Factory installed integrally mounted 2-pole primary block
– F3	Factory installed integrally mounted 3-pole primary and secondary block (100 VA & larger)
– F4	Factory installed 2-pole primary block and secondary fuse clips (50 & 75 VA)

Consult factory for other sizes available.

GROUP C

240/480/600, 230/460/575, 220/440/550 PRIMARY VOLTS — 120/100, 115/95, 110/90 SECONDARY VOLTS — 1Ø, 50/60 Hz

CATALOG NO.	VA RATING	OUTPUT AMPS @ 120V	APPROX. DIMENSIONS INCHES (CM.) A	B	C	D	E	F	APPROX. SHIP WEIGHT LBS. (KG.)	PRIMARY FUSE BLOCK PART NO.	SECONDARY FUSE KIT ① PART NO.	SECONDARY FUSE SIZE 120 VOLTS
NEW TB-81000	50	0.42	4.56 (11.6)	3.00 (7.6)	2.70 (6.8)	2.50 (6.4)	2.61 (6.6)	.22 x .50 (0.6 x 1.3)	4 (1.8)	PL-112700	*	6/10 amp
NEW TB-81009	75	0.63	4.90 (12.4)	3.00 (7.6)	2.70 (6.8)	2.50 (6.4)	2.81 (7.1)	.22 x .50 (0.6 x 1.3)	4 (1.8)	PL-112700	*	1 amp
NEW TB-81001	100	0.83	5.36 (13.6)	3.00 (7.6)	2.70 (6.8)	2.50 (6.4)	3.26 (8.3)	.22 x .50 (0.6 x 1.3)	5 (2.3)	PL-112700	*	1 1/4 amps
NEW TB-81002	150	1.25	5.00 (12.7)	3.75 (9.5)	3.40 (8.6)	3.13 (8.0)	3.06 (7.8)	.22 x .50 (0.6 x 1.3)	7 (3.2)	PL-112701	*	2 amps
NEW TB-81003	250	2.08	5.57 (14.1)	4.50 (11.4)	3.84 (9.8)	3.75 (9.5)	3.50 (8.9)	.22 x .50 (0.6 x 1.3)	11 (5.0)	PL-112702	*	3 2/10 amps
NEW TB-81020	300	2.50	6.48 (16.5)	4.65 (11.8)	4.15 (10.5)	4.06 (10.3)	4.06 (10.3)	.22 x .50 (0.6 x 1.3)	15 (6.8)	PL-112702	*	4 amps
NEW TB-81004	350	2.92	6.48 (16.5)	4.65 (11.8)	4.15 (10.5)	4.06 (10.3)	4.06 (10.3)	.22 x .50 (0.6 x 1.3)	15 (6.8)	PL-112702	*	4 1/2 amps
NEW TB-81005	500	4.17	6.43 (16.3)	5.25 (13.3)	4.47 (11.4)	4.38 (11.1)	4.56 (11.6)	.31 x .50 (0.8 x 1.3)	21 (9.5)	PL-112704	*	6 1/4 amps
NEW TB-81006	750	6.25	7.19 (18.3)	6.75 (17.1)	5.78 (14.7)	5.75 (14.6)	3.81 (9.7)	.31 x .50 (0.8 x 1.3)	25 (11.3)	PL-112705	*	10 amps
NEW TB-81007	1000	8.33	7.96 (20.2)	6.75 (17.1)	5.78 (14.7)	5.75 (14.6)	4.63 (11.8)	.31 x .50 (0.8 x 1.3)	32 (14.5)	PL-112705	*	12 amps
TA-2-81008	1500	12.50	9.46 (24.0)	6.75 (17.1)	5.72 (14.5)	5.75 (14.6)	6.38 (16.2)	.31 x .50 (0.8 x 1.3)	47 (21.3)	PL-112705	PL-112601	15 amps
TA-2-53929	2000	16.67	7.90 (20.1)	7.50 (19.1)	7.66 (19.5)	6.50 (16.5)	6.57 (16.7)	.41 x .81 (1.0 x 2.1)	55 (24.9)	PL-112706	PL-112601	20 amps
TA-2-53930	3000	25.00	7.02 (17.8)	11.92 (30.3)	8.83 (22.4)	6.75 (17.1)	5.75 (14.6)	.41 x .81 (1.0 x 2.1)	75 (34.0)	PL-112707	—	—
TA-2-53931	5000	41.67	7.52 (19.1)	11.92 (30.3)	9.49 (24.1)	6.75 (17.1)	6.25 (15.9)	.41 x .81 (1.0 x 2.1)	110 (49.9)	PL-112707	—	—

⋆ See fusing chart for secondary fuse kits.

① Secondary Fuse Kit PL-112603 may be substituted for PL-112600 thru PL-112602 when Primary Fuse Kit is used. See page 71.
② See chart for integrally mounted fuse block catalog number suffix.

Tripp Lite
1111 West 35th Street
Chicago, IL 60609 USA
Telephone: +(773) 869 1234
E-mail: saleshelp@tripplite.com

Model #: SU1000RTXL2UA

SmartOnline 1kVA On-Line Double-Conversion UPS, 2U Rack/Tower, 100/110/120V NEMA outlets

Highlights

- 1000VA / 1kVA / 800 watt on-line double-conversion 2U rack/tower UPS
- 100/110/120V +/-2% output at 50/60Hz, high efficiency economy mode option
- Expandable runtime, Hot-swap batteries; 13.5 in / 34.3cm installed depth
- USB, RS232 & EPO ports; support for SNMP/WEB card options
- Front panel status LEDs with detailed load and battery metering
- 2 independently switchable output load banks
- NEMA 5-15P input; 5-15R outlets

Description

1000VA on-line, double-conversion UPS system for critical server, network and telecommunications equipment. 2U rackmount form factor with an installed depth of only 13.5 inches. Extended runtime available with optional BP24V15RT2U (limit 1), BP24V28-2U (limit 1) or BP24V70-3U (multi-pack compatible) external battery packs. Full-time sine wave 100, 110 or 120V output with +/-2% voltage regulation. Online, double-conversion Uninterruptible Power Supply (UPS) actively converts raw incoming AC power to DC, then re-converts output back to completely regulated, filtered AC output. Operates continuously without using battery power during brownouts to 65V and overvoltages to 150V. Highly efficient operation in optional economy mode saves BTU heat output and energy costs. NEMA 5-15P input plug; NEMA 5-15R output receptacles. Network-grade AC surge and noise suppression. Zero transfer time between AC and battery operation. Network management interfaces support simultaneous communications via USB port, DB9 serial port and SNMPWEBCARD slot. Built-in DB9 port offers both enhanced RS-232 enabled monitoring data, plus contact closure monitoring ability. HID-compliant USB interface enables integration with built-in power management and auto shutdown features of Windows and Mac OS X.Supports simultaneous detailed monitoring of equipment load levels, self-test data and utility power conditions via all 3 network interfaces. Includes PowerAlert monitoring software and complete cabling. Emergency Power Off (EPO) interface. Integrated two-bank PDU switching supports load shedding and remote reboot of connected equipment. 3-stage metered current monitoring and battery charge status LEDs. LED display panel easily rotates for viewing in rackmount or tower configurations. Dataline surge suppression for dialup, DSL or network Ethernet connection. Utility power and voltage regulation LEDs. Audible alarm. Self-test. Fault-tolerant auto-bypass mode. 4-post rackmount accessories included; 2-9USTAND tower kit and 2POSTRMKITWM 2-post rack & wallmount accessories available. Field-replaceable, hot-swappable internal batteries and external battery packs. Attractive all-black color scheme. 2-year warranty and $250,000 connecte connected equipment insurance; extended warranty and service contracts available.

Package Includes

- SU1000RTXL2Ua Online Double-Conversion UPS System
- PowerAlert Software and cabling
- Mounting hardware for 4 post rack enclosures
- Instruction manual

Features

- SmartOnline high performance UPS system is ideal for critical voice, data, medical and industrial network applications
- True on-line, double-conversion UPS provides perfectly regulated sine wave output within 2% of 100/110/120V (user selectable) under all

usage conditions
- Maintains continuous operation through blackouts, voltage fluctuations and surges with zero transfer time
- Highly efficient operation in optional economy mode setting, saving BTU heat output and energy costs
- Removes harmonic distortion, fast electrical impulses, frequency variations and other hard to solve power problems not addressed by other UPS types
- Corrects line voltage conditions as low as 65V and as high as 150V back to selectable 100/110/120V (+/-2%) values
- Standard internal battery set offers 14 minutes runtime at half load (400W) and 4.5 minutes at full load (800W)
- Extended runtime available with optional BP24V15RT2U (limit 1), BP24V28-2U (limit 1) or BP24V70-3U (no limit) external battery packs
- Compact rackmount form factor installs using only 2 rack spaces (2U) with a maximum installed depth of only 13.5 inches
- Ships with all mounting accessories for 4 post rackmount installation
- Optional 2POSTRMKITWM enables 2 post rackmount or wallmount installation
- Optional 2-9USTAND accessory enables small-footprint upright tower placement
- Fault tolerant electronic bypass maintains utility output during a variety of UPS fault conditions
- Network interfaces support simultaneous communications via built-in USB, DB9 serial / contact-closure and SNMPWEBCARD slot
- HID-compliant USB interface enables integration with built-in power management and auto shutdown features of Windows and Mac OS X
- Included PowerAlert UPS monitoring software supports safe unattended shutdown, monitoring and control via local connected servers, plus any number of additional servers over IP
- UPS interface supports on-battery, low-battery, power-restored, AC-voltage, DC-voltage, output current monitoring, battery charge current, battery capacity, AC line frequency, timed inverter shutoff, activate self-test, load bank output power control and remote reboot, UPS nominal voltage adjustment and UPS line to battery power voltage set points
- Built-in Emergency Power Off (EPO) interface with cable
- NEMA 5-15P input plug/NEMA 5-15R output receptacles
- Integrated 2 bank switched PDU enables remote outlet management for load shedding or remote reboot of individual devices (each load bank consists of one outlet)
- Front panel LEDs offer current monitoring and battery charge level information
- UPS ships fully assembled in full compliance with DOT regulations, no time consuming connection of internal batteries by user required
- Single line TEL/DSL or network Ethernet line surge suppression
- 2 year manufacturer's product warranty, $250,000 Ultimate Lifetime Insurance

Specifications

OUTPUT	
Output Volt Amp Capacity (VA)	1000
Output kVA capacity (kVA)	1
Output Watt Capacity (watts)	800
Output power factor	0.8
Crest Factor	3:1
Nominal Output Voltage(s) Supported	100V; 110V; 120V
Nominal Voltage details	120V default
Frequency compatibility	50 / 60 Hz
Frequency compatibility details	Output frequency matches input nominal on startup, defaults to 60 Hz on cold-start
Output voltage regulation (line mode)	+/- 2%
Output voltage regulation (Economy line mode)	+/- 10%

Output voltage regulation (Battery mode)	+/- 2%
Built-in UPS output receptacles	6 5-15R outlet(s)
Built-in controllable switched load banks	Two switchable single-outlet 5-15R load banks
Output AC waveform (AC mode)	Sine wave
Output AC waveform (battery mode)	Pure Sine wave
INPUT	
Rated input current (at maximum load)	8.6A
Nominal Input Voltage(s) Supported	100V AC; 110V AC; 120V AC
UPS input connection type	5-15P
Input circuit breaker	15A
UPS Input cord length (ft.)	10
UPS Input cord length (m)	3
Recommended Electrical Service	15A 120V
BATTERY	
Full load runtime (minutes)	4.5 min. (800w)
Half load runtime (minutes)	14 min. (400w)
Expandable battery runtime	Extended runtime supported via optional external battery packs
External battery pack compatibility	BP24V15RT2U (limit 1); BP24V28-2U (limit 1); BP24V70-3U (multi-pack compatible)
DC system voltage (VDC)	24
Battery recharge rate (included batteries)	Less than 6 hours from 10% to 80%
Replacement battery cartridge (internal UPS battery replacement)	RBC92-2U
Battery Access	Front panel battery access door
Battery replacement description	Hot-swappable, user replaceable batteries
VOLTAGE REGULATION	
Voltage regulation description	Online, double-conversion power conditioning

Overvoltage correction	2% output voltage regulation during overvoltages to 150
Undervoltage correction	2% output voltage regulation during undervoltages to 80
Severe undervoltage correction	2% output voltage regulation during undervoltages to 65 (under 70% load only)
LEDS ALARMS & SWITCHES	
LED Indicators	14 LEDs indicate line power, online mode, economy/bypass mode, on-battery, overload, battery low, replace battery and fault status information; 4-LED meter displays load and battery charge levels; LED panel rotates for viewing in rack/tower formats
Alarms	Audible alarm indicates UPS startup, power-failure, low-battery, overload, UPS fault and remote shutdown conditions
Alarm cancel operation	Power-fail alarm can be silenced using alarm-cancel switch
Switches	2 switches control off/on power status and alarm-cancel/self-test operation
SURGE / NOISE SUPPRESSION	
UPS AC suppression joule rating	510
UPS AC suppression response time	Instantaneous
UPS Dataline suppression	1 line TEL/DSL (1 in / 1 out); 10/100Base T Ethernet
EMI / RFI AC noise suppression	Yes
PHYSICAL	
Installation form factors supported with included accessories	4 post 19 inch rackmount (mounting rail kit included)
Installation form factors supported with optional accessories	2 post rackmount (2POSTRMKITWM); Wallmount (2POSTRMKITWM); Tower (2-9USTAND)
Primary form factor	Rackmount
UPS / Power Module dimensions in primary form factor (height x width x depth / inches)	3.5 x 17.5 x 13.5
UPS / Power Module dimensions in primary form factor (height x width x depth / cm)	8.9 x 44.4 x 34.3
Installed whole system total rack space height (rack spaces)	2U
Secondary form factor	Tower (requires 2-9USTAND)
UPS / Power Module weight (lbs)	29

UPS / Power Module weight (kg)	13.2
UPS Shipping dimensions (height x width x depth / inches)	9.5 x 20 x 24
UPS Shipping dimensions (height x width x depth / cm)	24.1 x 50.8 x 61
Shipping weight (lbs)	41
Shipping weight (kg)	18.6
UPS housing material	Steel
Cooling method	Fan
ENVIRONMENTAL	
Operating Temperature Range	+32 to +104 degrees Fahrenheit / 0 to +40 degrees Celsius
Storage Temperature Range	+5 to +122 degrees Fahrenheit / -15 to +50 degrees Celsius
Relative Humidity	0 to 95%, non-condensing
AC mode BTU / hr. (full load)	406.4
AC economy mode BTU / hr. (full load)	173.6
Battery mode BTU / hr. (full load)	442.8
AC economy mode efficiency rating (100% load)	94%
COMMUNICATIONS	
Communications interface	USB (HID enabled); DB9 Serial; Contact closure; EPO (emergency power off); Slot for SNMP/Web interface
Network monitoring port description	Supports detailed monitoring of UPS and site power conditions; DB9 port supports RS232 and contact closure communications
PowerAlert software	Included
Communications cable	USB and DB9 cabling included
WatchDog compatibility	Supports Watchdog application, OS and hard-reboot restart options for remote applications
LINE / BATTERY TRANSFER	
Transfer time	No transfer time (0 ms.) in online, double-conversion mode
Low voltage transfer to battery power (setpoint)	80V (100% load), 65V (
High voltage transfer to battery power (setpoint)	150
SPECIAL FEATURES	

Cold Start (startup in battery mode during a power failure)	Cold-start operation supported
High availability UPS features	Automatic inverter bypass; Hot swappable batteries
Green & high efficiency features	High efficiency economy mode operation; Individually controllable load banks; Schedulable daily hours of economy mode operation
CERTIFICATIONS	
UPS Certifications	Tested to UL1778 (USA); Tested to CSA (Canada); Meets FCC Part 15 Category B (EMI)
WARRANTY	
Product Warranty Period (U.S., Canada & Puerto Rico)	2-year limited warranty
Connected Equipment Insurance (U.S., Canada & Puerto Rico)	$250,000 Ultimate Lifetime Insurance

Related Items

Optional Products

Product Type	Related Model	Description	Qty.
Extended Warranties	WEXT3-500-1500	3-Year Extended Warranty - For Smart Line-Interactive and Online Tower or Rack models, 1500VA or less	1
Extended Warranties	WEXT5-500-1500	5-Year Extended Warranty - For Smart Line-Interactive and Online Tower or Rack models, 1500VA or less	1
External Battery Packs	BP24V15RT2U	BP24V15RT2U - External Battery Pack for UPS System	1
External Battery Packs	BP24V28-2U	BP24V28-2U - External Battery Pack for UPS System	1
External Battery Packs	BP24V70-3U	BP24V70-3U - External Battery Pack for UPS System	1
Power Distribution	PDUB15	Dual source Power Distribution Unit / PDU with Manual Transfer Switch enables Hot-swappable UPS Replacement in Critical Network Applications	1
Power Distribution	PDUMH15AT	Metered PDU with ATS - Power Distribution Unit with dual-input Auto Transfer Switching	1
Power Distribution	PDUMNV15	Monitored PDU / Power Distribution Unit supports real-time remote monitoring of load level, voltage and frequency with options for remote environmental and security monitoring	1
Power Distribution	PDUMV15	Metered PDU / Power Distribution Unit - Safe, reliable power distribution with digital current meter	1
Power Distribution	PDUMV15NET	Switched, Metered PDU with Remote Monitoring - 0U Vertical Rackmount Power Distribution Unit for Networks with Individually Switchable Outlets, Current Metering, Remote Monitoring and Control	1
Rackmount/Wallmount Kits	2POSTRMKITWM	Enables 2-Post Rackmount or Wallmount Installation of Select Rackmount UPS Systems	1
Shutdown Cable Kits	AS400CABLE KIT	Power Management Tools - UPS Communication Cable Kit for System i / AS400 / iSeries Servers	1
SNMP Accessories	ENVIROSENSE	Monitors temperature, humidity and contact-closure inputs. (Requires SNMPWEBCARD or switched PDU.)	1
SNMP Accessories	SNMPWEBCARD	For remote monitoring and control via SNMP, Web, or Telnet.	1
SNMP Accessories	SRSWITCH	Magnetic Door Switch Kit for front and rear doors; requires ENVIROSENSE	1

Tower Stands	2-9USTAND	Enables Tower Placement of Rackmount UPS Systems	1
UPS Accessories	MODBUSCARD	For remote monitoring and control via MODBUS protocol	1
UPS Accessories	RELAYIOCARD	Programmable Relay I/O Card	1

More information, including related products, owner's manuals, and additional technical specifications, can be found online at www.tripplite.com/en/products/model.cfm?txtModelID=2948.

Copyright © 2011 Tripp Lite. All rights reserved. All trademarks are the sole property of their respective owners. Tripp Lite has a policy of continuous improvement. Specifications are subject to change without notice. Photos may differ slightly from final products.

Trip Characteristic C (5~10 x I_N) – *Inductive loads*

❶ UL/CSA Max. Volt.	Rated Current (A)	1 Pole ❷			2 Pole ❸			3 Pole		
		Catalog Number	Price	Std. Pkg.	Catalog Number	Price	Std. Pkg.	Catalog Number	Price	Std. Pkg.
480Y/277	0.5	L9-.5/1/C	97	2	L9-.5/2/C	185	1	L9-.5/3/C	251	1
	1	L9-1/1/C	97	2	L9-1/2/C	185	1	L9-1/3/C	251	1
	1.5	L9-1.5/1/C	97	2	L9-1.5/2/C	185	1	L9-1.5/3/C	251	1
	2	L9-2/1/C	97	2	L9-2/2/C	185	1	L9-2/3/C	251	1
	3	L9-3/1/C	97	2	L9-3/2/C	185	1	L9-3/3/C	251	1
	4	L9-4/1/C	97	2	L9-4/2/C	185	1	L9-4/3/C	251	1
	5	L9-5/1/C	97	2	L9-5/2/C	185	1	L9-5/3/C	251	1
	6	L9-6/1/C	97	2	L9-6/2/C	185	1	L9-6/3/C	251	1
	7	L9-7/1/C	97	2	L9-7/2/C	185	1	L9-7/3/C	251	1
	8	L9-8/1/C	97	2	L9-8/2/C	185	1	L9-8/3/C	251	1
	10	L9-10/1/C	97	2	L9-10/2/C	185	1	L9-10/3/C	251	1
	13	L9-13/1/C	97	2	L9-13/2/C	185	1	L9-13/3/C	251	1
	15	L9-15/1/C	97	2	L9-15/2/C	185	1	L9-15/3/C	251	1
	16	L9-16/1/C	97	2	L9-16/2/C	185	1	L9-16/3/C	251	1
	20	L9-20/1/C	97	2	L9-20/2/C	185	1	L9-20/3/C	251	1
	25	L9-25/1/C	107	2	L9-25/2/C	198	1	L9-25/3/C	251	1
240	30	L9-30/1/C	110	2	L9-30/2/C	211	1	L9-30/3/C	279	1
	32	L9-32/1/C	110	2	L9-32/2/C	211	1	L9-32/3/C	279	1
	35	L9-35/1/C	110	2	L9-35/2/C	211	1	L9-35/3/C	279	1
	40	L9-40/1/C	115	2	L9-40/2/C	227	1	L9-40/3/C	292	1

L9 Miniature Circuit Breaker Features:

- UL-489 listed for Branch Circuit protection and CSA 22.2 No. 5.1 Approved
- Thermal magnetic protection
- Trip characteristic based on 40°C ambient for UL/CSA
- 10kA interrupting rating
- All ratings are HACR rated (SWD rated up to 20 A)
- Finger safe design (front)
- DIN rail mounting

❶ Rated 415V AC, 48V DC, IEC max/min meets IEC 60947-2 for miniature circuit breakers.
❷ 1-Pole 277V AC, 48V DC 0.5…25A; 240V AC, 48V DC 30…40A
❸ 2-Pole (series) 96VDC 0.5...40A

Trip Characteristic D (10~20 x I_N) – *Highly inductive loads*

❶ UL/CSA Max. Volt.	Interrupt Rating (kA)	Rated Current (A)	1 Pole ❷			2 Pole ❸			3 Pole		
			Catalog Number	Price	Std. Pkg.	Catalog Number	Price	Std. Pkg.	Catalog Number	Price	Std. Pkg.
480Y/277	10	0.5	L9-.5/1/D	97	2	L9-.5/2/D	186	1	L9-1.5/3/D	256	1
		1	L9-1/1/D	97	2	L9-1/2/D	186	1	L9-1/3/D	256	1
		1.5	L9-1.5/1/D	97	2	L9-1.5/2/D	186	1	L9-1.5/3/D	256	1
		2	L9-2/1/D	97	2	L9-2/2/D	186	1	L9-2/3/D	256	1
		3	L9-3/1/D	97	2	L9-3/2/D	186	1	L9-3/3/D	256	1
		4	L9-4/1/D	97	2	L9-4/2/D	186	1	L9-4/3/D	256	1
		5	L9-5/1/D	97	2	L9-5/2/D	186	1	L9-5/3/D	256	1
		6	L9-6/1/D	97	2	L9-6/2/D	186	1	L9-6/3/D	256	1
		7	L9-7/1/D	97	2	L9-7/2/D	186	1	L9-7/3/D	256	1
		8	L9-8/1/D	97	2	L9-8/2/D	186	1	L9-8/3/D	256	1
		10	L9-10/1/D	97	2	L9-10/2/D	186	1	L9-10/3/D	256	1
	14	13	L9-13/1/D	97	2	L9-13/2/D	186	1	L9-13/3/D	256	1
		15	L9-15/1/D	97	2	L9-15/2/D	186	1	L9-15/3/D	256	1
		16	L9-16/1/D	97	2	L9-16/2/D	186	1	L9-16/3/D	256	1
		20	L9-20/1/D	97	2	L9-20/2/D	186	1	L9-20/3/D	256	1
	10	25	L9-25/1/D	107	2	L9-25/2/D	199	1	L9-25/3/D	285	1
		30	L9-30/1/D	110	2	L9-30/2/D	199	1	L9-30/3/D	285	1
		32	L9-32/1/D	110	2	L9-32/2/D	199	1	L9-32/3/D	285	1
240	10	35	L9-35/1/D	115	2	L9-35/2/D	199	1	L9-35/3/D	285	1
		40	L9-40/1/D	115	2	L9-40/2/D	212	1	L9-40/3/D	310	1

L9 Miniature Circuit Breaker Features:

- UL-489 listed for Branch Circuit protection and CSA 22.2 No. 5.1 Approved
- Thermal magnetic protection
- Trip characteristic based on 40°C ambient for UL/CSA
- Interrupting rating up to 14kA
- All ratings are HACR rated (SWD rated up to 20 A)
- Finger safe design (front)
- DIN rail mounting

❶ Rated 415V AC, 48V DC, IEC max/min meets IEC 60947-2 for miniature circuit breakers.
❷ 1-Pole 277V AC 0.5…32A, 240V AC 35…40A, 48V DC 0.5…40A
❸ 2-Pole (series) 96V DC 0.5...40A

RH Series Compact Power Relays

SPDT through 4PDT, 10A contacts
Compact power type relays

The RH series are miniature power relays with a large capacity. The RH relays feature 10A contact capacity as large as the RR series but in a miniature package. The compact size saves space.

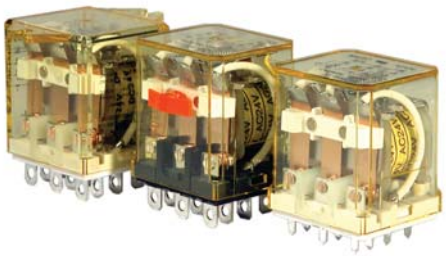

Part Number Selection

Contact	Model	Part Number: Blade Terminal	Part Number: PCB Terminal	Coil Voltage Code (Standard Stock in bold)
SPDT	Basic	RH1B-U	RH1V2-U	AC6V, AC12V, **AC24V**, AC110V, **AC120V**, AC220V, **AC240V** DC6V, **DC12V**, **DC24V**, DC48V, DC110V
	With Indicator	RH1B-UL	—	
	With Check Button	RH1B-UC	—	
	With Indicator and Check Button	RH1B-ULC	—	
	Top Bracket Mounting	RH1B-UT	—	
	With Diode (DC coil only)	RH1B-UD	RH1V2-UD	DC6V, **DC12V**, **DC24V**, DC48V, DC110V
	With Indicator and Diode (DC coil only)	RH1B-ULD	—	**DC12V**, **DC24V**, DC48V, DC110V
DPDT	Basic	RH2B-U	RH2V2-U	AC6V, AC12V, **AC24V**, **AC110-120V**, **AC220-240V** DC6V, **DC12V**, **DC24V**, DC48V, DC100-110V
	With Indicator	RH2B-UL	RH2V2-UL	
	With Check Button	RH2B-UC	—	
	With Indicator and Check Button	RH2B-ULC	—	
	Top Bracket Mounting	RH2B-UT	—	
	With Diode (DC coil only)	RH2B-UD	RH2V2-UD	DC6V, **DC12V**, **DC24V**, DC48V, DC100-110V
	With Indicator and Diode (DC coil only)	RH2B-ULD	—	
3PDT	Basic	RH3B-U	RH3V2-U	AC6V, AC12V, **AC24V**, AC110V, **AC120V**, AC220V, **AC240V** DC6V, **DC12V**, **DC24V**, DC48V, DC110V
	With Indicator	RH3B-UL	RH3V2-UL	
	With Check Button	RH3B-UC	—	
	With Indicator and Check Button	RH3B-ULC	—	
	Top Bracket Mounting	RH3B-UT	—	
	With Diode (DC coil only)	RH3B-D*	RH3V2-D*	DC6V, DC12V, DC24V, DC48V, DC110V
	With Indicator and Diode (DC coil only)	RH3B-LD*	—	
4PDT	Basic	RH4B-U	RH4V2-U	AC6V, AC12V, **AC24V**, AC110V, **AC120V**, AC220V, **AC240V** DC6V, **DC12V**, **DC24V**, DC48V, DC110V
	With Indicator	RH4B-UL	RH4V2-UL	
	With Check Button	RH4B-UC	—	
	With Indicator and Check Button	RH4B-ULC	—	
	Top Bracket Mounting	RH4B-UT	—	
	With Diode (DC coil only)	RH4B-UD	RH4V2-UD	DC6V, DC12V, DC24V, DC48V, DC110V
	With Indicator and Diode (DC coil only)	RH4B-LD*	—	

1. *Carries no UL recognition mark.
2. PCB terminal relays are designed to mount directly to a circuit board without any socket.

Ordering Information
When ordering, specify the Part No. and coil voltage code:
(example) **RH3B-U** **AC120V**
Part No. — Coil Voltage Code

Sockets (for Blade Terminal Models)

Relays	Standard DIN Rail Mount [1]	Finger-safe DIN Rail Mount [1]	Through Panel Mount	PCB Mount
RH1B	SH1B-05	SH1B-05C	SH1B-51	SH1B-62
RH2B	SH2B-05	SH2B-05C	SH2B-51	SH2B-62
RH3B	SH3B-05	SH3B-05C	SH3B-51	SH3B-62
RH4B	SH4B-05	SH4B-05C	SH4B-51	SH4B-62

1. DIN Rail mount socket comes with two horseshoe clips. Do not use unless you plan to insert pullover wire spring. Replacement horseshoe clip part number is Y778-011.

Hold Down Springs & Clips

Appearance	Description	Relay	For DIN Mount Socket	For Through Panel & PCB Mount Socket	Min Order Qty
	Pullover Wire Spring	RH1B	SY2S-02F1 [2]	SY4S-51F1	10
		RH2B	SY4S-02F1 [2]		
		RH3B	SH3B-05F1 [2]		
		RH4B	SH4B-02F1 [2]		
	Leaf Spring (side latch)	RH1B, RH2B, RH3B, RH4B	SFA-202 [3]	SFA-302 [3]	20
	Leaf Spring (top latch)	RH1B, RH2B, RH3B, RH4B	SFA-101 [3]	SFA-301 [3]	

2. Must use horseshoe clip when mounting in DIN mount socket. Replacement horseshoe clip part number is Y778-011.
3. Two required per relay.

AC Coil Ratings

Voltage (V)	Rated Current (mA) ±15% at 20°C								Coil Resistance (Ω) ±10% at 20°C				Operation Characteristics (against rated values at 20°C)		
	AC 50Hz				AC 60Hz										
	SPDT	DPDT	3PDT	4PDT	SPDT	DPDT	3PDT	4PDT	SPDT	DPDT	3PDT	4PDT	Max. Continuous Applied Voltage	Pickup Voltage	Dropout Voltage
6	170	240	330	387	150	200	280	330	330	9.4	6.4	5.4	110%	80% maximum	30% minimum
12	86	121	165	196	75	100	140	165	165	39.3	25.3	21.2			
24	42	60.5	81	98	37	50	70	83	83	153	103	84.5			
110	9.6	—	18.1	21.6	8.4	—	15.5	18.2	18.2	—	2,200	1,800			
110-120	—	9.4-10.8	—	—	—	8.0-9.2	—	—	—	—	—	—			
120	8.6	—	16.4	19.5	7.5	—	14.2	16.5	16.5	—	10,800	7,360			
220	4.7	—	8.8	10.7	4.1	—	7.7	9.1	9.1	—	10,800	7,360			
220-240	—	4.7-5.4	—	—	—	4.0-4.6	—		—	18,820	—	—			
240	4.9	—	8.2	9.8	4.3	—	7.1	8.3	8.3	—	12,100	9,120			

DC Coil Ratings

Voltage (V)	Rated Current (mA) ±15% at 20°C				Coil Resistance (Ω) ±10% at 20°C				Operation Characteristics (against rated values at 20°C)		
	SPDT	DPDT	3PDT	4PDT	SPDT	DPDT	3PDT	4PDT	Max. Continuous Applied Voltage	Pickup Voltage	Dropout Voltage
6	128	150	240	250	47	40	25	24	110%	80% maximum	10% minimum
12	64	75	120	125	188	160	100	96			
24	32	36.9	60	62	750	650	400	388			
48	18	18.5	30	31	2,660	2,600	1,600	1,550			
100-110	—	8.2-9.0	—	—	—	12,250	—	—			
110	8	—	12.8	15	13,800	—	8,600	7,340			

Standard coil voltages are in **BOLD**.

TWTD Series — Full Size NEMA Pushbuttons

TWTD Series: Heavy duty switches built to last

Key features include:

- Variety of button sizes up to 2 9/16" (65mm)
- Rugged construction includes chrome plated zinc locking ring die cast zinc mounting threads, screw mounted contact blocks
- LED or incandescent illumination
- Transformer or full voltage
- Transparent contact windows
- Slow make, double break self-cleaning contacts
- Modular construction for maximum flexibility
- Double nickel plated terminal screws
- Available assembled or as sub-components
- NEMA 4x and IP65 watertight/oiltight panel
- Large M3.5 screw terminals with captive sems plate

The rugged series of TWTD switches offers both variety and durability in an attractive design.

With button sizes up to 2 9/16" (65mm), chrome plated zinc locking rings, die cast zinc mounting threads, steel anti-rotation rings, and self cleaning contacts, the TWTDs are here to stay.

The TWTD series also offers either LED or incandescent illumination in full voltage and transformer models.

Transparent contact windows allow the viewing of IDEC's self cleaning slow-make/slow-break contacts.

Regardless of your switching needs, the TWTD series provides the kind of long lasting, industrial strength quality you've come to expect from IDEC.

UL Listed
File No. E70646

File No. LR48366

Ref No. 117617MC

Certificate No.
2005010305145658

Pilot Lights (Assembled)

Assembled Pilot Lights

A P D 1 126 D N – R – ( )

Function
P: Pilot Light

Series Designation
D: TWTD Series

Lens Shape
1: Dome

Rated Operational Voltage (Primary)

Transformer Type	Full Voltage Type
126: 120V AC	99: Full Voltage
246: 240V AC	
486: 480V AC	

Lamp Voltage
(full voltage illuminated units only)
6V: 6V AC/DC
12V: 12V AC/DC
24V: 24V AC/DC
120V: 120V AC (LED only)
240V: 240V AC (LED only)

Lens Color Code
A: Amber
G: Green
R: Red
S: Blue
W: White
Y: Yellow

Lamp Type
Blank: Incandescent
D: LED

Use only when interpreting part numbers. Do not use for developing part numbers.

LED and Incandescent Pilot Lights

Style	Operating Voltage	Part Number	
		LED	Incandescent
Transformer Dome	120V AC 240V AC 480V AC	APD1126DN-② APD1246DN-② APD1486DN-②	APD1126N-② APD1246N-② APD1486N-②
Full Voltage Dome	—	APD199DN-②-③	APD199N-②-③

1. In place of ②, specify the Lens/LED Color Code.
2. In place of ③, specify the Full Voltage Code (lamp voltage).
3. Yellow pilot light comes with white LED.

② Lens Color Codes

Color	Code
Amber	A
Green	G
Red	R
Blue	S
White	W
Yellow	Y

③ Full Voltage Codes

Voltage	Code
6V AC/DC	6V
12V AC/DC	12V
24V AC/DC	24V
120V AC	120V
240V AC	240V (LED only)

Non-Illuminated Pushbuttons (Assembled)

Non-Illuminated Pushbuttons

Style		Contacts	Momentary	Maintained
Flush		1NO 1NC 1NO-1NC 2NO 2NC	ABD110N-① ABD101N-① ABD111N-① ABD120N-① ABD102N-①	AOD110N-① AOD101N-① AOD111N-① AOD120N-① AOD102N-①
Extended		1NO 1NC 1NO-1NC 2NO 2NC	ABD210N-① ABD201N-① ABD211N-① ABD220N-① ABD202N-①	AOD210N-① AOD201N-① AOD211N-① AOD220N-① AOD202N-①
Extended with Neoprene Boot†		1NO 1NC 1NO-1NC 2NO 2NC	ABPD210N-① ABPD201N-① ABPD211N-① ABPD220N-① ABPD202N-①	AOPD210N-① AOPD201N-① AOPD211N-① AOPD220N-① AOPD202N-①
Recessed		1NO 1NC 1NO-1NC 2NO 2NC	ABFD110N-① ABFD101N-① ABFD111N-① ABFD120N-① ABFD102N-①	AOFD110N-① AOFD101N-① AOFD111N-① AOFD120N-① AOFD102N-①
Extended with Full Shroud		1NO 1NC 1NO-1NC 2NO 2NC	ABFD210N-① ABFD201N-① ABFD211N-① ABFD220N-① ABFD202N-①	AOFD210N-① AOFD201N-① AOFD211N-① AOFD220N-① AOFD202N-①
ø 40mm Mushroom Head		1NO 1NC 1NO-1NC 2NO 2NC	ABD310N-① ABD301N-① ABD311N-① ABD320N-① ABD302N-①	AOD310N-① AOD301N-① AOD311N-① AOD320N-① AOD302N-①
ø 40mm Mushroom Head with Full Shroud		1NO 1NC 1NO-1NC 2NO 2NC	ABGD310N-① ABGD301N-① ABGD311N-① ABGD320N-① ABGD302N-①	AOGD310N-① AOGD301N-① AOGD311N-① AOGD320N-① AOGD302N-①
ø 65mm Jumbo Mushroom Head		1NO 1NC 1NO-1NC 2NO 2NC	ABD410N-① ABD401N-① ABD411N-① ABD420N-① ABD402N-①	AOD410N-① AOD401N-① AOD411N-① AOD420N-① AOD402N-①
ø 65mm Jumbo Mushroom Head with Shallow Shroud		1NO 1NC 1NO-1NC 2NO 2NC	ABGD410N-① ABGD401N-① ABGD411N-① ABGD420N-① ABGD402N-①	AOGD410N-① AOGD401N-① AOGD411N-① AOGD420N-① AOGD402N-①
ø 65mm Jumbo Mushroom Head With Deep Shroud		1NO 1NC 1NO-1NC 2NO 2NC	ABFD410N-① ABFD401N-① ABFD411N-① ABFD420N-① ABFD402N-①	AOFD410N-① AOFD401N-① AOFD411N-① AOFD420N-① AOFD402N-①

1. In place of ①, specify the Button Color Code.
2. For sub-assembly part numbers, see next page.
3. For accessories, see page 632.
4. †Neoprene boot available only in Black (B), Green (G), Red (R) and Yellow (Y).

① Button Color Codes

Color	Code
Black	B
Green	G
Red	R
Blue	S
Yellow	Y
White	W

1. 65mm Jumbo mushroom not available in white.
2. Neoprene boot is not available in blue or white.

E-Stops (Assembled)

E-Stop Switches

Style		Contacts	Part Number
ø 40mm Pushlock Turn Reset	Non-Illuminated	1NO 1NC 1NO-1NC 2NO 2NC	AVD310N-R* AVD301N-R* AVD311N-R* AVD320N-R* AVD302N-R*
ø 40mm Illuminated Pushlock Turn Reset	Full Voltage	1NO-1NC 2NO 2NC	AVLD39911⑤N-R-③* AVLD39920⑤N-R-③* AVLD39902⑤N-R-③*
	Transformer	1NO-1NC 2NO 2NC	AVLD3 ④ 11⑤N-R* AVLD3 ④ 20⑤N-R* AVLD3 ④ 02⑤N-R*
ø 40mm Push-Pull	Non-Illuminated	1NO 1NC 1NO-1NC 2NO 2NC	AYD310N-① AYD301N-① AYD311N-① AYD320N-① AYD302N-①
ø 40mm Push-Pull	Full Voltage	1NO-1NC 2NO 2NC	AYLD39911⑤N-②-③ ** AYLD39920⑤N-②-③ ** AYLD39902⑤N-②-③ **
	Transformer	1NO-1NC 2NO 2NC	AYLD3 ④ 11⑤N-② ** AYLD3 ④ 20⑤N-② ** AYLD3 ④ 02⑤N-②**
ø 40mm Momentary Push-Pull (3-position)	Full Voltage	1NO-1NC 1NC-1LB†	AYLD229911⑤N-②-③ -TK962 AYLD229902S⑤N-②-③-TK962
	Transformer	1NO-1NC 1NC-1LB†	AYLD22 ④ 11⑤N-②-TK962 AYLD22 ④ 02S⑤N-②-TK962

Unibody E-Stops

Style		Contacts	Part Number
ø 40mm Pushlock Turn Reset (available in Red only)		1NO-1NC 2NC	HN1E-BV4F11-R* HN1E-BV4F02-R*
Illuminated ø 40mm Pushlock Turn Reset (available in Red only)		1NO-1NC 2NC	HN1E-LV4F11Q⑤-R-③ HN1E-LV4F02Q⑤-R-③

1. In place of ①, specify the button color code
2. In place of ②, specify the lens color code.
3. In place of ③, specify the Full Voltage (lamp voltage) Code.
4. In place of ④, specify the transformer voltage code.
5. In place of ⑤, specify the Lamp Type code.
6. With single unit construction, the positive action contacts are integrated in the body of the switch. This provides an extra degree of safety and reliability for critical emergency stop functions.
7. HN1E series E-stops comply with EN418, the IEC "E-Stop Addendum to the Low Voltage Directive," this includes "tamper proof" operation whereby a change of contact state is not possible by "teasing" or "floating" the operator.
8. 3 position push-pull available in spring return to center only.
9. *Available in red only.
10. **Not available in blue.
11. †The most common configuration for motor starting applications.
12. For sub-assembly part numbers, see next page.
13. For nameplates and accessories, see page 634 and 632.
14. For dimensions, see page 637.

3 Position Push-Pull†

Contact	Push	Center	Pull
NC (BST-001)	O	O	X
NC-LB (BST-001S)	O	X	X
NO (BST-010)	X	O	O
NO-EM (BST-010S)	X	X	O

① Button Color Codes

Color	Code
Black	B
Green	G
Red	R
Blue	S
Yellow	Y

② LED/Lens Color Codes

Color	Code
Amber	A
Green	G
Red	R
Blue	S
White	W

③ Full Voltage Codes

Voltage	Code
6V AC/DC	6V
12V AC/DC	12V
24V AC/DC	24V
120V AC	120V
240V AC	240V (LED only)

④ Transformer Voltage Codes

Voltage	Code
120VAC	126
240VAC	246
480VAC	486

Transformers step down to 6V.

⑤ Lamp Type Codes

Lamp	Code
Incandescent	Blank
LED	D

Non-Illuminated Selector Switches (Assembled)

Non-Illuminated 2-Position Selector Switches

Style					Part Number		
Contact	Mounting	Operator Position L	Operator Position R		Maintained	Spring Return from Right	Spring Return from Left
					L R	L R	L R
1NO	1 2	O O	X O	Knob Lever Key	ASD210N ASD2L10N ASD2K10N	ASD2110N ASD21L10N ASD21K10N	ASD2210N ASD22L10N ASD22K10N
1NC	1 2	X O	O O	Knob Lever Key	ASD201N-116 ASD2L01N-116 ASD2K01N-116	ASD2101N-116 ASD21L01N-116 ASD21K01N-116	ASD2201N-116 ASD22L01N-116 ASD22K01N-116
1NO 1NC	1 2	X O	O X	Knob Lever Key	ASD211N ASD2L11N ASD2K11N	ASD2111N ASD21L11N ASD21K11N	ASD2211N ASD22L11N ASD22K11N
2NO	1 2	O O	X X	Knob Lever Key	ASD220N ASD2L20N ASD2K20N	ASD2120N ASD21L20N ASD21K20N	ASD2220N ASD22L20N ASD22K20N
2NC	1 2	X X	O O	Knob Lever Key	ASD202N-104 ASD2L02N-104 ASD2K02N-104	ASD2102N-104 ASD21L02N-104 ASD21K02N-104	ASD2202N-104 ASD22L02N-104 ASD22K02N-104
2NO 2NC	1 2 3 4	O X O X	X O X O	Knob Lever Key	ASD222N ASD2L22N ASD2K22N	ASD2122N ASD21L22N ASD21K22N	ASD2222N ASD22L22N ASD22K22N
2NO 2NC	1 2 3 4	O O X X	X X O O	Knob Lever Key	ASD222N-111 ASD2L22N-111 ASD2K22N-111	ASD2122N-111 ASD21L22N-111 ASD21K22N-111	ASD2222N-111 ASD22L22N-111 ASD22K22N-111

1. The truth table indicates the operating position of contact block when the operator is switched to that position.
   X = On (closed contacts) O = Off (open contacts)
   X—X = Overlapping Contacts: Remain on (closed contacts) when switch is moved between these two positions.
2. All knob and lever selector switches come in black. Other colors are available by ordering the knob or lever separately.
3. Custom contact arrangements available, see page 629 or call IDEC for details.

Non-Illuminated 3-Position Selector Switches

Style						Part Number			
Contact	Mounting	Operator Position L	Operator Position C	Operator Position R		Maintained	Spring Return from Right	Spring Return from Left	Spring Return Two-Way
						L C R	L C R	L C R	L C R
2NO	1 2	X O	O O	O X	Knob Lever Key	ASD320N ASD3L20N ASD3K20N	ASD3120N ASD31L20N ASD31K20N	ASD3220N ASD32L20N ASD32K20N	ASD3320N ASD33L20N ASD33K20N
2NC	1 2	O X	X—X X—X	X O	Knob Lever Key	ASD302N ASD3L02N ASD3K02N	ASD3102N ASD31L02N ASD31K02N	ASD3202N ASD32L02N ASD32K02N	ASD3302N ASD33L02N ASD33K02N
2NO 2NC	1 2 3 4	X O O X	O O X—X	O X X O	Knob Lever Key	ASD322N ASD3L22N ASD3K22N	ASD3122N ASD31L22N ASD31K22N	ASD3222N ASD32L22N ASD32K22N	ASD3322N ASD33L22N ASD33K22N
2NO 2NC	1 2 3 4	X X—X O O	O X O	X O O X	Knob Lever Key	ASD322N-309 ASD3L22N-309 ASD3K22N-309	ASD3122N-309 ASD31L22N-309 ASD31K22N-309	ASD3222N-309 ASD32L22N-309 ASD32K22N-309	ASD3322N-309 ASD33L22N-309 ASD33K22N-309
2NO 2NC	1 2 3 4	O O O O	X O X O	O X O X	Knob Lever Key	ASD322N-310 ASD3L22N-310 ASD3K22N-310	ASD3122N-310 ASD31L22N-310 ASD31K22N-310	ASD3222N-310 ASD32L22N-310 ASD32K22N-310	ASD3322N-310 ASD33L22N-310 ASD33K22N-310
4NO	1 2 3 4	X O X O	O O O O	O X O X	Knob Lever Key	ASD340N ASD3L40N ASD3K40N	ASD3140N ASD31L40N ASD31K40N	ASD3240N ASD32L40N ASD32K40N	ASD3340N ASD33L40N ASD33K40N
4NC	1 2 3 4	O X—X O X—X	X—X X—X X—X	X O X O	Knob Lever Key	ASD304N ASD3L04N ASD3K04N	ASD3104N ASD31L04N ASD31K04N	ASD3204N ASD32L04N ASD32K04N	ASD3304N ASD33L04N ASD33K04N

1.4.6 CPU 315-2 DP

DP master or DP slave

You can operate the CPU 315-2 DP on your 2nd interface (PROFIBUS-DP interface) as DP Master or DP Slave in a PROFIBUS-DP network.

For details on PROFIBUS-DP characteristics of CPU 315-2 DP refer to Chapter 2.

CPU 315-2 DP, Technical Data

CPU and Product Version	
MLFB	6ES7 315-2AF03-0AB0
• Hardware version	01
• Firmware version	V 1.1.0
• Matching programming package	*STEP 7* V 5.0; Service Pack 03
Memory	
Work memory	
• integral	64 KB
• Expandable	no
Load memory	
• integral	96 KB RAM
• Expandable FEPROM	Up to 4 MB
• Expandable RAM	no
Backup	Yes
• With battery	All data
• Without battery	4736 bytes
Processing times	
Processing times for	
• Bit instructions	0.3 µs minimum
• Word instructions	1 µs minimum
• Double integer math	2 µs minimum
• Floating-point math instructions	50 µs minimum
Timers/Counters and their retentive characteristics	
S7 counters	64
• Adjustable retentivity	from C 0 to C 63
• Preset	from C 0 to C 7
• Counting range	0 to 999
IEC Counters	Yes
• Type	SFB

S7 timers	128
• Adjustable retentivity	from T 0 to T 127
• Preset	No retentive times
• Timing range	10 ms to 9990 s
IEC Timers	Yes
• Type	SFB
Data areas and their retentive characteristics	
Retentive data area as a whole (inc. flags, timers, counters)	4736 bytes
Bit memories	2048
• Adjustable retentivity	MB 0 to MB 255
• Preset	MB 0 to MB 15
Clock memories	8 (1 memory byte)
Data blocks	max. 255 (DB 0 reserved)
• Size	max. 16 KB
• Adjustable retentivity	8 DB; max. 4096 data bytes
• Preset	No retentivity
Local data (non-alterable)	max. 1536 bytes
• Per priority class	256 bytes
Blocks	
OBs	See Instruction List
• Size	max. 16 KB
Nesting depth	
• Per priority class	8
• additional levels within an error OB	4
FBs	max. 192
• Size	max. 16 KB
FCs	max. 192
• Size	max. 16 KB

Address areas (I/O)	
Peripheral address area, digital/analog	1 KB/1 KB (freely addressable)of these are
• distributed	1 KB/1 KB
Process image (cannot be customized)	128/128 bytes
Digital channels	max. 8192 (minus 1 byte diagnostic address per DP slave)/8192
• Centralized	max. 1024/1024
Analog channels	max. 512 (minus 1 byte diagnostic address per DP slave)/512
• Centralized	max. 256/128
Configuration	
Rack	max. 4
Modules per module rack	max. 8
Number of DP masters	
• integral	1
• via CP	1
S7 message functions	
Simultaneously active Alarm-S blocks	max. 50
Time	
Real-time clock	Yes
• Backed-up	Yes
• Accuracy	See Section 1.1.6
Operating hours counter	1
• Number	0
• Value range	0 to 32767 hours
• Selectivity	1 hour
• Retentive	Yes
Clock synchronisation	Yes
• On PLC	Master
• CP on MPI	Master/Slave
Testing and commissioning functions	
Status/Modify Variables	Yes
• Variable	Inputs, outputs, flags, DBs, timers, counters
• Number	
– Monitor Variables	max. 30
– Modify Variables	max. 14
Force	Yes
• Variable	Inputs, outputs
• Number	max. 10
Monitor block	Yes

Single sequence	Yes
Breakpoint	2
Diagnostic buffer	Yes
• Number of entries (non-alterable)	100
Communication functions	
PD/OP communication	Yes
Global data communication	Yes
• Number of GD packets	
– Sender	1
– Receiver	1
• Size of GD packets	max. 22 bytes
– Number of which consistent	8 bytes
S7 basic communication	Yes (server)
• User data per job	max. 76 bytes
– Number of which consistent	32 bytes for X/I_PUT/_GET; 76 bytes for X_SEND/_RCV
S7 communication	Yes
• User data per job	max. 160 bytes
– Number of which consistent	32 bytes
S7-compatible communication	Yes (via CP and loadable FC)
• User data per job	Dependent on CP
– Number of which consistent	Dependent on CP
Standard communication	Yes (via CP and loadable FC)
• User data per job	Dependent on CP
– Number of which consistent	Dependent on CP
Number of connection resources	12 for PD/OP/S7 basic/S7 communication
• Reservation for	
– PD communication User-definable Default	max. 11 from 1 to 11 1
– OP communication User-definable Default	max. 11 from 1 to 11 1
– S7 basic communication User-definable Default	max. 8 from 0 to 8 8
Routing connections	max. 4

Interfaces	
1. Interface	
Functionality	
• MPI	Yes
• DP Master	No
• DP Slave	No
• Galvanically isolated	No
MPI	
• Services	
– PD/OP communication	Yes
– Global data communication	Yes
– S7 basic communication	Yes
– S7 communication	Yes (server)
• Transmission rates	19.2; 187.5 Kbps
2. Interface	
Functionality	
• DP Master	Yes
• DP Slave	Yes
– Status/Modify; Program; Routing	Yes, can be activated
• Direct data exchange	Yes
• Point-to-point connection	No
• Default setting	None
• Galvanically isolated	Yes
DP Master	
• Services	
– Equidistance	Yes
– SYNC/FREEZE	Yes
– Activation/deactivation of DP slaves	Yes
• Transmission rates	Up to 12 Mbps
• Number of DP slaves	max. 64
• Address area	max. 1 KB I/1 Kbyte O
• User data per DP slave	max. 244 bytes I and 244 bytes O

DP Slave	
• Services	
– Status/Modify; Program via PROFIBUS Routing	Yes, can be activated
• Device master file	Sie3802f.gsg
• Transmission rate	... up to 12 Mbps
• Transfer memory	244 bytes I/244 bytes O
– Address areas	max. 32 with max. 32 bytes each
Dimensions	
Assembly dimension B × H × T mm (mm)	80 × 125 × 130
Weight	Approx. 0.53 kg
Programming	
Programming language	STEP 7
Stored instructions	See Instruction List
Nesting levels	8
System functions (SFCs)	See Instruction List
System function blocks (SFBs)	See Instruction List
User program security	Password protection
Voltages, Currents	
Power supply	24V DC
• Permissible range	20.4 to 28.8 V
Current consumption (idle)	typical 0.9 A
Inrush current	typical 8A
I^2t	0.4 A^2s
External fusing for supply lines (recommendation)	Circuit breaker; 2 A, Type B or C
PD supply at MPI (15 to 30V DC)	max. 200 mA
Power losses	typical 10 W
Battery	Yes
• Backup margin at 25° C and continuous CPU buffering	min. 1 year
• Battery shelf life at 25°C	approx. 5 years
Accumulator	Yes
– at 0 to 25°C	Approx. 4 weeks
– at 40° C	Approx. 3 weeks
– at 60 ° C	Approx. 1 week
• Battery charging time	Approx. 1 hour

Table 3- 3 Digital input modules (continued)

Properties	Module				
	SM 321; DI 16 x DC48-125V (-1CH20-)	SM 321; DI 16 x AC120/230 V (-1FH00-)	SM 321; DI 16 x NAMUR (-7TH00-) *	SM 321; DI 8 x AC 120/230V (-1FF01-)	SM 321; DI 8 x AC 120/230 V ISOL (-1FF10-)
Number of inputs	16 DI; isolated in groups of 4	16 DI; isolated in groups of 4	16 DI; isolated in groups of 2	8 DI; isolated in groups of 2	8 DI; isolated in groups of 1
Rated input voltage	120/230 VAC	120/230 VAC	24 VDC	120/230 VAC	120/230 VAC
Suitable for...	Switches; 2-wire, 3-wire and 4-wire proximity switches (BEROs)	Switches; 2-wire / 3-wire AC proximity switches	NAMUR encoder	Switches; 2-wire / 3-wire AC proximity switches	
Supports isochronous mode	No	No	No	No	No
Programmable diagnostics	No	No	No	No	No
Diagnostic interrupt		No			
Edge-triggered hardware interrupt	No	No	No	No	No
Adjustable input delays	No	No	No	No	No
Special features		-	-	-	-

* This module is described in the ET 200M Signal Modules for Process Automation manual. You can find the manual on the Internet (http://support.automation.siemens.com/WW/view/en/7215812).

3.1.2 Digital output modules

Overview of properties

The table below shows the essential properties of the digital output modules

Table 3- 4 Digital output modules

Properties	Module				
	SM 322; DO 64 x DC24V/0.3A Sourcing (-1BP00-)	SM 322; DO 64 x DC 24V/0.3A Sinking (-1BP50-)	SM 322; DO 32 x DC24V/0.5A (-1BL00-)	SM 322; DO 32 x AC120/230V/1A (-1FL00-)	SM 322; DO 16 x DC24V/0.5A (-1BH01-)
Number of outputs	64 DO; isolated in groups of 16	64 DO; isolated in groups of 16	32 DO; isolated in groups of 8	32 DO; isolated in groups of 8	16 DO; isolated in groups of 8
Output current	3 A	3 A	0.5 A	1.0 A	0.5 A
Rated load voltage	24 VDC	24 VDC	24 VDC	24 VDC	24 VDC
Suitable for...	solenoid valves, DC contactors and signal lamps				
Supports isochronous mode	no	no	No	No	No
Programmable diagnostics	No	No	No	No	no
Diagnostic interrupt	No	No	No	No	No
Substitute value output	No	No	No	No	No
Special features	-				

Table 3- 5 Digital output modules (continued)

Properties	Module				
	SM 322; DO 16 x DC24V/0.5A High Speed (-1BH10-)	SM 322; DO 16 x UC24/48 V (-5GH00-)	SM 322; DO 16 x AC120/230V/1A (-1FH00-)	SM 322; DO 16 x DC24V/0.5A (-8BH00-)* (-8BH01-) *	SM 322; DO 8 x DC24V/2A (-1BF01-)
Number of outputs	16 DO; isolated in groups of 8	16 DO; isolated in groups of 1	16 DO; isolated in groups of 8	16 DO; isolated in groups of 4	8 DO; isolated in groups of 4
Output current	0.5 A	0.5 A	1 A	0.5 A	2 A
Rated load voltage	24 VDC	24 VDC to 48 VDC 24 VAC to 48 VAC	120/230 VAC	24 VDC	24 VDC
Suitable for...	solenoid valves, DC contactors and signal lamps				
Supports isochronous mode	Yes	no	no	no	no
Programmable diagnostics	No	Yes	no	yes	no
Diagnostic interrupt	no	Yes	No	Yes	No
Substitute value output				Yes	No
Special features	-	-	-	Redundant load control is supported	-

Features & Part Numbers

Key features of the PS5R Slim Line series include:

- Lightweight and Compact in size
- Wide Power Range: 30W – 240W
- Universal Input:
  30W to 90W:85-264V AC/100-370V DC
  120W and 240W:85-264V AC/100-350V DC
- Power Factor Correction (EN61000-3-2) for 60W to 240W
- Meets SEMI F47 Sag Immunity (120W & 240W)
- NEC Class 2 rated (30W & 60W)
- Approved for Class 1, Div. 2 Hazardous Locations
- Fused input
- Overcurrent protection, auto-reset
- Overvoltage protection, shut down
- Spring-up Screw Terminal type, IP20
- DIN rail or Panel Surface Mount
- Approvals:
  CE Marked
  TÜV
  c-UL, UL 508
  UL 1310 (PS5R-SC, -SD)
  UL 1604
  EN 50178:1997
  LVD: EN60950:2000
  EMC: Directive EN61204-3:2000
  (EMI: Class B, EMS: Industrial)

File # E234997

(SEMI F47 120W & 240W only)

Part Numbers

Part Number	Item	Watts	Rated Voltage	Rated Current
PS5R-SC12		30	12V DC	2.5A
PS5R-SC24			24V DC	1.3A
PS5R-SD24		60	24V DC	2.5A
PS5R-SE24		90	24V DC	3.75A
PS5R-SF24		120	24V DC	5A
PS5R-SG24		240	24V DC	10A

L

Power Supplies

Specifications

Part Numbers	12VDC output		PS5R-SC12	–	–	–	–
	24VDC output		PS5R-SC24	PS5R-SD24	PS5R-SE24	PS5R-SF24	PS5R-SG24
Output Capacity			30W	60W	90W	120W	240W
Input	Input Voltage (single-phase, 2-wire)		85 to 264 VAC, 100 to 370 VDC			85 to 264V AC, 100 to 350V DC	
	Input Current (typical)	100VAC	0.9A	1.7A	2.3A	1.8A	3.5A
		200VAC	0.6A	1.0A	1.4A	1.0A	1.7A
	Internal Fuse Rating		3.15A	3.15A	4A	4A	6.3A
	Inrush Current (cold start)		50A maximum (at 200V AC)				
	Leakage Current (at no load)		0.75mA maximum			1mA maximum	
	Typical Efficiency	12VDC	78%	–	–	–	–
		24VDC	80%	83%	82%	84%	
Output	Output Current Ratings	12VDC	2.5A	–	–	–	–
		24VDC	1.3A	2.5A	3.75A	5A	10A
	Voltage Adjustment		±10% (V. ADJ control on front)				
	Output Holding Time		20ms minimum (at rated input and output)				
	Starting Time		–	–	–	650ms maximum	500ms maximum
	Rise Time		100ms maximum (at rated input and output)			200ms maximum	
	Line Regulation		0.4% maximum				
	Load Regulation		1.5% maximum				0.8% max
	Temperature Regulation		0.05% degree C maximum				
	Ripple Voltage		2% peak to peak maximum (including noise)			1% peak to peak maximum (including noise)	
	Overcurrent Protection		105% or more, auto reset		103 to 110%, auto reset	105 to 130%, auto reset	
	Overvoltage Protection		120% min. SHUTDOWN				
Parallel Operation			No	No	No	No	No
Dielectric Strength			Between Input and Ground: 2000 VAC, 1 minute*				
Insulation Resistance			Between Input & Output Terminals: 100 MΩ Min				
Operating Temperature			-10 to 60°C (14 to 140°F)				
Storage Temperature			-25 to 75°C (-13 to +167°F)				
Operating Humidity			20 to 90% relative humidity (no condensation, no freezing)				
Vibration Resistance			Frequency 10 to 55Hz, Amplitude 0.375mm				
Shock Resistance			300m/s^2 3 times each in 6 axes				
Approvals			EMC: EN61204-3 (EMI: Class B, EMS: Industrial), LVD: EN60950, EN50178:1997, UL 1604, UL 508, UL1310 (PS5R-SC, -SD), c-UL (CSA 22.2 No. 14)				
			–			SEMI F47	
Harmonic Directive (EN61000-3-2)			N/A		EN61000-3-2 A14 class A		
Weight (approx.)			250g	285g	440g	630g	1000g
Terminal Screw			M3.5 slotted-Phillips head screw (screw terminal type)				
IP protection			IP20 fingersafe				
Dimensions H x W x D (mm)			95 x 36 x 108		115 x 46 x 121	115 x 50 x 129	125 x 80 x 149.5
Dimensions H x W x D (inches)			3.74 x 1.42 x 4.25		4.53 x 1.81 x 4.76	4.53 x 1.97 x 5.08	4.92 x 3.15 x 5.89

1. *For dimensional drawings, see page L-7.*
2. **Between input and output: 3000VAC, 1 minute; Between output and ground: 500VAC, 1 minute*

Anti-Condensation Heater

Models: AHC-15W, AHC-30W, AHC-35W, AHC-50W

The "AHC" touch safe series anti-condensation space heater is designed to keep the temperature inside of an enclosure several degrees above the external ambient temperature and above the dew point. Keep your electrical equipment on line by preventing corrosion due to condensation. Contact our engineering department for specifications for the proper AHC model used in other types of enclosures (Aluminum, Fiberglass, etc.).

Features

- There are no moving parts
- No thermostat to set or malfunction
- No adjustments are needed for ambient temperature changes
- Easy to install (connect two wires and insert two mounting screws)
- Compact size
- UL Recognized (E121431)
- Due to heat sink design, the max external surface temperature are "Touch Safe"

Technical Specifications

- Operating temperatures: -30˚C to 60˚C
- Watts: 15, 30, 35 or 50 per unit, depending on model
- Extruded black anodized aluminum
- Life expectancy-20 years
  Rated 120 VAC, output will vary with
- AC or DC voltage
- When possible, two smaller units are more efficient than one larger unit

8725 Youngerman Court, Ste 206, Jacksonville, FL 32244 ■ 888-875-2221 ph (904)778-2444 fax ■ Website:www.ingramproducts.com ■ e-mail: info@ingramproducts.com

Temperature Control Switches

Bulletin
A80

Application

These easy-to-install thermostats are designed to regulate and monitor air temperature in enclosures that are set up to operate with heaters, fans, filter ventilators, heat exchangers and/or signal transmitters. Thermostat ATEMNC is specifically designed for use with heaters (contacts open on temperature rise), while thermostat ATEMNO is designed to control fans, filter ventilators or for switching signal transmitters in the event of overheating (contacts close on temperature rise). Both thermostats have an adjustable set point range of 32 F to 140 F.

When the enclosure reaches the pre-determined set point, temperature contacts in the thermostat are activated and the fan or heater begins to operate. Thermostats prolong the life expectancy of heaters and fans by curtailing their operating hours and also increase the working efficiency of electrical components by exposing them to fewer contaminants from the surrounding environment compared to continuous fan operation.

Features

- Additional labels included:
  - Label for conversion to Celsius scale
  - Blank label to cover set point range label when adjustment after initial setting is not desired

Construction

- Bimetal temperature sensor
- Plastic housing
- Connections consist of tubular screw terminals for AWG 14 (0.04 sq. in.)
- Provision for both panel mounting and DIN rail mounting

Finish

Molded plastic housing is black

Industry Standards

UL94-VO
Protection rating IEC IP30
UL/cUL Component Recognized, UL File No. E164102
CSA Certified, CSA File No. 215952
CE

Load Rating

Amps	Volts	Load Type
15	120 AC	Resistive
16	250 AC	Resistive
1	120-250 AC	Resistive
10	12-24 DC	Resistive
1	12-24 DC	Inductive

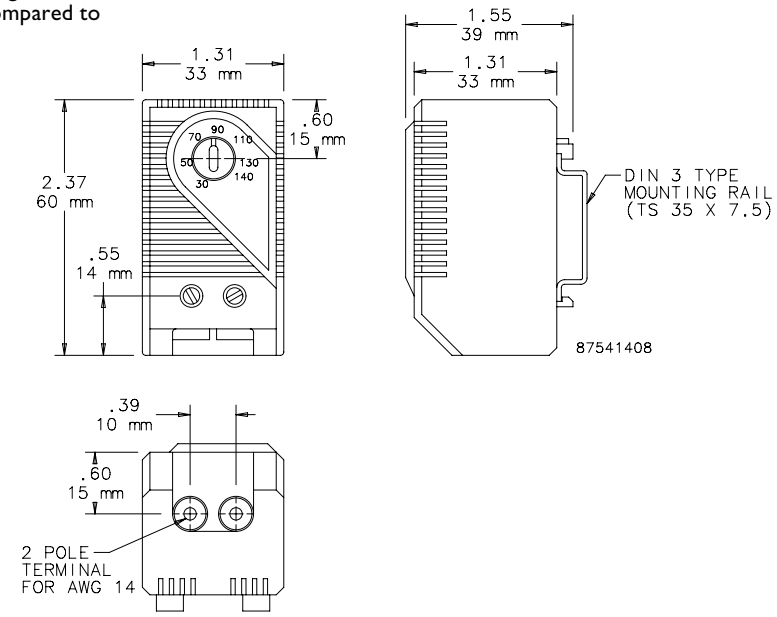

Standard Sizes Temperature Control Switches (Thermostats)

Catalog Number	Contact Type	Control Application
ATEMNC	NC (normally closed), quick-acting	Heater
ATEMNO	NO (normally open), quick-acting	Fan

 © 2008 Hoffman Enclosures Inc.

Corrosion Inhibitors

Industrial Corrosion Inhibitors

Hoffman corrosion inhibitors protect

- Interior components of electrical enclosures, boxes, consoles and wireways
- Interior components of electronic enclosures
- Electrical and electronic equipment and controls
- Parts and components that are packaged in crates during shipping and storage
- Switch gear and relay cabinets
- Interiors of pipes, conduits and fuse boxes
- Process control computers, instruments and recording devices
- Tool chest interiors and contents
- Equipment stored at construction sites

Chief Advantages

- Protects against salt and high humidity
- Eliminates the need of oiling, plating or dipping metal
- Puts protected equipment to use immediately without degreasing or coating removal

How They Work

Each inhibitor contains a special chemical combination that vaporizes and condenses on all surfaces in an enclosed area. Vapors will redeposit as needed in the event of condensation of moisture on surfaces. These vapors reach every part of an enclosure, protecting all interior components. Spraying, wiping or greasing are not required. This eliminates precoating, special wraps and drying agents. Protection is effective even in salt-water atmospheres. The AHCI5E and AHCI10E emitters have additional red-metal inhibitors for further protection. Enclosures containing corrosion inhibitors must be reasonably sealed.

Life Expectancy and Usage

The normal useful life-span of Hoffman corrosion inhibitors is in excess of one year. However, inhibitor life expectancy is shortened by approximately 25 percent when exposed to temperatures above 104 F (40 C). This product is not recommended for use where temperature exceeds 199 F. Since Hoffman corrosion inhibitors are vapor-phase protective, all surfaces to be protected should be accessible to the vapors. The maximum distance the vapors can travel is approximately 1.50 ft. (.46 m). Protection of long, narrow enclosures can be achieved with tape or multiple inhibitors.

Storage and Handling

Each Hoffman corrosion inhibitor is individually packaged in a resealable bag for maximum effectiveness at the time of usage. Corrosion inhibitors should be stored at temperatures not exceeding 120 F (45 C). Hoffman corrosion inhibitors are not returnable.

When determining the proper corrosion inhibitor for your application, assume the enclosure volume to be protected is greater than calculated if (1) cabinet doors are opened frequently, (2) cabinet is located in an extremely corrosive area and/or (3) cabinet length divided by depth is greater than four.

AHCI1DV

Foam device protects one cubic foot (28 liters) of enclosure volume for approximately one year.
Size: .25 x 1.25 x 3.00 in. (6 x 32 x 76 mm)

AHCI5E

Emitter protects 5 ft.^{3} (142 liters) of enclosure volume for approximately two years from the date of manufacture. Emitters contain additional red metal (non-ferrous) inhibitors.
Size: 2.31 in. (diameter) x 0.81 in. (high) (59 mm x 21 mm)

AHCI10E

Emitter protects 10 ft.^{3} (283 liters) of enclosure volume for approximately two years from the date of manufacture. Emitters contain additional red metal (non-ferrous) inhibitors.
Size: 2.31 in. (diameter) x 1.38 in. (high) (59 mm x 35 mm)

AHCI60R

Tape protects 60 ft.^{3} of enclosure volume per roll. Use approximately 2.50 in. (63 mm) of tape per cubic foot (28 liters) of enclosure volume to be protected. Each roll of tape is packaged individually in a resealable bag.
Size: .25 in. x .75 in. x 12.00 ft. (6 mm x 19 mm x 3.6 m)

AHCI240R

Tape protects 240 ft.^{3} of enclosure volume per roll. Use approximately 1.00 in. (25 mm) of tape per cubic foot (28 liters) of enclosure volume to be protected. Each roll of tape is packaged individually in a resealable bag.
Size: .25 in. x 2.00 in. x 20.00 ft. (6 mm x 51 mm x 6.1 m)

AHCI238S

Spray is a non-conductive, nonflammable, vapor-phase film and is non-toxic. It has essentially neutral pH value. Application provides instant protection against corrosion. Spray is water soluble and can be easily flushed away with water if desired. This product should be kept from freezing and has a shelf life of 2+ years in normal warehouse conditions.

Bulletin: A80

Standard Product

Catalog Number	Enclosure Volume Protected (ft.^{3})	Enclosure Volume Protected (liters)	Package Qty.
AHCI1DV	1	28.32	50
AHCI5E	5	141.6	25
AHCI10E	10	283.2	12
AHCI60R	60 per roll	1699 per roll	3
AHCI240R	240 per roll	6797 per roll	1
AHCI238S	Corrosion Inhibitor Spray	Corrosion Inhibitor Spray	6

Metal Protection Chart

Metal	Protected by Chemical	Unprotected by Chemical
Aluminum	Marked reduction of surface attack; no pitting	Severe surface attack; tarnish; pitting
Brass [a]	Decreased tarnish; very minor surface attack	Surface discoloration; pitting
Steel, Iron	No change	Severe corrosion
Copper [a]	Slight staining	Heavy corrosive attack
Zinc Plate	Slight discoloration	Severe corrosion
Tin Plate	Slight discoloration	Moderate corrosive attack

[a] AHCI5E and AHCI10E emitters are recommended for these materials

© 2009 Hoffman Enclosures Inc.

CONCEPT® Wall-Mount Enclosures

CONCEPT® with Additional Quarter-Turn Latches, Type 4X

Industry Standards

Mounting brackets required to meet UL/CSA external mounting requirements.

UL 508A Listed; Type 3R, 4, 4X, 12; File No.E61997
cUL Listed per CSA C22.2 No 94; Type 3R, 4, 4X, 12; File Number E61997

NEMA/EEMAC Type 3R, 4, 4X, 12, 13
IEC 60529, IP66
Meets NEMA Type 3RX requirements

Application

For indoor or outdoor applications that require corrosion protection from chemicals and water, CONCEPT® enclosures house larger controls and feature streamlined styling with an attractive stroked finish, flush quarter-turn latches and an integral door ramp that ensures the door gasket sealing surface aligns with the enclosure body for secure closure.

Specifications

- Manufactured from 14 gauge Type 304 or Type 316L stainless steel
- Seams continuously welded and ground smooth
- Minimum-width body flange provides maximum body opening
- External formed 90-degree body flange trough
- Stainless steel quarter-turn latches with flush slotted insert provided on three sides of enclosure door
- Integral door ramp to properly align door and gasket to body offset
- Panel mounting studs fit optional CONCEPT panels and other accessories
- Mounting holes in back of body for direct mounting or for optional external mounting brackets
- Stainless steel hidden hinges
- Doors are interchangeable and easily removed by pulling clip-style hinge pins
- Door bars furnished
- Provision on door for thermoplastic data pocket
- Provision on door for optional doorstop kit
- Seamless foam-in-place gasket
- Self-grounding latch system with double seal
- Bonding provision on door; grounding stud on body
- Furnished hardware kit consists of panel mounting nuts, panel grounding hardware and sealing washers for wall-mounting holes
- Installation instructions

Finish

Door and body have smooth #4 brushed finish.

Patents

This product is covered by the following patents:
US D360,345
DE 9405854.7
US 5,509,703
US 5,666,695
Other patents pending.

Accessories

See also Accessories.
Industrial Corrosion Inhibitors
Type 316 Stainless Steel Door Stop Kit
CONCEPT® Panels
H_2OMIT™ Vent Drains, Type 4X
H_2OMIT™ Thermoelectric Dehumidifier
Handles
Lock Inserts

Modification and Customization

Hoffman excels at modifying and customizing products to your specifications. Contact your local Hoffman sales office or distributor for complete information.

Bulletin: CWS

© 2010 Pentair Technical Products

CONCEPT® Wall-Mount Enclosures

Standard Product

Catalog Number	AxBxC in./mm	Door Gauge	Body Gauge	Panel	Conductive Panel	Panel Size D x E in./mm	Mounting G x G in./mm	Latches Qty.	Style	J in./mm
CSD363610SSR	36.00 x 36.00 x 10.00 914 x 914 x 254	14	14	CP3636	CP3636G	34.20 x 34.20 869 x 869	34.50 x 34.50 876 x 876	4	Quarter-turn	10.00 254
CSD363610SS6R	36.00 x 36.00 x 10.00 914 x 914 x 254	14	14	CP3636	CP3636G	34.20 x 34.20 869 x 869	34.50 x 34.50 876 x 876	4	Quarter-turn	10.00 254
CSD423610SSR	42.00 x 36.00 x 10.00 1067 x 914 x 254	14	14	CP4236	CP4236G	40.20 x 34.20 1021 x 869	40.50 x 34.50 1029 x 876	4	Quarter-turn	13.00 330
CSD423610SS6R	42.00 x 36.00 x 10.00 1067 x 914 x 254	14	14	CP4236	CP4236G	40.20 x 34.20 1021 x 869	40.50 x 34.50 1029 x 876	4	Quarter-turn	13.00 330
CSD483610SSR	48.00 x 36.00 x 10.00 1219 x 9145 x 254	14	14	CP4836	CP4836G	46.20 x 34.20 1173 x 869	46.50 x 34.50 1181 x 876	4	Quarter-turn	14.00 356
CSD483610SS6R	48.00 x 36.00 x 10.00 1219 x 914 x 254	14	14	CP4836	CP4836G	46.20 x 34.20 1173 x 869	46.50 x 34.50 1181 x 876	4	Quarter-turn	14.00 356
CSD603610SSR	60.00 x 36.00 x 10.00 1524 x 914 x 254	14	14	CP6036	CP6036G	58.20 x 34.20 1478 x 869	58.50 x 34.50 1486 x 876	4	Quarter-turn	17.00 432
CSD603610SS6R	60.00 x 36.00 x 10.00 1524 x 914 x 254	14	14	CP6036	CP6036G	58.20 x 34.20 1478 x 869	58.50 x 34.50 1486 x 876	4	Quarter-turn	17.00 432
CSD363612SSR	36.00 x 36.00 x 12.00 914 x 914 x 305	14	14	CP3636	CP3636G	34.20 x 34.20 869 x 869	34.50 x 34.50 876 x 876	4	Quarter-turn	10.00 254
CSD363612SS6R	36.00 x 36.00 x 12.00 914 x 914 x 305	14	14	CP3636	CP3636G	34.20 x 34.20 869 x 869	34.50 x 34.50 876 x 876	4	Quarter-turn	10.00 254
CSD423612SSR	42.00 x 36.00 x 12.00 1067 x 914 x 305	14	14	CP4236	CP4236G	40.20 x 34.20 1021 x 869	40.50 x 34.50 1029 x 876	4	Quarter-turn	13.00 330
CSD423612SS6R	42.00 x 36.00 x 12.00 1067 x 914 x 305	14	14	CP4236	CP4236G	40.20 x 34.20 1021 x 869	40.50 x 34.50 1029 x 876	4	Quarter-turn	13.00 330
CSD483612SSR	48.00 x 36.00 x 12.00 1219 x 914 x 305	14	14	CP4836	CP4836G	46.20 x 34.20 1173 x 869	46.50 x 34.50 1181 x 876	4	Quarter-turn	14.00 356
CSD483612SS6R	48.00 x 36.00 x 12.00 1219 x 914 x 305	14	14	CP4836	CP4836G	46.20 x 34.20 1173 x 869	46.50 x 34.50 1181 x 876	4	Quarter-turn	14.00 356
CSD603612SSR	60.00 x 36.00 x 12.00 1524 x 914 x 305	14	14	CP6036	CP6036G	58.20 x 34.20 869 x 462	58.50 x 34.50 1486 x 876	4	Quarter-turn	17.00 402
CSD603612SS6R	60.00 x 36.00 x 12.00 1524 x 914 x 305	14	14	CP6036	CP6036G	58.20 x 34.20 869 x 462	58.50 x 34.50 1486 x 876	4	Quarter-turn	17.00 402
CSD723612SSR	72.00 x 36.00 x 12.00 1829 x 914 x 305	14	14	CP7236	—	70.20 x 34.20 1783 x 462	70.50 x 34.50 1791 x 876	4	Quarter-turn	23.00 584
CSD723616SSR	72.00 x 36.00 x 16.00 1829 x 914 x 406	14	14	CP7236	—	70.20 x 34.20 1783 x 462	70.50 x 34.50 1791 x 876	4	Quarter-turn	23.00 584

Purchase panels separately.
Optional NEMA style steel and stainless steel panels require conversion kit catalog number CCPM-4.
Catalog numbers ending in 6R are Type 316L stainless steel.

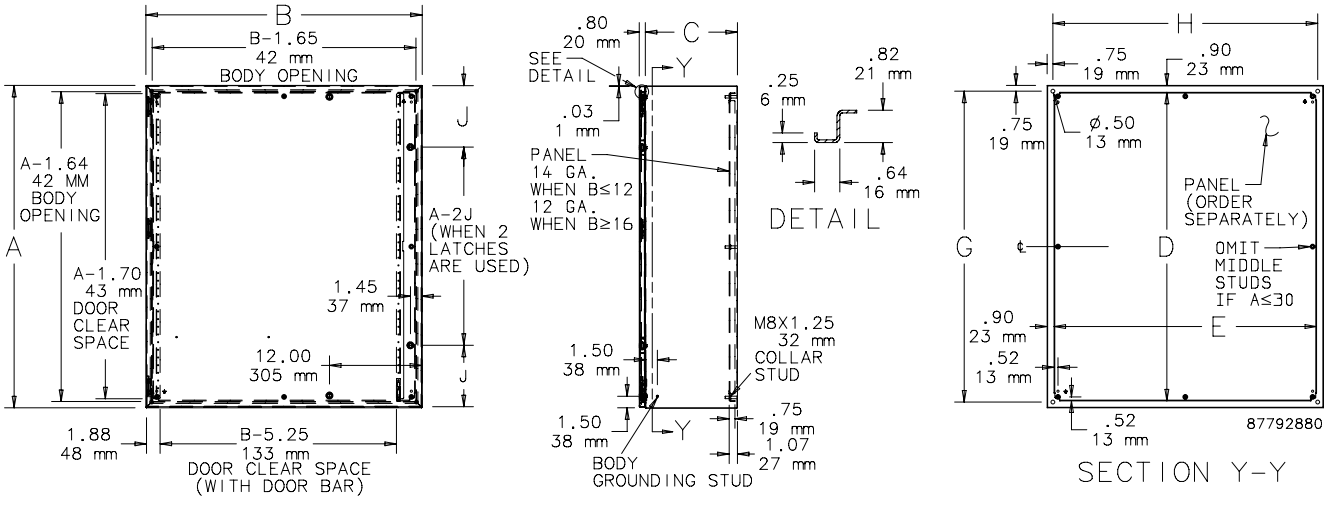

© 2010 Pentair Technical Products

Control Station

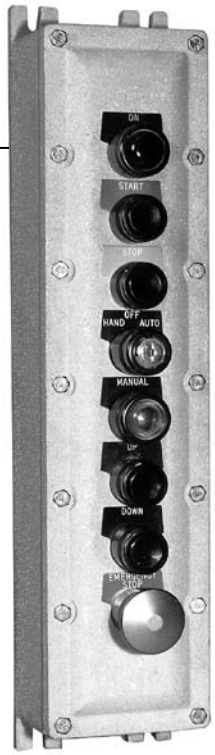

FEATURES

- Lightweight, corrosion-resistant, copper-free aluminum alloy (0.3% max. copper content).
- All operating shafts are stainless steel for corrosion resistance.
- Durable cast on lugs cannot get lost.
- Ground screw is highly visible and accessible.
- Uniform wall thickness (not ribbed) for versatility of conduit openings assuring 5 full threads engagement and maximum available area for conduit drilling and tapping.
- Operators may be mounted through back wall for panel mounting.
- Box depth provides for the stacking of 2 contact blocks.
- Anodized aluminum operators install easily in the field.

TABLE A2 - CONTROL STATION BOXES

# of Operators	Surface Mount	Panel Mount*	Std. Cond. Size (in.)
1	X1	X1P	¾
2	X2	X2P	¾
3	X3	X3P	¾
4	X4	X4P	1
5	X5	X5P	1¼
6	X6	X6P	1¼
7	X7	X7P	1¼
8	X8	X8P	1¼
12	X12	X12P	1½
15	X15	X15P	1½
18	X18	X18P	1½

***Panel Mount:** Operators mounted in back, add P to operator suffix.

Surface Mount: Operators mounted in cover.

NOTE: All operator holes are 3/4" - 14 NPSM

TABLE B2 - PILOT LIGHTS & LIGHTED PUSHBUTTON

Lens Color	SUFFIX NOS. FOR PILOT LIGHTS		
	Guarded Candleabra Base	Guarded Slide Base	Lighted Pushbutton** Unguarded
Amber	337	343	30
Blue	338	344	35
Clear	339	345	40
Green	340	346	45
Red	341	347	50
White	342	348	55

Certifications

Class I, Groups C & D
Class II, Groups E, F & G
Class III
UL Standard 698
CSA Standard C22.2 No. 30
For NEMA 4 or special machining options-see XIFC Series

**CSA certified products require guarded pilot devices

The **ADALET** Engineering Department is Available to Assist you in the Selection of Enclosures and Accessories.

WASTE-TECH
a division of KUSTERS ZIMA

3.5

ULTRASONIC LEVEL CONTROLLER

OPERATION & MAINTENANCE

WENATCHEE WWTP IMPROVEMENTS
PROJECT PO913
WENATCHEE, WA

SECTION 11092 – PERFORATED PLATE SCREENS
SECTION 11095 – SCREENINGS WASHER COMPACTOR

ULTRASONIC LEVEL CONTROLLER

Manufacturer:	Siemens
Controller:	Hydroranger 200
Controller Environment Rating:	NEMA 4X
Transducer:	XPS-10F – Explosion Proof, Class 1, Div 1
Cable Length:	90 feet**
Beam Angle:	12°
Range:	1-33 ft.
Mounting Bracket:	Universal Box Bracket
Outputs Available:	• Relays: 4 Form 'A'/2 Form 'C' relays – Programmable to meet site specific requirements. • All 6 Relays rated 5A at 250 Vac, non-inductive. • 4-20 mA Outputs for both Transducers • 2 mA output maximum – programmable to provide for both transducers or one transducer and differential level. Cannot do both transducer levels and differential level.

**** - Note: If a longer length of transducer cable is required, the Contractor/Engineer must inform Waste-Tech of the correct cable length**.

© Siemens AG 2007

Overview

HydroRanger 200 is an ultrasonic level controller for up to six pumps and provides control, differential control and open channel flow monitoring.

Benefits

- Monitors wet wells, weirs and flumes
- Digital communications with built-in Modbus RTU via RS-485
- Compatible with SmartLinx system and SIMATIC PDM configuration software
- Single or dual point level monitoring
- 6 relays standard
- Auto False-Echo Suppression for fixed obstruction avoidance
- Anti-grease ring/tide mark buildup
- Differential amplifier transceiver for common mode noise rejection and improved signal-to-noise ratio
- Wall and panel mounting options

Application

For water authorities, municipal water and wastewater plants, HydroRanger 200 is an economical, low-maintenance solution delivering control efficiency and productivity needed to meet today's exacting standards. It offers single- or dual-point monitoring with 6 relays standard, as well as digital communications with built-in Modbus RTU via RS-485.

HydroRanger 200 will monitor open channel flow and features more advanced relay alarming and pump control functions as well as volume conversion. It is compatible with SIMATIC PDM, allowing for PC configuration and setup. Sonic Intelligence® advanced echo-processing software provides increased reading reliability.

HydroRanger 200 uses proven continuous ultrasonic echo ranging technology to monitor water and wastewater of any consistency up to 15 m (50 ft) in depth. Achievable resolution is 0.1% with accuracy to 0.25% of range. Unlike contacting devices, HydroRanger 200 is immune to problems caused by suspended solids, harsh corrosives, grease or silt in the effluent, reducing downtime.

The HydroRanger 200 is available in wall or panel mounting versions.

- Key Applications: wet wells, flumes/weirs, bar screen control

Technical specifications

Mode of Operation	
Measuring principle	Ultrasonic level measurement
Measuring range	0.3 to 15 m (1 to 50 ft)
Input	
Analog	0 to 20 mA or 4 to 20 mA, from alternate device, scaleable
Discrete	10 to 50 V DC switching level Logical 0 = < 0.5 V DC Logical 1 = 10 to 50 V DC Max. 3 mA
Output	
Echomax® Transducer	44 kHz
Ultrasonic transducer	Compatible transducers: ST-H and Echomax series XPS-10/10F, XPS 15/15F, XCT-8, XCT-12 and XRS-5
Relays	6 relays, rating 5 A at 250 V AC, non-inductive
	4 SPST Form A / 2 SPDT Form C
mA output	0 to 20 mA or 4 to 20 mA
• Max. load	750 Ω, isolated
• Resolution	0.1% of range
Accuracy	
Error in measurement	0.25% of range or 6 mm (0.24"), whichever is greater
Resolution	0.1% of measuring range[1)] or 2 mm (0.08"), whichever is greater
Temperature compensation	• -50 to +150 °C (-58 to +302 °F) • Integral temperature sensor in transducer • External TS-3 temperature sensor (optional) • Programmable fixed temperature values
Rated operating conditions	
Installation conditions	
Location	Indoor/outdoor
Installation category	II
Pollution degree	4
Ambient conditions	
Ambient temperature (enclosure)	-20 to +50 °C (-4 to +122 °F)
Design	
Weight	
• Wall mount	1.37 kg (3.02 lbs)
• Panel mount	1.50 kg (3.31 lbs)
Material (enclosure)	Polycarbonate
Degree of protection (enclosure)	
• Wall mount	IP65/Type 4X/NEMA 4X
• Panel mount	IP54/Type 3/NEMA 3
Cable	
Transducer and mA output signal	2-core copper conductor, twisted, shielded, 0.5 to 0.75 mm² (22 to 18 AWG), Belden® 8760 or equivalent is acceptable
Max. separation between transducer and transceiver	365 m (1200 ft)

© Siemens AG 2007

HydroRanger 200

Displays and controls	100 x 40 mm (4 x 1.5") multi-block LCD with backlighting
Programming	Programming using handheld programmer or via PC with SIMATIC PDM software
Power supply	
AC version	100 to 230 V AC ± 15%, 50/60 Hz, 36 VA (17 W)
DC version	12 to 30 V DC (20 W)
Certificates and approvals	• CE[2)] • Lloyd's Register of Shipping • ABS Type Approval • FM, $CSA_{NRTL/C}$, UL listed • CSA Class I, Div. 2, Groups A, B, C and D, Class II, Div. 2, Groups F and G, Class III (wall mount only) • MCERTS Class 1 approved for Open Channel Flow
Communication	• RS-232 with Modbus RTU or ASCII via RJ-11 connector • RS-485 with Modbus RTU or ASCII via terminal strips • Optional: SmartLinx® cards for - PROFIBUS DP - DeviceNet™ - Allen-Bradley® Remote I/O

1) Program range is defined as the empty distance to the face of the transducer plus any range extension.

2) EMC performance available upon request.

© Siemens AG 2007

Selection and Ordering data

Order No.

Milltronics HydroRanger 200 C) **7ML1034-**
Ultrasonic level controller for up to six pumps that provides control, differential control and open channel flow monitoring

Mounting
Wall mount, standard enclosure **1**
Wall mount, 4 entries, 4 M20 cable glands included **2**
Panel mount **3**

Power supply
100 to 230 V AC **A**
12 to 30 V DC **B**

Communication (SmartLinx)
Without module **A**
SmartLinx® Allen-Bradley® Remote I/O module **B**
SmartLinx PROFIBUS DP module **C**
SmartLinx DeviceNet™ module **D**
See SmartLinx product page on page 5/179 for more information.

Approvals
General Purpose CE, FM, CSAUS/C, UL listed **1**
CSA Class I, Div. 2, Groups A, B, C and D; Class II, Div 2, Groups F and G; Class III (for wall mount applications only) **2**

Number of measurement points
Single point version **1**
Dual point version **2**

Further designs
Order code

Please add "**-Z**" to Order No. and specify Order code(s).

Stainless steel tag [69 mm x 50 mm (2.71 x 1.97")]: Measuring-point number/identification (max. 16 characters) specify in plain text **Y15**

Instruction manual
Order No.
English C) **7ML1998-1FC04**
French C) **7ML1998-1FC14**
German C) **7ML1998-1FC34**
Note: The instruction manual should be ordered as a separate line on the order.

This device is shipped with the Siemens Milltronics manual CD containing the complete instruction manual library.

Other instruction manuals
SmartLinx Allen-Bradley Remote I/O, English C) **7ML1998-1AP03**
SmartLinx PROFIBUS DP, English C) **7ML1998-1AQ03**
SmartLinx PROFIBUS DP, German C) **7ML1998-1AQ32**
SmartLinx PROFIBUS DP, French C) **7ML1998-1AQ12**
SmartLinx DeviceNet, English C) **7ML1998-1BH02**
Note: The appropriate SmartLinx instruction manual should be ordered as a seperate line on the order.

Accessories
Handheld programmer **7ML1830-2AK**
Tag, stainless steel, 12 x 45 mm (0.47 x 1.77"), one text line, suitable for enclosure **7ML1930-1AC**

TS-3 Temperature Sensor - see TS-3 on page 5/119

Spare parts
Power Supply Board (100 to 230 V AC) C) **7ML1830-1MD**
Power Supply Board (12 to 30 V DC) C) **7ML1830-1ME**
Display Board C) **7ML1830-1MF**

See SmartLinx product page on page 5/179 for more information.

®Modbus is a registered trademark of Schneider Electric.
®Belden is a registered trademark of Belden Wire and Cable Company.
®Allen-Bradley is a registered trademark of Rockwell Automation.
™DeviceNet is a trademark of Open DeviceNet Vendor Association (ODVA)
C) Subject to export regulations AL: N, ECCN: EAR99

Selection and Ordering data

Order No.

Siemens HydroRanger 200 C) **7ML5034-**
Ultrasonic level controller for up to six pumps that provides control, differential control and open channel flow monitoring

Mounting
Wall mount, standard enclosure **1**
Wall mount, 4 entries, 4 M20 cable glands included **2**
Panel mount **3**

Power supply
100 to 230 V AC **A**
12 to 30 V DC **B**

Number of measurement points
Single point version **A**
Dual point version **B**

Communication (SmartLinx)
Without module **0**
SmartLinx® Allen-Bradley® Remote I/O module **1**
SmartLinx PROFIBUS DP module **2**
SmartLinx DeviceNet™ module **3**
See SmartLinx product page on page 5/179 for more information.

Approvals
General Purpose CE, FM, CSAUS/C, UL listed **1**
CSA Class I, Div. 2, Groups A, B, C and D; Class II, Div 2, Groups F and G; Class III (for wall mount applications only) **2**

Further designs
Order code

Please add "**-Z**" to Order No. and specify Order code(s).

Stainless steel tag [69 mm x 50 mm (2.71 x 1.97")]: Measuring-point number/identification (max. 16 characters) specify in plain text **Y15**

Instruction manual
Order No.
English C) **7ML1998-5FC01**
French C) **7ML1998-5FC11**
German C) **7ML1998-5FC31**
Note: The instruction manual should be ordered as a separate line on the order.

This device is shipped with the Siemens Milltronics manual CD containing the complete instruction manual library.

Other instruction manuals
SmartLinx Allen-Bradley Remote I/O, English C) **7ML1998-1AP03**
SmartLinx PROFIBUS DP, English C) **7ML1998-1AQ03**
SmartLinx PROFIBUS DP, German C) **7ML1998-1AQ32**
SmartLinx PROFIBUS DP, French C) **7ML1998-1AQ12**
SmartLinx DeviceNet, English C) **7ML1998-1BH02**
Note: The appropriate SmartLinx instruction manual should be ordered as a seperate line on the order.

Accessories
Handheld programmer **7ML1830-2AK**
Tag, stainless steel, 12 x 45 mm (0.47 x 1.77"), one text line, suitable for enclosure **7ML1930-1AC**

TS-3 Temperature Sensor - see TS-3 on page 5/119

Spare parts
Power Supply Board (100 to 230 V AC) C) **7ML1830-1MD**
Power Supply Board (12 to 30 V DC) C) **7ML1830-1ME**
Display Board C) **7ML1830-1MF**

See SmartLinx product page on page 5/179 for more information.

5

© Siemens AG 2007

HydroRanger 200

Dimensional drawings

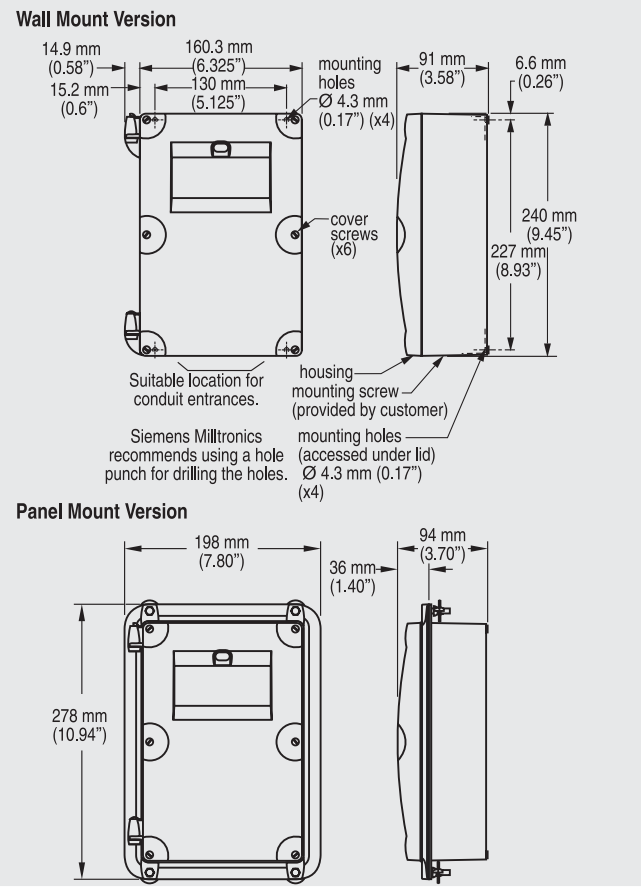

HydroRanger 200 dimensions

Schematics

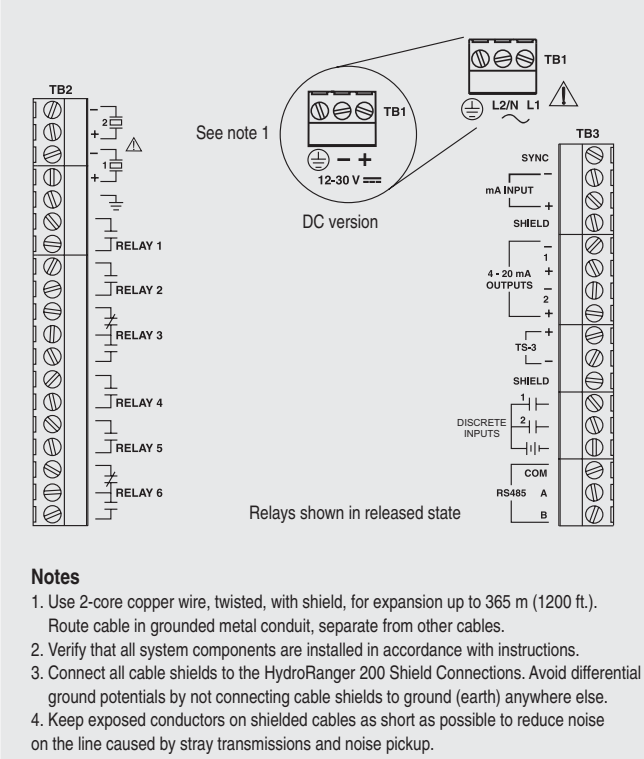

Notes

1. Use 2-core copper wire, twisted, with shield, for expansion up to 365 m (1200 ft.). Route cable in grounded metal conduit, separate from other cables.
2. Verify that all system components are installed in accordance with instructions.
3. Connect all cable shields to the HydroRanger 200 Shield Connections. Avoid differential ground potentials by not connecting cable shields to ground (earth) anywhere else.
4. Keep exposed conductors on shielded cables as short as possible to reduce noise on the line caused by stray transmissions and noise pickup.

HydroRanger 200 connections

© Siemens AG 2007

Echomax XPS and XCT

Overview

Echomax® XPS/XCT transducers use ultrasonic technology to measure level in a wide range of liquids and solids.

Benefits

- Integral temperature compensation
- Low ringing effect reduces blanking distance
- Optional foam facing for dusty applications
- Self-cleaning and low-maintenance
- Chemically resistant
- Hermetically sealed

Application

The transducers can be fully immersed, are resistant to steam and corrosive chemicals and can be installed without flanges.

The XPS series offers versions for various measuring ranges up to 40 m (130 ft) and up to a max. temperature of +95 °C (+203 °F).

The XCT series can be used in applications at higher temperatures to measure level up to a distance of 12 m (40 ft) and at a max. temperature of +145 °C (+293 °F).

During operation, the Echomax transducers emit acoustic pulses in a narrow beam. The level monitor measures the propagation time between pulse emission and its reflection (echo) to calculate the distance.

© Siemens AG 2007

Technical specifications

Input	XPS-10 (standard and F models)	XPS-15 (standard and F models)	XPS-30	XPS-40	XCT-8 (standard and sanitary models)	XCT-12
Measuring range	0.3 to 10 m (1 to 33 ft)	Standard: 0.3 to 15 m (1 to 50 ft) Flanged: 0.45 to 15 m (1.5 to 50 ft)	0.6 to 30 m (2 to 100 ft)	0.9 to 40 m (3 to 130 ft)	0.6 to 8 m (2 to 26 ft)	0.6 to 12 m (2 to 40 ft)
Output						
Frequency	44 kHz	44 kHz	30 kHz	22 kHz	44 kHz	44 kHz
Beam angle	12°	6°	6°	6°	12°	6°
Environmental						
Location	Indoors/outdoors					
Ambient temperature	-40 to +95 °C (-40 to +203 °F)				Standard: -40 to +145 °C (-40 to +293 °F) Sanitary: -40 to +125 °C (-40 to +260 °F)	-40 to +145 °C (-40 to +293 °F)
Pollution degree	4					
Pressure	8 bar (120 psi) Flanged: 0.5 bar (7.25 psi)	8 bar (120 psi) Flanged: 0.5 bar (7.25 psi)	0.5 bar (7.25 psi) Flanged: 0.5 bar (7.25 psi)	0.5 bar (7.25 psi)	Standard: 4 bar (60 psi): -40 to +138 °C (-40 to +280 °F) Standard: 8 bar (120 psi): -40 to +95 °C (-40 to +203 °F) Flanged: 0.5 bar (7.25 psi) Sanitary: XCT-8: 0.5 bar (7.25 psi)	
Design						
Weight	0.8 kg (1.8 lbs)	1.3 kg (2.8 lbs) Flanged: 2 kg (4.4 lbs)	4.3 kg (9.5 lbs)	8 kg (18 lbs)	0.8 kg (1.7 lbs)	1.3 kg (2.8 lbs)
Power supply	Operation of transducer only with approved Siemens Milltronics controllers					
Material	Standard: PVDF Flanged: PVDF with CPVC flange Option: PTFE face with CPVC flange	Standard: PVDF Flanged: PVDF with CPVC flange Option: PTFE face with CPVC flange	Standard: PVDF Flanged: PVDF with CPVC flange Option: PTFE face with CPVC flange	PVDF	Standard: PVDF Options: DERAKANE® flange; PTFE face with universal PVDF flange	
Color	Standard: blue F: gray	Standard: blue F: gray	blue	blue	white	
Process connection	Standard: 1" NPT or 1" BSPT F: 1" NPT	Standard: 1" NPT or 1" BSPT F: 1" NPT	1.5" universal thread (NPT or BSPT)		1" NPT or 1" BSPT	
Cable	2 wire twisted pair/braided and foil shielded 0.5 mm² (20 AWG) PVC jacket				2 wire twisted pair/braided and foil shielded 0.5 mm² (20 AWG) silicone jacket	
Separation	Max. 365 m (1200 ft)					
Certificates and approvals	Standard: CE[1], CSA, FM, ATEX II 2GD F: FM Class I, Div 1, Groups A, B, C and D, Class II Div 1, Groups E, F and G, Class III	Standard: CE[1], CSA, FM, ATEX II 2GD F: FM Class I, Div 1, Groups A, B, C and D, Class II Div 1, Groups E, F and G, Class III	CE[1], CSA, FM, ATEX II 2G 1D	CE[1], CSA, FM, ATEX II 2G 1D	Standard: CE[1], CSA, FM, ATEX II 2G Sanitary: CSA, 3A	CE[1], CSA, FM, ATEX II 2G

[1] EMC certificate available on request.

® DERAKANE is a registered trademark of Ashland Inc.

© Siemens AG 2007

Dimensional drawings

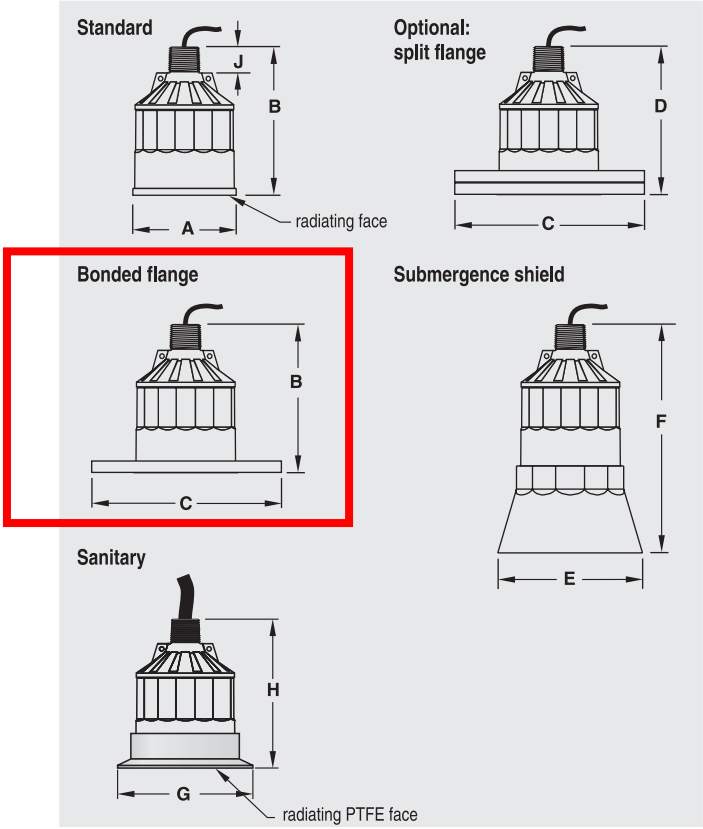

XPS and XCT ultrasonic transducer dimensions

Version				
Dimen.	**XPS-10**	**XPS-15**	**XPS-30**	**XPS-40**
A	88 mm (3.464")	121 mm (4.764")	175 mm (6.890")	206 mm (8.110")
B	122 mm (4.803")	132 mm (5.197")	198 mm (7.795")	229 mm (9.016")
C	According to ASME, DIN and JIS	n/a		
D	128 mm (5.039")	138 mm (5.433")	204 mm (8.031")	n/a
E	124 mm (4.882")	158 mm (6.220")	n/a	n/a
F	152 mm (5.984")	198 mm (7.795")	n/a	n/a
J	28 mm (1.1")	28 mm (1.1")	28 mm (1.1")	28 mm (1.1")

Version		
Dimen.	**XCT-8**	**XCT-12**
A	88 mm (3.464")	121 mm (4.764")
B	122 mm (4.803")	132 mm (5.197")
C	According to ASME, DIN and JIS	
D	128 mm (5.039")	138 mm (5.433")
E	n/a	n/a
F	n/a	n/a
G	sanitary version: 119 mm (4.68")	n/a
H	sanitary version: 122 mm (4.8")	n/a
J	28 mm (1.1")	28 mm (1.1")

Schematics

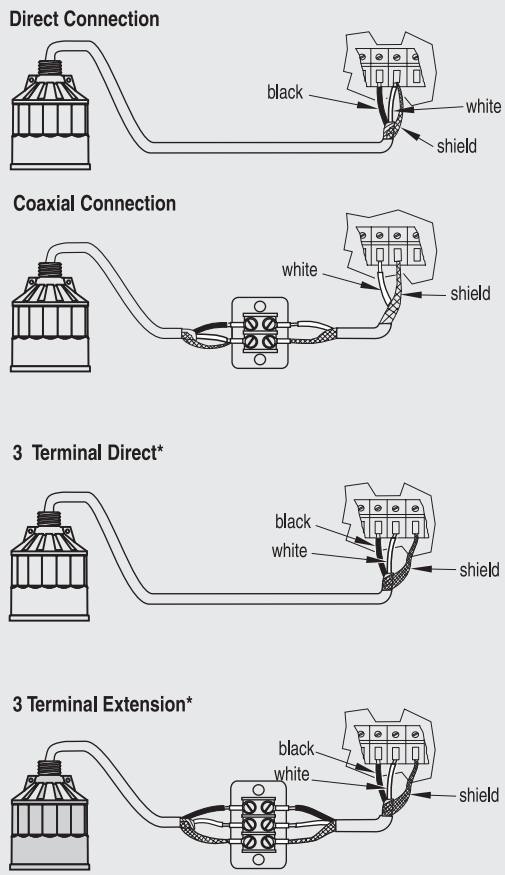

* For SITRANS LUC500, MultiRanger 100/200, HydroRanger 200

Mounting
Make particularly sure that the radiating face of the transducer is protected from damage. Mount the transducer so that it is above the maximum material level by at least the blanking value. On liquid applications, the transducer must be mounted so that the axis of transmission is perpendicular to the liquid surface. On solids applications, a Milltronics Easy Aimer should be used to facilitate aiming the transducer. Consider the optional temperature sensor when mounting the transducer.

Interconnection
Do not route cable openly or near high voltage or current runs, contactors and SCR control drives. For optimum isolation against electrical noise, run cable separately in a grounded metal conduit. Seal all thread connections to prevent ingress of moisture.

XPS and XCT ultrasonic transducer connections

© Siemens AG 2007

FMS mounting brackets

Application

Siemens Milltronics mounting brackets permit simple, fast installation of ultrasonic transducers. These rugged, high quality mounting brackets are constructed of 304 (1.4301) stainless steel and are suitable for use indoors and outdoors. They adjust to fit almost any application, saving you the time and expense of building custom brackets. Each kit includes all mounting parts.

FMS-200 universal box bracket system

Mounting of units with 1" or 2" threaded connection.

Distance from sensor to wall or beam: 20 to 31 cm (8 to 12").

The unique box design also acts as a sun shield for transducers with 1" threaded connections.

FMS-210 wall mounting set

Mounting of transducers with 1" threaded connection.

Distance from transducer to wall or beam: 12 to 48 cm (5 to 19").

FMS-220 extended wall mounting set

Mounting of transducers with 1" threaded connection.

Distance from transducer to wall or beam: 32 to 98 cm (13 to 39").

FMS-310 floor mounting set

Mounting of transducers with 1" threaded connection.

Distance from transducer to floor: 20 to 48 cm (8 to 19").

Distance from mounting support: 5 to 57 cm (2 to 22").

FMS-320 extended floor mounting set

Mounting of transducers with 1" threaded connection.

Distance from transducer to floor: 20 to 48 cm (8 to 19").

Distance from mounting support: 41 to 108 cm (16 to 43").

FMS-350 floor mounting set, bridge

Mounting of transducers with 1" threaded connection.

Distance from transducer to floor: 20 to 48 cm (8 to 19"), anywhere along the complete width of the bridge [166 cm (65")].

This kit is particularly suitable for measurements on open channels (OCM) by providing a very stable mount for the transducer above a flume or weir.

Selection and Ordering data

	Order No.
Mounting brackets for XPS-10/XCT-8 sensors	
FMS-200 universal box bracket set	**7ML1830-1BK**
FMS-210 wall mounting set	**7ML1830-1BL**
FMS-220 extended wall mounting set	**7ML1830-1BM**
FMS-310 floor mounting set	**7ML1830-1BN**
FMS-320 extended floor mounting set	**7ML1830-1BP**
FMS-350 floor mounting set, bridge	**7ML1830-1BQ**
Additional instruction manual	
FMS-200	**7ML1998-1BK61**
FMS-210	**7ML1998-1BL61**
FMS-220	**7ML1998-1BM61**
FMS-310	**7ML1998-1BN61**
FMS-320	**7ML1998-1BP61**
FMS-350	**7ML1998-1BQ61**
Note: The instruction manual should be ordered as a separate line item on the order.	

Integration

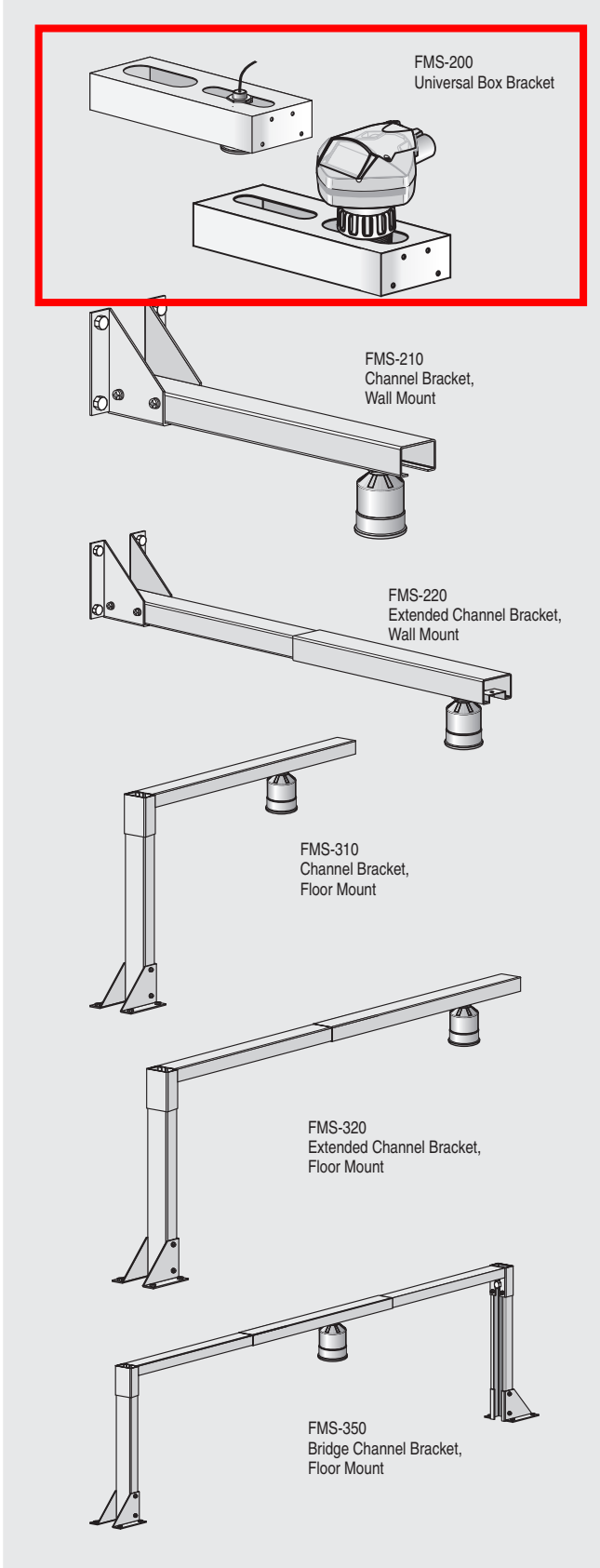

FMS mounting brackets

WASTE-TECH
a division of KUSTERS ZIMA

3.6

OVERLOAD POWER MONITOR DETAILS

OPERATION & MAINTENANCE

WENATCHEE WWTP IMPROVEMENTS
PROJECT PO913
WENATCHEE, WA

SECTION 11092 – PERFORATED PLATE SCREENS
SECTION 11095 – SCREENINGS WASHER COMPACTOR

OVERLOAD POWER MONITOR DETAILS

Screen and Washer Drive Monitor

Manufacturer:	Tsubaki
Model No.:	TSBSS05
Horsepower Range (at 400 VAC)	0.27-3.0 HP
Load Current Setting Range	0.5A – 5.0 M
Start Time Setting Range	0.2 - 30 seconds
Shock Time Setting Range	0.2 – 10 seconds
Imput Voltage:	90 VAC – 240 VAC, 50/60 Hz
Built-in Test Function	Yes
Operating Temperature Range:	-4 °F – 158 °F
UL Approval	Yes
Qty:	Total: Four (4) for two systems 1 each – Screen Drive 1 each – Washer Press Drive

"SS/SA" Series Shock Relay

TSBSS05
TSBSS30
TSBSS60
TSBSA05*
TSBSA30*
TSBSA60*

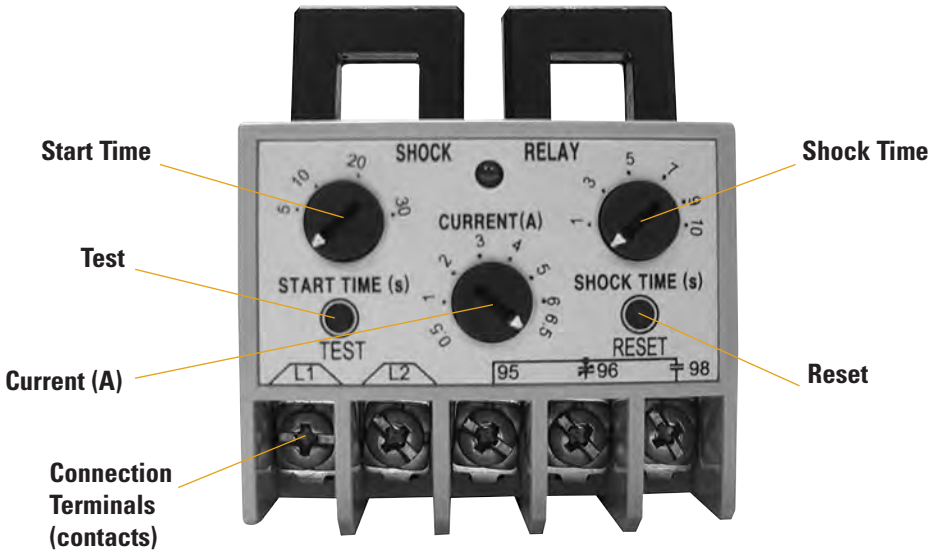

Explanation of Terms

Start Time
During startup, the current draw of a motor is greater than the running current. In order to prevent the shock relay from engaging during startup, the start time of the shock relay is adjustable from 0.2 seconds to 30 seconds.

Test
The test button simulates a current overload.

Current (A)
The trip current level is user adjustable and varies according to the shock relay model selected — see specification chart on the following page for complete details. The Shock Relay will only trip when the current draw of the motor exceeds both the current setting and the shock time setting.

Shock Time
The shock time feature allows the current overload time to be set. The shock time is adjustable from 0.2 seconds to 10 seconds. The shock relay will only trip when the current draw of the motor exceeds the trip current and when the shock time is exceeded.

Reset
The reset button will reset the shock relay after a current overload.

Connection Terminals (contacts)
L1 & L2: Used to provide power to the shock relay.
95, 96 & 98: Provide output from the shock relay.
The application - such as a motor - can be wired into these terminals.
When the shock relay trips, the circuit opens and the application stops.

*TSBSA series: Identical to the TSBSS series except the TSBSA shock relay automatically resets when the motor power is disconnected.

TSUBAKI

Safeguarding your equipment

"SS/SA" Series Shock Relay Specifications

SPECIFICATIONS / MODEL	TSBSSA05	TSBSSA30	TSBSSA60
Built-in or External Current Transformer	Built-in	Built-in	Built-in
Motor Horsepower at 200 VAC	0.08hp ~ 1.5hp	2hp ~ 7.5hp	10hp ~15hp
Motor Horsepower at 400 VAC	0.27hp ~ 3hp	5hp ~ 15hp	20hp ~ 30hp
Load Current Setting Range	0.5A ~ 5A	3A ~ 30A	5A ~ 60A
Trip Output Relay - contact rating	3A load	3A load	3A load
Trip Output Relay - status	Normally Loaded	Normally Loaded	Normally Loaded
Start Time Setting Range	0.2 ~ 30 sec.	0.2 ~ 30 sec.	0.2 ~ 30 sec.
Shock Time Setting Range	0.2 ~ 10 sec.	0.2 ~ 10 sec.	0.2 ~ 10 sec.
Input Voltage	90VAC to 240VAC 50/60HZ	90VAC to 240VAC 50/60HZ	90VAC to 240VAC 50/60HZ
Test Function Built-in	Yes	Yes	Yes
Mounting available for 35mm DIN rail or panel	Yes	Yes	Yes
Operating Temperature Range	-4°F ~ 158°F	-4°F ~ 158°F	-4°F ~ 158°F
UL Approval	Yes	Yes	Yes

"SS/SA" Series Shock Relay Dimensions (mm)

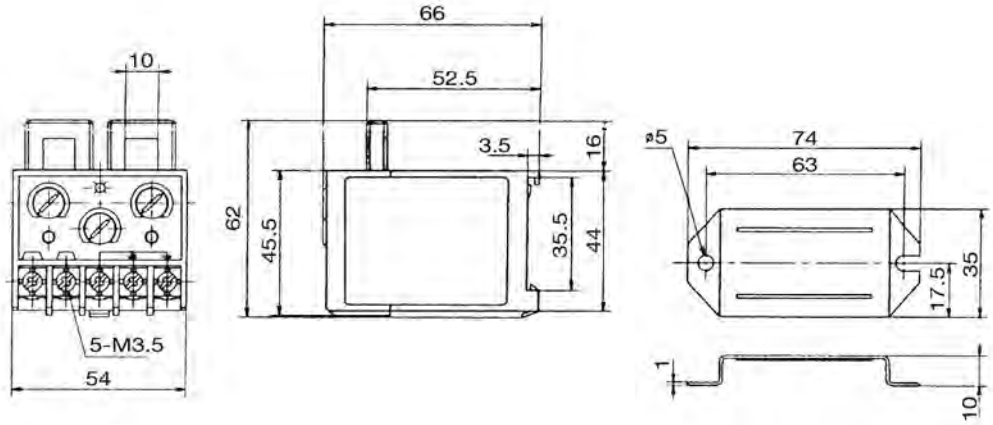

"SS/SA" Series Shock Relay Typical Wiring Diagram

Three-Phase

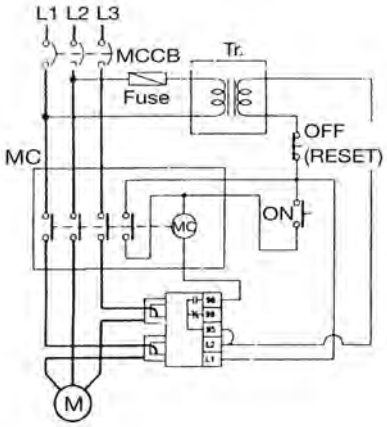

Single-Phase

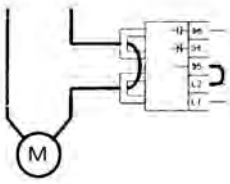

CB:	Circuit Breaker	**Off:**	Stop Switch
MC:	Magnetic Contactor	**M:**	Motor
On:	Start Switch	**Tr:**	Transformer

TSUBAKI

WASTE▪TECH
a division of KUSTERS ZIMA

SECTION 4

FSM FILTERSCREEN

WASTE▪TECH
a division of KUSTERS ZIMA

4.1

TECHNICAL DATA and MATERIALS OF CONSTRUCTION

OPERATION & MAINTENANCE

WENATCHEE WWTP IMPROVEMENTS
PROJECT PO913
WENATCHEE, WA

SECTION 11092 – PERFORATED PLATE SCREENS
SECTION 11095 – SCREENINGS WASHER COMPACTOR

TECHNICAL DATA & MATERIALS OF CONSTRUCTION

Number of Screens:	2
Maximum Flow per Screen (peak):	15 MGD
Average Flow per Screen:	3 MGD
Channel Width:	3.0 ft
Channel Depth:	5.0 ft
Maximum Upstream Water Level:	3.2 ft
Maximum Headloss allowable at Maximum Flow: Headloss at 50% Blinding Factor:	1.2 ft
Maximum Differential Head Screen will Withstand:	5.5 ft.
Screenings Discharge Height above Finished Floor:	4.0 ft
Perforation diameter:	8 mm (5/16” nominal)
Screen Angle from Horizontal:	65º
Screen Side Frame:	3/16” (5mm) Thick; 316L Stainless Steel
Screen Panels:	316L Stainless Steel, 1/8” Thick
Lifting Times:	Every 5th Panel
Side Seals, Channel:	Formed 316 Stainless Steel Side Brackets
Front Screen Covers:	14 Ga. Thickness; 316L SS covers
Rear Screen Covers:	14 Ga. Thickness; 316L SS covers
Discharge Chute:	316L SS, 14 Ga.
Rotating Brush:	Nylon Bristles, SS Shaft, Adjustable

WASTE▪TECH
a division of KUSTERS ZIMA

MATERIAL OF CONSTRUCTION

Screen Side Frame:	3/16” (5mm) Thick; 316L Stainless Steel
Drive Shafts:	CK45 Special material
Sprockets:	Two Piece, CK45 Special material
Lower Sprocket:	CK45 Special material
Lower Sprocket Bushing:	Bronze Bushing, 304 Stainless Steel Stub Shaft with Buna N Seals
Screen Panels:	316L Stainless Steel; ⅛” Thick; or wear resistant heat treated 400 Stainless Steel
Perforation Diameter:	6mm
Lifting Tines:	Every 5th Panel
Side Seals:	3” Thick, Lateral 304L stainless steel side brackets with non-metalic material insert
Bottom Seals:	3” Thick, brush seal and neoprene flap
Front Screen Covers:	14 Ga. Thickness; 316L Stainless Steel Covers, Gasketed with Hinged Inspection Hatches
Rear Screen Covers:	14 Ga. Thickness; 316L Stainless Steel Covers, Gasketed
Discharge Chute:	316L Stainless Steel, 14-gauge
Rotating Brush:	Nylon Bristles, 304 Stainless Steel Shaft, adjustable
Spray Bar:	304 Stainless Steel, 1” NPT
Screen Chain:	Heavy Duty Drive Links – CK45 Steel
Screen Lubrication System:	Common Lubrication Location; 304 Stainless Steel Lubrication Tubing
Screen Hardware:	316 Stainless Steel
Drive Mechanism:	SEW Eurodrive 3 HP SA87, Inverter Duty
Brush Drive:	SEW Eurodrive 2 HP SA67
Roller Drive:	SEW Eurodrive ½ HP SA47

WASTE▪TECH
a division of KUSTERS ZIMA

SKETCHES:
FILTER SCREEN EFFLUENT FLOW BYPASS & SOLIDS LIFTING TINES

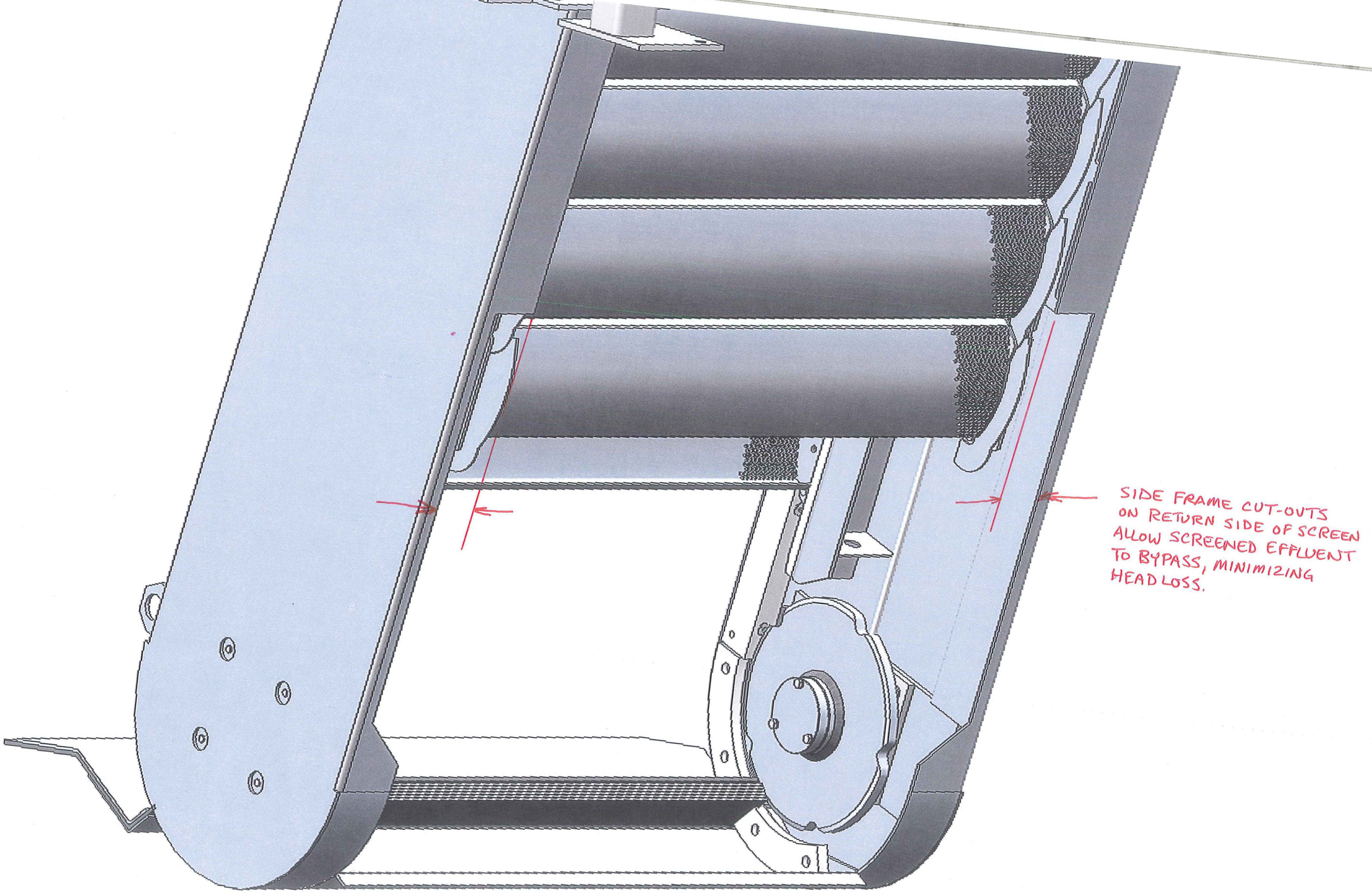
SIDE FRAME CUT-OUTS
ON RETURN SIDE OF SCREEN
ALLOW SCREENED EFFLUENT
TO BYPASS, MINIMIZING
HEAD LOSS.

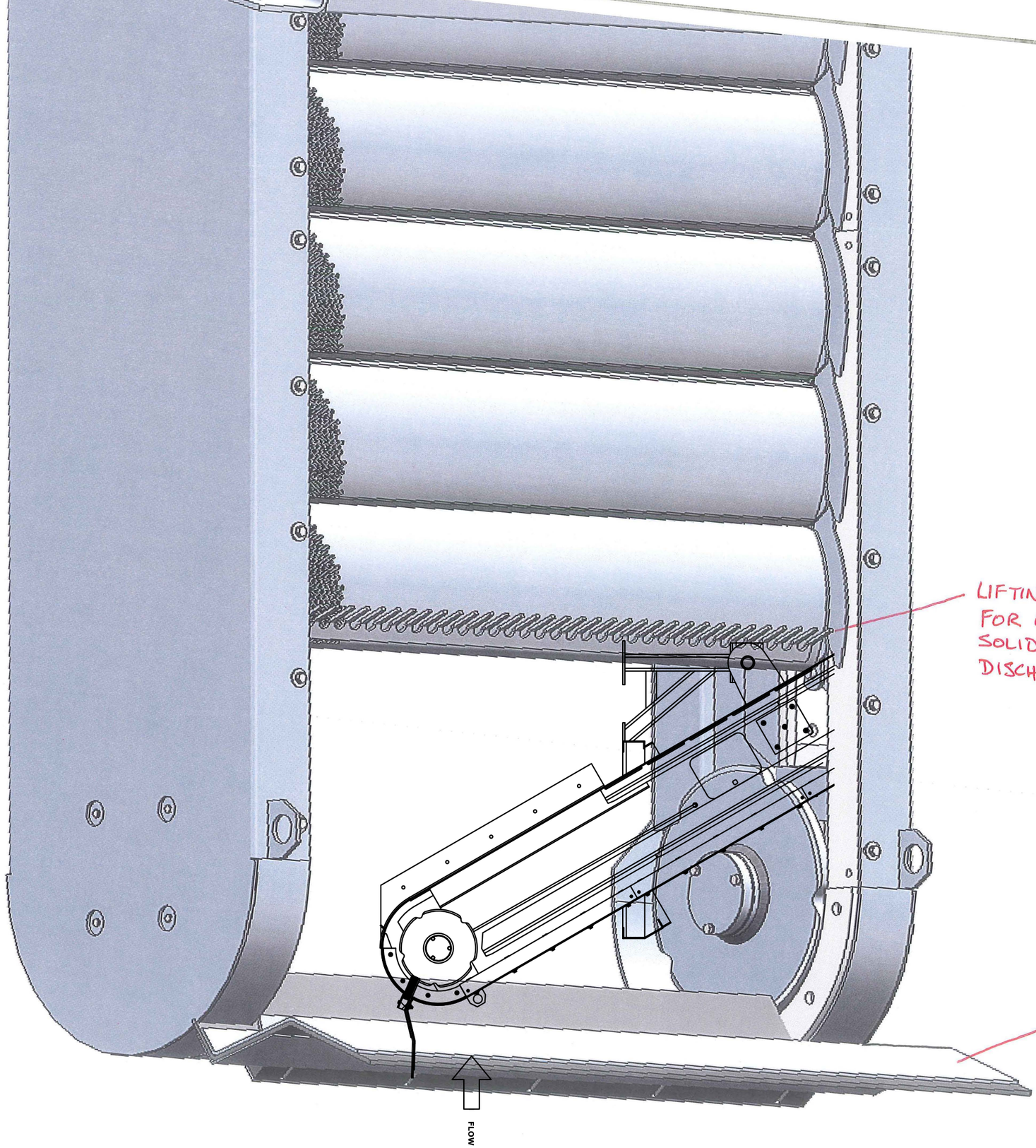

LIFTING TINES EVERY FIFTH PANEL, FOR CONVEYING LARGER DIAMETER SOLIDS OUT OF INFLUENT AND INTO DISCHARGE CHUTE.

BOTTOM PLATE WITH BRUSH PROVIDES EFFECTIVE SEAL & GUIDES LARGER DIAMETER SOLIDS INTO THE INFLUENCE OF LIFTING TINES.

WASTE-TECH
a division of KUSTERS ZIMA

4.2

GEAR REDUCER & MOTOR DETAILS

OPERATION & MAINTENANCE

WENATCHEE WWTP IMPROVEMENTS
PROJECT PO913
WENATCHEE, WA

SECTION 11092 – PERFORATED PLATE SCREENS
SECTION 11095 – SCREENINGS WASHER COMPACTOR

GEAR REDUCER DETAILS – SCREEN DRIVE

Manufacturer:	SEW Eurodrive
Model no.:	SA 87
Type:	Helical gear reducer
Ratio:	258.18:1
AGMA rating:	II
Service Factor:	1.5
Output RPM:	6.8 RPM
Weight:	193 lbs.
Motor Mounting:	C-Face, AM 182 Adaptor

MOTOR DETAILS – SCREEN DRIVE

Manufacturer:	Teco Westinghouse
Model No.:	EP0034C
Hp:	3HP
Voltage:	230-460/3Ph/60Hz
Full Load Amperage:	3.89 A @ 460V
Type:	TEFC; Premium Efficiency, Class 1 Div. 2
RPM:	1800
NEMA Design:	B
Insulation:	Class F with Class B temp. rise
Weight:	100 lbs.
Service Factor:	1.15
Frame Type:	182TC
Winding:	B

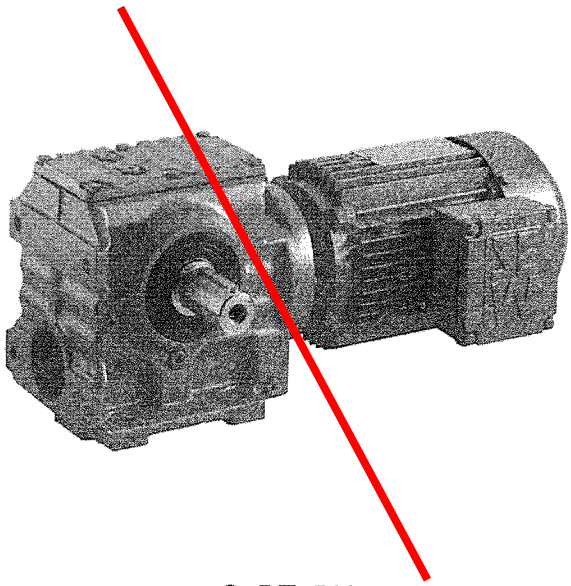

S..DT..DV..

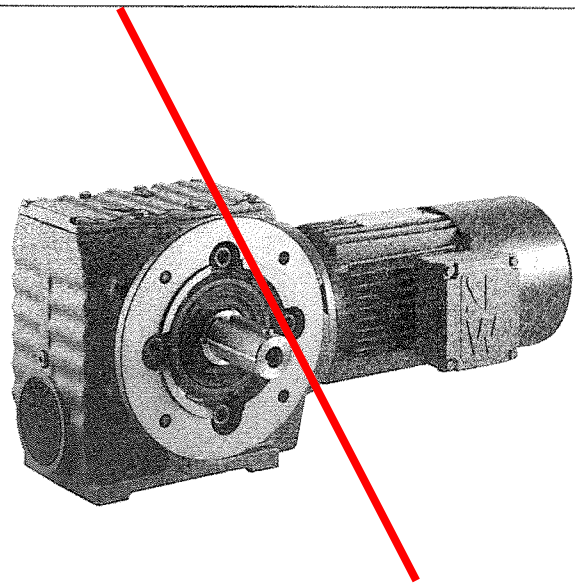

SF..DT../DV..BM(G)

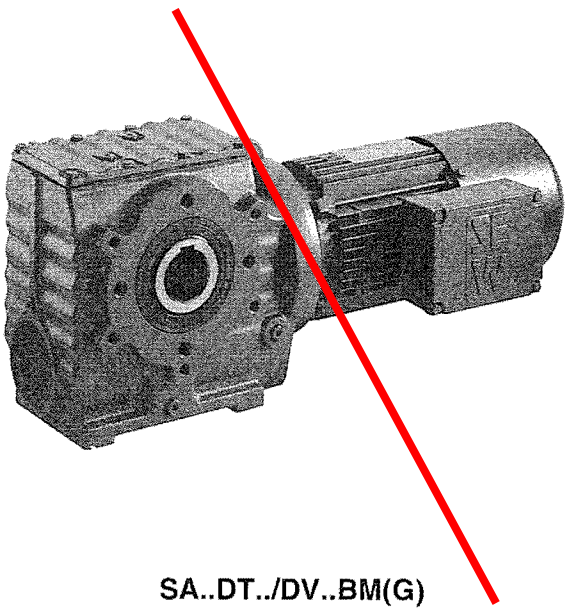

SA..DT../DV..BM(G)

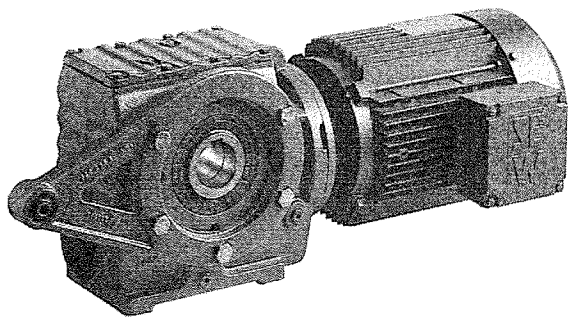

SA..TDT../DV..

	S87					AM143			AM145			AM182			AM184		
Ratio i	Output Speed n_a rpm	Input Power P_{emax} HP	Output Torque T_{amax} lb-in	Stages Pri.	Stages Sec.	Input Power P_e HP	Output Torque T_a lb-in	Output OHL F_{Ra} lb	Input Power P_e HP	Output Torque T_a lb-in	Output OHL F_{Ra} lb	Input Power P_e HP	Output Torque T_a lb-in	Output OHL F_{Ra} lb	Input Power P_e HP	Output Torque T_a lb-in	Output OHL F_{Ra} lb
288.00	6.10	2.79	20200	2	-	1	6420	6730	2	13800	6550	-	-	-	-	-	-
258.18	6.80	3.19	20000	2	-	1	5710	6730	2	12400	6590	3	18700	6370	-	-	-
222.40	7.90	3.46	19600	2	-	1	4820	6750	2	10700	6640	3	16100	6460	3.46	19600	6320
202.96	8.60	3.86	19400	2	-	1	4380	6750	2	9740	6660	3	14700	6530	3.86	19400	6320
180.00	9.70	4.12	18900	2	-	1	3810	6750	2	8580	6680	3	13100	6570	4.12	18900	6350
151.30	12	4.66	18200	2	-	1	3100	6750	2	7170	6710	3	11000	6640	4.66	18200	6370
139.05	13	5.05	17900	2	-	1	2790	6750	2	6550	6730	3	10100	6660	5	17600	6410
123.48	14	5.45	17300	2	-	1	2390	6750	2	5750	6730	3	8940	6680	5	15700	6480
110.40	16	5.85	16800	2	-	-	-	-	2	5090	6750	3	7970	6710	5	14100	6550
99.26	18	6.25	16300	2	-	-	-	-	2	4510	6750	3	7080	6710	5	12600	6590
91.20	19	4.79	13500	2	-	1	2480	6750	2	5350	6750	-	-	-	-	-	-
86.15	20	6.92	15700	2	-	-	-	-	2	3850	6750	3	6110	6730	5	10900	6640
81.76	21	5.59	14200	2	-	1	2210	6750	2	4780	6750	3	7170	6710	-	-	-
77.14	23	7.32	15000	2	-	-	-	-	-	-	-	3	5440	6750	5	9740	6660
70.43	25	6.52	14200	2	-	1	1860	6750	2	4070	6750	3	6150	6730	5	10600	6640
64.27	27	7.18	14200	2	-	1	1650	6750	2	3720	6750	3	5620	6730	5	9650	6660
57.00	31	7.98	14200	2	-	1	1430	6750	2	3230	6750	3	4960	6750	5	8580	6680
47.91	37	9.44	14200	2	-	1	1160	6750	2	2700	6750	3	4120	6750	5	7170	6710
44.03	40	10.24	14200	2	-	1	1040	6750	2	2430	6750	3	3760	6750	5	6590	6730
39.10	45	11.57	14200	2	-	1	890	6750	2	2170	6750	3	3320	6750	5	5840	6660
34.96	50	12.90	14200	2	-	-	-	-	2	1900	6750	3	2960	6710	5	5220	6480
31.43	56	14.23	14200	2	-	-	-	-	2	1670	6620	3	2610	6530	5	4650	6320
27.28	64	16.36	14200	2	-	-	-	-	2	1420	6350	3	2260	6280	5	4030	6100
25.50	69	13.17	11000	2	-	1	675	6280	2	1520	6140	3	2300	6030	5	4030	5810
21.43	82	15.56	11000	2	-	1	540	5960	2	1260	5870	3	1900	5760	5	3360	5580
19.70	89	16.89	11000	2	-	1	485	5830	2	1140	5740	3	1760	5650	5	3050	5470
17.49	100	19.02	11000	2	-	1	415	5630	2	1000	5540	3	1550	5470	5	2700	5310
15.64	112	21.15	11000	2	-	-	-	-	2	880	5380	3	1370	5310	5	2430	5150
14.06	124	23.54	11000	2	-	-	-	-	2	780	5220	3	1220	5150	5	2170	5020
12.21	143	26.60	11000	2	-	-	-	-	2	665	5020	3	1040	4950	5	1860	4840
10.93	160	27.93	10000	2	-	-	-	-	-	-	-	3	920	4820	5	1660	4700
9.07	193	27.93	8410	2	-	-	-	-	-	-	-	3	750	4570	5	1360	4480

Please consult your SEW-Eurodrive Assembly Center for additional speed (RPM) selections and dimension pages not listed.

AM182-365

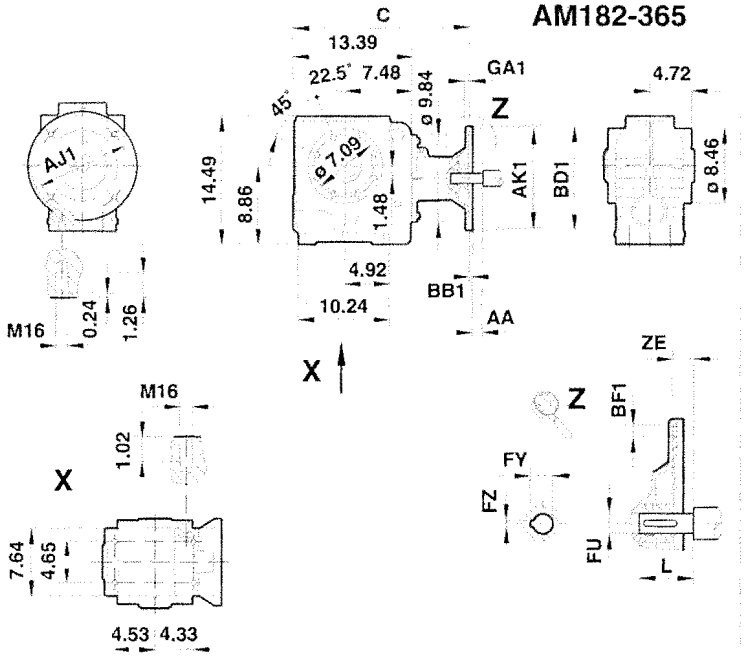

S..87/T..

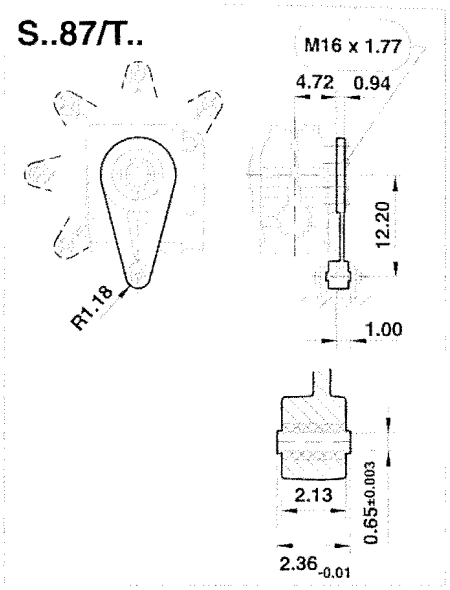

SA87..

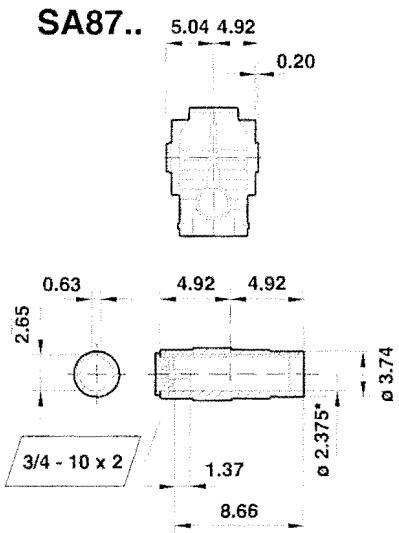

SH87..

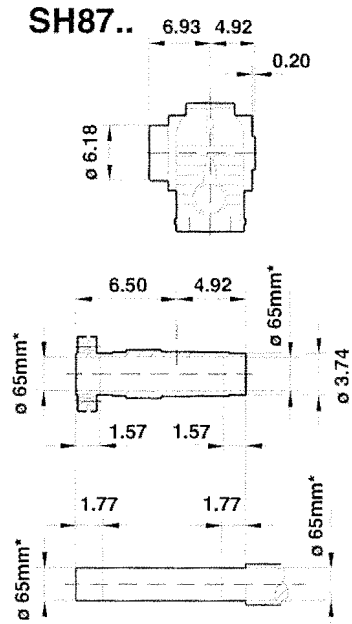

		AK1	GA1	AJ1	BB1	BD1	C	AA	BF1	ZC	ZE	FU	L	FY	FZ
SA87 SH87	AM182	8.50	0.39	7.250	0.20	8.98	18.69	0.12	0.59	5.30	0.65	1.125	2.72	1.24	0.250
	AM184	8.50	0.39	7.250	0.20	8.98	18.69	0.12	0.59	5.30	0.65	1.125	2.72	1.24	0.250
	AM213/215	8.50	0.43	7.250	0.20	8.98	20.61	0.25	0.59	7.22	0.62	1.375	3.35	1.52	0.312
	AM254/256	8.50	0.47	7.250	0.20	8.98	22.60	0.25	0.59	9.21	0.35	1.625	3.98	1.80	0.375
	AM284/286	10.50	0.59	9.000	0.20	11.26	22.88	0.25	0.59	9.49	0.62	1.875	4.61	2.10	0.500

*Refer to page 101 for tolerance information
Dimensions subject to change without notice

Refer to page 94 for Alternate Shafts
See page 99 for Compound Reducer Information

SA/SH47-97

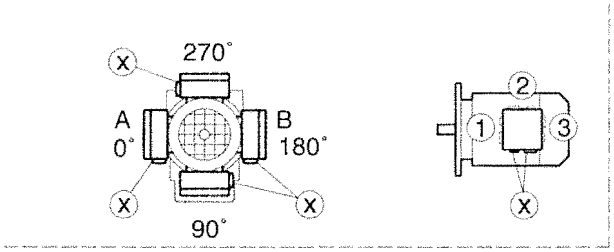

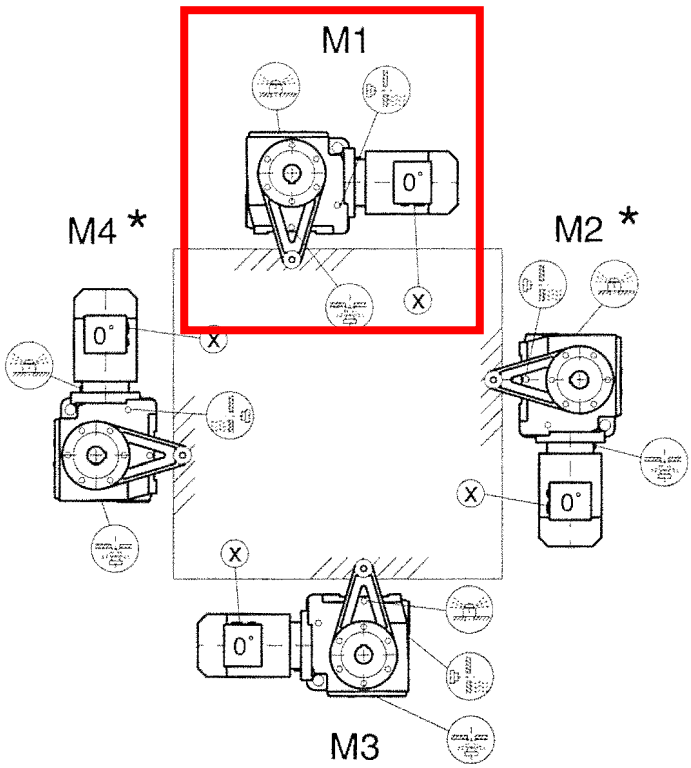

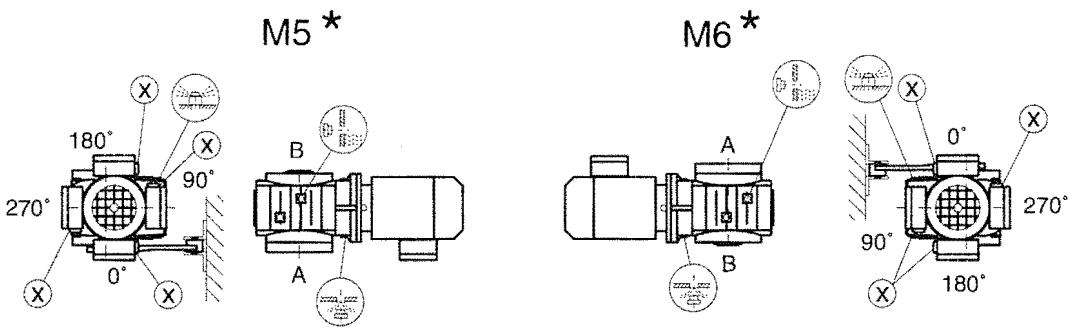

* → page 11

The approximate lubricant in US **gallons and liters** per mounting position is as follows:

Gear Unit	Mounting Position											
	M1		M2		M3 [1]		M4		M5		M6	
	Gallons	Liters	Gallons	Liters	Gallons	Liters	Gallons	Liters	Gallons	Liters	Gallons	Liters
S37	0.07	0.25	0.11	0.4	0.13	0.5	0.16	0.6	0.11	0.4	0.11	0.4
S47	0.09	0.35	0.21	0.8	0.18 (0.24)	0.7 (0.9)	0.29	1.1	0.21	0.8	0.21	0.8
S57	0.13	0.5	0.32	1.2	0.26 (0.32)	1 (1.2)	0.40	1.5	0.34	1.3	0.34	1.3
S67	0.26	1	0.53	2	0.58 (0.82)	2.2 (3.1)	0.85	3.2	0.69	2.6	0.69	2.6
S77	0.50	1.9	1.11	4.2	0.98 (1.43)	3.7 (5.4)	1.59	6	1.16	4.4	1.16	4.4
S87	0.87	3.3	2.14	8.1	1.82 (2.75)	6.9 (10.4)	3.17	12	2.22	8.4	2.22	8.4
S97	1.80	6.8	3.96	15	3.54 (4.76)	13.4 (18)	5.94	22.5	4.49	17	4.49	17
SF37	0.07	0.25	0.11	0.4	0.13	0.5	0.16	0.6	0.11	0.4	0.11	0.4
SF47	0.11	0.4	0.24	0.9	0.24 (0.29)	0.9 (1.1)	0.32	1.2	0.26	1	0.26	1
SF57	0.13	0.5	0.32	1.2	0.26 (0.40)	1 (1.5)	0.42	1.6	0.37	1.4	0.37	1.4
SF67	0.26	1	0.58	2.2	0.61 (0.79)	2.3 (3)	0.85	3.2	0.71	2.7	0.71	2.7
SF77	0.50	1.9	1.08	4.1	1.03 (1.53)	3.9 (5.8)	1.72	6.5	1.29	4.9	1.29	4.9
SF87	1.00	3.8	2.11	8	1.88 (2.67)	7.1 (10.1)	3.17	12	2.40	9.1	2.40	9.1
SF97	1.96	7.4	3.96	15	3.65 (4.97)	13.8 (18.8)	6.24	23.6	4.76	18	4.76	18
SA/SH37 SAF/SHF37 SAZ/SHZ37	0.07	0.25	0.11	0.4	0.13	0.5	0.16	0.6	0.11	0.4	0.11	0.4
SA/SH47 SAF/SHF47 SAZ/SHZ47	0.11	0.4	0.21	0.8	0.18 (0.24)	0.7 (0.9)	0.29 [2]	1.1 [2]	0.21	0.8	0.21	0.8
SA/SH57 SAF/SHF57 SAZ/SHZ57	0.13	0.5	0.29	1.1	0.26 (0.40)	1 (1.5)	0.42	1.6	0.32	1.2	0.32	1.2
SA/SH67 SAF/SHF67 SAZ/SHZ67	0.26	1	0.53	2	0.48 (0.69)	1.8 (2.6)	0.77	2.9	0.66	2.5	0.66	2.5
SA/SH77 SAF/SHF77 SAZ/SHZ77	0.48	1.8	1.03	3.9	0.95 (1.32)	3.6 (5)	1.56	5.9	1.19	4.5	1.19	4.5
SA/SH87 SAF/SHF87 SAZ/SHZ87	1.00	3.8	1.96	7.4	1.59 (2.30)	6 (8.7)	2.96	11.2	2.11	8	2.11	8
SA/SH97 SAF/SHF97 SAZ/SHZ97	1.85	7	3.70	14	3.01 (4.23)	11.4 (16)	5.55	21	4.15	15.7	4.15	15.7

[1] On compound gear units the primary (larger) gear unit is provided with the oil quantity in parenthesis.

[2] When combined with a 2-pole motor at M4 mounting position, the oil quantity must be reduced to 0.28 gallons (1.05 liters).

For compound drives the R reducer requires its own oil filling as shown in the chart:

Gear Unit	Mounting Position					
	M1/M3/M5/M6		M2		M4	
	Gallons	Liters	Gallons	Liters	Gallons	Liters
R17	0.07	0.25	0.16	0.6	0.16	0.6
R37	0.11	0.4	0.24	0.9	0.29	1.1
R57	0.21	0.8	0.48	1.8	0.53	2

Lubricant table

	6) °C -50 0 +50 +100	DIN (ISO)	ISO, NLGI	Mobil®	Shell	Klüber	ARAL	BP	Tribol	TEXACO	Optimol	FUCHS
R...	Standard -10 +40	CLP(CC)	VG 220	Mobilgear 630	Shell Omala 220	Klüberoil GEM 1-220	Aral Degol BG 220	BP Energol GR-XP220	Tribol 1100/220	Meropa 220	Optigear BM 220	Renolin CLP220
K...(HK...)	-25 +80	CLPPG	VG 220	Mobil Glygolyle 30	Shell Tivela WB	Klübersynth GH 6-220	Aral Degol GS 220	BP Enersyn SG-XP220	Tribol 800/220	Synlube CLP220	Optiflex A 220	
	4) -40 +80	CLPHC	VG 220	Mobil SHC 630	Shell Omala 220 HD	Klübersynth EG 4-220	Aral Degol PAS 220		Tribol 1510/220	Pinnacle EP220	Optigear Synthetic A 220	Renolin Unisyn CLP220
	4) -40 +40		VG 150	Mobil SHC 629		Klübersynth EG 4-150				Pinnacle EP150		
	-20 +25	CLP(CC)	VG 150 VG 100	Mobilgear 627	Shell Omala 100	Klüberoil GEM 1-150	Aral Degol BG 100	BP Energol GR-XP100	Tribol 1100/100	Meropa 150	Optigear BM 100	Renolin CLP150
F...	-30 +10	HLP(HM)	VG 68-46 VG 32	Mobil D.T.E. 13M	Shell Tellus T 32	Klüberoil GEM 1-68	Aral Degol BG 46		Tribol 1100/68	Rando EP Ashless 46	Optigear 32	Renolin B 46 HVI
	4) -40 +10	CLPHC	VG 32	Mobil SHC 624		Klüber-Summit HySyn FG-32				Cetus PAO 46		
	4) -40 -20	HLP(HM)	VG 22 VG 15	Mobil D.T.E. HM	Shell Tellus T 15	Isoflex MT 30 ROT		BP Energol HLP-HM 10		Rando HDZ 15		
S...(HS...)	Standard 0 +40	CLP(CC)	VG 680	Mobilgear 636	Shell Omala 680	Klüberoil GEM 1-680	Aral Degol BG 680	BP Energol GR-XP680	Tribol 1100/680	Meropa 680	Optigear BM 680	Renolin CLP680
	-20 +60	CLPPG	VG 680 1)	Mobil Glygoyle HE 680		Klübersynth GH 6-680		BP Enersyn SG-XP680	Tribol 800/680	Synlube CLP680		
	4) -30 +80	CLPHC	VG 460	Mobil SHC 634	Shell Omala 460 HD	Klübersynth EG 4-460				Pinnacle EP460		
	4) -40 +10		VG 150	Mobil SHC 629		Klübersynth EG 4-150				Pinnacle EP150		
	-20 +10	CLP(CC) HLP(HM)	VG 150 VG 100	Mobilgear 627	Shell Omala 100	Klüberoil GEM 1-150	Aral Degol BG 100	BP Energol GR-XP100	Tribol 1100/100	Meropa 100	Optigear BM 100	Renolin CLP150
	-25 +20	CLPPG	VG 220 1)	Mobil Glygoyle 30		Klübersynth GH 6-220			Tribol 800/220	Synlube CLP220	Optiflex A 220	
	4) -40 0	CLPHC	VG 32	Mobil SHC 624		Klüber-Summit HySyn FG-32				Cetus PAO 46		
R..., K...(HK...), F..., S...(HS...)	4) -30 +40	HCE 7)	VG 460		Shell Cassida Fluid GL460	Klüberoil 4UH1-460	Aral Eural Gear 460				Optileb GT 460	
	-20 +40	E 8)	VG 460			Klüberbio CA2-460	Aral Degol BAB 460				Optisynt BS 460	
W...(HW...)	Standard -20 +40	SEW PG	VG 460 2)			Klüber SEW HT-460-5						
	4) -40 +10	API GL5	SAE 75W90 (~VG 100)	Mobilube SHC 75 W90-LS								
	-20 +40	CLPPG 7)	VG 460 3)			Klübersynth UH1 6-460						
R32 R302	-25 +60	DIN 51 818 5)	00	Glygoyle Grease 00	Shell Tivela Compound A	Klübersynth GE 46-1200				Multifak 6833 EP00		
	Standard -15 +40		000 - 0	Mobilux EP004	Shell Alvania GL00		Aralub MFL00	BP Energrease LS-EP00		Multifak EP000	Longtime PD 00	Renolin SF 7 - 041

The lubricant table above shows the permitted lubricants for SEW gear units. Please note the following key to the lubricant table.

Key to the lubricant table

CLP	= Mineral oil
CLP PG	= Polyglycol (W gear units, conforms to USDA-H1)
CLP HC	= Synthetic hydrocarbons
E	= Ester oil (water pollution danger category WGK 1)
HCE	= Synthetic hydrocarbons + ester oil (USDA - H1 certification)
HLP	= Hydraulic oil
	= Synthetic lubricant (= synthetic-based anti-friction bearing grease)
	= Mineral lubricant (= mineral-based anti-friction bearing grease)

1) Helical-worm gear units with PG oil: Please contact SEW
2) Special lubricant for Spiroplan® gear units only
3) Recommendation: Select SEW $f_B \geq 1.2$
4) Note critical starting behavior at low temperatures!
5) Low-viscosity grease
6) Ambient temperature
7) Lubricant for the food processing industry
8) Biodegradable oil (lubricant for use in agriculture, forestry and water resources)

8. Design and Operating Notes

8.1. Lubricants

General Information

Unless a special arrangement is made, SEW supplies the drives with a lubricant fill specifically for the gear unit and mounting position. The decisive factor is the mounting position (M1 – M6, Refer to "Mounting Positions" on page 52) specified when ordering the drive. You must adapt the lubricant fill to any subsequent changes made to the mounting position. Refer to Lubricant fill quantities on page 78.

Anti-friction bearing greases

The anti-friction bearings in SEW gear units are given a factory-fill with the greases listed in the following table. SEW recommends regreasing anti-friction bearings with a grease fill at the same time as changing the oil.

	Ambient temperature	Manufacturer	Type
Anti-friction bearing in gear unit	-30 °C – +60 °C	Mobil	Mobilux EP 2
	-40 °C – +80 °C	Mobil	Mobiltemp SHC 100
Special greases for anti-friction bearings in gear units:			
Biodegradable oil	-30 °C – +40 °C	Aral	Aral Eural Grease EP 2
Lubricant for Food Processing Industry	-20 °C – +40 °C	Klüber	Klüberbio M32-82

The following grease quantities are required:

- For fast-running bearings (motor and gear unit input end): Fill the cavities between the roll barrels one third full with grease.
- For slow-running bearings (in gear units and gear unit output end): Fill the cavities between the roll barrels two thirds full with grease.

Introduction

The SEW-Eurodrive Helical-Worm Gear Units are designed for continuous duty under difficult operating conditions. Only materials of the highest quality are used in the manufacture of the units. These units have the following standard construction features:

- Gearcase and flanges of high strength gray cast iron SAE Class 30.
- Double seals on output shafts with additional inner seal made of Viton®.
- Captured keys on input and output shafts.
- Foot mounted, flange mounted, flange mounted with hollowshaft, or shaft mounted.

Efficiency

The efficiency of the gear units is mostly determined by the gearing and bearing friction, and ranges up to approximately 92%. However, due to the sliding friction of the worm gearing, the actual efficiency depends upon the gear ratio of the worm stage and the input speed.

Please see the tables in the current Speed Reducer Catalog for efficiencies by ratio and input speed.

The helical-worm gear units have an input helical gear stage which reduces the ratio of the worm gear stage and as a result improves the overall efficiency as compared to a gear unit with a worm gear only.

The rated efficiencies are achieved if the gear unit has been correctly run in, has achieved its nominal operating temperature, has the proper lubrication, and is operating within its torque rating.

Backdriving

With respect to torque driving back from the output shaft, the backdriving efficiency $\eta' = 2 - \frac{1}{\eta}$ is far less favorable than the forward efficiency η and may need to be taken into account.

The low backdriving efficiency may provide some braking effect in certain instances but since the actual efficiency is dependent on many factors including ambient temperature and worm speed, we request you submit full details to our engineering department if this braking effect is required.

Since the SEW-Eurodrive Helical-Worm gear units have fairly high efficiency, they can not be considered as self-locking, and should not be used if the self-locking effect is required.

Input Power, Output Torque, and Speed

The details on power, torque, and speed given in the selection tables always refer to the mounting position M1 or similar mounting position with standard features, standard ambient conditions, and standard lubricants. Depending upon ratio, increased output power ratings may be achieved through the use of special lubricants. Please consult your SEW-Eurodrive representative.

The output speeds have been rounded up or down. The actual output speed may vary slightly due to the motor frame size, the loading, or the supply voltage.

Design Variations

In addition to the versions shown in the accompanying pages, the Helical-Worm Gear Units are also available with the combination of double shaft, double flange or flange opposite shaft mount.

Additional features available for the Helical-Worm Gear units are:

- Adapters for IEC or NEMA C-Face motors.
- Motor mounting platforms and scoops.
- Adapters for torque limiting couplings.
- Corrosion protection.
- Torque arm attachment.
- Shrink disc shaft mounting.

Please contact your SEW-Eurodrive representative for additional information.

Abbreviations

The following abbreviations are used in the selection tables:

f_B	Service Factor
F_{Ra}	Permissible output overhung load (lb) at the midpoint of the output shaft extension
F_{Re}	Permissible input overhung load (lb) at the midpoint of the input shaft extension
i	Gear unit ratio
i_w	Worm gear stage ratio
η	Efficiency
n_a	Output speed in rpm
n_e	Input speed in rpm
P_a	Rated output power (Hp)
P_e	Calculated power input into the gear unit (Hp)
	P_e is calculated from $T_{a\,max}$ by taking into account the gear units' efficiency under standard operating conditions. For calculated P_e less than .2Hp, a dash (—) is shown in the respective selection tables since the actual values are subject to large variations.
P_n	Motor rated power (HP)
T_a	Output torque (lb-in.) with reference to the driving motor
$T_{a\,max}$	Maximum permissible output torque (lb-in.) at $f_B = 1.0$

Dimension Page Notes

The dimension sheets are valid for standard units with various basic features. In particular, motor accessories such as canopies, ventilators, etc. will alter the basic dimensions. Please refer to the respective accessory dimension pages for additional dimensions.

Motors from frame size DV112 are supplied with lifting eye bolts which can be removed. Smaller motors do not have lifting eye bolts.

Certified dimension sheets are available from your SEW-Eurodrive Assembly Center.

Viton® is a registered trademark of DuPont Dow Elastomers

Unit Selection

In order to select the most suitable gear unit it is essential that a thorough knowledge of the characteristics of the driven machine are known. The gear units are normally designed for constant torque load and only a few starts/stops. If these conditions do not exist, it is necessary to determine a service factor, $f_{B\,TOTAL}$, where $f_{B\,TOTAL} = f_B \cdot f_{B1} \cdot f_{B2}$

f_B Is determined by the start/stop frequency, Load Class, and the daily operating time.

f_{B1} Is determined by the ambient temperature.

f_{B2} Is determined by the cyclic duration factor.

f_B, f_{B1}, f_{B2} service factors are shown in the diagrams that follow.

For gearmotors, the appropriate service factor taken from the diagram is then compared with the service factor given with each speed/power combination listed in the gearmotor selection tables. To ensure a long, trouble free service life it is essential that the unit selected has a service factor equal to, or greater than, that determined from the diagram.

Load Classification

I = Uniform load. Permissible inertia acceleration factor ≤0.2

II = Moderate shock load. Permissible inertia acceleration factor ≤3.0

III = Heavy shock load. Permissible inertia acceleration factor ≤10

For inertia acceleration factor > 10, please contact your nearest SEW-Eurodrive representative.

$$\text{Inertia acceleration factor} = \frac{J_L}{J_m}$$

Where: J_L = Reflected Load Inertia
J_m = Motor Inertia

All external load inertias, J, must be reflected back to the input side of the gear unit.

$$\text{Example: } J_L = J \times \frac{1}{(\text{Gear Ratio})^2}$$

Included in the number of starts and stops per hour must be all regenerative brake actions and the speed changes from high to low speed as experienced with multi-speed motors.

Example: Load Class I with 200 starts and stops per hour and operating time of 24 hours per day gives f_B = 1.36.

AGMA

For Service Factors using AGMA criteria, please refer to the guidelines on page 35 .

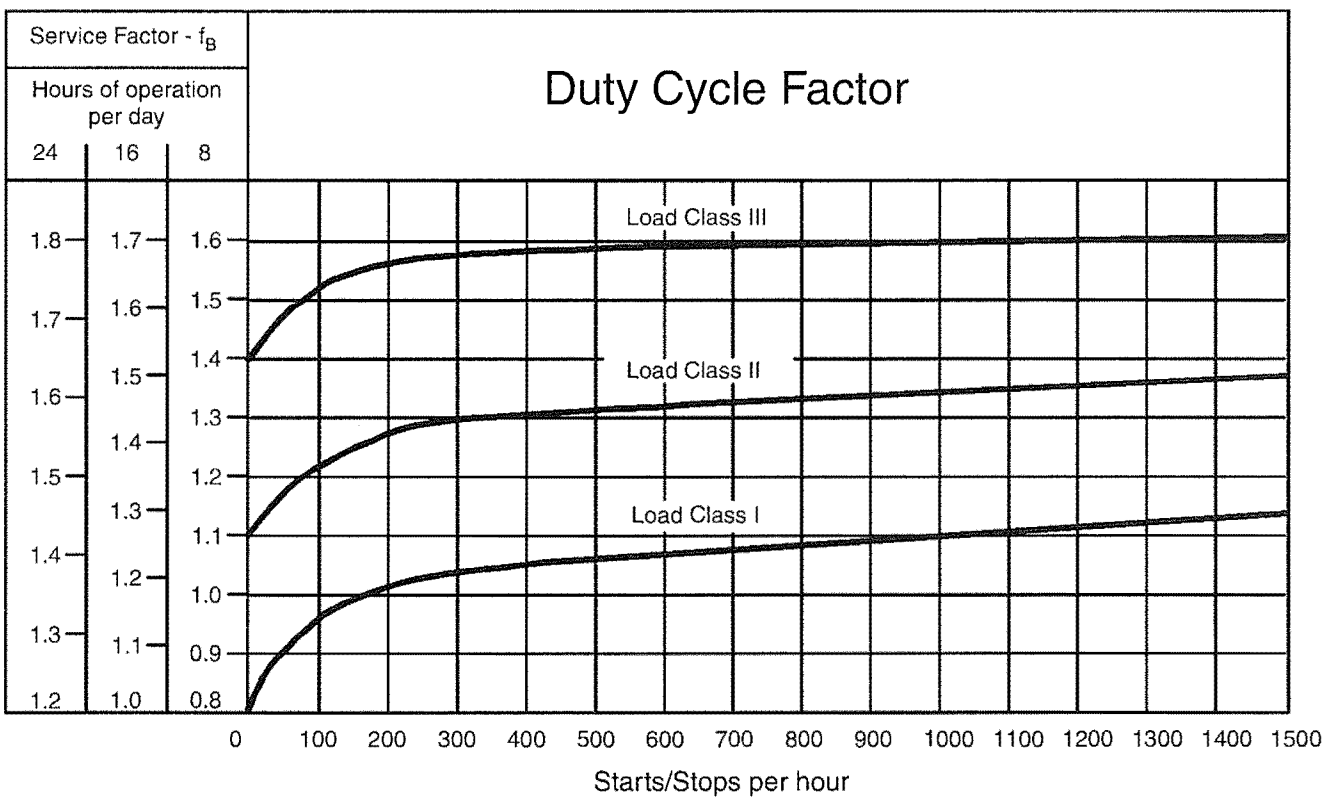

Service Factor for Increased Ambient Temperatures

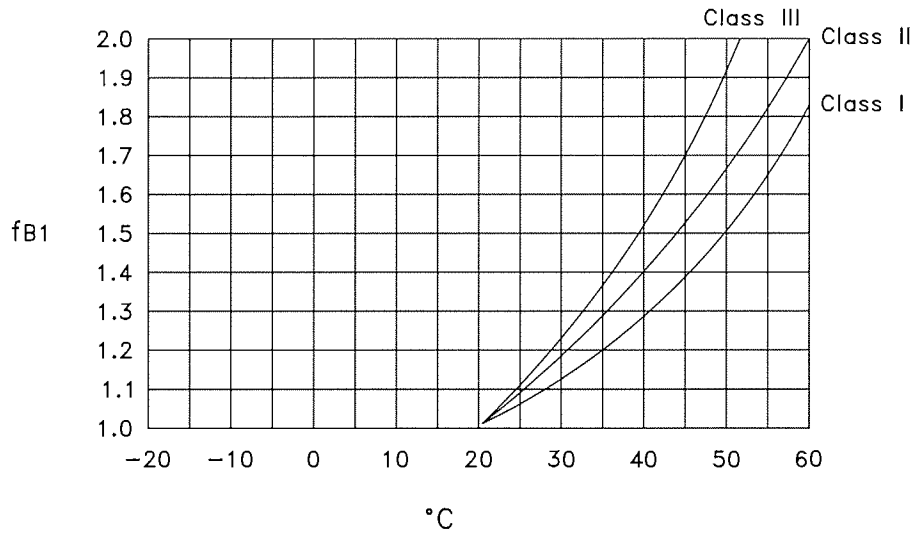

Service Factor for Intermittent Duty

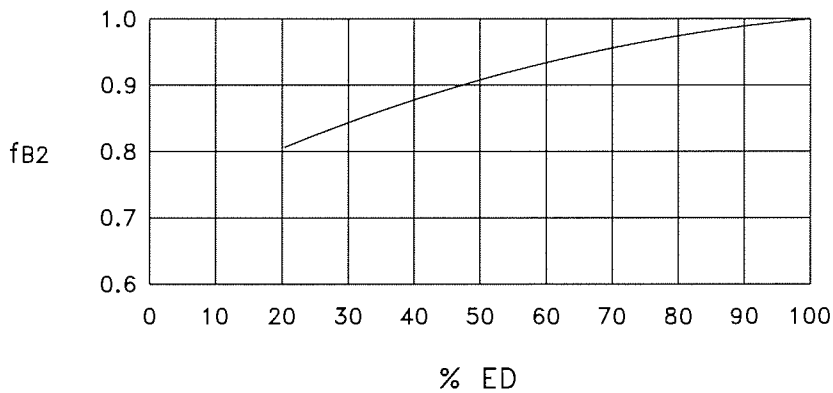

$$\%ED = \frac{\text{Running Time in Minutes}}{\text{60 Minutes}} \times 100$$

Overhung Loads, OHL, are a combination of live loads acting at right angles to the drive shaft caused by gears, sprockets, pulleys, couplings, etc., as well as dead loads applied directly on the shaft.

These overhung loads subject shaft bearings and shafts to stresses which, if exceeded, may cause premature failure of bearings and/or shaft breakage from bending fatigue.

Determination of Overhung Load - OHL

When determining the resulting overhung load, the type of transmission element mounted on the shaft end must be considered and a transmission element factor, f_z, must be included. The overhung load exerted on the output or input shafts can be calculated from the following formula. The resultant overhung load F must not exceed the permissible overhung load for the selected gear unit.

$$F = \frac{2T}{d_o} \cdot f_z$$

F = equivalent OHL in lbs.
T = load torque on the drive in lb-in.
d_o = pitch diameter of the gear, sprocket, or sheave in inches
f_z = transmission element factor

The transmission element factor, f_z, takes into account an additional radial force that is imposed on the shaft due to the type of transmission element: gear, chain sprocket, or sheave. There are gear teeth separating forces, pre-tensioning of belts, etc. that must be taken into account to determine the total equivalent radial loads. From applicational experience the following values of f_z should be used:

Transmission Element	Comments	f_z Factor
Spur or helical gears	≥ 17 teeth	1.0
	< 17 teeth	1.15
Chain sprockets	≥ 20 teeth	1.0
	< 20 teeth	1.25
	< 13 teeth	1.4
V-belt pulleys		1.75
Flat belt pulleys		2.5
Timing belt pulleys		1.3

Permissible Output Shaft Loads

The output shaft of the SEW-Eurodrive gear units are capable of accepting the axial and radial loads normally encountered by the mounting of gears, chain sprockets, belt pulleys, and shaft couplings. The permissible OHL under the most unfavorable conditions which can be applied at the midpoint of the shaft extensions for the gear unit types S and SF is shown in the respective speed/power selection tables as F_{Ra} in lbs. When the force is not applied at the midpoint of the shaft extension the F_{Ra} value must be adjusted according to the OHL conversion formulas.

It is possible in some instances for the OHL capacity to be substantially increased if the exact direction of the radial force is known. In such instances it is essential that full details be given to our engineering department to check the suitability of the unit selected.

For permissible axial and radial loads for gear unit types SA and SAF as well as for SF with output shaft projection opposite the flange and permissible axial loads for S and SF, please submit full details to our engineering department.

Output OHL Conversion

If the resultant OHL acts at a point other than at the midpoint of the output shaft extension, the permissible OHL, F_X, must be determined at the application point of the load according to the following formula:

F_{Ra}-(lb.) Permissible overhung load at the midpoint of the output shaft extension—see selection tables.
X-(in.) Distance from the shoulder on the output shaft to the application point of load.
F_X-(lb.) Permissible overhung load at the point X
a-(lb-in.) Gear unit constant - see chart for values.
b,c,d-(in.) Gear unit constant - see chart for values.

The permissible OHL is the smaller of the two values obtained from the following formulae, F_{XL} and F_{XW}, and is denoted as F_X. The permissible OHL, F_X, **must be** greater than the calculated equivalent overhung load, F.

$$\text{Permissible OHL, } F_{XL} = F_{Ra} \cdot \frac{c}{d + x} \text{ (lb)}$$

$$\text{Permissible OHL based on shaft stress, } F_{XW} = \frac{a \cdot 10^3}{b + x} \text{ (lb)}$$

Note: F_{XW} applies only when reducer torque, T_a, is maximum.

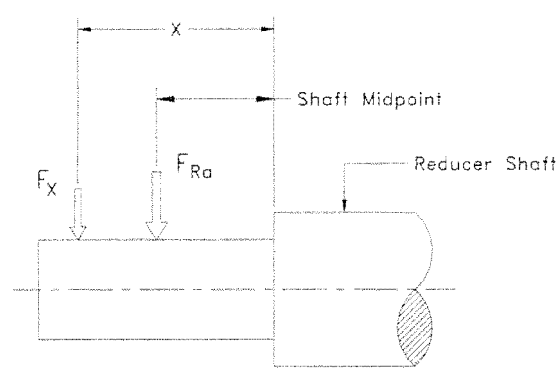

Frame Size	a lb-in.	b in.	c in.	d in.
S 37	0.53	0	4.67	3.88
S 47	1.18	0	5.12	4.13
S 57	1.89	0	5.91	4.72
S 67	2.69	0	7.24	5.87
S 77	4.66	0	8.82	7.05
S 87	14.87	0	11.08	8.72
S 97	22.48	0	12.85	10.09

MAX-E1™ NEMA PREMIUM EFFICIENCY

CC002A

TYPE AEHE, AEHH8N

Effective 08-01-06
Supercedes 08-22-05

APPLICATIONS:

- Fans & Blowers
- Pumps
- Crushers
- Compressor
- Mixers
- Conveyors
- Any Severe Duty / Petro-Chem / Pulp & Paper Application

FEATURES:

- 3/4 - 800 HP
- 3600, 1800, 1200, 900 RPM
- Totally Enclosed Fan Cooled (IP54 Rating)
- NEMA Premium Efficient Ratings From 1 - 500 HP, Denoted Catalog Number Prefix of "EP" - Note (1)
- Department of Energy Efficiency Certification # CC002A
- 36 Months Warranty from Date of Manufacture
- 3 Phase, 60 Hz , 230/460V (Usable on 208V) – 150 HP and Larger are 460V Only
- 575V Ratings Available, Denoted by a Catalog Number Suffix of "5" - Note (2)
- 1.15 Service Factor – Continuous
- NEMA Design B Torques as a Minimum
- Class B Temperature Rise, Class F Insulation with Phenolic Alkyd Resin Varnish – 2 Dips and Bakes
- Oversized Main Conduit Box Rotatable in 90 Degree Increments – Fully Gasketed with NPT Threaded Entrance – F1 Mounted. F2 Available – See EXTRAS / OPTIONS Below
- Designed for 40˚C Ambient Temperature and Designed for 3300 ft. Elevation - Note (3)
- CSA Certified for Class I, Division II, Groups B, C, D, Temp Code T3C, Non Sparking, Non Static Fan - Note (4)
- Bi-Directional Rotation Except 2 Pole Motors 5000 Frame and Larger which are Unidirectional CCW Facing the Drive-End. See EXTRAS / OPTIONS Below if CW Rotation is Required.
- Cast Iron Frame, End Bells, Fan Cover, and Main Conduit Box
- Dual Drilled Feet – Longer Frames. (i.e. 145T Drilled Also for 143T) Through 449T Frames Only
- 1045 Carbon Steel Shaft
- Aluminum Die Cast Squirrel Cage Rotor Construction for Frames 5011 and Smaller. Copper / Copper Alloy Rotor for Frames 5800-6800.
- Paint System: Phenolic Rust Proof Base Plus Polyurethane Top Coat
- Paint Color: Light Grey – Munsell N5.0
- Vacuum De-Gassed Regreasable Ball Bearings (or Roller) Using Polyrex EM Grease
- Automatic Grease Discharge Fittings
- Labyrinth Type Metal Flinger on Both Ends for Frames 280TS to 6800
- Rubber Flinger on Drive-End for Frames 140T to 280T
- Cast Iron Inner and Outer Bearing Caps on Both Ends for Frames 280TS to 6800
- Grounding Terminal Inside Main Box
- Stainless Steel Nameplate
- UL Recognized and CSA Approved for Inverter Duty per NEMA MG 1, Part 31 – 300 HP and Below. 350 HP and Above are Suitable for Inverter Duty per NEMA MG 1, Part 31, 4.4.2 - Note (5)
- HPE Stator Wire Capable of Withstanding Voltage Spikes of Up to 2200 Volts
- Speed Ranges: 20:1 VT, 10:1 CT
- 9 Leads -5 HP and Below, 12 Leads - 7.5 HP to 125 HP, 6 Leads - 150 HP and Larger

EXTRAS / OPTIONS:

Please refer to pages 62 - 66 of the TWMC Stock Motors Price Book.

Notes:

(1) NEMA Premium Efficiency levels only applies to 1-500 HP, 3600, 1800, 1200 RPM.
(2) TWMC carries minimal 575V stock. Please check availability to ensure required motors are in stock. Ratings may be available from our Canadian warehouses at a higher price, or from our factory with longer lead time.
(3) Please consult factory for suitability in higher ambients and higher elevations.
(4) Additional charge for Division II nameplate.
(5) Motor service factor is 1.0 when operated on a VFD.

DATE Sept. 25, 2006	OUTLINE DIMENSIONS	MOTOR TYPE: AEHH8N-CF
Cat. #: EP0034C	3-PHASE INDUCTION MOTOR	FRAME NO. 182TC

Pole	HP	kW	Hz	VOLT	Syn. Speed r/min(rpm)
4	3	2.24	60	230/460	1800

Ins	Rating	Dimension in	Approx Weight	Bearings
F	CONT.	inches	100 lbs	DE: 6306ZZ NDE: 6306ZZ

Totally Enclosed Fan-Cooled Type. Squirrel-Cage Rotor.

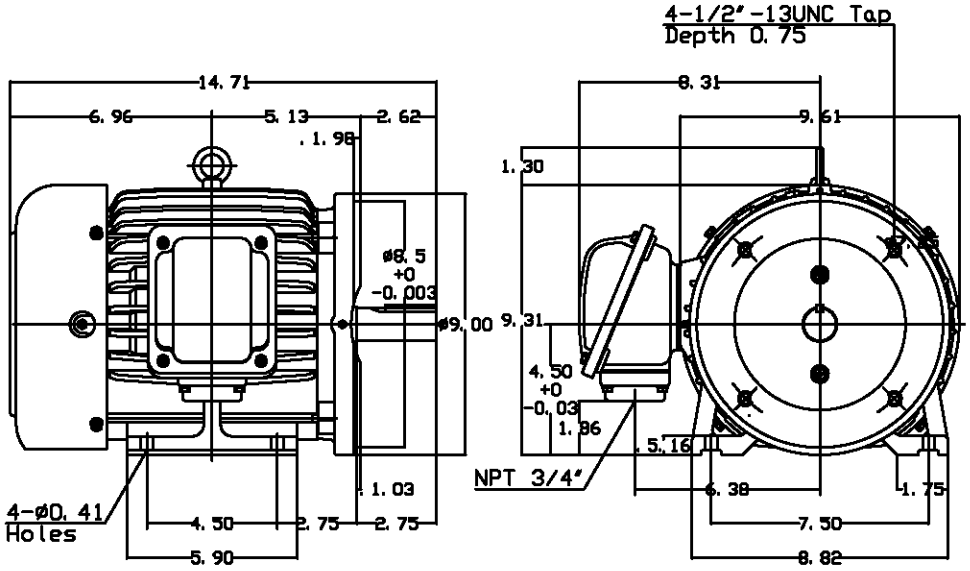

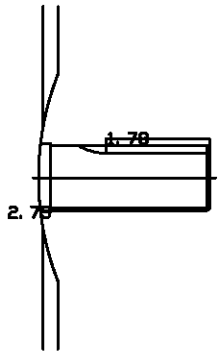

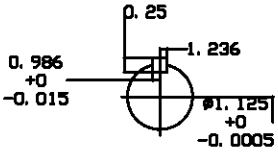

DWN.	F. C. HWU	07-22-97	TECO Westinghouse	DWG NO. 31049J807060
CHKD.	C. S. LO	07-23-97		
APPD.	Y. B. HUANG	07-23-97		

TECO Westinghouse

ISSUED	PERFORMANCE DATA	ENCLOSURE
9/13/2006		TEFC
TYPE	3-PHASE INDUCTION MOTOR	CATALOG#
AEHH8NCF		EP0034C

NAMEPLATE INFORMATION

OUTPUT HP	OUTPUT KW	POLE	FRAME SIZE	VOLTAGE	HZ	RATED AMBIENT	INS. CLASS	NEMA DESIGN	TIME RATING	SERVICE FACTOR
3	2.24	4	182TC	230/460	60	40°C	F	B	CONT.	1.15

VARIABLE FREQUENCY DRIVE SERVICE

VARIABLE TORQUE			
HZ	HP	RPM	TORQUE (lb-ft)
3~60	0.0004~3	90~1800	0.023~8.975

OHMS/PHASE EQUIVALENT WYE CIRCUIT (AT RATED OPERATING TEMPERATURE 25°C)				
R1	R2	X1	X2	X_m
1.8318	2.0549	5.849	7.1997	158.39

CONSTANT TORQUE				CONSTANT HORSEPOWER			
HZ	HP	RPM	TORQUE (lb-ft)	HZ	HP	RPM	TORQUE (lb-ft)
6~60	.3~3	180~1800	8.975	60~120	3	1800~3600	8.975~4.488

TYPICAL PERFORMANCE

FULL LOAD RPM	EFFICIENCY				POWER FACTOR			SOUND PRESSURE LEVEL @ 3 FT Db(A)
	FULL LOAD		3/4 LOAD %	1/2 LOAD %	FULL LOAD %	3/4 LOAD %	1/2 LOAD %	
	MIN.%	NOM.%						
1755	87.5	89.5	89.5	87.5	84	79.5	68.5	52

CURRENTS									NEMA KVA CODE LETTER	SAFE STALL TIME IN SECONDS	
NO LOAD			FULL LOAD			LOCKED ROTOR					
AT 208 VOLT	AT 230 VOLT	AT 460 VOLT	AT 208 VOLT	AT 230 VOLT	AT 460 VOLT	AT 208 VOLT	AT 230 VOLT	AT 460 VOLT		COLD	HOT
3.09	2.80	1.4	8.27	7.48	3.74	70.0	64.0	32	K	54	38

TORQUE				INERTIA			ACCEL TIME (DOL)		ALLOWABLE STARTS PER HOUR	
FULL LOAD (lb-ft)	LOCKED ROTOR %FLT	PULL UP %FLT	BREAK DOWN %FLT	ROTOR WR^2 ($lb\text{-}ft^2$)	NEMA LOAD WK^2 ($lb\text{-}ft^2$)	MAX ALLOWABLE WK^2 ($lb\text{-}ft^2$)	NEMA LOAD WK^2 Sec	MAX ALLOWABLE WR^2 Sec	COLD	HOT
8.98	225	175	345	0.404	17	74	4.18	11.45	2	1

APPROVED:	M. PRATER	DRAWING NO.	31057EP0034C	REVISION:	0

DATE: September 13, 2006	CONNECTION DIAGRAM	CATALOG NO.: EP0034C

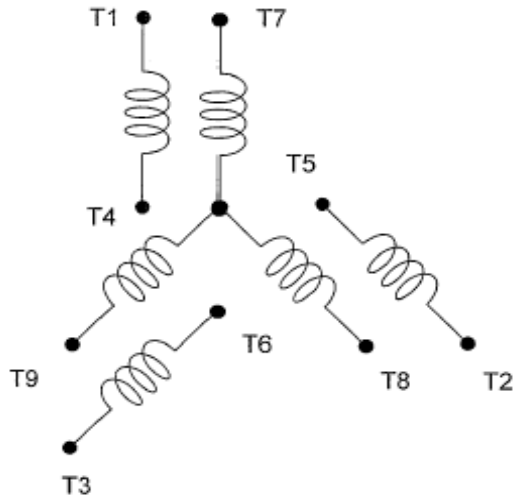

SCHEMATIC - 2Y/Y CONNECTION

ACROSS THE LINE CONNECTION

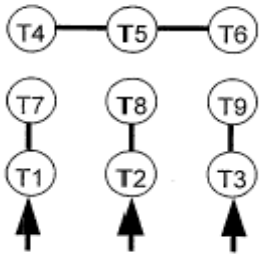	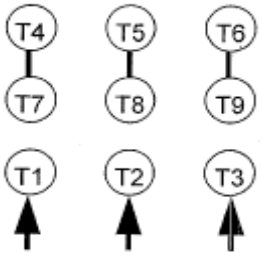
LINE **230 VOLT CONNECTION**	**LINE** **460 VOLT CONNECTION**

TECO Westinghouse	DWG NO. **DAC-1566-2**

OPERATION & MAINTENANCE

WENATCHEE WWTP IMPROVEMENTS
PROJECT PO913
WENATCHEE, WA

SECTION 11092 – PERFORATED PLATE SCREENS
SECTION 11095 – SCREENINGS WASHER COMPACTOR

GEAR REDUCER DETAILS – BRUSH DRIVE

Manufacturer:	SEW Eurodrive
Model no.:	SA67
Type:	Helical gear reducer
Ratio:	12.96:1
AGMA nameplate:	II
Output Rpm:	129
Weight:	117 lbs.
Motor Mounting:	AM 145 Adaptor

MOTOR DETAILS – BRUSH DRIVE

Manufacturer:	Teco Westinghouse
Model No.:	EP0024C
Hp:	2 HP
Voltage:	230-460/3Ph/60Hz
Full Load Amperage:	2.78A @ 460 V
Type:	TEFC, Premium Efficiency, Class I, Div II
RPM:	1800
NEMA Design:	C
Insulation:	F
Weight:	65 lbs.
Service Factor:	1.15
Mounting:	145TC

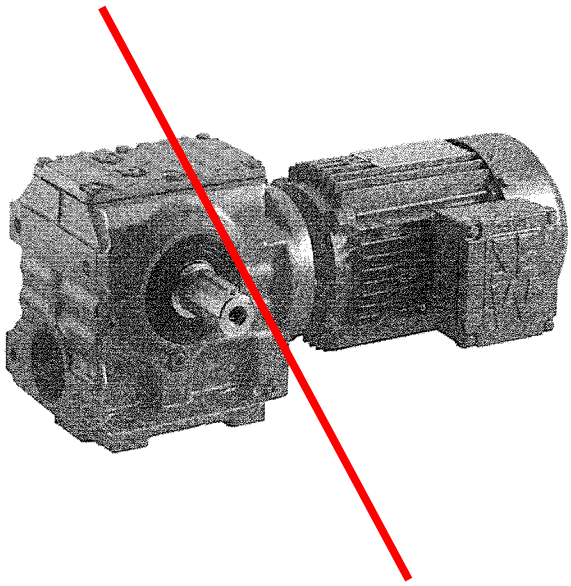

S..DT..DV..

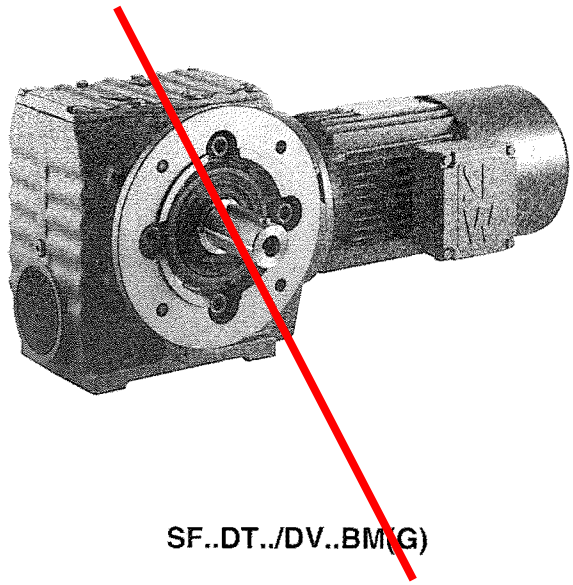

SF..DT../DV..BM(G)

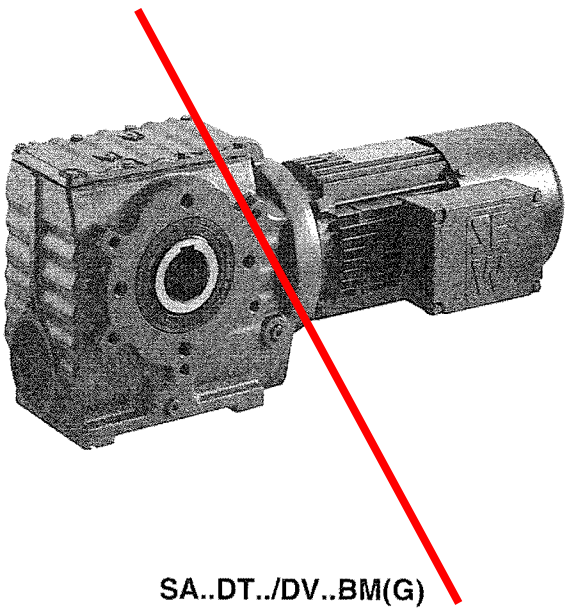

SA..DT../DV..BM(G)

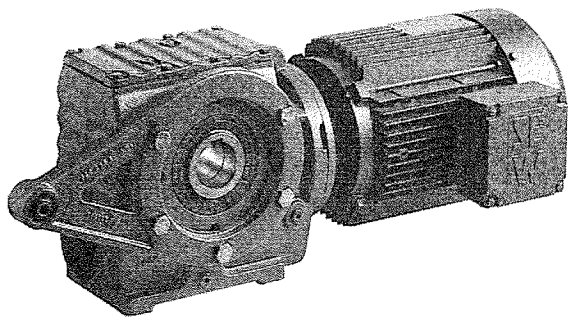

SA..TDT../DV..

	S67					AM56			AM143			AM145		
Ratio i	Output Speed n_a rpm	Input Power P_{emax} HP	Output Torque T_{amax} lb-in	Stages Pri.	Stages Sec.	Input Power P_e HP	Output Torque T_a lb-in	Output OHL F_{Ra} lb	Input Power P_e HP	Output Torque T_a lb-in	Output OHL F_{Ra} lb	Input Power P_e HP	Output Torque T_a lb-in	Output OHL F_{Ra} lb
217.41	8.10	0.98	4600	2	-	0.75	3410	2180	0.98	4600	1950	-	-	-
190.11	9.20	1.10	4600	2	-	0.75	3010	2240	1	4120	2050	1.10	4600	1950
180.60	9.70	1.16	4600	2	-	0.75	2830	2250	1	3940	2090	1.16	4600	1950
158.45	11	1.30	4600	2	-	0.75	2520	2300	1	3450	2170	1.30	4600	1950
134.40	13	1.46	4600	2	-	0.75	2120	2340	1	2960	2240	1.46	4600	1950
121.33	14	1.60	4600	2	-	0.75	1900	2340	1	2660	2270	1.60	4600	1950
106.75	16	1.86	4600	2	-	0.75	1660	2360	1	2350	2320	1.86	4600	1950
100.80	17	2.00	4600	2	-	0.75	1570	2390	1	2210	2320	2	4600	1950
85.83	20	2.26	4600	2	-	0.75	1320	2390	1	1860	2360	2	4030	2070
78.00	22	2.39	4510	2	-	-	-	-	-	-	-	2	3670	2140
75.06	23	2.00	4250	2	-	0.75	1500	2390	1	2040	2340	-	-	-
65.63	27	2.26	4250	2	-	0.75	1310	2360	1	1810	2300	2	3720	2000
62.35	28	2.39	4250	2	-	0.75	1240	2340	1	1700	2270	2	3540	1980
54.70	32	2.66	4250	2	-	0.75	1060	2250	1	1490	2200	2	3100	1940
46.40	38	3.19	4250	2	-	0.75	900	2160	1	1260	2100	2	2660	1890
41.89	42	3.46	4250	2	-	0.75	810	2090	1	1130	2050	2	2390	1850
36.85	47	3.99	4250	2	-	0.75	700	2020	1	980	1980	2	2080	1800
34.80	50	4.12	4250	2	-	0.75	665	1990	1	930	1940	2	1990	1780
29.63	59	4.79	4250	2	-	0.75	550	1890	1	780	1860	2	1680	1720
26.93	65	5.05	4030	2	-	-	-	-	1	710	1810	2	1520	1680
24.44	72	3.[illegible]	3010	2	-	0.75	540	1740	1	735	1700	2	1520	1530
23.22	75	4.12	3010	2	-	0.75	505	1720	1	700	1680	2	1440	1520
20.37	[illegible]	4.66	3010	2	-	0.75	445	1650	1	610	1620	2	1270	1480
17.28	101	5.45	3010	2	-	0.75	370	1580	1	515	1550	2	1070	1430
15.60	112	5.99	3010	2	-	0.75	325	1530	1	460	1500	2	960	1400
13.73	128	6.78	3010	2	-	0.75	285	1470	1	400	1450	2	850	1350
12.96	135	7.18	3010	2	-	0.75	265	1450	1	370	1420	2	795	1330
11.03	159	8.38	3010	2	-	0.75	220	1380	1	320	1360	2	680	1280
10.03	175	8.51	2790	2	-	-	-	-	1	285	1320	2	610	1250
8.69	201	8.78	2480	2	-	-	-	-	1	240	1260	2	530	1200
7.56	231	9.04	2210	2	-	-	-	-	-	-	-	2	460	1160

	S67					AM182			AM184			AM213			AM215		
Ratio i	Output Speed n_a rpm	Input Power P_{emax} HP	Output Torque T_{amax} lb-in	Stages Pri.	Stages Sec.	Input Power P_e HP	Output Torque T_a lb-in	Output OHL F_{Ra} lb	Input Power P_e HP	Output Torque T_a lb-in	Output OHL F_{Ra} lb	Input Power P_e HP	Output Torque T_a lb-in	Output OHL F_{Ra} lb	Input Power P_e HP	Output Torque T_a lb-in	Output OHL F_{Ra} lb
158.45	11	1.30	4600	2	-	1.30	4600	1950	-	-	-	-	-	-	-	-	-
134.40	13	1.46	4600	2	-	1.46	4600	1950	1.46	4600	1950	-	-	-	-	-	-
121.33	14	1.60	4600	2	-	1.60	4600	1950	1.60	4600	1950	-	-	-	-	-	-
106.75	16	1.86	4600	2	-	1.86	4600	1950	1.86	4600	1950	1.86	4600	1950	1.86	4600	1950
100.80	17	2.00	4600	2	-	2.00	4600	1950	2.00	4600	1950	2.00	4600	1950	2.00	4600	1950
85.83	20	2.26	4600	2	-	2.26	4600	1950	2.26	4600	1950	2.26	4600	1950	2.26	4600	1950
78.00	22	2.39	4510	2	-	2.39	4510	1970	2.39	4510	1970	2.39	4510	1970	2.39	4510	1970
67.57	26	2.66	4380	2	-	2.66	4380	2000	2.66	4380	2000	2.66	4380	2000	2.66	4380	2000
58.80	30	2.79	4070	2	-	-	-	-	2.79	4070	1930	2.79	4070	1930	2.79	4070	1930
54.70	32	2.66	4250	2	-	2.66	4250	1760	-	-	-	-	-	-	-	-	-
46.40	38	3.19	4250	2	-	3	3940	1690	3.19	4250	1640	-	-	-	-	-	-
41.89	42	3.46	4250	2	-	3	3540	1670	3.46	4250	1560	-	-	-	-	-	-
36.85	47	3.99	4250	2	-	3	3140	1630	3.99	4250	1470	3.99	4250	1470	3.99	4250	1470
34.80	50	4.12	4250	2	-	3	2960	1630	4.12	4250	1430	4.12	4250	1430	4.12	4250	1430
29.63	59	4.79	4250	2	-	3	2520	1590	4.79	4250	1320	4.79	4250	1320	4.79	4250	1320
26.93	65	5.05	4030	2	-	3	2300	1560	5	3940	1310	5.05	4030	1290	5.05	4030	1290
23.33	75	5.19	3580	2	-	3	1990	1520	5	3410	1300	5.19	3580	1270	5.19	3580	1270
20.37	86	4.66	3010	2	-	3	1900	1350	-	-	-	-	-	-	-	-	-
20.30	86	5.32	3190	-	-	-	-	-	5	2960	1280	5.32	3190	1250	5.32	3190	1250
17.28	101	5.45	3010	2	-	3	1600	1320	5	2740	1080	-	-	-	-	-	-
15.60	112	5.99	3010	2	-	3	1440	1290	5	2480	1080	-	-	-	-	-	-
13.73	128	6.78	3010	2	-	3	1270	1260	5	2170	1080	6.78	3010	820	6.78	3010	820
12.96	135	7.18	3010	2	-	3	1190	1250	5	2040	1070	7.18	3010	770	7.18	3010	770
11.03	159	8.38	3010	2	-	3	1020	1210	5	1740	1060	7.50	2660	820	8.38	3010	635
10.03	175	8.51	2790	2	-	3	920	1190	5	1580	1050	7.50	2430	870	8.51	2790	675
8.69	201	8.78	2480	2	-	3	795	1150	5	1370	1030	7.50	2080	880	8.78	2480	730
7.56	231	9.04	2210	2	-	3	690	1110	5	1190	1010	7.50	1810	870	9.04	2210	775

Please consult your SEW-Eurodrive Assembly Center for additional speed (RPM) selections and dimension pages not listed.

AM56-145

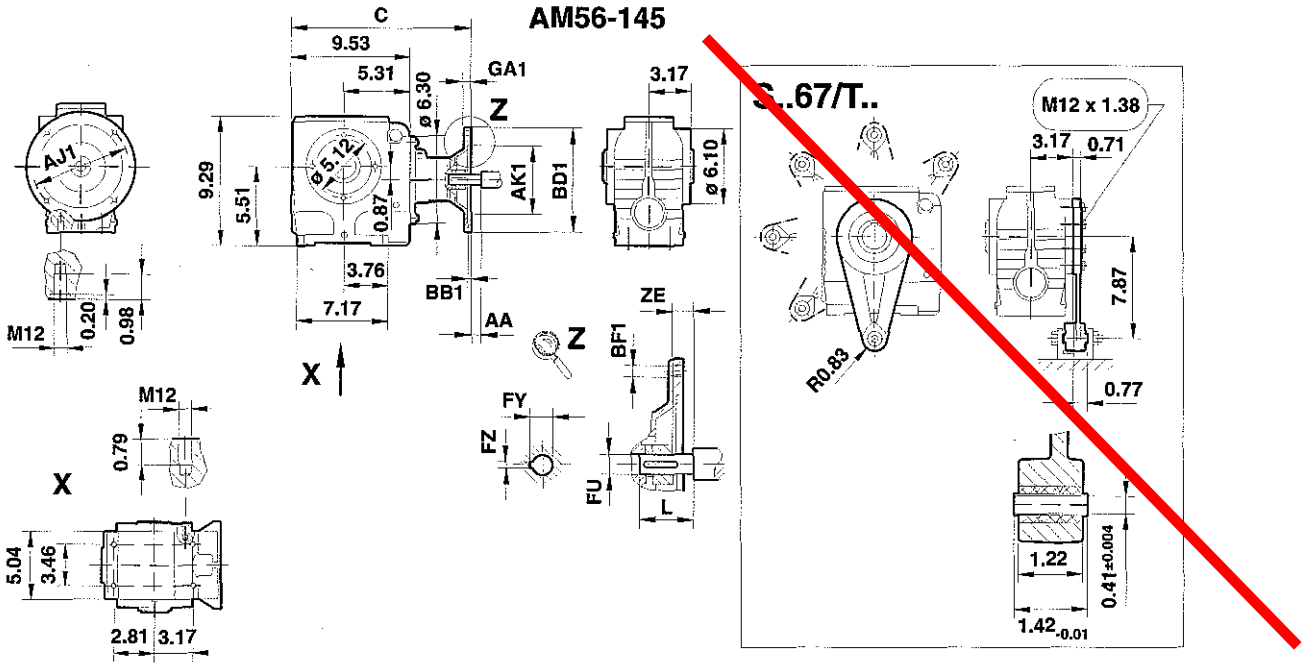

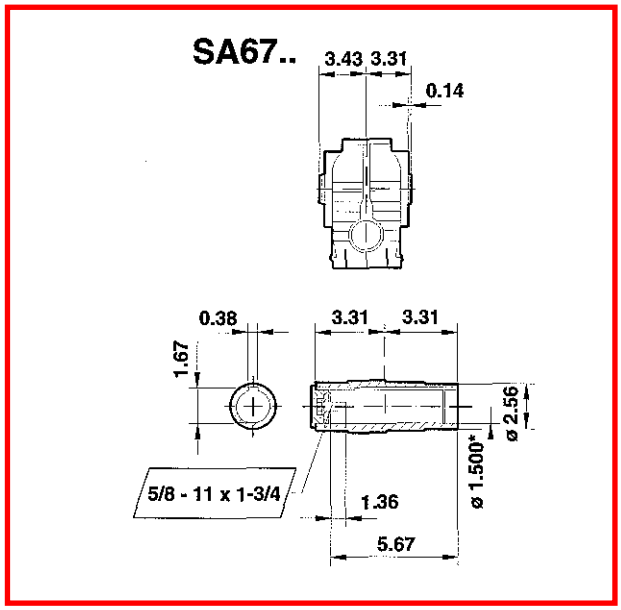

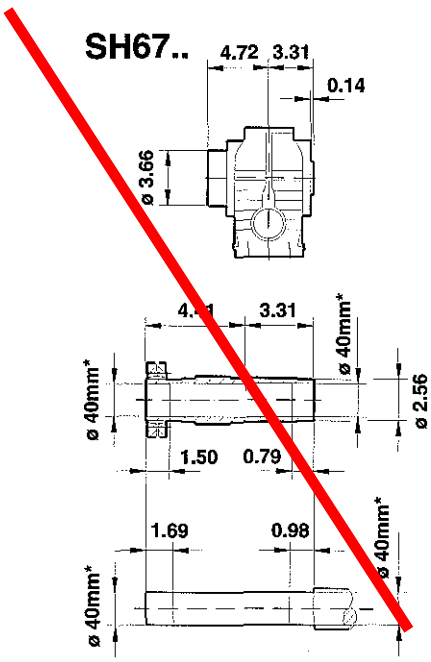

		AK1	GA1	AJ1	BB1	BD1	C	AA	BF1	ZC	ZE	FU	L	FY	FZ
SA67 SH67	AM56	4.50	0.43	5.875	0.18	6.69	12.96	-0.19	0.41	3.43	0.65	0.625	1.85	0.71	0.188
	AM143	[illegible]	[illegible]	[illegible]	[illegible]	[illegible]	[illegible]	[illegible]	[illegible]	[illegible]	[illegible]	[illegible]	[illegible]	[illegible]	[illegible]
	AM145	4.50	0.47	5.875	0.18	6.69	13.88	0.12	0.41	4.35	0.57	0.875	2.24	0.98	0.188

*Refer to page 101 for tolerance information
Dimensions subject to change without notice

Refer to page 94 for Alternate Shafts
See page 99 for Compound Reducer Information

SA/SH47-97

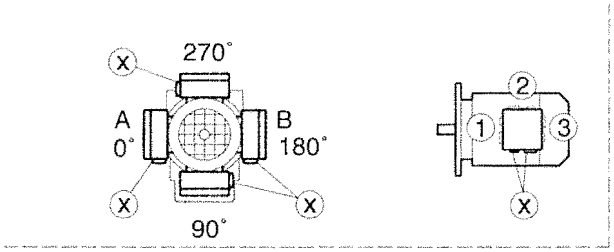

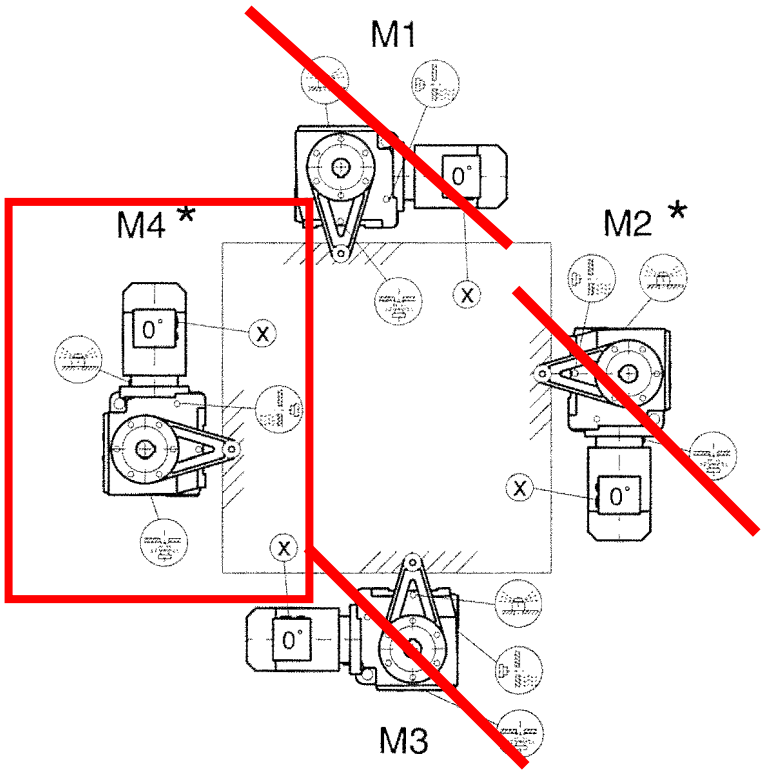

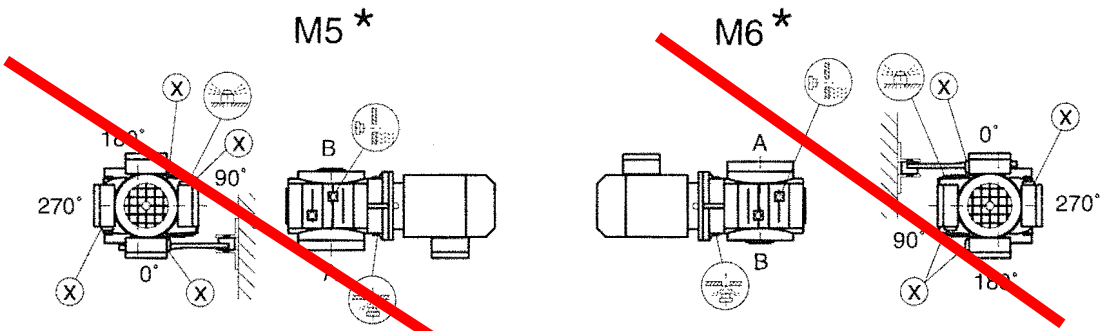

* → page 11

The approximate lubricant in US **gallons and liters** per mounting position is as follows:

Gear Unit	Mounting Position											
	M1		M2		M3 [1]		M4		M5		M6	
	Gallons	Liters	Gallons	Liters	Gallons	Liters	Gallons	Liters	Gallons	Liters	Gallons	Liters
S37	0.07	0.25	0.11	0.4	0.13	0.5	0.16	0.6	0.11	0.4	0.11	0.4
S47	0.09	0.35	0.21	0.8	0.18 (0.24)	0.7 (0.9)	0.29	1.1	0.21	0.8	0.21	0.8
S57	0.13	0.5	0.32	1.2	0.26 (0.32)	1 (1.2)	0.40	1.5	0.34	1.3	0.34	1.3
S67	0.26	1	0.53	2	0.58 (0.82)	2.2 (3.1)	0.85	3.2	0.69	2.6	0.69	2.6
S77	0.50	1.9	1.11	4.2	0.98 (1.43)	3.7 (5.4)	1.59	6	1.16	4.4	1.16	4.4
S87	0.87	3.3	2.14	8.1	1.82 (2.75)	6.9 (10.4)	3.17	12	2.22	8.4	2.22	8.4
S97	1.80	6.8	3.96	15	3.54 (4.76)	13.4 (18)	5.94	22.5	4.49	17	4.49	17
SF37	0.07	0.25	0.11	0.4	0.13	0.5	0.16	0.6	0.11	0.4	0.11	0.4
SF47	0.11	0.4	0.24	0.9	0.24 (0.29)	0.9 (1.1)	0.32	1.2	0.26	1	0.26	1
SF57	0.13	0.5	0.32	1.2	0.26 (0.40)	1 (1.5)	0.42	1.6	0.37	1.4	0.37	1.4
SF67	0.26	1	0.58	2.2	0.61 (0.79)	2.3 (3)	0.85	3.2	0.71	2.7	0.71	2.7
SF77	0.50	1.9	1.08	4.1	1.03 (1.53)	3.9 (5.8)	1.72	6.5	1.29	4.9	1.29	4.9
SF87	1.00	3.8	2.11	8	1.88 (2.67)	7.1 (10.1)	3.17	12	2.40	9.1	2.40	9.1
SF97	1.96	7.4	3.96	15	3.65 (4.97)	13.8 (18.8)	6.24	23.6	4.76	18	4.76	18
SA/SH37 SAF/SHF37 SAZ/SHZ37	0.07	0.25	0.11	0.4	0.13	0.5	0.16	0.6	0.11	0.4	0.11	0.4
SA/SH47 SAF/SHF47 SAZ/SHZ47	0.11	0.4	0.21	0.8	0.18 (0.24)	0.7 (0.9)	0.29 [2]	1.1 [2]	0.21	0.8	0.21	0.8
SA/SH57 SAF/SHF57 SAZ/SHZ57	0.13	0.5	0.29	1.1	0.26 (0.40)	1 (1.5)	0.42	1.6	0.32	1.2	0.32	1.2
SA/SH67 SAF/SHF67 SAZ/SHZ67	0.26	1	0.53	2	0.48 (0.69)	1.8 (2.6)	0.77	2.9	0.66	2.5	0.66	2.5
SA/SH77 SAF/SHF77 SAZ/SHZ77	0.48	1.8	1.03	3.9	0.95 (1.32)	3.6 (5)	1.56	5.9	1.19	4.5	1.19	4.5
SA/SH87 SAF/SHF87 SAZ/SHZ87	1.00	3.8	1.96	7.4	1.59 (2.30)	[illegible] (8.7)	[illegible]	11.2	2.11	8	2.11	8
SA/SH97 SAF/SHF97 SAZ/SHZ97	1.85	7	3.70	14	3.01 (4.23)	11.4 (16)	5.55	21	4.15	15.7	4.15	[illegible]

[1] On compound gear units the primary (larger) gear unit is provided with the oil quantity in parenthesis.

[2] When combined with a 2-pole motor at M4 mounting position, the oil quantity must be reduced to 0.28 gallons (1.05 liters).

For compound drives the R reducer requires its own oil filling as shown in the chart:

Gear Unit	Mounting Position					
	M1/M3/M5/M6		M2		M4	
	Gallons	Liters	Gallons	Liters	Gallons	Liters
R17	0.07	0.25	0.16	0.6	0.16	0.6
R37	0.11	0.4	0.24	0.9	0.29	1.1
R57	0.21	0.8	0.48	1.8	0.53	2

Lubricant table

	6) °C -50 0 +50 +100	DIN (ISO)	ISO, NLGI	Mobil®	Shell	Klüber	ARAL	BP	Tribol	TEXACO	Optimol	FUCHS
R... K...(HK...)	Standard -10 +40	CLP(CC)	VG 220	Mobilgear 630	Shell Omala 220	Klüberoil GEM 1-220	Aral Degol BG 220	BP Energol GR-XP220	Tribol 1100/220	Meropa 220	Optigear BM 220	Renolin CLP220
	-25 +80	CLPPG	VG 220	Mobil Glygolyle 30	Shell Tivela WB	Klübersynth GH 6-220	Aral Degol GS 220	BP Enersyn SG-XP220	Tribol 800/220	Synlube CLP220	Optiflex A 220	
	4) -40 +80	CLPHC	VG 220	Mobil SHC 630	Shell Omala 220 HD	Klübersynth EG 4-220	Aral Degol PAS 220		Tribol 1510/220	Pinnacle EP220	Optigear Synthetic A 220	Renolin Unisyn CLP220
	4) -40 +40		VG 150	Mobil SHC 629		Klübersynth EG 4-150				Pinnacle EP150		
F...	-20 +25	CLP(CC)	VG 150 VG 100	Mobilgear 627	Shell Omala 100	Klüberoil GEM 1-15[illegible]	Aral Degol BG 100	BP Energol GR-XP100	Tribol 1100/100	Meropa 150	Optigear BM 100	Renolin CLP150
	-30 +10	HLP(HM)	VG 68-46 VG 32	Mobil D.T.E. 13M	Shell Tellus T 32	Klüberoil GEM 1-68	Aral Degol BG 46		Tribol 1100/68	Rando EP Ashless 46	Optigear 32	Renolin B 46 HVI
	4) -40 +10	CLPHC	VG 32	Mobil SHC 624		Klüber-Summit HySyn FG-32				Cetus PAO [illegible]		
	4) -40 -20	HLP(HM)	VG 22 VG 15	Mobil D.T.E. HM	Shell Tellus T 15	Isoflex MT 30 ROT		BP Energol HLP-HM 10		Rando HDZ 15		
S...(HS...)	Standard 0 +40	CLP(CC)	VG 680	Mobilgear 636	Shell Omala 680	Klüberoil GEM 1-680	Aral Degol BG 680	BP Energol GR-XP680	Tribol 1100/680	Meropa 680	Optigear BM 680	Renolin CLP680
	-20 +60	CLPPG	VG 680 1)	Mobil Glygoyle HE 680		Klübersynth GH 6-680		BP Enersyn SG-XP680	Tribol 800/680	Synlube CLP680		
	4) -30 +80	CLPHC	VG 460	Mobil SHC 634	Shell Omala 460 HD	Klübersynth EG 4-460				Pinnacle EP460		
	4) -40 +10		VG 150	Mobil SHC 629		Klübersynth EG 4-150				Pinnacle EP150		
	-20 +10	CLP(CC) HLP(HM)	VG 150 VG 100	Mobilgear 627	Shell Omala 100	Klüberoil GEM 1-150	Aral Degol BG 100	BP Energol GR-XP100	Tribol 1100/100	Meropa 100	Optigear BM 100	Renolin CLP150
	-25 +20	CLPPG	VG 220 1)	Mobil Glygoyle 30		Klübersynth GH 6-220			Tribol 800/220	Synlube CLP220	Optiflex A 220	
	4) -40 0	CLPHC	VG 32	Mobil SHC 624		Klüber-Summit HySyn FG-32				Cetus PAO 46		
R..., K...(HK...) F..., S...(HS...)	4) -30 +40	HCE 7)	VG 460		Shell Cassida Fluid GL460	Klüberoil 4UH1-460	Aral Eural Gear 460				Optileb GT 460	
	-20 [illegible]	E 8)	VG 460			Klüberbio CA2-460	Aral Degol BAB 460				Optisynt BS 460	
W...(HW...)	Standard -20 +40	SEW PG	VG 460 2)			Klüber SEW HT-460-5						
	4) -40 +10	API GL5	SAE 75W90 (~VG 100)	Mobilube SHC 75 W90-LS								
	-20 +40	CLPPG 7)	VG 460 3)			Klübersynth UH1 6-460						
R32 R302	-25 +60	DIN 51 818 5)	00	Glygoyle Grease 00	Shell Tivela Compound A	Klübersynth GE 46-1200				Multifak 68[illegible]		
	Standard -15 +40		000 - 0	Mobilux EP004	Shell Alvania GL00		Aralub MFL00	BP Energrease LS-EP00		Multifak EP000	Longtime PD 00	Renolin SF [illegible]

The lubricant table above shows the permitted lubricants for SEW gear units. Please note the following key to the lubricant table.

Key to the lubricant table

CLP	= Mineral oil
CLP PG	= Polyglycol (W gear units, conforms to USDA-H1)
CLP HC	= Synthetic hydrocarbons
E	= Ester oil (water pollution danger category WGK 1)
HCE	= Synthetic hydrocarbons + ester oil (USDA - H1 certification)
HLP	= Hydraulic oil
	= Synthetic lubricant (= synthetic-based anti-friction bearing grease)
	= Mineral lubricant (= mineral-based anti-friction bearing grease)

1) Helical-worm gear units with PG oil: Please contact SEW
2) Special lubricant for Spiroplan® gear units only
3) Recommendation: Select SEW $f_B \geq 1.2$
4) Note critical starting behavior at low temperatures!
5) Low-viscosity grease
6) Ambient temperature
7) Lubricant for the food processing industry
8) Biodegradable oil (lubricant for use in agriculture, forestry and water resources)

8. Design and Operating Notes

8.1. Lubricants

General Information

Unless a special arrangement is made, SEW supplies the drives with a lubricant fill specifically for the gear unit and mounting position. The decisive factor is the mounting position (M1 – M6, Refer to "Mounting Positions" on page 52) specified when ordering the drive. You must adapt the lubricant fill to any subsequent changes made to the mounting position. Refer to Lubricant fill quantities on page 78.

Anti-friction bearing greases

The anti-friction bearings in SEW gear units are given a factory-fill with the greases listed in the following table. SEW recommends regreasing anti-friction bearings with a grease fill at the same time as changing the oil.

	Ambient temperature	Manufacturer	Type
Anti-friction bearing in gear unit	-30 °C – +60 °C	Mobil	Mobilux EP 2
	-40 °C – +80 °C	Mobil	Mobiltemp SHC 100
Special greases for anti-friction bearings in gear units:			
Biodegradable oil	-30 °C – +40 °C	Aral	Aral Eural Grease EP 2
Lubricant for Food Processing Industry	-20 °C – +40 °C	Klüber	Klüberbio M32-82

The following grease quantities are required:

- For fast-running bearings (motor and gear unit input end): Fill the cavities between the roll barrels one third full with grease.
- For slow-running bearings (in gear units and gear unit output end): Fill the cavities between the roll barrels two thirds full with grease.

Introduction

The SEW-Eurodrive Helical-Worm Gear Units are designed for continuous duty under difficult operating conditions. Only materials of the highest quality are used in the manufacture of the units. These units have the following standard construction features:

- Gearcase and flanges of high strength gray cast iron SAE Class 30.
- Double seals on output shafts with additional inner seal made of Viton®.
- Captured keys on input and output shafts.
- Foot mounted, flange mounted, flange mounted with hollowshaft, or shaft mounted.

Efficiency

The efficiency of the gear units is mostly determined by the gearing and bearing friction, and ranges up to approximately 92%. However, due to the sliding friction of the worm gearing, the actual efficiency depends upon the gear ratio of the worm stage and the input speed.

Please see the tables in the current Speed Reducer Catalog for efficiencies by ratio and input speed.

The helical-worm gear units have an input helical gear stage which reduces the ratio of the worm gear stage and as a result improves the overall efficiency as compared to a gear unit with a worm gear only.

The rated efficiencies are achieved if the gear unit has been correctly run in, has achieved its nominal operating temperature, has the proper lubrication, and is operating within its torque rating.

Backdriving

With respect to torque driving back from the output shaft, the backdriving efficiency $\eta' = 2 - \frac{1}{\eta}$ is far less favorable than the forward efficiency η and may need to be taken into account.

The low backdriving efficiency may provide some braking effect in certain instances but since the actual efficiency is dependent on many factors including ambient temperature and worm speed, we request you submit full details to our engineering department if this braking effect is required.

Since the SEW-Eurodrive Helical-Worm gear units have fairly high efficiency, they can not be considered as self-locking, and should not be used if the self-locking effect is required.

Input Power, Output Torque, and Speed

The details on power, torque, and speed given in the selection tables always refer to the mounting position M1 or similar mounting position with standard features, standard ambient conditions, and standard lubricants. Depending upon ratio, increased output power ratings may be achieved through the use of special lubricants. Please consult your SEW-Eurodrive representative.

The output speeds have been rounded up or down. The actual output speed may vary slightly due to the motor frame size, the loading, or the supply voltage.

Design Variations

In addition to the versions shown in the accompanying pages, the Helical-Worm Gear Units are also available with the combination of double shaft, double flange or flange opposite shaft mount.

Additional features available for the Helical-Worm Gear units are:

- Adapters for IEC or NEMA C-Face motors.
- Motor mounting platforms and scoops.
- Adapters for torque limiting couplings.
- Corrosion protection.
- Torque arm attachment.
- Shrink disc shaft mounting.

Please contact your SEW-Eurodrive representative for additional information.

Abbreviations

The following abbreviations are used in the selection tables:

f_B	Service Factor
F_{Ra}	Permissible output overhung load (lb) at the midpoint of the output shaft extension
F_{Re}	Permissible input overhung load (lb) at the midpoint of the input shaft extension
i	Gear unit ratio
i_w	Worm gear stage ratio
η	Efficiency
n_a	Output speed in rpm
n_e	Input speed in rpm
P_a	Rated output power (Hp)
P_e	Calculated power input into the gear unit (Hp)
	P_e is calculated from $T_{a\,max}$ by taking into account the gear units' efficiency under standard operating conditions. For calculated P_e less than .2Hp, a dash (—) is shown in the respective selection tables since the actual values are subject to large variations.
P_n	Motor rated power (HP)
T_a	Output torque (lb-in.) with reference to the driving motor
$T_{a\,max}$	Maximum permissible output torque (lb-in.) at $f_B = 1.0$

Dimension Page Notes

The dimension sheets are valid for standard units with various basic features. In particular, motor accessories such as canopies, ventilators, etc. will alter the basic dimensions. Please refer to the respective accessory dimension pages for additional dimensions.

Motors from frame size DV112 are supplied with lifting eye bolts which can be removed. Smaller motors do not have lifting eye bolts.

Certified dimension sheets are available from your SEW-Eurodrive Assembly Center.

Viton® is a registered trademark of DuPont Dow Elastomers

Unit Selection

In order to select the most suitable gear unit it is essential that a thorough knowledge of the characteristics of the driven machine are known. The gear units are normally designed for constant torque load and only a few starts/stops. If these conditions do not exist, it is necessary to determine a service factor, $f_{B\,TOTAL}$, where $f_{B\,TOTAL} = f_B \cdot f_{B1} \cdot f_{B2}$

f_B Is determined by the start/stop frequency, Load Class, and the daily operating time.

f_{B1} Is determined by the ambient temperature.

f_{B2} Is determined by the cyclic duration factor.

f_B, f_{B1}, f_{B2} service factors are shown in the diagrams that follow.

For gearmotors, the appropriate service factor taken from the diagram is then compared with the service factor given with each speed/power combination listed in the gearmotor selection tables. To ensure a long, trouble free service life it is essential that the unit selected has a service factor equal to, or greater than, that determined from the diagram.

Load Classification

I = Uniform load. Permissible inertia acceleration factor ≤0.2

II = Moderate shock load. Permissible inertia acceleration factor ≤3.0

III = Heavy shock load. Permissible inertia acceleration factor ≤10

For inertia acceleration factor > 10, please contact your nearest SEW-Eurodrive representative.

$$\text{Inertia acceleration factor} = \frac{J_L}{J_m}$$

Where: J_L = Reflected Load Inertia
J_m = Motor Inertia

All external load inertias, J, must be reflected back to the input side of the gear unit.

$$\text{Example: } J_L = J \times \frac{1}{(\text{Gear Ratio})^2}$$

Included in the number of starts and stops per hour must be all regenerative brake actions and the speed changes from high to low speed as experienced with multi-speed motors.

Example: Load Class I with 200 starts and stops per hour and operating time of 24 hours per day gives f_B = 1.36.

AGMA

For Service Factors using AGMA criteria, please refer to the guidelines on page 35 .

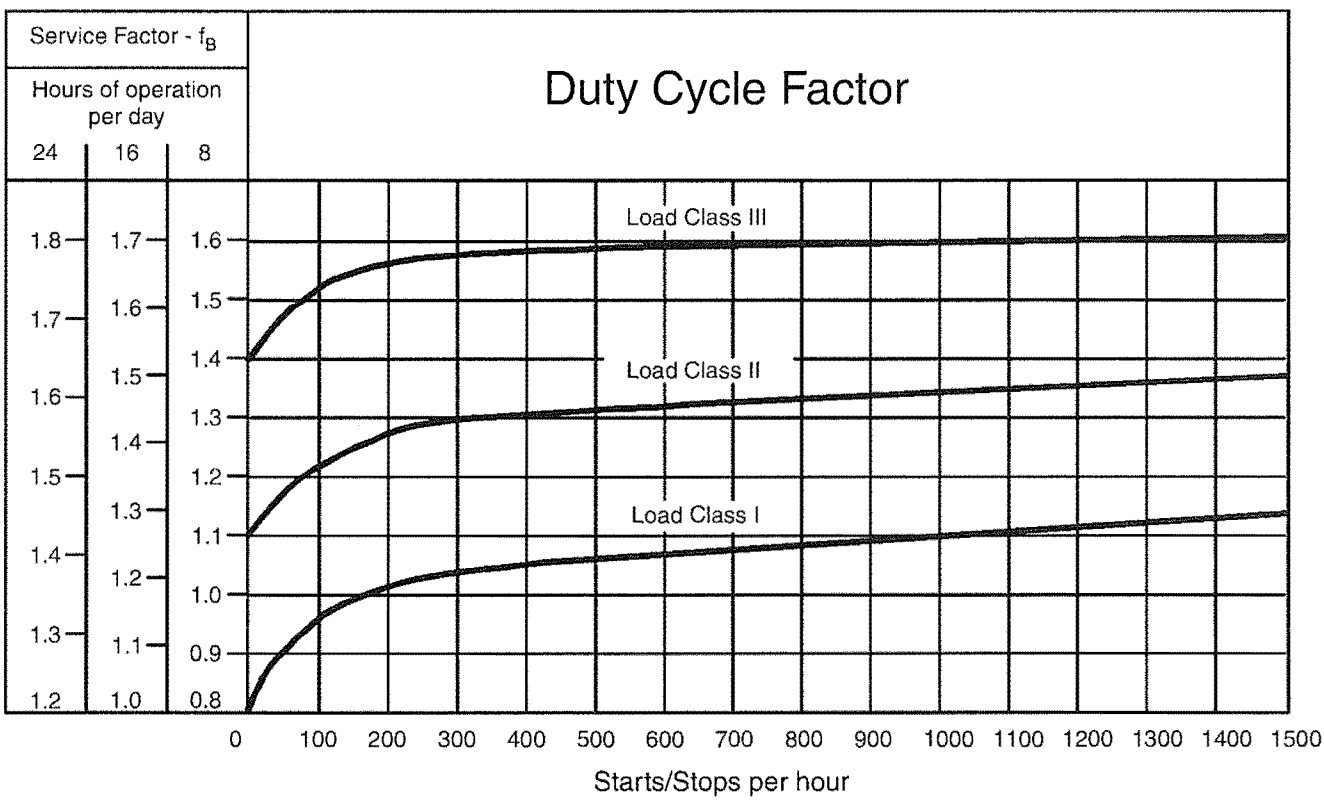

Service Factor for Increased Ambient Temperatures

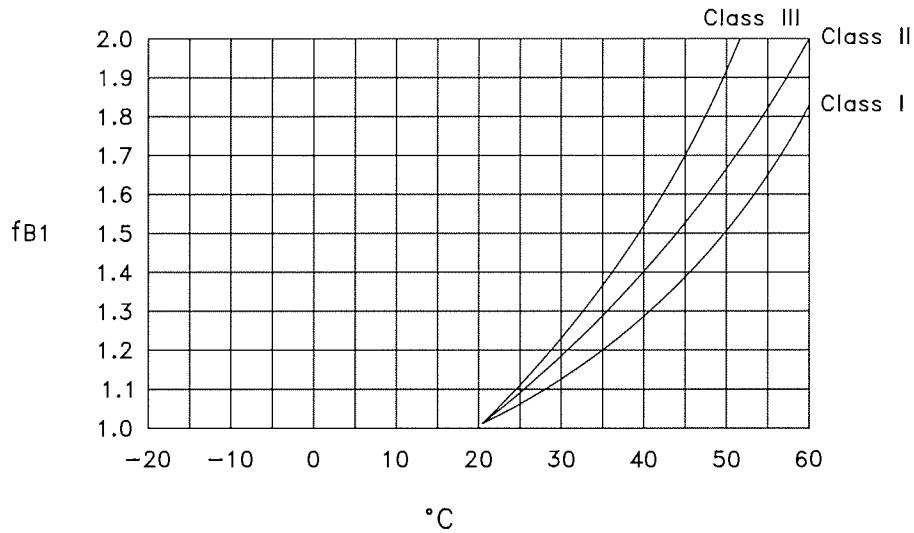

Service Factor for Intermittent Duty

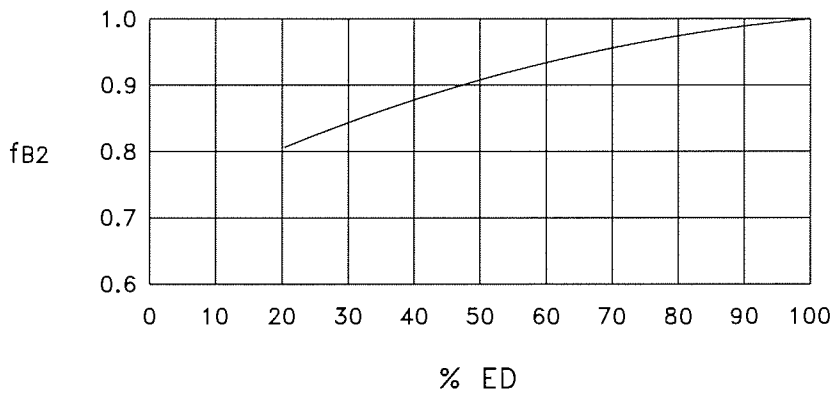

$$\%ED = \frac{\text{Running Time in Minutes}}{\text{60 Minutes}} \times 100$$

Overhung Loads, OHL, are a combination of live loads acting at right angles to the drive shaft caused by gears, sprockets, pulleys, couplings, etc., as well as dead loads applied directly on the shaft.

These overhung loads subject shaft bearings and shafts to stresses which, if exceeded, may cause premature failure of bearings and/or shaft breakage from bending fatigue.

Determination of Overhung Load - OHL

When determining the resulting overhung load, the type of transmission element mounted on the shaft end must be considered and a transmission element factor, f_z, must be included. The overhung load exerted on the output or input shafts can be calculated from the following formula. The resultant overhung load F must not exceed the permissible overhung load for the selected gear unit.

$$F = \frac{2T}{d_o} \cdot f_z$$

F = equivalent OHL in lbs.
T = load torque on the drive in lb-in.
d_o = pitch diameter of the gear, sprocket, or sheave in inches
f_z = transmission element factor

The transmission element factor, f_z, takes into account an additional radial force that is imposed on the shaft due to the type of transmission element: gear, chain sprocket, or sheave. There are gear teeth separating forces, pre-tensioning of belts, etc. that must be taken into account to determine the total equivalent radial loads. From applicational experience the following values of f_z should be used:

Transmission Element	Comments	f_z Factor
Spur or helical gears	≥ 17 teeth	1.0
	< 17 teeth	1.15
Chain sprockets	≥ 20 teeth	1.0
	< 20 teeth	1.25
	< 13 teeth	1.4
V-belt pulleys		1.75
Flat belt pulleys		2.5
Timing belt pulleys		1.3

Permissible Output Shaft Loads

The output shaft of the SEW-Eurodrive gear units are capable of accepting the axial and radial loads normally encountered by the mounting of gears, chain sprockets, belt pulleys, and shaft couplings. The permissible OHL under the most unfavorable conditions which can be applied at the midpoint of the shaft extensions for the gear unit types S and SF is shown in the respective speed/power selection tables as F_{Ra} in lbs. When the force is not applied at the midpoint of the shaft extension the F_{Ra} value must be adjusted according to the OHL conversion formulas.

It is possible in some instances for the OHL capacity to be substantially increased if the exact direction of the radial force is known. In such instances it is essential that full details be given to our engineering department to check the suitability of the unit selected.

For permissible axial and radial loads for gear unit types SA and SAF as well as for SF with output shaft projection opposite the flange and permissible axial loads for S and SF, please submit full details to our engineering department.

Output OHL Conversion

If the resultant OHL acts at a point other than at the midpoint of the output shaft extension, the permissible OHL, F_X, must be determined at the application point of the load according to the following formula:

F_{Ra}-(lb.) Permissible overhung load at the midpoint of the output shaft extension—see selection tables.
X-(in.) Distance from the shoulder on the output shaft to the application point of load.
F_X-(lb.) Permissible overhung load at the point X
a-(lb-in.) Gear unit constant - see chart for values.
b,c,d-(in.) Gear unit constant - see chart for values.

The permissible OHL is the smaller of the two values obtained from the following formulae, F_{XL} and F_{XW}, and is denoted as F_X. The permissible OHL, F_X, **must be** greater than the calculated equivalent overhung load, F.

$$\text{Permissible OHL, } F_{XL} = F_{Ra} \cdot \frac{c}{d + x} \text{ (lb)}$$

$$\text{Permissible OHL based on shaft stress, } F_{XW} = \frac{a \cdot 10^3}{b + x} \text{ (lb)}$$

Note: F_{XW} applies only when reducer torque, T_a, is maximum.

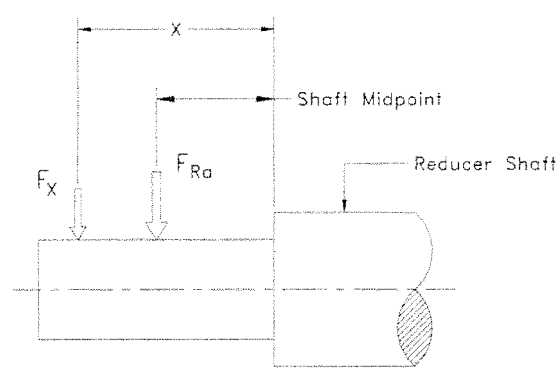

Frame Size	a lb-in.	b in.	c in.	d in.
S 37	0.53	0	4.67	3.88
S 47	1.18	0	5.12	4.13
S 57	1.89	0	5.91	4.72
S 67	2.69	0	7.24	5.87
S 77	4.66	0	8.82	7.05
S 87	14.87	0	11.08	8.72
S 97	22.48	0	12.85	10.09

DATE APRIL 30, 2004	OUTLINE DIMENSIONS	MOTOR TYPE: AEUHXF
CATALOG NO. XV0024C	3-PHASE INDUCTION MOTOR	FRAME NO. 145TC

Pole	HP	KW	Hz	VOLT	Syn. Speed RPM
4	2	1.5	60	230/460	1800

Ins	Rating	Dimension in	Approx Weight	Bearings
F	CONT.	inches	102 lbs.	DE: 6205ZZ NDE: 6205ZZ

Totally Enclosed Fan-Cooled Type, Squirrel-Cage Rotor.

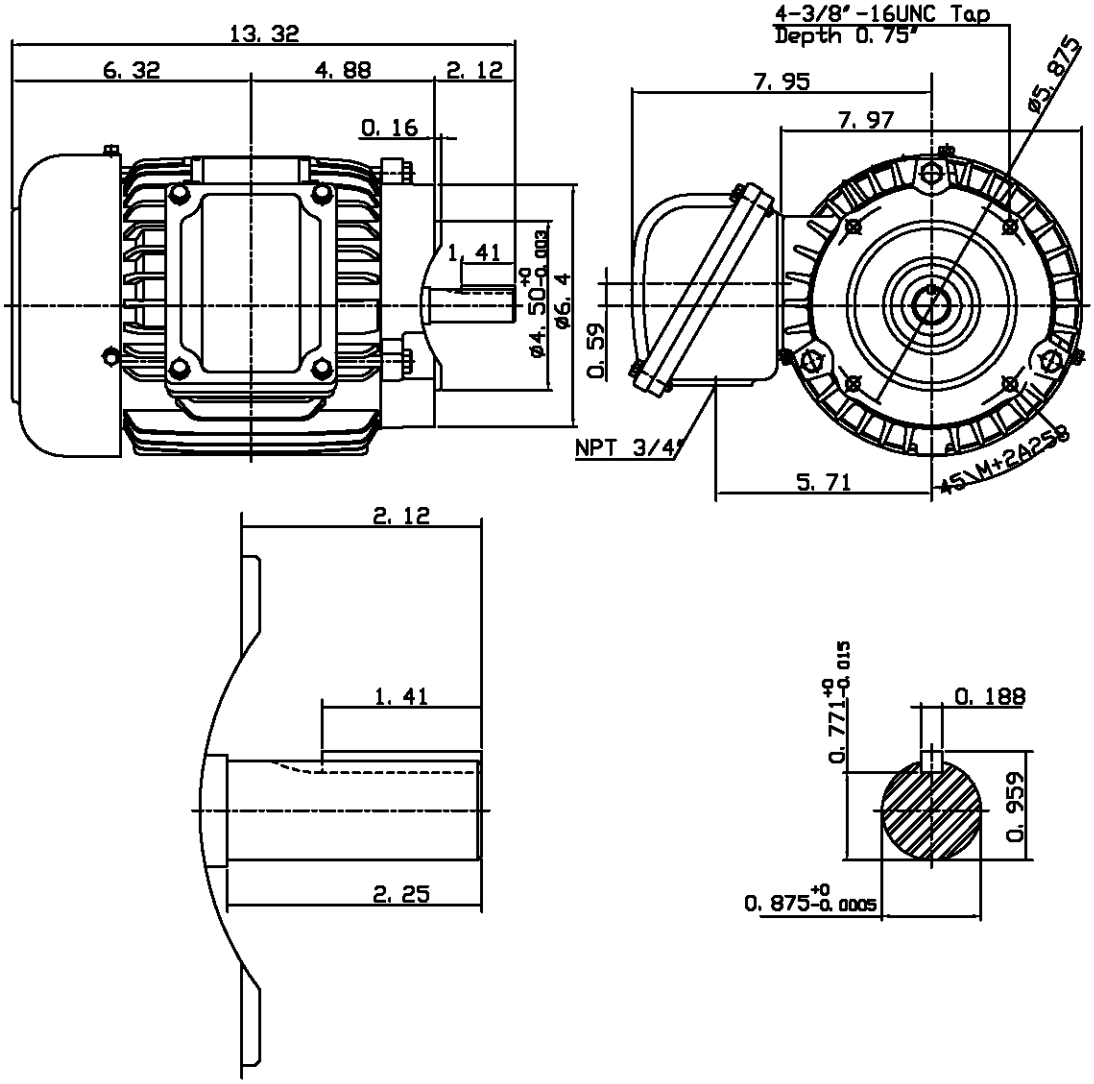

NOTE:
1.EXPLOSION PROOF:
CLASS I GROUP D AND
CLASS II GROUP E,F,G.

DWN.	J.H. LIANG	11-12-98	TECO Westinghouse	DWG NO. 31049U550003
CHKD.	C.S. LO	11-23-98		
APPD.	Y.B. HUANG	11-23-98		

TECO Westinghouse

ISSUED	PERFORMANCE DATA	ENCLOSURE
March 10, 2005	3-PHASE INDUCTION MOTOR	EXPLOSION PROOF
TYPE		CATALOG#
AEUHXF		XV0024C

NAMEPLATE INFORMATION

OUTPUT HP	OUTPUT KW	POLE	FRAME SIZE	VOLTAGE	HZ	RATED AMBIENT	INS. CLASS	NEMA DESIGN	TIME RATING	SERVICE FACTOR
2	1.5	4	145TC	230/460	60	40°C	F	B	CONT.	1.15

TYPICAL PERFORMANCE

FULL LOAD RPM	EFFICIENCY FULL LOAD MIN. %	EFFICIENCY FULL LOAD NOM. %	EFFICIENCY 3/4 LOAD %	EFFICIENCY 1/2 LOAD %	POWER FACTOR F. L. %	POWER FACTOR 3/4 LOAD %	POWER FACTOR 1/2 LOAD %	MAXIMUM POWER FACTOR CORRECTION
1715	81.5	84	84	84	78	70.5	57.5	1.3 KVAR

CURRENTS NO LOAD AT 208 VOLT	NO LOAD AT 230 VOLT	NO LOAD AT 460 VOLT	FULL LOAD AT 208 VOLT	FULL LOAD AT 230 VOLT	FULL LOAD AT 460 VOLT	LOCKED ROTOR AT 208 VOLT	LOCKED ROTOR AT 230 VOLT	LOCKED ROTOR AT 460 VOLT	NEMA KVA CODE LETTER
3.54	3.20	1.60	6.33	5.72	2.86	55.29	50.00	25.00	L

TORQUE FULL LOAD lb-ft	TORQUE LOCKED ROTOR %FLT	TORQUE PULL UP %FLT	TORQUE BREAK DOWN %FLT	INERTIA ROTOR WR^2 $lb\text{-}ft^2$	INERTIA NEMA LOAD WK^2 $lb\text{-}ft^2$	INERTIA MAX ALLOWABLE WK^2 $lb\text{-}ft^2$	ACCEL TIME NEMA LOAD WK^2 Sec	ACCEL TIME MAX ALLOWABLE WK^2 Sec
6.123	280	270	330	0.108	11	32.00	3.67	10.62

SAFE STALL TIME IN SECONDS COLD	SAFE STALL TIME IN SECONDS HOT	ALLOWABLE STARTS PER HOUR COLD	ALLOWABLE STARTS PER HOUR HOT	SOUND PRESSURE LEVEL @ 3 FT dB(A)
26	18	2	1	55

APPROVED:	M. PRATER	DRAWING NO.	31057XV0024C	REVISION 0

DATE: June 28, 2005	CONNECTION DIAGRAM	CATALOG NO.: XV0024C

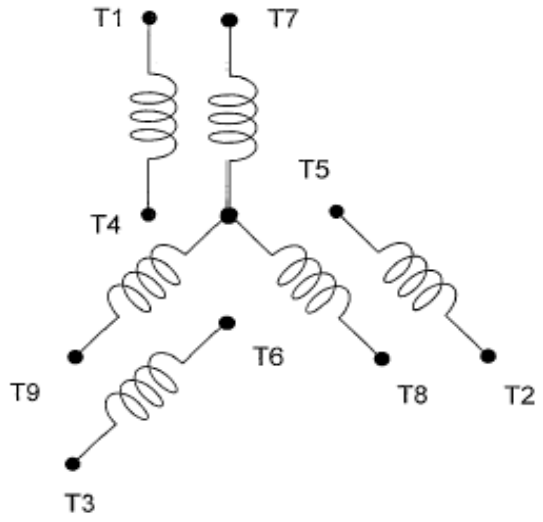

SCHEMATIC - 2Y/Y CONNECTION

ACROSS THE LINE CONNECTION

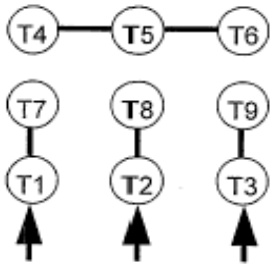

LINE
230 VOLT CONNECTION

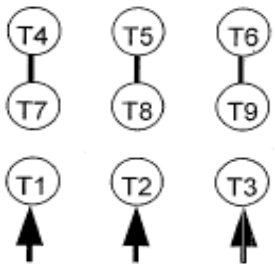

LINE
460 VOLT CONNECTION

TECO Westinghouse	DWG NO. DAC-1566-2

OPERATION & MAINTENANCE

WENATCHEE WWTP IMPROVEMENTS
PROJECT PO913
WENATCHEE, WA

SECTION 11092 – PERFORATED PLATE SCREENS
SECTION 11095 – SCREENINGS WASHER COMPACTOR

GEAR REDUCER DETAILS – DEFLECTOR DRIVE

Manufacturer:	SEW – Eurodrive
Model no.:	SA47
Type:	Unicase Helical gear reducer
Ratio:	110.73:1
AGMA Rating:	Class II
Gear Reducer Service Factor:	1.6
Output Rpm:	16
Weight:	33 lbs.
Motor Mounting:	AM 56 Adaptor

MOTOR DETAILS – DEFLECTOR DRIVE

Manufacturer:	Baldor – Reliance
Model No.:	VEM3538
Hp:	½ HP
Voltage:	208-230/460/3Ph/60Hz
Full Load Amperage:	0.78 A @ 460V
Type:	TEFC; suitable for Class I, Div.2 service
RPM:	1735
NEMA Design:	B
Insulation:	Class F with Class B Temperature Rise
Weight:	31 lbs.
Service Factor:	1.25
Mounting:	C-Face, Direct Coupled

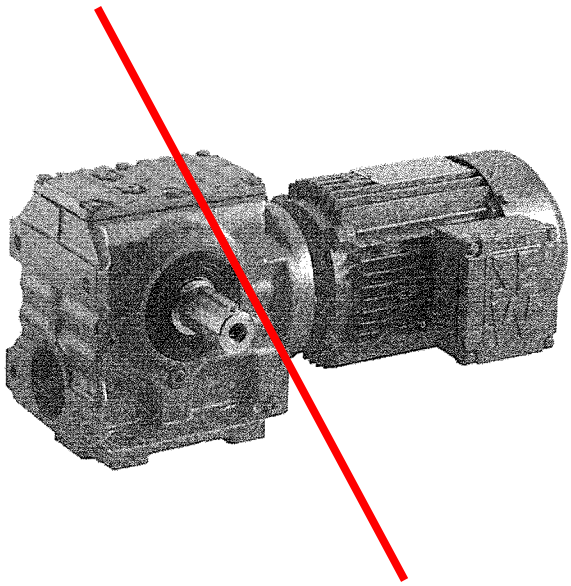

S..DT..DV..

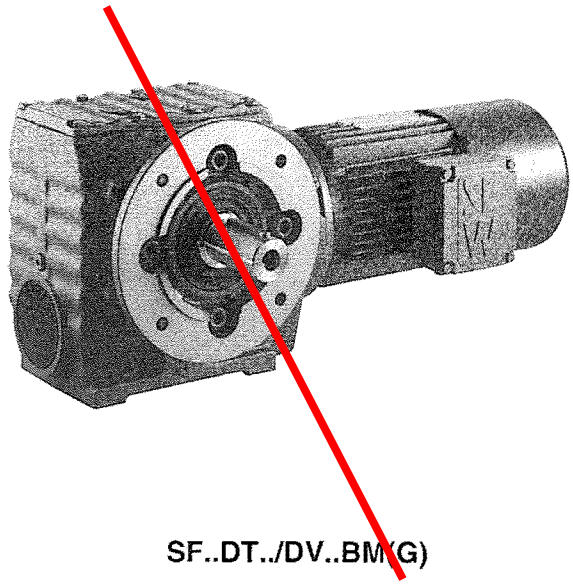

SF..DT../DV..BM(G)

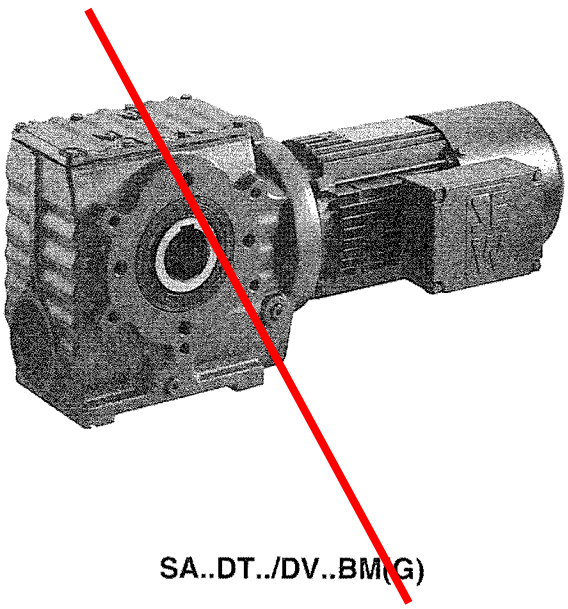

SA..DT../DV..BM(G)

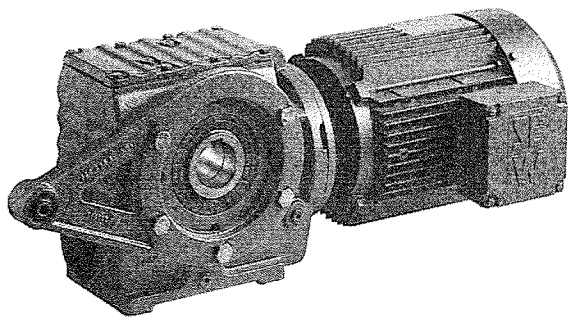

SA..TDT../DV..

	S47					AM56			AM143			AM145		
Ratio i	Output Speed n_a rpm	Input Power P_{emax} HP	Output Torque T_{amax} lb-in	Stages Pri.	Stages Sec.	Input Power P_e HP	Output Torque T_a lb-in	Output OHL F_{Ra} lb	Input Power P_e HP	Output Torque T_a lb-in	Output OHL F_{Ra} lb	Input Power P_e HP	Output Torque T_a lb-in	Output OHL F_{Ra} lb
201.00	8.70	0.39	1500	2	-	0.39	1500	1200	-	-	-	-	-	-
184.80	9.50	0.41	1490	2	-	0.41	1490	1200	-	-	-	-	-	-
158.12	11	0.47	1490	2	-	0.47	1490	1200	0.47	1490	1200	-	-	-
137.05	13	0.52	1480	2	-	0.52	1480	1210	0.52	1480	1210	0.52	1480	1210
128.10	14	0.56	1480	2	-	0.56	1480	1210	0.56	1480	1210	0.56	1480	1210
110.73	16	0.63	1480	2	-	0.63	1480	1210	0.63	1480	1210	0.63	1480	1210
94.08	19	0.73	1480	2	-	0.73	1480	1210	0.73	1480	1210	0.73	1480	1210
84.00	21	0.81	1480	2	-	0.75	1350	1220	0.81	1480	1210	0.81	1480	1210
71.75	24	0.93	1480	2	-	0.75	1160	1240	0.93	1480	1200	0.93	1480	1200
69.39	25	0.73	1370	2	-	0.73	1370	1170	-	-	-	-	-	-
67.20	26	0.97	1450	2	-	0.75	1090	1250	0.97	1450	1170	0.97	1450	1170
63.80	27	0.80	1370	2	-	0.75	1280	1150	-	-	-	-	-	-
56.61	31	1.05	1350	2	-	-	-	-	-	-	-	1.05	1350	1110
54.59	32	0.92	1370	2	-	0.75	1110	1120	0.92	1370	1060	-	-	-
47.32	37	1.05	1370	2	-	0.75	960	1080	1	1310	1010	1.05	1370	990
44.22	40	1.12	1370	2	-	0.75	900	1070	1	1250	1000	1.12	1370	960
38.23	46	1.28	1370	2	-	0.75	780	1040	1	1060	970	1.28	1370	900
32.48	54	1.46	1370	2	-	0.75	665	1000	1	900	950	1.46	1370	840
29.00	60	1.60	1360	2	-	0.75	595	970	1	810	920	1.60	1360	800
24.77	71	1.86	1280	2	-	0.75	505	940	1	690	900	1.86	1280	760
23.20	75	1.86	1260	2	-	0.75	470	920	1	645	880	1.86	1260	745
20.33	86	1.60	970	2	-	0.75	460	840	1	620	790	-	-	-
19.54	90	1.86	1090	2	-	-	-	-	-	-	-	1.86	1090	725
17.62	99	1.73	960	2	-	0.75	400	820	1	540	770	1.73	960	640
16.47	106	1.86	960	2	-	0.75	370	800	1	505	765	1.86	960	620
14.24	123	2.13	960	2	-	0.75	320	775	1	435	740	2	890	600
12.10	145	2.53	960	2	-	0.75	275	745	1	370	715	2	760	595
10.80	162	2.83	960	2	-	0.75	240	725	1	325	695	2	680	590
9.23	190	3.19	930	2	-	0.75	205	695	1	285	670	2	585	580
8.64	203	3.19	890	2	-	0.75	195	680	1	265	660	2	540	575
7.28	240	3.33	760	2	-	0.75	159	650	1	220	630	2	460	560

Please consult your SEW-Eurodrive Assembly Center for additional speed (RPM) selections and dimension pages not listed.

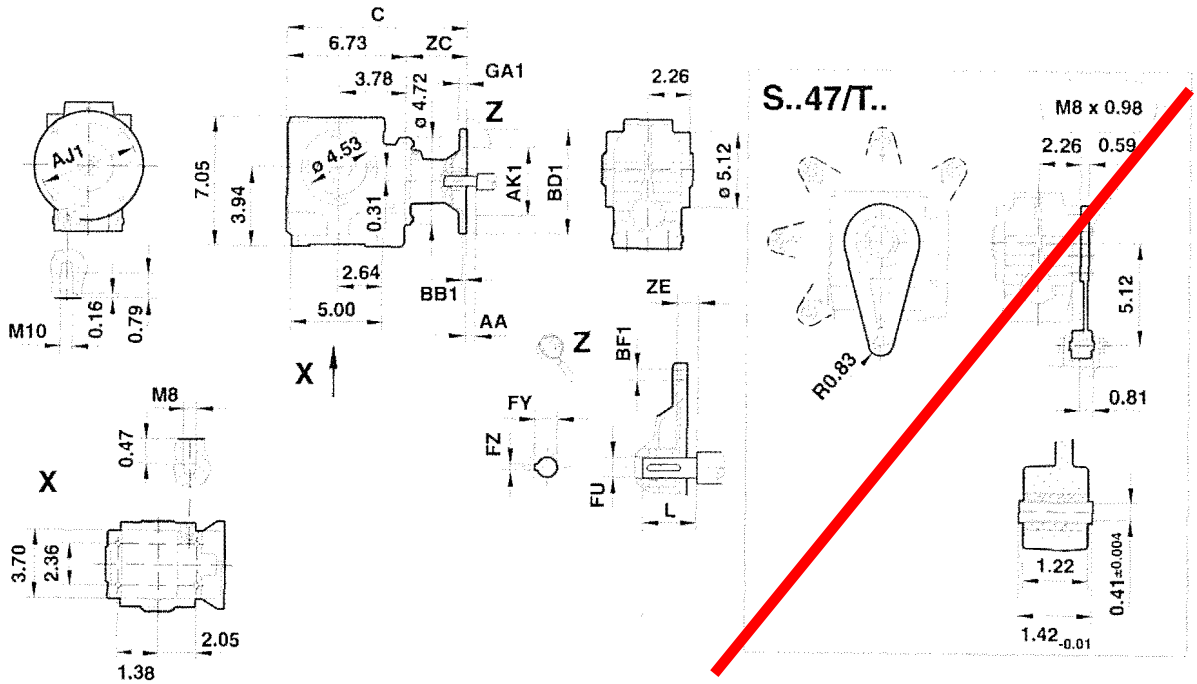

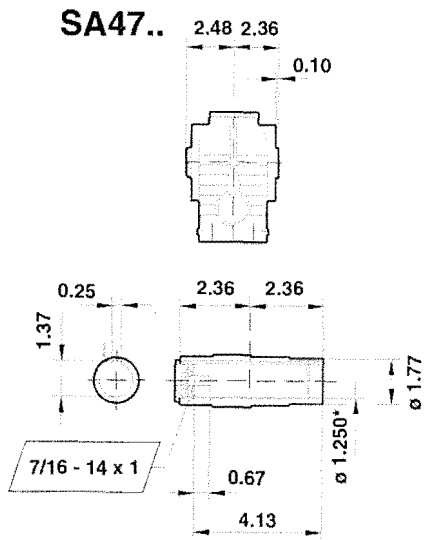

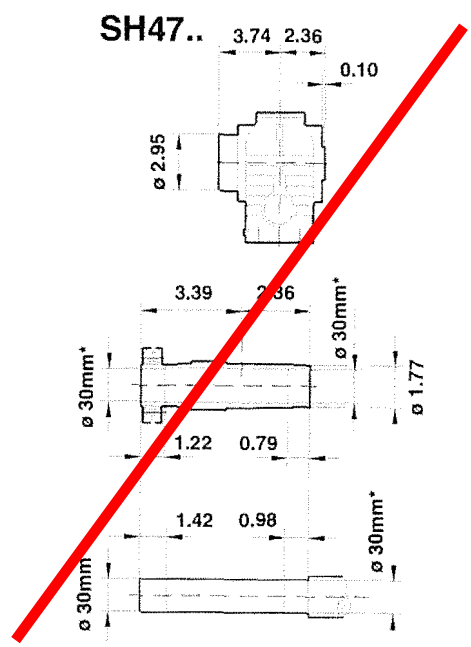

		AK1	GA1	AJ1	BB1	BD1	C	AA	BF1	ZC	ZE	FU	L	FY	FZ
SA47 SH47	AM56	4.50	0.43	5.875	0.18	6.69	10.41	-0.19	0.41	3.68	0.65	0.625	1.85	0.71	0.188
	AM143	4.50	0.47	5.875	0.18	6.69	11.34	0.12	0.41	4.61	0.57	0.875	2.24	0.98	0.188
	AM145	4.50	0.47	5.875	0.18	6.69	11.34	0.12	0.41	4.61	0.57	0.875	2.24	0.98	0.188

*Refer to page 101 for tolerance information
Dimensions subject to change without notice

Refer to page 94 for Alternate Shafts
See page 99 for Compound Reducer Information

SA/SH47-97

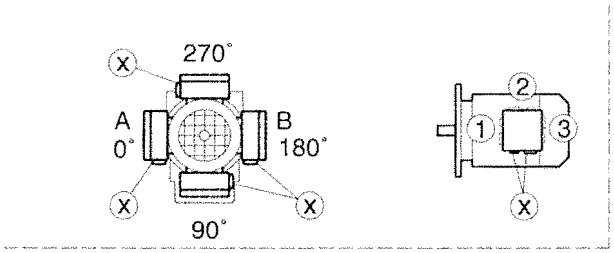

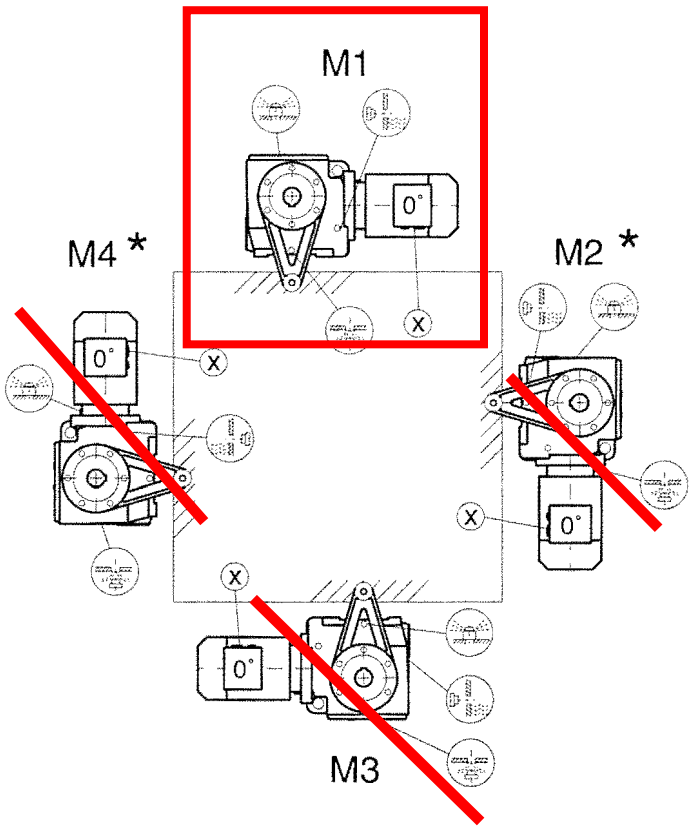

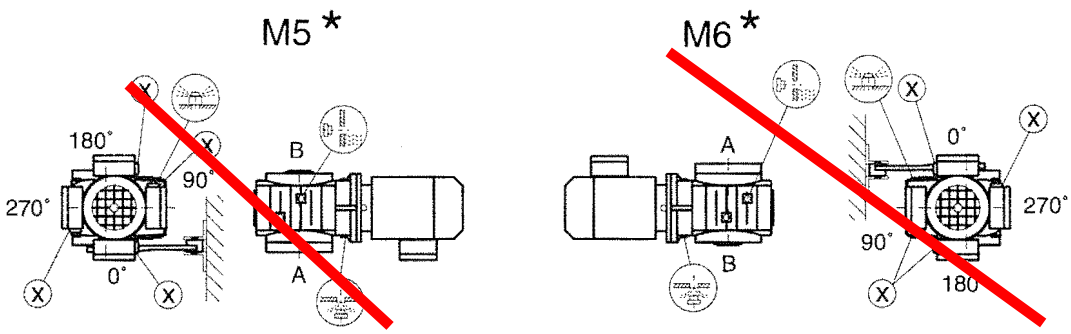

* → page 11

The approximate lubricant in US **gallons and liters** per mounting position is as follows:

Gear Unit	Mounting Position											
	M1		M2		M3 [1]		M4		M5		M6	
	Gallons	Liters	Gallons	Liters	Gallons	Liters	Gallons	Liters	Gallons	Liters	Gallons	Liters
S07	0.07	0.25	0.11	0.4	0.13	0.5	0.16	0.6	0.11	0.4	0.11	0.4
S47	0.09	0.35	0.21	0.8	0.18 (0.24)	0.7 (0.9)	0.29	1.1	0.21	0.8	0.21	0.8
S57	[illegible]	0.5	0.32	1.2	0.26 (0.32)	1 (1.2)	0.40	1.5	0.34	1.3	0.34	1.3
S67	0.26	[illegible]	0.53	2	0.58 (0.82)	2.2 (3.1)	0.85	3.2	0.69	2.6	0.69	2.6
S77	0.50	1.9	[illegible]	4.2	0.98 (1.43)	3.7 (5.4)	1.59	6	1.16	4.4	1.16	4.4
S87	0.87	3.3	2.14	[illegible]	1.82 (2.75)	6.9 (10.4)	3.17	12	2.22	8.4	2.22	8.4
S97	1.80	6.8	3.96	15	3.54 ([illegible])	13.4 (18)	5.94	22.5	4.49	17	4.49	17
SF37	0.07	0.25	0.11	0.4	0.13	0.5	0.16	0.6	0.11	0.4	0.11	0.4
SF47	0.11	0.4	0.24	0.9	0.24 (0.29)	[illegible] (1.1)	0.32	1.2	0.26	1	0.26	1
SF57	0.13	0.5	0.32	1.2	0.26 (0.40)	1 (1.5)	[illegible]	1.6	0.37	1.4	0.37	1.4
SF67	0.26	1	0.58	2.2	0.61 (0.79)	2.3 (3)	0.85	[illegible]	0.71	2.7	0.71	2.7
SF77	0.50	1.9	1.08	4.1	1.03 (1.53)	3.9 (5.8)	1.72	6.5	[illegible]	4.9	1.29	4.9
SF87	1.00	3.8	2.11	8	1.88 (2.67)	7.1 (10.1)	3.17	12	2.40	[illegible]	2.40	9.1
SF97	1.96	7.4	3.96	15	3.65 (4.97)	13.8 (18.8)	6.24	23.6	4.76	18	[illegible]	18
SA/SH37 SAF/SHF37 SAZ/SHZ37	0.07	0.25	0.11	0.4	0.13	0.5	0.16	0.6	0.11	0.4	0.11	[illegible]
SA/SH47 SAF/SHF47 SAZ/SHZ47	0.11	0.4	0.21	0.8	0.18 (0.24)	0.7 (0.9)	0.29 [2]	1.1 [2]	0.21	0.8	0.21	0.8
SA/SH57 SAF/SHF57 SAZ/SHZ57	0.13	0.5	0.29	1.1	0.26 (0.40)	1 (1.5)	0.42	1.6	0.32	1.2	0.32	1.2
SA/SH67 SAF/SHF67 SAZ/SHZ67	0.26	1	[illegible]	2	0.48 (0.69)	1.8 (2.6)	0.77	2.9	0.66	2.5	0.66	2.5
SA/SH77 SAF/SHF77 SAZ/SHZ77	0.48	1.8	1.03	3.9	[illegible] (1.32)	3.6 ([illegible])	1.56	5.9	1.19	4.5	1.19	4.5
SA/SH87 SAF/SHF87 SAZ/SHZ87	1.00	3.8	1.96	7.4	1.59 (2.30)	6 (8.7)	2.96	11.2	2.11	8	2.11	8
SA/SH97 SAF/SHF97 SAZ/SHZ97	1.85	7	3.70	14	3.01 (4.23)	11.4 (16)	5.55	21	4.15	15.7	[illegible]	15.7

[1] On compound gear units the primary (larger) gear unit is provided with the oil quantity in parenthesis.

[2] When combined with a 2-pole motor at M4 mounting position, the oil quantity must be reduced to 0.28 gallons (1.05 liters).

For compound drives the R reducer requires its own oil filling as shown in the chart:

Gear Unit	Mounting Position					
	M1/M3/M5/M6		M2		M4	
	Gallons	Liters	Gallons	Liters	Gallons	Liters
R17	0.07	0.25	0.16	[illegible]	0.16	0.6
R37	0.11	0.4	0.24	0.9	[illegible]	1.1
R57	0.21	0.8	0.48	1.8	0.53	[illegible]

Lubricant table

	6) °C -50 0 +50 +100	DIN (ISO)	ISO, NLGI	Mobil®	Shell	Klüberoil	ARAL	BP	Tribol	TEXACO	Optimol	FUCHS
R...	Standard -10 +40	CLP(CC)	VG 220	Mobilgear 630	Shell Omala 220	Klüberoil GEM 1-220	Aral Degol BG 220	BP Energol GR-XP220	Tribol 1100/220	Meropa 220	Optigear BM 220	Renolin CLP220
	-25 +80	CLPPG	VG 220	Mobil Glygolyle 30	Shell Tivela WB	Klübersynth GH 6-220	Aral Degol GS 220	BP Enersyn SG-XP220	Tribol 800/220	Synlube CLP220	Optiflex A 220	
K...(HK...)	4) -40 +80	CLPHC	VG 220	Mobil SHC 630	Shell Omala 220 HD	Klübersynth EG 4-220	Aral Degol PAS 220		Tribol 1510/220	Pinnacle EP220	Optigear Synthetic A 220	Renolin Unisyn CLP220
	4) -40 +40		VG 150	Mobil SHC 629		Klübersynth EG 4-150				Pinnacle EP150		
	-20 +25	CLP(CC)	VG 150 VG 100	Mobilgear 627	Shell Omala 100	Klüberoil GEM 1-150	Aral Degol BG 100	BP Energol GR-XP100	Tribol 1100/100	Meropa 150	Optigear BM 100	Renolin CLP150
F...	-30 +10	HLP(HM)	VG 68-46 VG 32	Mobil D.T.E. 13M	Shell Tellus T 32	Klüberoil GEM 1-68	Aral Degol BG 46		Tribol 1100/68	Rando EP Ashless 46	Optigear 32	Renolin B 46 HVI
	4) -40 +10	CLPHC	VG 32	Mobil SHC 624		Klüber-Summit HySyn FG-32				Cetus PAO 46		
	4) -40 -20	HLP(HM)	VG 22 VG 15	Mobil D.T.E. HM	Shell Tellus T 15	Isoflex MT 30 ROT		BP Energol HLP-HM 10		Rando HDZ 15		
S...(HS...)	Standard 0 +40	CLP(CC)	VG 680	Mobilgear 636	Shell Omala 680	Klüberoil GEM 1-680	Aral Degol BG 680	BP Energol GR-XP680	Tribol 1100/680	Meropa 680	Optigear BM 680	Renolin CLP680
	-20 +60	CLPPG	VG 680 1)	Mobil Glygoyle HE 680		Klübersynth GH 6-680		BP Enersyn SG-XP680	Tribol 800/680	Synlube CLP680		
	4) -30 +80	CLPHC	VG 460	Mobil SHC 634	Shell Omala 460 HD	Klübersynth EG 4-460				Pinnacle EP460		
	4) -40 +10		VG 150	Mobil SHC 629		Klübersynth EG 4-150				Pinnacle EP150		
	-20 +10	CLP(CC) HLP(HM)	VG 150 VG 100	Mobilgear 627	Shell Omala 100	Klüberoil GEM 1-150	Aral Degol BG 100	BP Energol GR-XP100	Tribol 1100/100	Meropa 100	Optigear BM 100	Renolin CLP150
	-25 +20	CLPPG	VG 220 1)	Mobil Glygoyle 30		Klübersynth GH 6-220			Tribol 800/220	Synlube CLP220	Optiflex A 220	
	4) -40 0	CLPHC	VG 32	Mobil SHC 624		Klüber-Summit HySyn FG-32				Cetus PAO 46		
R..., R...(HW...), F..., S...(HS...)	4) -30 +40	HCE 7)	VG 460		Shell Cassida Fluid GL460	Klüberoil 4UH1-460	Aral Eural Gear 460				Optileb GT 460	
	-20 +40	E 8)	VG 460			Klüberbio CA2-460	Aral Degol BAB 460				Optisynt BS 460	
W...(HW...)	Standard -20 +40	SEW PG	VG 460 2)			Klüber SEW HT-460-5						
	4) -40 +10	API GL5	SAE 75W90 (~VG 100)	Mobilube SHC 75 W90-LS								
	-20 +40	CLPPG 7)	VG 460 3)			Klübersynth UH1 6-460						
R32 R302	-25 +60	DIN 51 818 5)	00	Glygoyle Grease 00	Shell Tivela Compound A	Klübersynth GE 46-1200				Multifak 6833 EP00		
	Standard -15 +40		000 - 0	Mobilux EP004	Shell Alvania GL00		Aralub MFL00	BP Energrease LS-EP00		Multifak EP000	Longtime PD 00	Renolin SF 7 - 041

The lubricant table above shows the permitted lubricants for SEW gear units. Please note the following key to the lubricant table.

Key to the lubricant table

CLP	= Mineral oil
CLP PG	= Polyglycol (W gear units, conforms to USDA-H1)
CLP HC	= Synthetic hydrocarbons
E	= Ester oil (water pollution danger category WGK 1)
HCE	= Synthetic hydrocarbons + ester oil (USDA - H1 certification)
HLP	= Hydraulic oil
	= Synthetic lubricant (= synthetic-based anti-friction bearing grease)
	= Mineral lubricant (= mineral-based anti-friction bearing grease)

1) Helical-worm gear units with PG oil: Please contact SEW
2) Special lubricant for Spiroplan® gear units only
3) Recommendation: Select SEW $f_B \geq 1.2$
4) Note critical starting behavior at low temperatures!
5) Low-viscosity grease
6) Ambient temperature
7) Lubricant for the food processing industry
8) Biodegradable oil (lubricant for use in agriculture, forestry and water resources)

8. Design and Operating Notes

8.1. Lubricants

General Information

Unless a special arrangement is made, SEW supplies the drives with a lubricant fill specifically for the gear unit and mounting position. The decisive factor is the mounting position (M1 – M6, Refer to "Mounting Positions" on page 52) specified when ordering the drive. You must adapt the lubricant fill to any subsequent changes made to the mounting position. Refer to Lubricant fill quantities on page 78.

Anti-friction bearing greases

The anti-friction bearings in SEW gear units are given a factory-fill with the greases listed in the following table. SEW recommends regreasing anti-friction bearings with a grease fill at the same time as changing the oil.

	Ambient temperature	Manufacturer	Type
Anti-friction bearing in gear unit	-30 °C – +60 °C	Mobil	Mobilux EP 2
	-40 °C – +80 °C	Mobil	Mobiltemp SHC 100
Special greases for anti-friction bearings in gear units:			
Biodegradable oil	-30 °C – +40 °C	Aral	Aral Eural Grease EP 2
Lubricant for Food Processing Industry	-20 °C – +40 °C	Klüber	Klüberbio M32-82

The following grease quantities are required:

- For fast-running bearings (motor and gear unit input end): Fill the cavities between the roll barrels one third full with grease.
- For slow-running bearings (in gear units and gear unit output end): Fill the cavities between the roll barrels two thirds full with grease.

Introduction

The SEW-Eurodrive Helical-Worm Gear Units are designed for continuous duty under difficult operating conditions. Only materials of the highest quality are used in the manufacture of the units. These units have the following standard construction features:

- Gearcase and flanges of high strength gray cast iron SAE Class 30.
- Double seals on output shafts with additional inner seal made of Viton®.
- Captured keys on input and output shafts.
- Foot mounted, flange mounted, flange mounted with hollowshaft, or shaft mounted.

Efficiency

The efficiency of the gear units is mostly determined by the gearing and bearing friction, and ranges up to approximately 92%. However, due to the sliding friction of the worm gearing, the actual efficiency depends upon the gear ratio of the worm stage and the input speed.

Please see the tables in the current Speed Reducer Catalog for efficiencies by ratio and input speed.

The helical-worm gear units have an input helical gear stage which reduces the ratio of the worm gear stage and as a result improves the overall efficiency as compared to a gear unit with a worm gear only.

The rated efficiencies are achieved if the gear unit has been correctly run in, has achieved its nominal operating temperature, has the proper lubrication, and is operating within its torque rating.

Backdriving

With respect to torque driving back from the output shaft, the backdriving efficiency $\eta' = 2 - \frac{1}{\eta}$ is far less favorable than the forward efficiency η and may need to be taken into account.

The low backdriving efficiency may provide some braking effect in certain instances but since the actual efficiency is dependent on many factors including ambient temperature and worm speed, we request you submit full details to our engineering department if this braking effect is required.

Since the SEW-Eurodrive Helical-Worm gear units have fairly high efficiency, they can not be considered as self-locking, and should not be used if the self-locking effect is required.

Input Power, Output Torque, and Speed

The details on power, torque, and speed given in the selection tables always refer to the mounting position M1 or similar mounting position with standard features, standard ambient conditions, and standard lubricants. Depending upon ratio, increased output power ratings may be achieved through the use of special lubricants. Please consult your SEW-Eurodrive representative.

The output speeds have been rounded up or down. The actual output speed may vary slightly due to the motor frame size, the loading, or the supply voltage.

Design Variations

In addition to the versions shown in the accompanying pages, the Helical-Worm Gear Units are also available with the combination of double shaft, double flange or flange opposite shaft mount.

Additional features available for the Helical-Worm Gear units are:

- Adapters for IEC or NEMA C-Face motors.
- Motor mounting platforms and scoops.
- Adapters for torque limiting couplings.
- Corrosion protection.
- Torque arm attachment.
- Shrink disc shaft mounting.

Please contact your SEW-Eurodrive representative for additional information.

Abbreviations

The following abbreviations are used in the selection tables:

f_B	Service Factor
F_{Ra}	Permissible output overhung load (lb) at the midpoint of the output shaft extension
F_{Re}	Permissible input overhung load (lb) at the midpoint of the input shaft extension
i	Gear unit ratio
i_w	Worm gear stage ratio
η	Efficiency
n_a	Output speed in rpm
n_e	Input speed in rpm
P_a	Rated output power (Hp)
P_e	Calculated power input into the gear unit (Hp)
	P_e is calculated from $T_{a\,max}$ by taking into account the gear units' efficiency under standard operating conditions. For calculated P_e less than .2Hp, a dash (—) is shown in the respective selection tables since the actual values are subject to large variations.
P_n	Motor rated power (HP)
T_a	Output torque (lb-in.) with reference to the driving motor
$T_{a\,max}$	Maximum permissible output torque (lb-in.) at $f_B = 1.0$

Dimension Page Notes

The dimension sheets are valid for standard units with various basic features. In particular, motor accessories such as canopies, ventilators, etc. will alter the basic dimensions. Please refer to the respective accessory dimension pages for additional dimensions.

Motors from frame size DV112 are supplied with lifting eye bolts which can be removed. Smaller motors do not have lifting eye bolts.

Certified dimension sheets are available from your SEW-Eurodrive Assembly Center.

Viton® is a registered trademark of DuPont Dow Elastomers

Unit Selection

In order to select the most suitable gear unit it is essential that a thorough knowledge of the characteristics of the driven machine are known. The gear units are normally designed for constant torque load and only a few starts/stops. If these conditions do not exist, it is necessary to determine a service factor, $f_{B\,TOTAL}$, where $f_{B\,TOTAL} = f_B \cdot f_{B1} \cdot f_{B2}$

f_B Is determined by the start/stop frequency, Load Class, and the daily operating time.

f_{B1} Is determined by the ambient temperature.

f_{B2} Is determined by the cyclic duration factor.

f_B, f_{B1}, f_{B2} service factors are shown in the diagrams that follow.

For gearmotors, the appropriate service factor taken from the diagram is then compared with the service factor given with each speed/power combination listed in the gearmotor selection tables. To ensure a long, trouble free service life it is essential that the unit selected has a service factor equal to, or greater than, that determined from the diagram.

Load Classification

I = Uniform load. Permissible inertia acceleration factor ≤0.2

II = Moderate shock load. Permissible inertia acceleration factor ≤3.0

III = Heavy shock load. Permissible inertia acceleration factor ≤10

For inertia acceleration factor > 10, please contact your nearest SEW-Eurodrive representative.

$$\text{Inertia acceleration factor} = \frac{J_L}{J_m}$$

Where: J_L = Reflected Load Inertia
J_m = Motor Inertia

All external load inertias, J, must be reflected back to the input side of the gear unit.

$$\text{Example: } J_L = J \times \frac{1}{(\text{Gear Ratio})^2}$$

Included in the number of starts and stops per hour must be all regenerative brake actions and the speed changes from high to low speed as experienced with multi-speed motors.

Example: Load Class I with 200 starts and stops per hour and operating time of 24 hours per day gives f_B = 1.36.

AGMA

For Service Factors using AGMA criteria, please refer to the guidelines on page 35 .

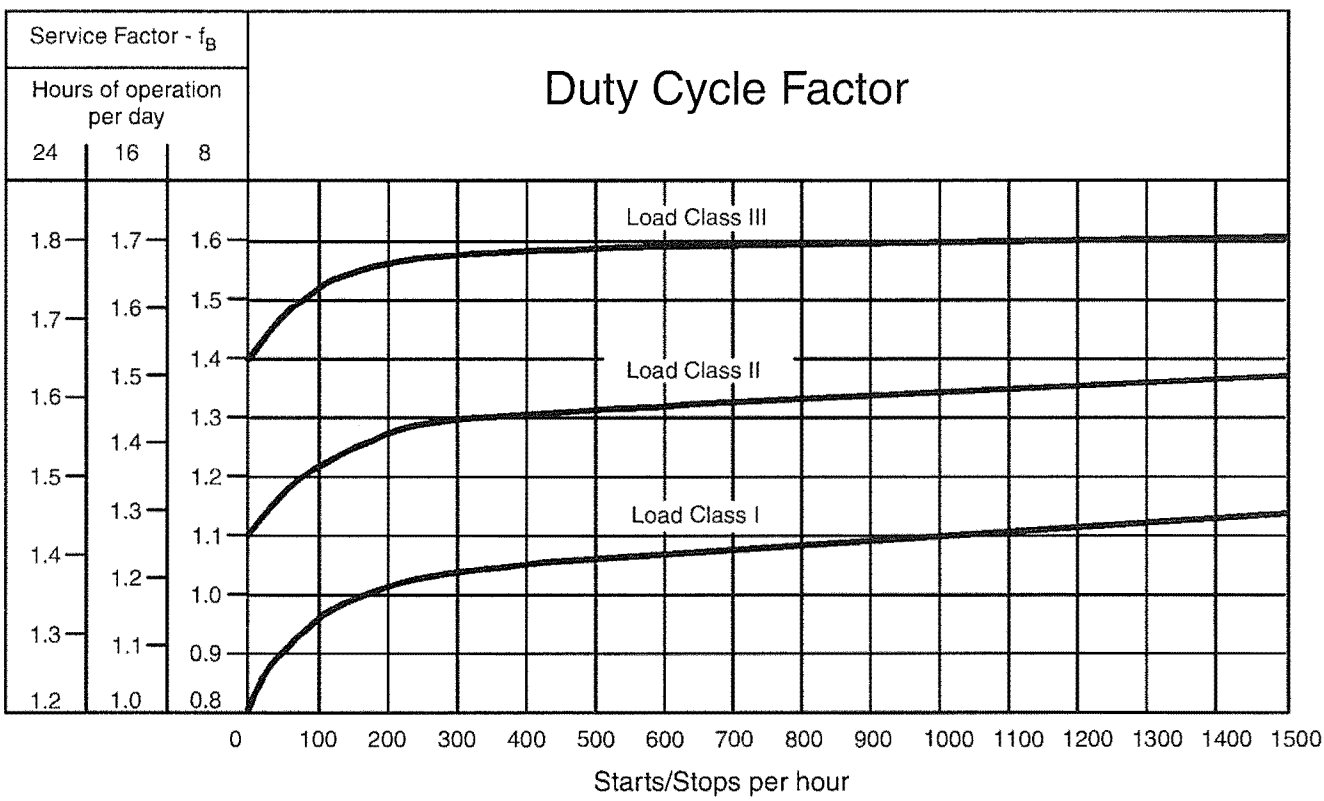

Service Factor for Increased Ambient Temperatures

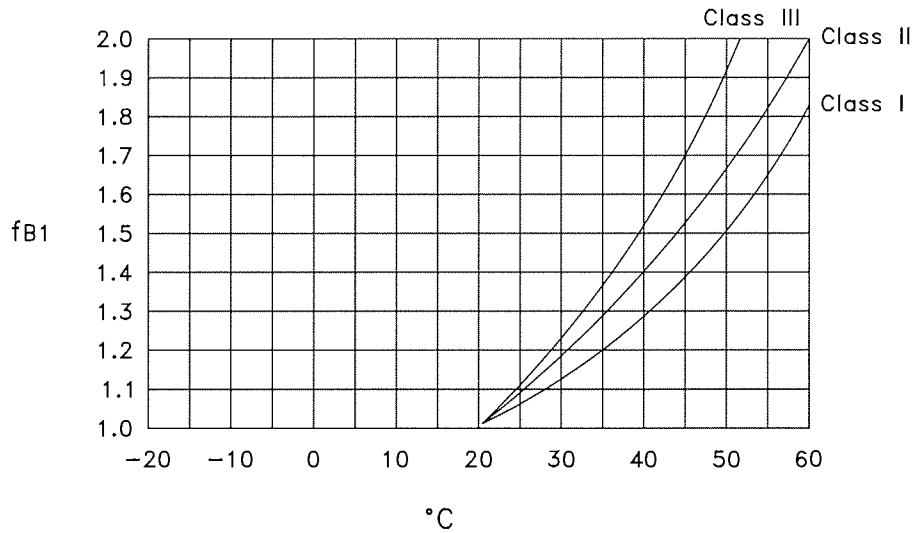

Service Factor for Intermittent Duty

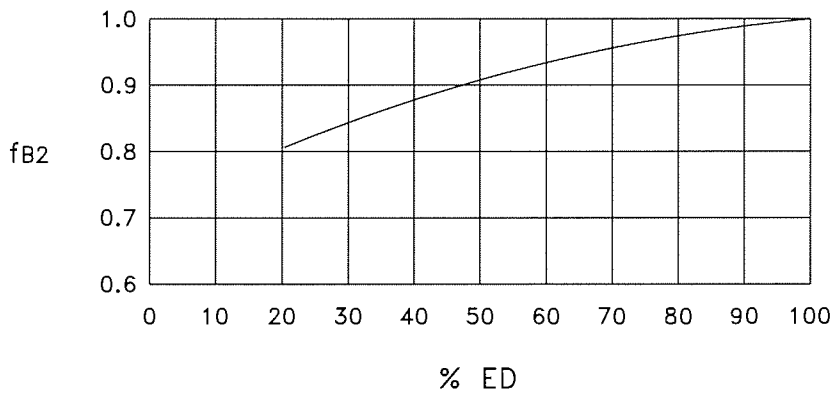

$$\%ED = \frac{\text{Running Time in Minutes}}{\text{60 Minutes}} \times 100$$

Overhung Loads, OHL, are a combination of live loads acting at right angles to the drive shaft caused by gears, sprockets, pulleys, couplings, etc., as well as dead loads applied directly on the shaft.

These overhung loads subject shaft bearings and shafts to stresses which, if exceeded, may cause premature failure of bearings and/or shaft breakage from bending fatigue.

Determination of Overhung Load - OHL

When determining the resulting overhung load, the type of transmission element mounted on the shaft end must be considered and a transmission element factor, f_z, must be included. The overhung load exerted on the output or input shafts can be calculated from the following formula. The resultant overhung load F must not exceed the permissible overhung load for the selected gear unit.

$$F = \frac{2T}{d_o} \cdot f_z$$

F = equivalent OHL in lbs.
T = load torque on the drive in lb-in.
d_o = pitch diameter of the gear, sprocket, or sheave in inches
f_z = transmission element factor

The transmission element factor, f_z, takes into account an additional radial force that is imposed on the shaft due to the type of transmission element: gear, chain sprocket, or sheave. There are gear teeth separating forces, pre-tensioning of belts, etc. that must be taken into account to determine the total equivalent radial loads. From applicational experience the following values of f_z should be used:

Transmission Element	Comments	f_z Factor
Spur or helical gears	≥ 17 teeth	1.0
	< 17 teeth	1.15
Chain sprockets	≥ 20 teeth	1.0
	< 20 teeth	1.25
	< 13 teeth	1.4
V-belt pulleys		1.75
Flat belt pulleys		2.5
Timing belt pulleys		1.3

Permissible Output Shaft Loads

The output shaft of the SEW-Eurodrive gear units are capable of accepting the axial and radial loads normally encountered by the mounting of gears, chain sprockets, belt pulleys, and shaft couplings. The permissible OHL under the most unfavorable conditions which can be applied at the midpoint of the shaft extensions for the gear unit types S and SF is shown in the respective speed/power selection tables as F_{Ra} in lbs. When the force is not applied at the midpoint of the shaft extension the F_{Ra} value must be adjusted according to the OHL conversion formulas.

It is possible in some instances for the OHL capacity to be substantially increased if the exact direction of the radial force is known. In such instances it is essential that full details be given to our engineering department to check the suitability of the unit selected.

For permissible axial and radial loads for gear unit types SA and SAF as well as for SF with output shaft projection opposite the flange and permissible axial loads for S and SF, please submit full details to our engineering department.

Output OHL Conversion

If the resultant OHL acts at a point other than at the midpoint of the output shaft extension, the permissible OHL, F_X, must be determined at the application point of the load according to the following formula:

F_{Ra}-(lb.) Permissible overhung load at the midpoint of the output shaft extension—see selection tables.
X-(in.) Distance from the shoulder on the output shaft to the application point of load.
F_X-(lb.) Permissible overhung load at the point X
a-(lb-in.) Gear unit constant - see chart for values.
b,c,d-(in.) Gear unit constant - see chart for values.

The permissible OHL is the smaller of the two values obtained from the following formulae, F_{XL} and F_{XW}, and is denoted as F_X. The permissible OHL, F_X, **must be** greater than the calculated equivalent overhung load, F.

$$\text{Permissible OHL, } F_{XL} = F_{Ra} \cdot \frac{c}{d + x} \text{ (lb)}$$

$$\text{Permissible OHL based on shaft stress, } F_{XW} = \frac{a \cdot 10^3}{b + x} \text{ (lb)}$$

Note: F_{XW} applies only when reducer torque, T_a, is maximum.

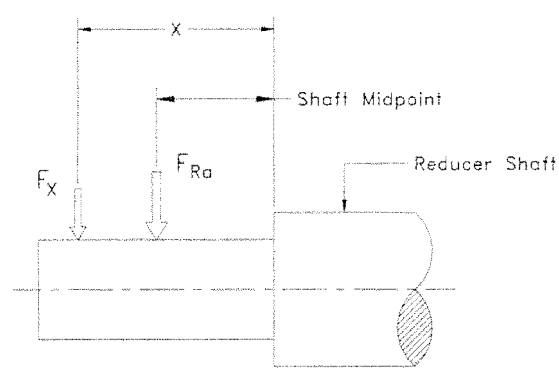

Frame Size	a lb-in.	b in.	c in.	d in.
S 37	0.53	0	4.67	3.88
S 47	1.18	0	5.12	4.13
S 57	1.89	0	5.91	4.72
S 67	2.69	0	7.24	5.87
S 77	4.66	0	8.82	7.05
S 87	14.87	0	11.08	8.72
S 97	22.48	0	12.85	10.09

Product Information Packet

VEM3538

.5HP,1735RPM,3PH,60HZ,56C,3513M,TEFC,F1

Copyright © All product information within this document is subject to Baldor Electric Company copyright © protection, unless otherwise noted.

Product Detail

Revision:	B	**Status:**	PRD/A	**Change #:**		**Proprietary:**	No
Type:	AC	**Prod Type:**	3513M	**Elec. Spec:**	35WGP862	**CD Diagram:**	CD0005
Enclosure	TEFC	**Mfg Plant:**		**Mech Spec:**	35J302	**Layout:**	35LYJ302
Frame:	56C	**Mounting:**	F1	**Poles:**	04	**Created Date:**	01-09-2008
Base:	N	**Rotation:**	R	**Insulation:**	F	**Eff. Date:**	08-13-2008
Leads:	9#18	**Literature:**		**Elec. Diagram:**		**Replaced By:**	

Nameplate NP1259L

CAT.NO.	VEM3538						
SPEC.	35J302P862						
HP	.5						
VOLTS	230/460						
AMP	1.54/.77						
RPM	1735						
FRAME	56C	**HZ**	60	**PH**	3		
SER.F.	1.25	**CODE**	K	**DES**	B	**CL**	F
NEMA-NOM-EFF	82.5	**PF**	74				
RATING	40C AMB-CONT						
CC		**USABLE AT 208V**	1.68				
DE	6205	**ODE**	6203				
ENCL	TEFC	**SN**					
	SFA 1.8/.9						

Parts List

Product ID	Description	Quantity	List Price
SA166631	SA 35J302P862	1.000	307.00
RA154997	RA 35J302P862	1.000	256.00
34FN3002B01	EXTERNAL FAN, PLASTIC, .637/.639 HUB W/	1.000	18.00
S/P107-000-001	SUPER E PROC'S-FS & WS PLTS-POLYREX EM G	1.000	
NS2512A01	INSULATOR, CONDUIT BOX X X	1.000	3.00
35CB3000SP	CONDUIT BOX, CAST, W/.88 DIA. LEAD HOLE	1.000	18.00
36GS1000SP	GASKET-CONDUIT BOX, .06 THICK #SV-330 LE	1.000	6.00
51XB1016A07	10-16 X 7/16 HXWSSLD SERTYB	2.000	3.00
11XW1032G06	10-32 X .38, TAPTITE II, HEX WSHR SLTD U	1.000	4.00
HW3001A01	D3019 BRASS WASHER(STIMP)	1.000	3.00
35EP3100M02	FREP TEFC 203 BRG W/O GRSR (RAISED FH MT	1.000	34.00
HW5100A03SP	WAVY WASHER (W1543-017)	1.000	3.00
35EP3300A33	SPL FACE MTD EP -ENCL-205 BRG	1.000	96.00
51XN1032A20	10-32 X 1 1/4 HX WS SL SR	2.000	3.00
XY1032A02	10-32 HEX NUT DIRECTIONAL SERRATION	4.000	3.00
51XB1214A16	12-14X1.00 HXWSSLD SERTYB	1.000	3.00
35FH4005A32SP	IEC FH NO GRSR W/3 HOLES - W/AUTOPHERETI	1.000	28.00
51XW1032A06	10-32 X .38, TAPTITE II, HEX WSHR SLTD S	3.000	4.00
35CB4514	35 LIPPED CB LID	1.000	3.00
36GS1001SP	GASKET, CONDUIT BOX LID, .06 THICK #SV-3	1.000	3.00
51XW0832A07	8-32 X .44, TAPTITE II, HEX WSHR SLTD SE	4.000	3.00
HW2501D13SP	KEY, 3/16 SQ X 1.375	1.000	3.00
HA7000A01	KEY RETAINER 7/8" DIA SHAFT	1.000	3.00
10XF0440S02	04-40 X 1/8 TYPE F HEX HD STAINLESS STIC	2.000	4.00

Parts List (continued)

Product ID	Description	Quantity	List Price
MJ1000A02	GREASE, POLYREX EM EXXON	0.050	12.00
MG1000Y03	WILCO 149-708 GOLD PAINT SUPER E	0.017	314.00
HA3100A12	THRUBOLT 10-32 X 7.375	4.000	3.00
LB1125C02	SUPER-E (STOCK CTN LABEL SUPER-E WITH FL	1.000	3.00
LC0005E01	CONN.DIA./WARNING LABEL (LC0005/LB1119)	1.000	3.00
NP1259L	STD LASER ENGRAVED, SUPER E,UL CSA CC, W	1.000	
35PA1066	PACKING GROUP COMBINED PRINT	1.000	16.00
PK3082	STYROFOAB CRADLE	1.000	3.00

Performance Data at 460V, 60Hz, 0.5HP (Typical performance - Not guaranteed values)

General Characteristics			
Full Load Torque:	1.52 LB-FT	**Start Configuration:**	DOL
No-Load Current:	0.483 Amps	**Break-Down Torque:**	6.3 LB-FT
Line-line Res. @ 25°C.:	36.2 Ohms A Ph / 0.0 Ohms B Ph	**Pull-Up Torque:**	3.55 LB-FT
Temp. Rise @ Rated Load:	20ºC	**Locked-Rotor Torque:**	4.82 LB-FT
Temp. Rise @ S.F. Load:	27ºC	**Starting Current:**	5.57 Amps

Load Characteristics

% of Rated Load:	**25**	**50**	**75**	**100**	**125**	**150**	**S.F.**
Power Factor:	34.0	52.0	65.0	74.0	80.0	85.0	80.0
Efficiency:	71.7	80.3	82.5	82.6	81.5	80.0	81.5
Speed:	1784.0	1770.0	1755.0	1737.0	1718.0	1697.0	1718.0
Line Amperes:	0.512	0.575	0.662	0.768	0.899	1.04	0.899

Performance Graph at 460V, 60Hz, 0.5HP (Typical performance - Not guaranteed values)

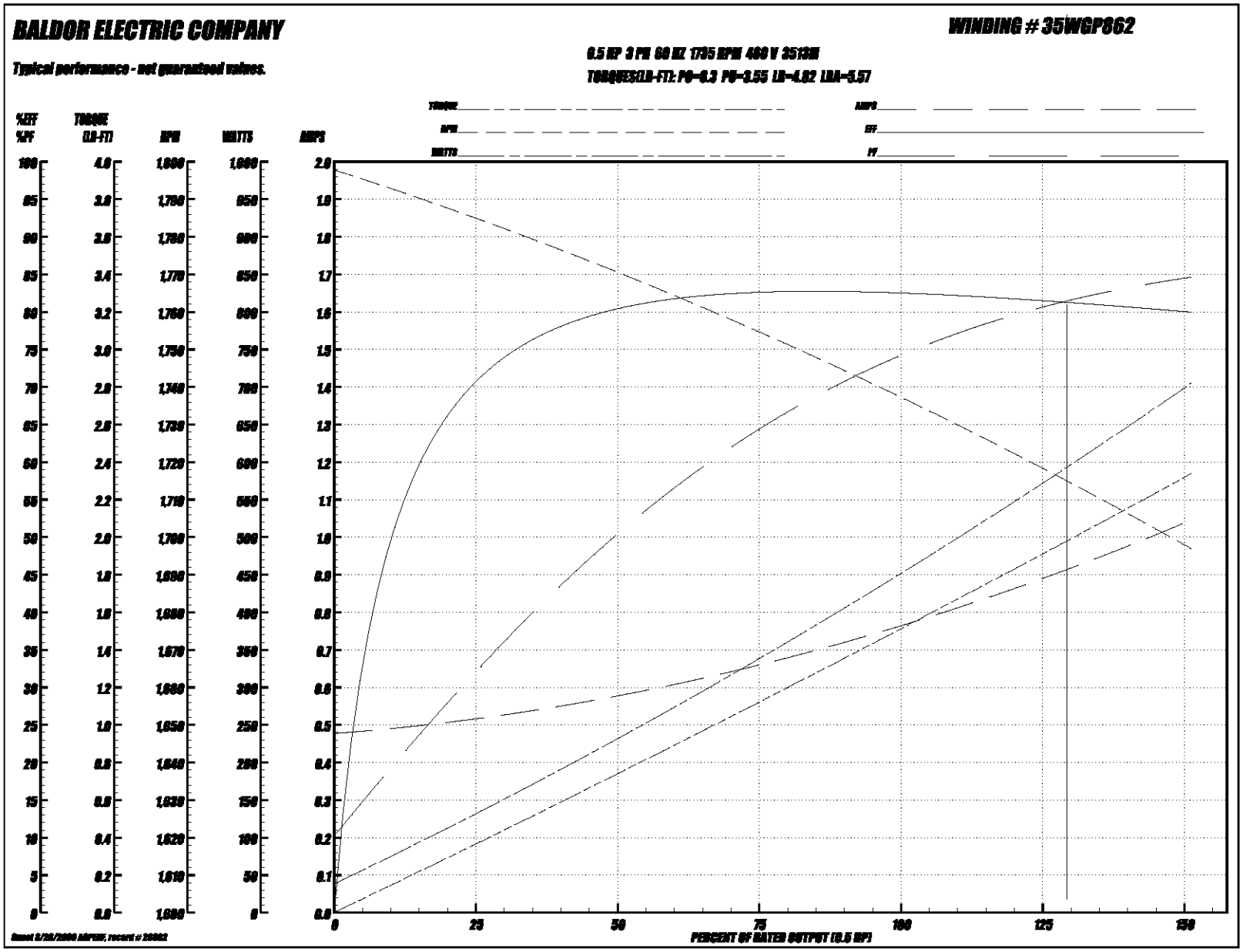

35J302

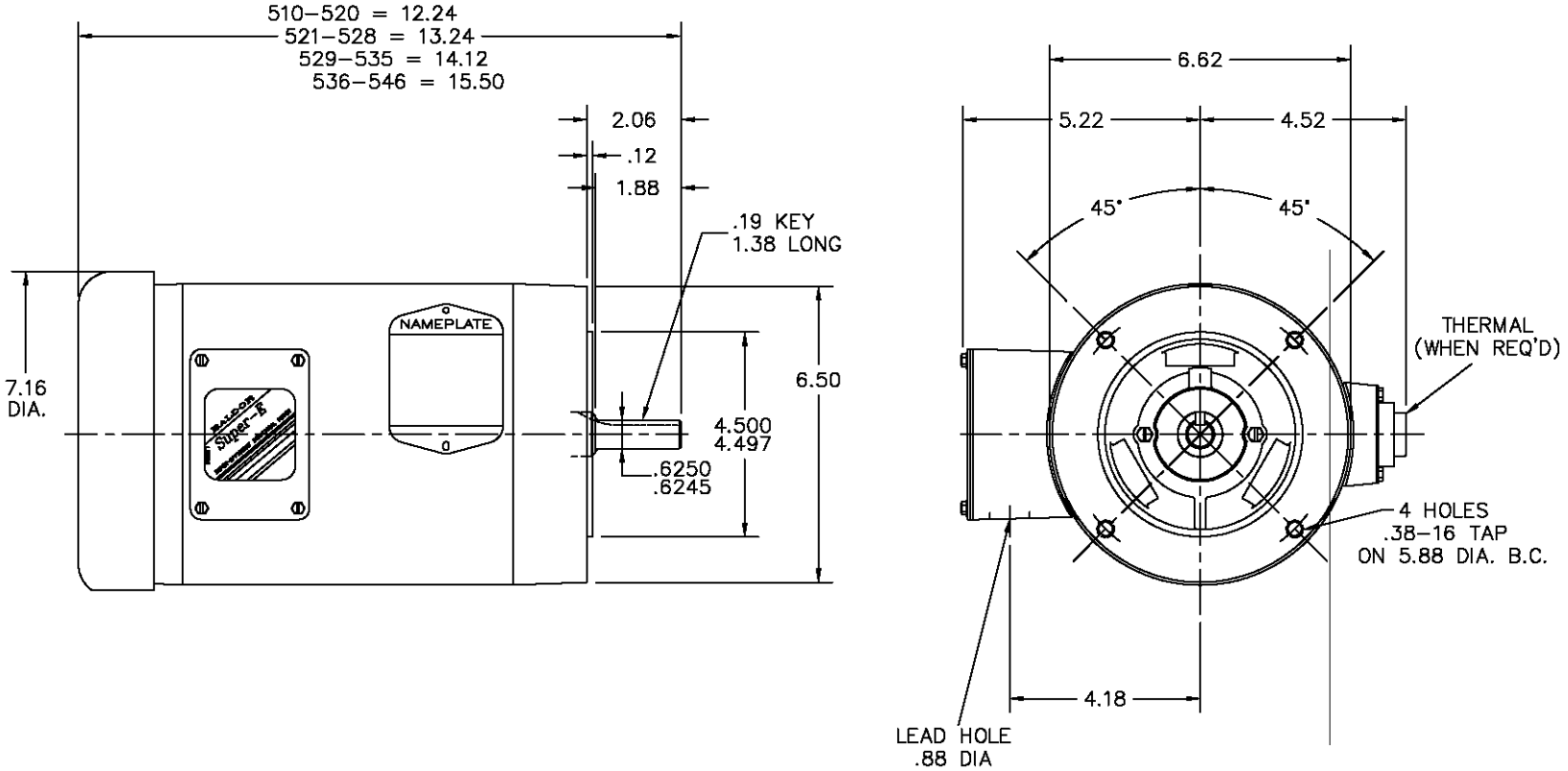

CUST. NAME		CUST. P.O.		CERTIFIED BY	MODEL		INSUL	AMB
H.P.	MTG	TYPE	R.P.M.	VOLTS	ENCL	PHASE	FREQ	FRAME
REMARKS:								
REV:	A	UPDATE AND LOAD TO CAD (SEE EC09)						
35J302	SCALE: .3	BY: JED	REVISED: 05/02/97					
	FILE: AAA00041631		TDR: 0117988					

BALDOR ELECTRIC Co.

VERT 56C TEFC 35M SUPER–E

35J302

CD0005

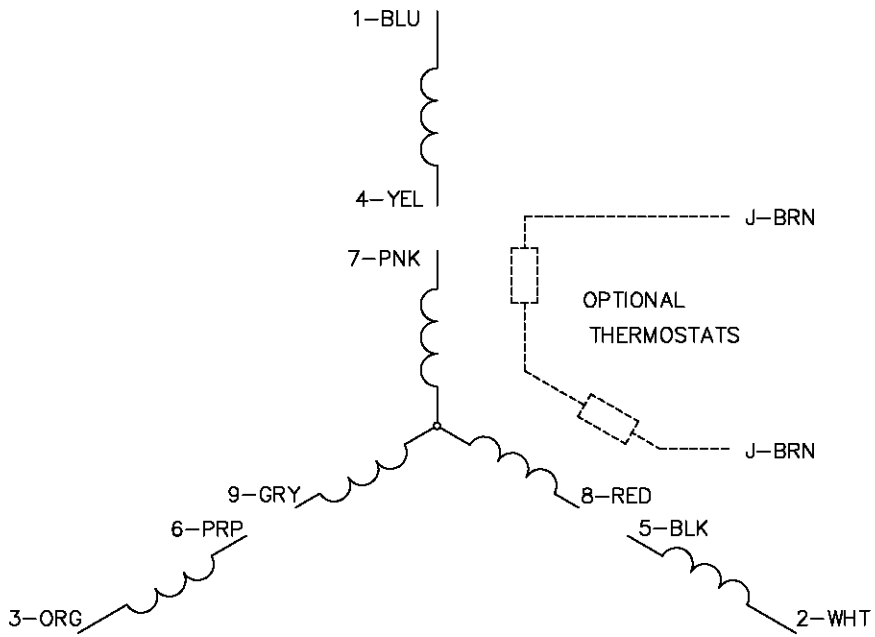

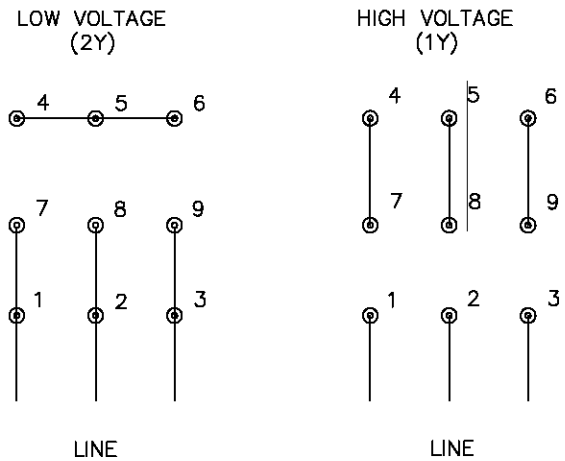

NOTES:

1. INTERCHANGE ANY TWO LINE LEADS TO REVERSE ROTATION.
2. OPTIONAL THERMOSTATS ARE PROVIDED WHEN SPECIFIED.
3. ACTUAL NUMBER OF INTERNAL PARALLEL CIRCUITS MAY BE A MULTIPLE OF THOSE SHOWN ABOVE.
4. LEAD COLORS ARE OPTIONAL. LEADS MUST ALWAYS BE NUMBERED AS SHOWN.

REV. DESC: REVISE TO SHOW OPTIONAL COLORS			
REV. LTR: E	BY: JLP	REVISED: 01/19/99 10:15	TDR: 0171435
CD0005		FILE: AAA00005140	MDL: –
		MTL: –	

BALDOR ELECTRIC Co.

3PH, DV, 9 LEADS

CD0005

WASTE▪TECH
a division of KUSTERS ZIMA

4.3

ANCHOR BOLT DETAILS

OPERATION & MAINTENANCE

WENATCHEE WWTP IMPROVEMENTS
PROJECT PO913
WENATCHEE, WA

SECTION 11092 – PERFORATED PLATE SCREENS
SECTION 11095 – SCREENINGS WASHER COMPACTOR

SCREEN ANCHOR BOLT DETAILS

Manufacturer:	Hilti
Type:	Chemical Anchor
Model:	HIT-RE 500
Capsule No.:	00241382
Threaded Rod Size:	5/8” – 16 NC; Chisel Point
Length:	7 ½”
Material:	316 Stainless Steel

SIDE SEAL ANCHOR BOLT DETAILS

Manufacturer:	Hilti
Type:	Chemical Anchor
Model:	HIT-RE 500
Capsule No.:	00241382
Threaded Rod Size:	⅜” – 16 NC; Chisel Point
Length:	4 ⅛”
Material:	316 Stainless Steel

HIT-RE 500-SD Epoxy Adhesive Anchoring System 4.2.6

4.2.6.1 Product Description

4.2.6.1	Product Description
4.2.6.2	Material Specifications
4.2.6.3	Strength Design
4.2.6.4	Technical Data
4.2.6.5	Installation Instructions
4.2.6.6	Ordering Information
4.2.6.7	Sample Calculations

Fastener Components

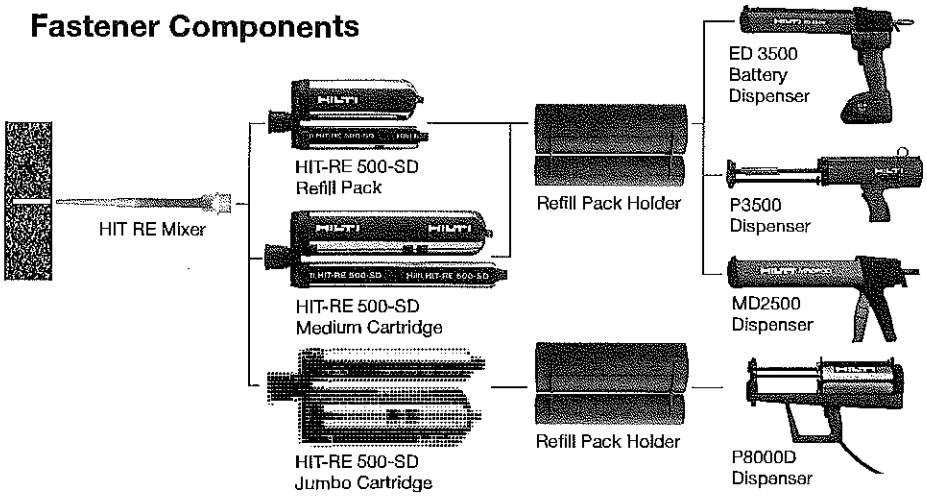

Listings/Approvals

ICC-ES (International Code Council)
ESR-2322

NSF/ANSI Std 61
certification for use in potable water

European Technical Approval
ETA-07/0260

Hilti HIT-RE 500-SD Adhesive Anchoring System is an injectable two-component epoxy adhesive. The two components are kept separate by means of a dual-cylinder foil pack attached to a manifold. The two components combine and react when dispensed through a static mixing nozzle attached to the manifold.

Hilti HIT-RE 500-SD Adhesive Anchoring System may be used with continuously threaded rod, Hilti HIS-N and HIS-RN internally-threaded inserts or deformed reinforcing bar installed in cracked or uncracked concrete. The primary components of the Hilti Adhesive Anchoring System are:

- Hilti HIT-RE 500-SD adhesive packaged in foil packs
- Adhesive mixing and dispensing equipment
- Equipment for hole cleaning and adhesive injection

Product Features

- Superior bond performance
- Seismic qualified per IBC®/IRC® 2006, IBC®/IRC® 2003, IBC®/IRC® 2000 and UBC® 1997 (ICC-ES AC308). Please refer to ESR-2322 (ICC-ES AC308) for Seismic Design Category A through F
- Use in diamond cored or pneumatic drilled holes and under water up to 165 feet (50 m)
- Meets requirements of ASTM C 881-90, Type IV, Grade 2 and 3, Class A, B, C except gel times
- Meets requirements of AASHTO specification M235, Type IV, Grade 3, Class A, B, C except gel times
- Mixing tube provides proper mixing, eliminates measuring errors and minimizes waste
- Contains no styrene; virtually odorless
- Extended temperature range from 41°F to 104°F (5°C to 40°C)
- Excellent weathering resistance; Resistance against elevated temperatures

Code Compliance

IBC®/IRC® 2006 (ICC-ES AC308)
IBC®/IRC® 2003 (ICC-ES AC308)
IBC®/IRC® 2000 (ICC-ES AC308)
UBC® 1997 (ICC-ES AC308)
LEED®: Credit 4.1-Low Emitting Materials

The Leadership in Energy and Environmental Design (LEED®) Green Building Rating system™ is the nationally accepted benchmark for the design, construction and operation of high performance green buildings.

Components

HAS Threaded Rods

HIS Internally Threaded Inserts

Rebar (supplied by contractor)

4.2.6 HIT-RE 500-SD Epoxy Adhesive Anchoring System

Guide Specifications

Master Format Section:

03250 (Concrete accessories)

Related Sections:

03200 (Concrete Reinforcing-Reinforcing Accessories)
05050 (Metal Fabrication)
05120 (Structural Steel; Masonry Accessories)

Injectable adhesive shall be used for installation of all reinforcing steel dowels or threaded anchor rods and inserts into new or existing concrete. Adhesive shall be furnished in side-by-side refill packs which keep component A and component B separate. Side-by-side packs shall be designed to compress during use to minimize waste volume. Side-by-side packs shall also be designed to accept static mixing nozzle which thoroughly blends component A and component B and allows injection directly into drilled hole. Only injection tools and static mixing nozzles as recommended by manufacturer shall be used. Manufacturer's instructions shall be followed. Injection adhesive shall be formulated to include resin and hardener to provide optimal curing speed as well as high strength and stiffness. Typical curing time at 68°F (20°C) shall be approximately 12 hours.

Injection adhesive shall be HIT-RE 500-SD, as furnished by Hilti.

Anchor Rods shall be furnished with chamfered ends so that either end will accept a nut and washer. Alternatively, anchor rods shall be furnished with a 45 degree chisel point on one end to allow for easy insertion into the adhesive-filled hole. Anchor rods shall be manufactured to meet the following requirements:

1. ISO 898 Class 5.8
2. ASTM A 193, Grade B7 (high strength carbon steel anchor);
3. AISI 304 or AISI 316 stainless steel, meeting the requirements of ASTM F 593 (condition CW).

Special order length HAS Rods may vary from standard product.

Nuts and Washers of other grades and styles having specified proof load stresses greater than the specified grade and style are also suitable. Nuts must have specified proof load stresses equal to or greater than the minimum tensile strength of the specified threaded rod.

4.2.6.2 Material Specifications

Bond Strength ASTM C882-91[1] 2 day cure 7 day cure	 12.4 MPa 12.4 MPa	 1800 psi 1800 psi
Compressive Strength ASTM D-695-96[1]	82.7 MPa	12,000 psi
Compressive Modulus ASTM D-695-96[1]	1493 MPa	0.22 x 10^6 psi
Tensile Strength 7 day ASTM D-638-97	43.5 MPa	6310 psi
Elongation at break ASTM D-638-97	2.0%	2.0%
Heat Deflection Temperature ASTM D-648-95	63°C	146°F
Absorption ASTM D-570-95	0.06%	0.06%
Linear Coefficient of Shrinkage on Cure ASTM D-2566-86	0.004	0.004
Electrical resistance DIN IEC 93 (12.93)	6.6 x 10^{13} Ω/m	1.7 x 10^{12}Ω/in.

1 Minimum values obtained as a result of three cure temperatures (23°, 40°, 60°F)

4.2.6 HIT-RE 500-SD Epoxy Adhesive Anchoring System

Table 2 — TENSILE PROPERTIES OF COMMON CARBON STEEL THREADED ROD MATERIALS[1]

THREADED ROD SPECIFICATION		Minimum specified ultimate strength f_{uta}	Minimum specified yield strength 0.2% offset f_{ya}	f_{uta}/f_{ya}	Elongation, min. %[5]	Reduction of Area, min. %	Specification for nuts[6]
ASTM A 193[2] Grade B7 ≤ 2-1/2 in. (≤ 64 mm)	psi (MPa)	**125,000** (862)	**105,000** (724)	1.19	16	50	ASTM A 563 Grade DH
ASTM F 568M[3] Class 5.8 M5 (1/4 in.) to M24 (1 in.) (equivalent to ISO 898-1)	psi (MPa)	**72,500** (500)	**58,000** (400)	1.25	10	35	DIN 934 (8-A2K) ASTM A 563 Grade DH[7]
ISO 898-1[4] Class 8.8	MPa (psi)	**800** (116,000)	**640** (92,800)	1.25	12	52	DIN 934 (8-A2K)

1 Hilti HIT-RE 500-SD may be used in conjunction with all grades of continuously threaded carbon steel rod (all-thread) that conform to the code and that have thread characteristics comparable with ANSI B1.1 UNC Coarse Thread Series or ANSI B1.13M M Profile Metric Thread Series. Values for threaded rod types and associated nuts supplied by Hilti are provided here.

2 Standard Specification for Alloy-Steel and Stainless Steel Bolting Materials for High-Temperature Service

3 Standard Specification for Carbon and Alloy Steel Externally Threaded Metric Fasteners

4 Mechanical properties of fasteners made of carbon steel and alloy steel — Part 1: Bolts, screws and studs

5 Based on 2-in. (50 mm) gauge length except for A193 and A449, which are based on a gauge length of 4D and ISO 898 which is based on 5D.

6 Nuts of other grades and styles having specified proof load stresses greater than the specified grade and style are also suitable. Nuts must have specified proof load stresses equal to or greater than the minimum tensile strength of the specified threaded rod.

7 Nuts for fractional rods.

Table 3 — TENSILE PROPERTIES OF COMMON STAINLESS STEEL THREADED ROD MATERIALS[1]

THREADED ROD SPECIFICATION		Minimum specified ultimate strength f_{uta}	Minimum specified yield strength 0.2% offset f_{ya}	f_{uta}/f_{ya}	Elongation, min. %	Reduction of Area, min. %	Specification for nuts[4]
ASTM F 593[2] CW1 (316) 1/4 to 5/8 in.	psi (MPa)	**100,000** (689)	**65,000** (448)	1.54	20	-	F 594
ASTM F 593[2] CW2 (316) 3/4 to 1-1/2 in.(MPa)	psi (MPa)	**85,000** (586)	**45,000** (310)	1.89	25	-	F 594
ISO 3506-1[3] A4-70 M8 – M24	MPa (psi)	**700** (101,500)	**450** (65,250)	1.56	40	-	ISO 4032
ISO 3506-1[3] A4-50 M27 – M30	MPa (psi)	**500** (72,500)	**210** (30,450)	2.00	40	-	ISO 4032

1 Hilti HIT-RE 500-SD may be used in conjunction with all grades of continuously threaded stainless steel rod (all-thread) that conform to the code and that have thread characteristics comparable with ANSI B1.1 UNC Coarse Thread Series or ANSI B1.13M M Profile Metric Thread Series. Values for threaded rod types and associated nuts supplied by Hilti are provided here.

2 Standard Steel Specification for Stainless Steel Bolts, Hex Cap Screws, and Studs

3 Mechanical properties of corrosion-resistant stainless steel fasteners – Part 1: Bolts, screws and studs

4 Nuts of other grades and styles having specified proof load stresses greater than the specified grade and style are also suitable. Nuts must have specified proof load stresses equal to or greater than the minimum tensile strength of the specified threaded rod. Differing grades of steel may affect corrosion resistance.

4.2.6 HIT-RE 500-SD Epoxy Adhesive Anchoring System

Table 7 — STEEL DESIGN INFORMATION FOR FRACTIONAL THREADED ROD[1]

DESIGN INFORMATION		Symbol	Units	Nominal rod diameter (in.)						
				3/8	1/2	5/8	3/4	7/8	1	1-1/4
Rod O.D.		d	**in.** (mm)	**0.375** (9.5)	**0.5** (12.7)	**0.625** (15.9)	**0.75** (19.1)	**0.875** (22.2)	**1** (25.4)	**1.25** (31.8)
Rod effective cross-sectional area		A_{se}	**in.^{2}** (mm^2)	**0.0775** (50)	**0.1419** (92)	**0.2260** (146)	**0.3345** (216)	**0.4617** (298)	**0.6057** (391)	**0.9691** (625)
ISO 898-1 Class 5.8[2]	Nominal strength as governed by steel strength	N_{sa}	**lb** (kN)	**5,619** (25.0)	**10,288** (45.8)	**16,385** (72.9)	**24,251** (107.9)	**33,472** (148.9)	**43,912** (195.3)	**70,258** (312.5)
		V_{sa}	**lb** (kN)	**2,809** (12.5)	**6,173** (27.5)	**9,831** (43.7)	**14,550** (64.7)	**20,083** (89.3)	**26,347** (117.2)	**42,155** (187.5)
	Reduction for seismic shear	$\alpha_{V,seis}$	-				0.70			
	Strength reduction factor ϕ for tension[2]	ϕ	-				0.65			
	Strength reduction factor ϕ for shear[2]	ϕ	-				0.60			
ASTM A 193 B7[2]	Nominal strength as governed by steel strength	N_{sa}	**lb** (kN)	**9,687** (43.1)	**17,737** (78.9)	**28,249** (125.7)	**41,812** (186.0)	**57,711** (256.7)	**75,711** (336.8)	**121,135** (538.8)
		V_{sa}	**lb** (kN)	**4,844** (21.5)	**10,642** (47.3)	**16,950** (75.4)	**25,087** (111.6)	**34,627** (154.0)	**45,426** (202.1)	**72,681** (323.3)
	Reduction for seismic shear	$\alpha_{V,seis}$	-				0.70			
	Strength reduction factor ϕ for tension[2]	ϕ	-				0.75			
	Strength reduction factor ϕ for shear[2]	ϕ	-				0.65			
ASTM F593, CW Stainless[2]	Nominal strength as governed by steel strength	N_{sa}	**lb** (kN)	**7,750** (34.5)	**14,190** (63.1)	**22,600** (100.5)	**28,432** (126.5)	**39,244** (174.6)	**51,483** (229.0)	**82,372** (366.4)
		V_{sa}	**lb** (kN)	**3,875** (17.2)	**8,514** (37.9)	**13,560** (60.3)	**17,059** (75.9)	**23,546** (104.7)	**30,890** (137.4)	**49,423** (219.8)
	Reduction for seismic shear	$\alpha_{V,seis}$	-				0.70			
	Strength reduction factor ϕ for tension[2]	ϕ	-				0.75			
	Strength reduction factor ϕ for shear[2]	ϕ	-				0.65			

For SI: 1 inch = 25.4 mm, 1 lbf = 4.448 N, 1 psi = 0.006897 MPa

For pound-inch units: 1 mm = 0.03937 inches, 1 N = 0.2248 lbf, 1 MPa = 145.0 psi

1 Values provided for common rod material types based on published strengths and calculated in accordance with ACI 318-05 Eq. (D-3) and Eq. (D-20). Other material specifications are admissible. Use nuts and washers appropriate for the rod strength. Differing grades of steel may affect corrosion resistance.

2 For use with the load combinations of ACI 318-05 Section 9.2. See ACI 318-05 Section D.4.4.

HIT-RE 500-SD Epoxy Adhesive Anchoring System 4.2.6

Table 8 — CONCRETE BREAKOUT DESIGN INFORMATION FOR FRACTIONAL THREADED ROD IN HOLES DRILLED WITH A HAMMER DRILL AND CARBIDE BIT[1]

DESIGN INFORMATION	Symbol	Units	Nominal rod diameter (in.)						
			3/8	1/2	5/8	3/4	7/8	1	1-1/4
Effectiveness factor for cracked concrete	$k_{c,cr}$	**in-lb** (SI)	**17** (7.1)						
Effectiveness factor for un-cracked concrete	$k_{c,uncr}$	**in-lb** (SI)	**24** (10)						
Min. anchor spacing	s_{min}	**in.** (mm)	**1-7/8** (48)	**2-1/2** (64)	**3-1/8** (79)	**3-3/4** (95)	**4-3/8** (111)	**5** (127)	**6-1/4** (159)
Min. edge distance	c_{min}	**in.** (mm)	**1-7/8** (48)	**2-1/2** (64)	**3-1/8** (79)	**3-3/4** (95)	**4-3/8** (111)	**5** (127)	**6-1/4** (159)
Minimum member thickness	h_{min}	**in.** (mm)	h_{ef} + **1-1/4** (h_{ef} + 30)		$h_{ef} + 2d_o$				
Critical edge distance — splitting (for un-cracked concrete)	c_{ac}	-	See ***Strength Design*** provisions above						
Strength reduction factor for tension, concrete failure modes, Condition B[2]	ϕ	-	0.65						
Strength reduction factor for shear, concrete failure modes, Condition B[2]	ϕ	-	0.70						

For SI: 1 inch = 25.4 mm, 1 lbf = 4.448 N, 1 psi = 0.006897 MPa

For pound-inch units: 1 mm = 0.03937 inches, 1 N = 0.2248 lbf, 1 MPa = 145.0 psi

1 For additional setting information, see installation instructions.

2 Values provided for post-installed anchors with category as determined from ACI 355.2 given for Condition B without supplemenlary reinforcement.

4.2.6 HIT-RE 500-SD Epoxy Adhesive Anchoring System

Table 9 — BOND STRENGTH DESIGN INFORMATION FOR FRACTIONAL THREADED ROD IN HOLES DRILLED WITH A HAMMER DRILL AND CARBIDE BIT[1,4]

DESIGN INFORMATION		Symbol	Units	Nominal rod diameter (in.)						
				3/8	1/2	5/8	3/4	7/8	1	1-1/4
Temperature range A[3]	Characteristic bond strength and minimum anchor embedment in cracked concrete	$\tau_{k,cr}$	psi (N/mm²)	1,092 (7.5)	1,073 (7.4)	1,044 (7.2)	999 (6.9)	917 (6.3)	852 (5.9)	732 (5.0)
		$h_{ef,min}$	in. (mm)	2.43 (62)	2.81 (71)	3.14 (80)	3.44 (87)	3.71 (94)	4.0 (102)	5.0 (127)
	Characteristic bond strength and minimum anchor embedment in un-cracked concrete	$\tau_{k,uncr}$	psi (N/mm²)	2,283 (15.7)	2,236 (15.4)	2,142 (14.8)	2,067 (14.3)	2,002 (13.8)	1,946 (13.4)	1,862 (12.8)
		$h_{ef,min}$	in. (mm)	2.43 (62)	2.81 (71)	3.14 (80)	3.44 (87)	3.71 (94)	4.0 (102)	5.0 (127)
Temperature range B[3]	Characteristic bond strength and minimum anchor embedment in cracked concrete[2]	$\tau_{k,cr}$	psi (N/mm²)	444 (3.1)	431 (3.0)	379 (2.6)	345 (2.4)	316 (2.2)	294 (2.0)	260 (1.8)
		$h_{ef,min}$	in. (mm)	1.73 (44)	2.20 (56)	3.61 (66)	3.01 (76)	3.50 (89)	4.0 (102)	5.0 (127)
	Characteristic bond strength and minimum anchor embedment in un-cracked concrete[2]	$\tau_{k,uncr}$	psi (N/mm²)	788 (5.4)	772 (5.3)	739 (5.1)	714 (4.9)	691 (4.8)	672 (4.6)	643 (4.4)
		$h_{ef,min}$	in. (mm)	1.73 (44)	2.20 (56)	3.61 (66)	3.01 (76)	3.50 (89)	4.0 (102)	5.0 (127)
Permissible installation conditions	Dry concrete	ϕ_d	-	0.65	0.65	0.65	0.65	0.55	0.55	0.55
	Water-saturated concrete	ϕ_{ws}	-	0.55	0.55	0.45	0.45	0.45	0.45	0.45
		κ_{ws}	-	1.0	1.0	1.0	1.0	1.0	0.99	0.94
	Water-filled hole	ϕ_{wf}	-	0.45	0.45	0.45	0.45	0.45	0.45	0.45
		κ_{wf}	-	1.00	1.00	0.96	0.91	0.87	0.84	0.79
	Underwater application	ϕ_{uw}	-	0.45	0.45	0.45	0.45	0.45	0.45	0.45
		κ_{uw}	-	0.95	0.94	0.94	0.93	0.92	0.92	0.91

For SI: 1 inch = 25.4 mm, 1 lbf = 4.448 N, 1 psi = 0.006897 MPa

For pound-inch units: 1 mm = 0.03937 inches, 1 N = 0.2248 lbf, 1 MPa = 145.0 psi

1 Bond strength values correspond to concrete compressive strength range 2,500 psi ≤ f'c ≤ 4,500 psi. For 4,500 psi ≤ f'c ≤ 6,500 psi, tabulated characteristic bond strength may be increased by 6%. For 6,500 psi ≤ f'c ≤ 8,000 psi, tabulated characteristic bond strength may be increased by 10%.

2 Bond strength values are for sustained loads including dead and live loads. For short-term loads including wind and seismic, bond strengths may be increased 40%.

3 Temperature range A: Max. short term temperature = 110°F (43°C), max. long term temperature = 80°F (26°C).

Temperature range B: Max. short term temperature = 162°F (72°C), max. long term temperature = 110°F (43°C).

Short term elevated concrete temperatures are those that occur over brief intervals, e.g., as a result of diurnal cycling. Long term concrete temperatures are roughly constant over significant periods of time.

4 For structures assigned to SDC C, D, E or F, bond strength values shall be multiplied by $\alpha_{N,seis}$ = 0.65.

HIT-RE 500-SD Epoxy Adhesive Anchoring System 4.2.6

Table 10 — BOND STRENGTH DESIGN INFORMATION FOR FRACTIONAL THREADED ROD IN HOLES DRILLED WITH A CORE DRILL[1,4]

DESIGN INFORMATION		Symbol	Units	Nominal rod diameter (in.)						
				3/8	1/2	5/8	3/4	7/8	1	1-1/4
Temperature range A[3]	Characteristic bond strength and minimum anchor embedment in un-cracked concrete	$\tau_{k,uncr}$	**psi** (N/mm²)	**1,740** (12.0)	**1,703** (11.7)	**1,553** (10.7)	**1,441** (9.9)	**1,356** (9.4)	**1,282** (8.8)	**1,169** (8.1)
		$h_{ef,min}$	**in.** (mm)	**2.43** (62)	**2.81** (71)	**3.14** (80)	**3.44** (87)	**3.71** (94)	**4.0** (102)	**5.0** (127)
Temperature range B[3]	Characteristic bond strength and minimum anchor embedment in un-cracked concrete[2]	$\tau_{k,uncr}$	**psi** (N/mm²)	**601** (4.1)	**588** (4.1)	**536** (3.7)	**497** (3.4)	**468** (3.2)	**442** (3.1)	**404** (2.8)
		$h_{ef,min}$	**in.** (mm)	**1.57** (40)	**2.0** (51)	**2.5** (64)	**3.0** (76)	**3.5** (89)	**4.0** (102)	**5.0** (127)
Permissible installation conditions	Dry concrete	ϕ_d	-	0.65	0.65	0.55	0.55	0.55	0.45	0.45
	Water-saturated concrete	ϕ_{ws}	-	0.55	0.55	0.45	0.45	0.45	0.45	0.45
		κ_{ws}	-	1.00	1.00	1.00	1.00	1.00	0.95	0.88

For SI: 1 inch = 25.4 mm, 1 lbf = 4.448 N, 1 psi = 0.006897 MPa

For pound-inch units: 1 mm = 0.03937 inches, 1 N = 0.2248 lbf, 1 MPa = 145.0 psi

1 Bond streogth values correspond to concrete compressive strength range 2,500 psi ≤ f'c ≤ 4,500 psi. For 4,500 psi ≤ f'c ≤ 6,500 psi, tabulated characteristic bond strength may be increased by 6%. For 6,500 psi ≤ f'c ≤ 8,000 psi, tabulated characteristic bond may be increased by 10%.

2 Characteristic bond strengths are for sustained loads including dead and live loads. For short-term loads including wind and seismic, bond strengths may be increased 40%.

3 Temperature range A: Max. short term temperature = 110°F (43°C), max. long term temperature = 80°F (26°C).

Temperature range B: Max. short term temperature = 162°F (72°C), max. long term temperature = 110°F (43°C).

Short term elevated concrete temperatures are those that occur over brief intervals, e.g., as a result of diurnal cycling. Long term concrete temperatures are roughly constant over significant periods of time.

4 Bond strength values applicable to SDC A and B only.

4.2.6 HIT-RE 500-SD Epoxy Adhesive Anchoring System

4.2.6.5 Installation Instructions

Adhesive anchoring system for fastenings in normal weight concrete

Prior to use of product follow instructions for use and recommended safety precautions.

- Check expiration date: See expiration date imprint on foilpack manifold. (Month/Year). Do not use expired product.
- Foil pack temperature: Must be between 41°F and 104°F (5°C - 40°C) when in use.
- Base material temperature at time of installation: Must be between 41°F and 110°F (5°C - 43°C).
- Instructions for transport and storage: Keep in a cool, dry and dark place between 41°F and 77°F (5°C - 25°C).
- Material Safety Data Sheet: Review the MSDS before use.

Installation Instructions: Follow the pictograms 1-14 for the sequence of operations and refer to tables 1-3 for setting details. For any application not covered by this document (e.g. "h_{ef}" beyond values specified in setting details), contact Hilti.

Installation flow Chart

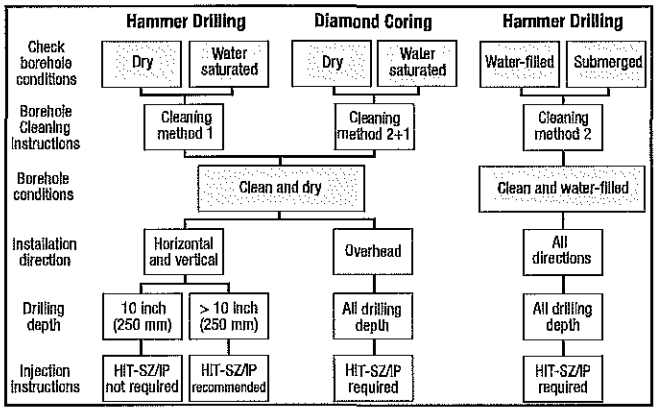

1. Drill hole normal to the surface with a hammer drill set in rotation-hammer mode using an appropriately sized carbide drill bit, or with a core rig and an appropriately sized diamond core bit, to the required embedment depth. See tables describing setting details. **(Drill bits must conform to ANSI B212-1994.)**

2-4. **Clean hole:** Cleaning method has to be decided based on drilling method and borehole conditions (see flow chart above). Just before setting an anchor/rebar, the borehole must be free of dust and debris by one of the following methods:

Method 1 — for dry or water saturated concrete (refer to pictograms):

- **Blow** from the back of the borehole with oil-free compressed air (min. 90psi at 3.5 CFM (6 bar at 6 m³/h)) fully retracting the air extension 2 times until return air stream is free of noticeable dust.
- **Brush 2 times** with the specified brush size (brush Ø = borehole Ø) by inserting the round steel brush to the back of the borehole in a twisting motion and removing it. The brush should resist insertion into the borehole — if not, the brush is too small and must be replaced with the proper brush diameter.
- **Blow** again with compressed air 2 times until return air stream is free of noticeable dust.

Method 2 — for water filled boreholes, submerged concrete or diamond cored boreholes:

- **Flush hole 2 times** by inserting a water hose (water-line pressure) to the back of the borehole until water runs clear.
- **Brush 2 times** with the specified brush size (brush Ø = borehole Ø) by inserting the round steel brush to the back of the borehole with a twisting motion and removing it. The brush should resist insertion into the borehole — if not, the brush is too small and must be replaced with the proper brush diameter.
- **Flush again** 2 times until water runs clear.
- **Important!** For **diamond cored boreholes** and **if a dry borehole is required for injection (e.g. water flows into cleaned borehole),** continue with borehole cleaning as described by methode 1. **Remove all standing water** completely (i.e. vacuum, compressed air or other appropriate procedure). To attain a dried borehole, a Hilti HIT-DL air nozzle attachment is recommended for borehole depth up to 10 inch (250 mm) and required for borehole depth > 10 inch (250 mm).

The borehole must be free of dust, debris, ice, oil, grease and other contaminants prior to adhesive injection. Inadequate borehole cleaning = poor load values

5. **Insert foil pack in foil pack holder.** Never use damaged foil packs and/or damaged or unclean foil pack holders.

6. **Tightly attach Hilti HIT-RE-M mixer to foil pack manifold.** Attach new mixer prior to dispensing a new foil pack (snug fit). Do not modify the mixer in any way. Make sure the mixing element is in the mixer. Use only the mixer supplied with the adhesive.

7. **Insert foil pack holder with foil pack into HIT-dispenser.** Push release trigger, retract plunger and insert foil pack holder into the appropriate Hilti dispenser.

8. **Discard initial adhesive.** The foil pack opens automatically as dispensing is initiated. Depending on the size of the foil pack an initial amount of adhesive has to be discarded. See pictogram 8 for discard quantities. If a new mixer is installed onto a previously-opened foil pack, the first trigger pulls must also be discarded as described above. For each new foil pack a new mixer must be used.

9-10. **Inject adhesive from the back of the borehole without forming air voids:**

Verify if borehole conditions have changed (e.g. water in the borehole) after cleaning. If yes, repeat cleaning according points 2 - 4.

- **Inject** the adhesive starting at the back of the borehole (use the extension for deep boreholes), slowly withdraw the mixer with each trigger pull. Fill holes approximately 2/3 full, or as required to ensure that the annular gap between the anchor/rebar and the concrete is completely filled with adhesive along the embedment length. After injection is completed, depressurize the dispenser by pressing the release trigger. This will prevent further adhesive discharge from the mixer.
- **Piston plug injection — HIT-SZ/IP recommended for borehole depth > 10 inch/250 mm. For water filled boreholes or submerged concrete, and overhead installation the piston plugs are required. Assemble HIT-RE-M mixer, extension(s) and appropriately sized piston plug** HIT-SZ/IP. Insert piston plug to back of the borehole and

HIT-RE 500-SD Epoxy Adhesive Anchoring System 4.2.6

inject adhesive as described in the injection method above. During injection the piston plug will be naturally extruded out of the borehole by the adhesive pressure.

11. **Insert anchor/rebar into borehole.** Mark and set anchor/rebar to the required embedment depth. Before use, verify that the anchor/rebar is dry and free of oil and other contaminants. To ease installation, anchor/rebar may be slowly twisted as they are inserted. After installing an anchor/rebar, the annular gap must be completely filled with adhesive. If the borehole is not completely filled along the embedment depth the installation should be rejected. Hilti should be contacted for further information.

    Attention! For overhead applications take special care when inserting the anchor/rebar. Excess adhesive will be forced out of the borehole — take appropriate steps to prevent it from falling onto the installer. Position the anchor/rebar and secure it from moving/falling during the curing time (e.g. wedges). Observe the gel time "t gel", which varies according to temperature of base material. Minor adjustments to the anchor/rebar position may be performed during the gel time. See table.

12. **Do not disturb the anchor/rebar** once the gel time **"t gel"** has elapsed until **"t cure, ini"** has passed.

13. **Preparation work may continue for rebar applications.** Between **"t cure, ini"** and **"t cure, full"** the adhesive has a limited load bearing capacity, do not apply a torque or load on the anchor/rebar during this time.

14. **Apply load/torque after "t cure, full"** has passed, and the fixture to be attached has been positioned.

Partly used foil packs must be used up within **four weeks.** Leave the mixer attached to the foil pack manifold and store under the recommended storage conditions. If reused, attach a new mixer and discard the initial quantity of anchor adhesive as described by point 8.

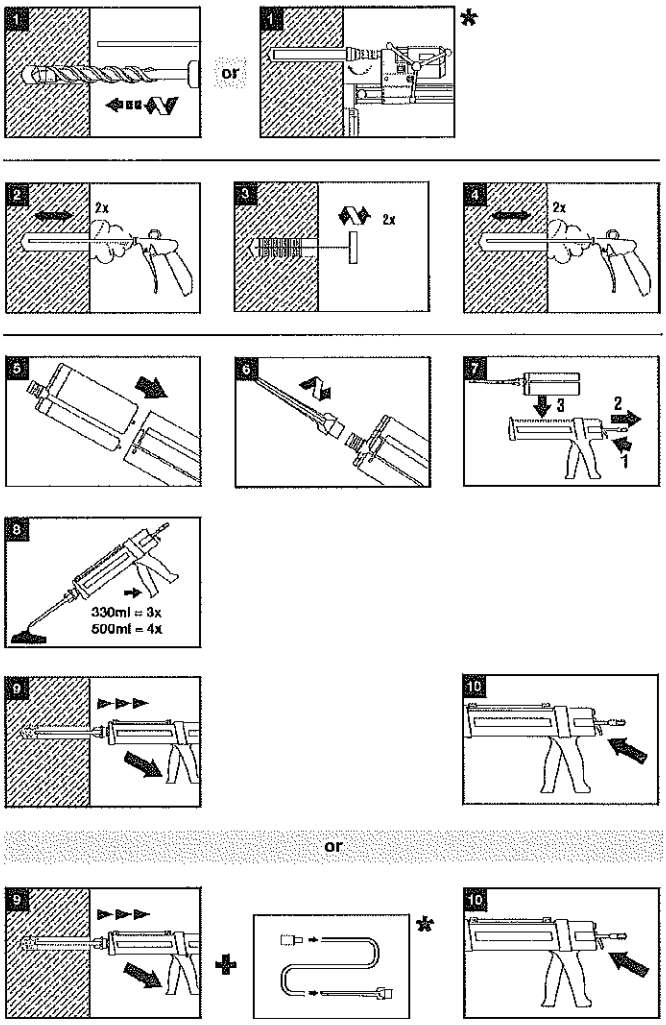

*) Please refer to technical literature (approvals, setting instructions) for detail.

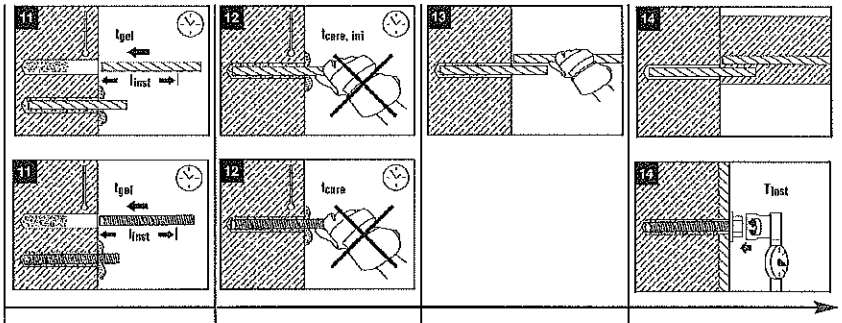

°F	°C	twork / tgel	tcure, ini	tcure, full	Time
41	5	2.5 hrs	18 hrs	72 hrs	
50	10	2 hrs	12 hrs	48 hrs	
59	15	1.5 hrs	8 hrs	24 hrs	
68	20	30 min	6 hrs	12 hrs	
86	30	20 min	4 hrs	8 hrs	
104	40	12 min	2 hrs	4 hrs	

4.2.6 HIT-RE 500-SD Epoxy Adhesive Anchoring System

Table 1 — Setting Details of Hilti HIT-RE 500-SD with threaded rod

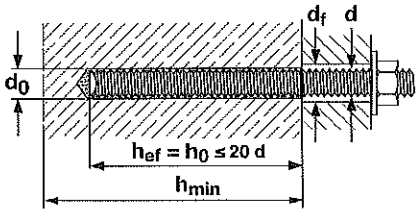

d		d_o	h_{ef} min-max		T_{inst}		d_f	h_{min}
[inch]	[mm]	[inch]	[inch]	[mm]	[ft-lb]	[Nm]	[inch]	[inch]
3/8	9.5	7/16	1-1/2 – 7 1/2	40 – 191	15	20	7/16	h_{ef} + 1-1/4 (30 mm)
1/2	12.7	9/16	2 – 10	51 – 254	30	41	9/16	
5/8	15.9	3/4	2-1/2 – 12-1/2	64 – 318	60	81	11/16	$h_{ef} + 2\ d_0$
3/4	19.1	7/8	3 – 15	76 – 381	100	136	13/16	
7/8	22.2	1	3-1/2 – 17-1/2	89 – 445	125	169	15/16	
1	25.4	1-1/8	4 – 20	102 – 508	150	203	1-1/8	
1-1/4	31.8	1-3/8	5 – 25	127 – 635	200	271	1-3/8	
[mm]		[mm]	[Nm]		[Nm]		[mm]	[mm]
M8		10	40 – 160		10		9	h_{ef} + 30
M10		12	41 – 200		20		12	
M12		14	48 – 240		40		14	
M16		18	64 – 320		80		18	$h_{ef} + 2\ d_0$
M20		24	80 – 400		150		22	
M24		28	96 – 480		200		26	
M27		30	108 – 540		270		30	
M30		35	120 – 600		300		33	

Table 2 — Setting Details of Hilti HIT-RE 500-SD with HIS-N and HIS-RN Inserts

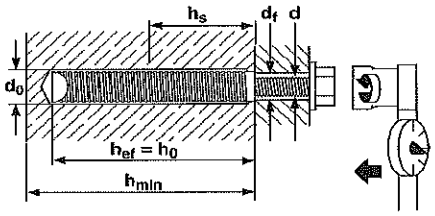

d		d_o	h_{ef}		T_{inst}		d_f	h_{min}	
[inch]	[mm]	[inch]	[inch]	[mm]	[ft-lb]	[Nm]	[inch]	[inch]	[mm]
3/8	9.5	11/16	4 3/8	110	15	20	7/16	5-3/4	150
1/2	12.7	7/8	5	125	30	41	9/16	6-3/4	170
5/8	15.9	1-1/8	6 3/4	170	60	81	11/16	9	230
3/4	19.1	1-1/4	8-1/8	205	100	136	13/16	10-3/4	270
[mm]		[mm]	[mm]		[Nm]		[mm]	[mm]	
M8		14	90		10		9	120	
M10		18	110		20		12	150	
M12		22	125		40		14	170	
M16		28	170		80		18	230	
M20		32	205		150		22	270	

4.2.6 HIT-RE 500-SD Epoxy Adhesive Anchoring System

4.2.6.6 Ordering Information

HIT-RE 500-SD Epoxy Adhesive Anchor System

- First adhesive anchor to comply with the latest building code offering designers a strength design solution for anchors and rebar
- Enables threaded rod and dowelling applications in seismic design conditions under the latest building codes

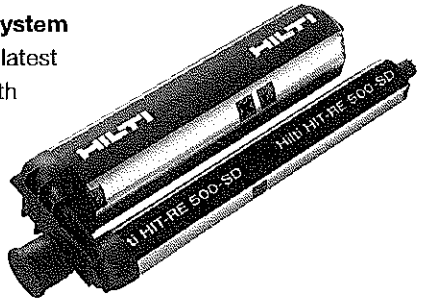

2003 IBC® Compliant Anchor **2006 IBC® Compliant Anchor**

Item No.	Description
241382	HIT-RE 500-SD (11.1 fl oz/330 ml) – 1 pack
	Includes 1 mixer and 3/8" filler tube per package
3425973	HIT-RE 500-SD (11.1 fl oz/330 ml) MC – 25 packs
	Includes 1 mixer and 3/8" filler tube per package
3428744	HIT-RE 500-SD (11.1 fl oz/330 ml)
	Includes 1 MC and mixer and and choice of MD 2000 or MD 2500 dispenser
241383	HIT-RE 500-SD (16.9 fl oz/500 ml) MC – 20 packs
	Includes 1 mixer and 3/8" filler tube per package
3433546	HIT-RE 500-SD (16.9 fl oz/500 ml)
	Includes 2 MC and MD 2500 dispenser
3426080	HIT-RE 500-SD (16.9 fl oz/500 ml)
	Includes 5 MC and ED 3500 dispenser 2.0 Ah Kit

Technical Data

Product	Epoxy Adhesive
Base material temperature	41°F to 120°F (+5°C to 49°C)
Diameter range	3/8" to 1-1/4"
Listings/Approvals	
ICC-ES	ESR 2322
NSF/ANSI standard 61	Certification for potable water
Package volume	
• Volume of HIT-RE 500-SD 11.1 fl oz/330 ml foil pack is 20.1 in³	
• Volume of HIT-RE 500-SD 16.9 fl oz/500 ml foil pack is 30.5 in³	

Gel/Full Cure Time Table (Approximate)

Base Material Temperature °F	°C	t_{gel}	t_{cure}
41	5	2.5 hrs	72 hrs
50	10	2 hrs	48 hrs
59	15	1.5 hrs	24 hrs
68	20	30 min	12 hrs
86	30	20 min	8 hrs
104	40	12 min	4 hrs

Dispensers

Battery Powered

Item No.	Description
3425363	ED 3500 2.0 Ah NiCd Kit
	Includes dispenser, (2) 2.0-Ah NiCd battery, C 7/24 standard charger and accessories in an impact-resistant plastic tool box
273676	ED 3500 Dispenser
	Includes dispenser only in cardboard box
340888	SFB 121 2.0-Ah NiCd Battery for ED 3500
378449	C 7/24 Standard Charger for ED 3500

ED 3500 2.0 Ah Kit

Foil Pack Holder

MD 2500 Manual Dispenser

Manual

Item No.	Description
338853	MD 2500 Manual Dispenser with Foil Pack Holder
	For use with HIT 11.1 fl oz/330ml and 16.9oz/500ml foil packsv
339477	Foil Pack Holder
	Replacement for MD 2500 and ED 3500

Hole Cleaning/Injection Accessories

Imperial

Hole Dia. (d_0)	Round Brush		Injection Piston		Air Nozzle	
Ø [inch]	HIT-RB	Item no.	HIT-SZ (IP)	Item no.	HIT-DL	Item no.
7/16	7/16"	273203		–	–	–
1/2	1/2"	273204	1/2"	274019	1/2"	38237
9/16	9/16"	273205	9/16"	274020	9/16"	38238
5/8	5/8"	273207	5/8"	274021	9/16"	38238
11/16	11/16"	273209	11/16"	274022	11/16"	38239
3/4	3/4"	273210	3/4"	274023	3/4"	38240
7/8	7/8"	273211	7/8"	274024	7/8"	38241
1	1"	273212	1"	274025	1"	38242
1-1/8	1-1/8"	273214	1-1/8"	274026	1"	38242
1-1/4	1-1/4"	273216	1-1/4"	274027	1"	38242
1-3/8	1-3/8"	273217	1-3/8"	274028	1-3/8"	38243
1-1/2	1-1/2"	273218	1-1/2"	274029	1-3/8"	38243
1-3/4	1-3/4"	273219	1-3/4"	274030	1-3/8"	38243

Metric

Hole Dia. (d_0)	Round Brush		Injection Piston		Air Nozzle	
Ø [inch]	HIT-RB	Item no.	HIT-SZ (IP)	Item no.	HIT-DL	Item no.
10	10	380917	–	–	–	–
12	8/12	336548	8/12	351989	8/12	371715
14	10/14	336549	10/14	351990	10/14	371716
16	12/16	336550	12/16	351991	12/16	371717
18	14/18	336551	14/18	351992	14/18	371718
20	16/20	336552	16/20	351993	16/20	371719
22	18/22	370774	18/22	269618	16/20	371719
24	24	380918	24	269619	16/20 3	71719
25	20/25	336553	20/25	351994	20/25	371720
28	28	380919	28	269620	20/25	371720
30	30	380920	30	269621	20/25	371720
32	25/32	336554	25/32	351995	25/32	371721
35	35	380921	35	269622	25/32	371721
37	37	382259	37	271499	25/32	371721
40	40	382260	40	269623	25/32	371721
42	42	382261	42	269624	25/32	371721
45	45	382262	45	269625	25/32	371721
47	47	382264	47	269626	25/32	371721
52	52	382265	52	271476	25/32	371721
55	55	382266	55	271477	25/32	371721

HIT-RB (Round Brush)

HIT-SZ (IP) (Injection Piston)

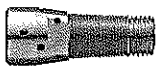

HIT-DL (Air Nozzle)

Contact Hilti for

a complete listing of additional accessories and extensions for air nozzles, brushes and injection pistons to handle embedment.

Hilti Accredited Adhesive Anchor Installer Program – call Hilti for details

4.2.6.7 Sample Calculations

Given:

2 1/2-in. HIT RE 500-SD adhesive anchors subjected to a tension load as shown.

Design objective:

Calculate the design tension resistance for this configuration.

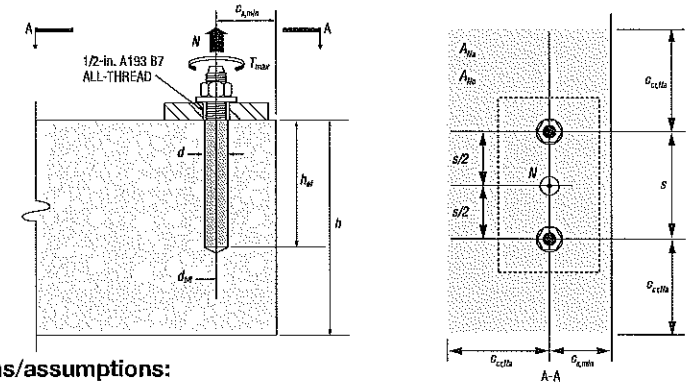

Dimensional parameters:

h_{ef} = 9.0 in.
s = 4.0 in.
$c_{a,min}$ = 2.5 in.
h = 12.0 in.
d = 1/2 in.

Specifications/assumptions:

ASTM A193 B7 all-thread rods, UNC thread, A 563 Grade HD hex nuts.
Normal weight concrete, f'c = 4,000 psi.
Seismic design category (SDC) B
No supplementary reinforcing per ACI 318-05 D.1.
Assume maximum short term (diurnal) base material temperature ≤ 100 0F.
Assume maximum long term base material temperature ≤ 80 0F.
Assume installation in dry concrete and hammer-drilled holes.
Assume concrete will remain uncracked for service life of anchorage.

Calculation per ACI 318-05 Appendix D and this report.	ACI 318 Code Ref.	
Step 1. Check minimum edge distance, anchor spacing and member thickness:	–	
c_{min} = 2.5 in. ≤ ca,min therefore ok.	–	Table 8
s_{min} = 2.5 in. ≤ s therefore ok.	–	Table 8
$h_{min} = h_{ef} + 1.25 = 9 + 1.25 = 10.25$ in. ≤ h therefore ok.	–	Table 8
Step 2. Calculate steel strength: $N_{sa} = n \times A_{se} \times f_{uta}$	D.5.1.2	–
B7 rods are considered ductile per ACI 318-05. $\therefore \Phi = 0.75$	D.1 & D.4.4a	–
$\therefore \Phi N_{sa} = \Phi \times n \times A_{se} \times f_{uta} = 0.75 \times 2 \times 0.1419 \times 125{,}000 = 26{,}606$ lb = 26.6 k		
or, using Table 7, $\therefore \Phi N_{sa} = 0.75 \times 2 \times 17{,}737 = 26.6$ k	D.5.1.2	Table 7
Step 3. Determine concrete breakout strength: $N_{cbg} = \frac{A_{Nc}}{A_{NcO}} (\Psi_{ec,N})(\Psi_{ed,N})(\Psi_{c,N})(\Psi_{cp,N})(N_b)$	D.5.2.1 & Eq. (D-5)	–
$A_{Nc} = (3h_{ef} + s)(1.5h_{ef} + c_{a,min}) = (27 + 4)(13.5 + 2.5) = 496$ in^2	–	–
$A_{NcO} = 9h_{ef}^2 = 729$ in^2	D.5.2.1 & Eq. (D-5)	–
$\Psi_{ec,N}$ = no eccentricity of tension load with respect to tension-loaded anchors	D.5.2.4	
$\Psi_{ed,N} = 0.7 + 0.3 \times \frac{c_{a,min}}{1.5\,h_{ef}}$ for $c_{a,min} \le 1.5\,h_{ef}$	D.5.2.1 & & Eq. (D-5)	–
$c_{a,min} = 2.5 < 1.5 \times 4.5$.	–	–
$\therefore \Psi_{ed,N} = 0.7 + 0.3 \times \frac{2.5}{1.5 \times 9} = 0.76$	–	–
$\Psi_{c,N}$ = 1.0 uncracked concrete assumed ($k_{c,uncr} = 24$)	D.5.2.6	Table 8
Determine c_{ac}: $h_{ef} + 5\,(c_{a,min})^{0.75} = 9 + 5\,(2.5)^{0.75} = 18.9$ in. > 12 in. therefore, $c_{ac} = 2.5\,h_{ef}$ $c_{ac} = 2.5$ (9 in.) = 22.5 in.	D.5.12.7	Section 4.1.3
For $c_{a,min} < c_{ac}$ $\Psi_{cp,N} = \frac{\max\{c_{a,min};\,1.5\,h_{ef}\}}{c_{ac}} = \frac{\max\{2.5;\,1.5 \times 9\}}{22.5} = 0.60$	D.5.2.7 & Eq. (D-13)	–
$N_b = k_{c,uncr}\sqrt{f'_c} \times h_{ef}^{1.5} = 2.4\sqrt{4000} \times (9)^{1.5} = 40{,}983$ lb	D.5.2.2 & Eq. (D-7)	–
$N_{cbg} = \frac{496}{729} \times 1.0 \times 0.76 \times 1.0 \times 0.60 \times 40{,}983 = 12715$ lb	–	–
$\Phi N_{cbg} = 0.65 \times 12{,}715 = 8{,}265$ lb = 8.3*k*	D.4.4c	–

4.2.6 HIT-RE 500-SD Epoxy Adhesive Anchoring System

Calculation per ACI 318-05 Appendix D and this report.		ACI 318 Code Ref.
Step 4. Determine bond strength: $N_{ag} = \frac{A_{Na}}{A_{NaO}} (\Psi_{ed,Na})(\Psi_{g,Na})(\Psi_{ec,Na})(\Psi_{p,Na})(N_{aO})$		Section 4.2.6 3 Eq. (D-14b)
$S_{cr,Na} = min\left(20 \times d\sqrt{\frac{\tau_{k,uncr}}{1450}}\,;\, 3\,h_{ef}\right) = 20 \times 0.5\sqrt{\frac{2{,}236}{1450}} = 12.4\ in$ $3\,h_{ef} = 27$ in $\geq 12.4 \therefore s_{cr,Na} = 12.4$ in.	–	Section 4.2.6.3 Table 9
$c_{cr,Na} = \frac{s_{cr,Na}}{2} = 6.2$ in.	–	Section 4.2.6.3 Eq. (D-14i)
$A_{Na} = (2c_{cr,Na} + s)(c_{cr,Na} + c_{a,min}) = 143.0\ in^2$	–	Section 4.2.6.3 Eq. (D-14i)
$A_{NaO} = (s_{cr,Na})^2 = 154.2\ in^2$	–	Section 4.2.6 3 D.5.3.7
For $c_{a,min} < c_{cr,Na}$: $\Psi_{ed,Na} = \left(0.7 + 0.3\,\frac{c_{a,min}}{c_{cr,Na}}\right)$		Section 4.2.6.3
$\Psi_{ed,Na} = \left(0.7 + 0.3\,\frac{2.5}{6.2}\right) = 0.82$		Section 4.2.6.3
$\tau_{k,max,uncr} = \frac{k_{k,uncr}}{\pi \times d}\sqrt{h_{ef} \times f'_c} = \frac{24}{\pi \times 0.5}\sqrt{9 \times 4000} = 2{,}899$ psi		Section 4.2.6.3 Table 8
$\psi_{g,NaO} = \sqrt{n} - \left[\left(\sqrt{n} - 1\right)\left(\frac{\tau_{k,uncr}}{\tau_{k,max,uncr}}\right)^{1.5}\right] = \sqrt{2} - \left[\left(\sqrt{2} - 1\right)\left(\frac{2{,}236}{2{,}899}\right)\right]^{1.5} = 1.13$		Section 4.2.6.3 Table 9
$\psi_{g,Na} = \Psi_{g,NaO} + \left[\left(\frac{s}{s_{cr,Na}}\right)^{0.5} \times (1 - \Psi_{g,NaO})\right] = 1.13 + \left[\left(\frac{2.5}{12.4}\right)^{0.5} \times (1\text{-}1.13)\right] = 1.06$		Section 4.2.6.3
$\psi_{ec,Na} = 1.0$ no eccentricity - loading is concentric	–	–
$\Psi_{p,Na} = \frac{\max\lvert c_{a,min}\,;\, c_{cr,Na}\rvert}{c_{ac}} = \frac{\max\lvert 2.5\,;\, 6.2\rvert}{22.5} = 0.28$	–	–
$N_{NaO} = \tau_{k,uncr}\ \pi\ d\ h_{ef} = 2{,}236\ \pi\ 0.5\ 9 = 31{,}610$ lb	–	Section 4.2.6.3 Eq. (D-14j)
$N_{ag} = \frac{A_{Na}}{A_{NaO}} (\psi_{ed,Na})(\psi_{g,Na})(\psi_{ec,N})(\psi_{p,Na})(N_{aO})$ $N_{ag} = \frac{143.0}{154.2}$ (0.82) (1.06) (1.0) (0.28) (31,610) = 7,134 lb.		Section 4.2.6.3 Eq. (D-14b)
$\therefore \phi = 0.65$	–	Table 9
$\phi N_{ag} = 0.65\ (7{,}134) = 4{,}637$ lb $= 4.6$ k		–
Step 5. Determine controlling strength:	D.4.1.2	–

Steel strength	ϕ Nsa	= 26.6 k	
Concrete breakout strength	ϕ Ncbg	= 8.3 k	
Bond strength	ϕ Nag	= 4.6 k	controls

Step 6. Convert strength to ASD using average load factor: $N_{allow,ASD} = \frac{N_d}{\alpha} = \frac{\phi N_n}{\alpha} = \frac{4.6}{1.4} = 3.3\ k$	Section 4.2

WASTE-TECH
a division of KUSTERS ZIMA

4.4

SCREEN WASHWATER COMPONENT DETAILS

ENGINEERING SUBMITTAL

WENATCHEE WWTP IMPROVEMENTS
PROJECT PO913
WENATCHEE, WA

SECTION 11092 – PERFORATED PLATE SCREENS
SECTION 11095 – SCREENINGS WASHER COMPACTOR

Wash Requirement, each: 12 GPM @ 40 psi

SCREEN WASHWATER SOLENOID VALVE DETAILS

Manufacturer:	Magnatrol
Unit/Model no.:	F16K44
Size:	1” NPT
Qty:	1 used per screen
Voltage:	120VAC
Rating:	Explosion Proof
Installation Note:	Mount w/solenoid coil in vertical position (see Gen. Arrangement drawings in Section 3.2 for illustration)

SCREEN WASHWATER BALL VALVE DETAILS

Manufacturer:	Apollo
Model no.:	76-105-01
Qty:	1 used per Screen
Size:	1” NPT
Body material:	Stainless Steel
Ball:	Stainless Steel
Seat:	RPTFE

SCREEN WASHWATER STRAINER DETAILS

Manufacturer:	Magnatrol
Unit/Model no.:	ST4SS
Size:	1”
Qty:	1 used per Screen
Screen material:	Stainless Steel
Body construction:	Stainless Steel

Magnatrol
VALVE CORP.

Available For Quick Delivery

Bronze and Stainless Steel 2-Way

SOLENOID VALVES

For Control Of
WATER • OIL • STEAM
AIR • GAS • CRYOGENICS
SOLVENTS • OXYGEN
CORROSIVE FLUIDS

Catalog 3006

Magnatrol VALVE CORP.

STAINLESS STEEL SOLENOID VALVES

Dependable • Packless

TYPE "K" FULL PORT - NORMALLY CLOSED
1/2" TO 2" PIPE SIZE

NO DIFFERENTIAL PRESSURE REQUIRED TO OPEN

MAX. FLUID TEMP.
400° F
MAX. STATIC PRESSURE
300 PSI
Except valves listed for 500 PSI

OPERATION:
Valve opens when energized and closes when de-energized. When the coil is energized the pilot valve opens, relieving the pressure above the piston, which is then lifted from its seat by the plunger. Upon de-energizing the coil, a spring closes the pilot valve and opens a bleed passageway to permit pressure to build above the piston and seat it.

CONSTRUCTION:
(*Wetted parts - No Copper Bearing Alloys in contact with fluid)
*Valve Body - 304 Stainless Steel Globe Pattern - NPT ends
(For Flanged Ends see Options page 24)
*Piston - 303 Stainless Steel
Coil Enclosure - Malleable or Cast Iron, 1/2" NPS conduit conn.
*Plunger - 430 Stainless Steel
*Pilot Valve - 303 Stainless Steel
*Bonnet Tube - 304 Stainless Steel
*Spring - Inconel
*Body Seal - Non Asbestos Gasket
*Orifice Seal - Glass Filled Teflon
*AC Shading Coil - Silver
*Stem Pin - Inconel
Coil - Encapsulated Class H, 18" leads

FOR STEAM APPLICATIONS SEE BULLETIN 3006-W Page 22

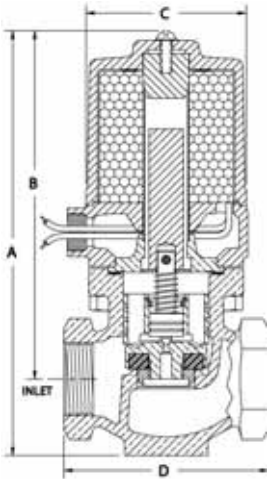

APPLICATION:
To control the flow of Corrosive Fluids, Deionized Water, Condensate, Ammonias, Vegetable Oils, Fuel Oils, Cryogenics, Flammable Liquids.** Cryogenic fluids include liquid oxygen (-297°F), liquid argon (-303°F) and liquid nitrogen (-320°F). Valve operates from zero to maximum differential pressure indicated in table. Valve must be mounted in horizontal pipe with solenoid enclosure vertical and on top.

FOR OPTIONS & ACCESSORIES SEE PAGES 24 & 25

Pipe Size Inches	Max. Diff. PSI	Type No.	Watts AC	Amps Hold 120-60	Amps Inrush 120-60	Watts DC	Ship Wt. Lbs.	Dimensions In Inches A	B	C	D
1/2	110	14K42	25	0.4	1.2	18	7	7	5-7/8	2-7/8	3-1/4
	200	14K32									
	300	29K52	45	0.8	2.4	23	10	8	6-7/8	3-1/2	
	500	E29K62					15			4	
3/4	110	14K43	25	0.4	1.3	18	8	7-1/8	6	2-7/8	3-1/2
	200	29K33	45	0.8	2.6	23	11	8-1/8	7	3-1/2	
	300	129K53	65	1.2	3.9	33					
	500	E129K63					16			4	
1	110	16K44	25	0.4	1.5	18	10	8	6-5/8	3-1/4	4-1/8
	200	31K34	45	0.8	2.8	23	13	8-7/8	7-1/2	3-1/2	
	300	131K54	65	1.2	4.2	33					
	500	E131K64					18			4	
1-1/2	115	35K46	45	0.8	3.2	23	17	10	8-1/8	4	4-7/8
	200	41K36	60	1.2	6.7	35	21	11	9-1/8	4-1/2	
	300	141K56	85	2.0	10.0	45					
	500	141K66									
2	100	36K47	45	0.8	3.5	23	27	11	8-3/4	5-3/8	6
	200	42K37	60	1.2	7.4	35	32	12	9-3/4		
	300	42K57									
	500	142K67	85	2.0	11.0	45					

Face To Face Dimensions for Flanged Ends

(For complete dimensions, weights and other sizes see Engineering Catalog 3006-ENG)

Dimension In Inches		
Pipe Size	150# Flanged	300# Flanged
1	6-1/2	7-1/2
1-1/2	6-1/2	7-1/2
2	8	9

**** CLEANING**
- Cryogenic valves are degreased & cleaned to keep them free of moisture.
- Oxygen valves are also "black light" tested.

Strainers are recommended for use with solenoid valves

(See page 19)

When you order please supply the following:
- Pipe Size
- Valve Type
- Voltage (AC or DC)
- Hertz
- Fluid
- Fluid Temperature
- Max. Diff. Pressure
- Optional Features

(See pages 24 & 25)

MAGNATROL VALVE CORPORATION
Magnatrol Valve Corporation • P.O. Box 17 • 67 Fifth Avenue • Hawthorne • New Jersey • 07507
info@magnatrol.com • Phone: 973-427-4341 • Fax: 973-427-7611 • www.magnatrol.com

VALVE CONSTRUCTION FEATURES

Valve Construction Features:

- **2-way straight thru globe design**
- **Bronze or Stainless Steel body w/ female NPT threads standard**
- **Stainless Steel available with 150# and 300# flanged ends**
- **Full port-internal pilot operated or direct acting**
- **Packless construction**
- **Continous duty coils for all voltages**
- **No differential pressure required to open.**

HOUSING

- Construction: Malleable or Cast Iron
- Designed for rugged industrial use
- Self contained terminal box with 1/2" NPS conduit connection
- Available: NEMA 12, 4, 4X and Explosion Proof

COIL

- Available Class "B" or "H" insulation
- Designed for continuous duty service
- Available in most AC or DC voltages

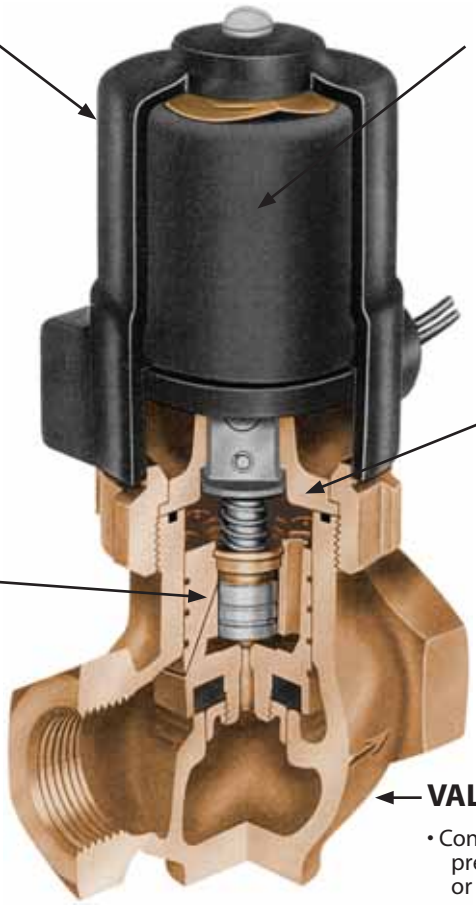

BONNET

- A flanged metallic tube encloses the plunger and hermetically seals the top of the valve

PISTON ASSEMBLY

- A sturdily constucted stem assembly consisting of a plunger and stainless steel pilot flexibly connected to the piston
- Discs are available in various materials dictated by operating conditions

VALVE BODY

- Constructed of high pressure cast bronze or stainless steel in a globe pattern with screwed ends*
- Available in a full range of sizes

Normally Closed Valve shown is typical of Type A, 1/2" thru 1-1/4"

* Stainless Steel valves available with flanged ends. Flanged Bronze valves available through Magnatrol's **Clark-Cooper Division** (See bottom of page 3).

Easy In-Line Service

Inspect, clean or service all internal parts of full port-internal pilot operated or direct acting solenoid valves while the valve body remains in the pipeline shortening costly down time and increasing productivity.

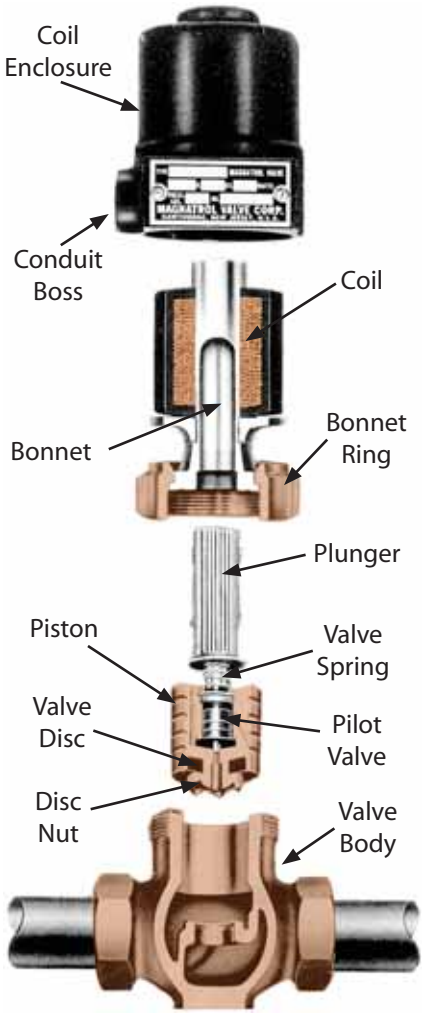

MAGNATROL SOLENOID OPERATED VALVES are used to control the flow of liquids or gases, generally in conjunction with automatic control apparatus such as thermostat, float switch, time switch, or flow meter.

SOLENOID COILS
CONTINUOUS DUTY COILS

ELECTRICAL CHARACTERISTICS
Coils are stocked for the following voltages:

Voltage	6	12	24	32	48	64	120	208	240	480	575
50, 60 Hertz AC			•				•	•	•	•	•
DC	•	•	•	•	•	•	*		*		

* Furnished with surge protecting capacitor

ENCAPSULATED COIL

Reference should be made to the Bulletins to determine the availability of a required valve for a specific power supply.

Consult the factory for information regarding voltage and frequencies not listed.

Valves for A.C. sevice can be converted for use on other A.C. voltages simply by changing the coil. Similarly D.C. valves can be converted for other D.C. voltages. Consult factory regarding conversion from A.C. to D.C. or D.C. to A.C.

CURRENT CONSUMPTION:
Current values shown in the bulletins are for 120 volts, 60 hertz. For other voltages the current is inversely proportional: For instance, if a given valve draws 0.5 amperes on 120 volts it would draw 0.25 amperes on 240 volts, or 0.125 amperes on 480 volts. Where power consumption is shown in D.C. watts, the values given should be divided by line voltage to obtain the current in amperes. Power consumption for all valves is shown in the individual bulletins.

CONSTRUCTION:
Coils can be continuously energized without overheating or failure. Coils supplied with 18" long, 18 gage wire leads standard**, encapsulated for temperature of intended service, providing a coil with excellent resistance to shock, moisture, oil and chemicals.

General Service: Class "B" coils supplied for gas and liquids up to 212° F and where ambient temperatures do not exceed 40° C (104° F). The Class "H" coil should be specified for higher ambient temperatures.

High Temperature Service: Class "H" coils supplied for gases and liquids from 212° - 400° F and where ambient temperatures do not exceed 100° C (212° F).

**Longer continuous leads available

INSTALLATION:
The coil is a two wire device which may be controlled by either a single or double pole switch. The switch should always be installed in the hot leg of 120 volt circuits. Where both legs are hot, such as 240 or 480 volt circuits, a double pole switch is preferable, however, if a single pole switch is used, then the wiring should have top quality insulation since even minute leakage currents may give rise to sticking problems. On motor hookup with step control starter, full voltage should be supplied to coil immediately.

Note: Coil can be readily changed while valve is still under pressure.

MAGNATROL VALVE CORPORATION
Magnatrol Valve Corporation • P.O. Box 17 • 67 Fifth Avenue • Hawthorne • New Jersey • 07507
info@magnatrol.com • Phone: 973-427-4341 • Fax: 973-427-7611 • www.magnatrol.com

OPTIONAL FEATURES

For Dependable • Packless Solenoid Valves

See Individual Options For Availability For Use With Specific Valve Types

BOTTOM MOUNTED OPTIONS Note: Only One Bottom Mount Option Can Be Installed On Each Valve

MANUAL OVERRIDE

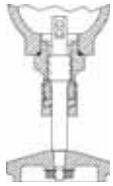

(Normally Closed valves only)
(Designated by Prefix "MO")
Enables manual opening of solenoid valve during power failure or to override automatic controls.

LEVER

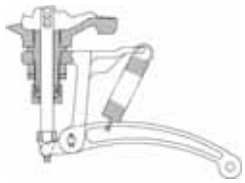

(Normally Closed valves only)
(Designated by Prefix "LV")
Enables rapid opening of solenoid valve. Can be chain operated for use at inaccessible locations.

DASHPOT

(Designated by Prefix "DP")
Furnished for clean liquids to reduce water hammer effect sometimes encountered in long pipe runs by slowing valve closing.

FLOW CONTROL

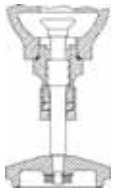

(Normally Closed, NR & MR valves, only)
(Designated by Prefix "FC")
Provides a manual method of reducing or throttling the flow.

MOUNTING STUD

(Designated by Prefix "MS")
3/8"-16 thread can be furnished in bottom of body to facilitate mounting on bracket. (Not available on 2", 2-1/2" and 3")

DRAIN

(Normally Closed, NR & MR valves, only)
(Designated by Prefix "DR") - 1/4" NPT plug supplied in bottom of valve to facilitate draining of liquid from valve body.

OTHER OPTIONS

PILOT TAP

(Designated by Prefix "PT")
Type D, G & GR Valves can be furnished with 1/8" tapped hole for pilot connection or pressure gauge.

DIN CONNECTOR

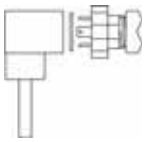

(Designated by Suffix "DN")
Provides 3 prong connector for easy power connect / disconnect.

"HUM FREE": (No AC Hum/Buzz)
(Designated by Suffix "HF") - The "HUM FREE" option eliminates the "AC hum" associated with AC operated solenoid valves. Enables valves to be used where an AC hum would not be acceptable and AC is the only power source available IE: Hospitals, labs, schools (class rooms), homes, office environments etc. & when 24 vac is required for 40 series valves.

Leak / Dead Tight:
(Normally Closed valves only)
(designated by Prefix "LT") - The Leak / Dead Tight Option is used to satisfy a Class VI tight shutoff requirement. This option offers 'soft' resilient seating or 'gapless' seal. Consult Factory for Max. Diff. Pressure and Valve Type availability.

Flanged Ends for SS Valves:
(Designated by Suffix "F1" for 150 lb or "F3" for 300 lb Flanges) Available on stainless steel valves. (Flanged ends for bronze valves available through our Clark-Cooper Division, see bottom of page 3).

Explosion-Proof and Watertight Solenoids:
(Designated by Prefix "F") – are Explosion-proof and NEMA 4, 7C & D, 9E, F & G suitable for use in hazardous locations requiring Class I, Groups C & D & Class II Groups E, F, and G equipment.

NEMA 4X:
(Designated by Prefix "F" AND Suffix "ZP") – are suitable for use in locations requiring a NEMA 4X designation. "ZP" (Zinc Plating) replaces the standard paint used on the Coil housing (cup and base). The additional corrosion protection satisfies NEMA 4X requirements.
Internal construction, pressure ratings, power consumption, and external dimensions are the same as for standard valves.

Nickel Plating:
(Designated by Suffix "NP") - Plating is 0.0005" Thick Meets Mil Spec. C26074

Universal Mount Valves For Mounting In Vertical Pipe Runs
(See Magnatrol Universal Mount Catalog 3006-UM)

MAGNATROL VALVE CORPORATION
Magnatrol Valve Corporation • P.O. Box 17 • 67 Fifth Avenue • Hawthorne • New Jersey • 07507
info@magnatrol.com • Phone: 973-427-4341 • Fax: 973-427-7611 • www.magnatrol.com

ORDERING GUIDELINES

Magnatrol Solenoid Valves

If you have any questions or wish to request a quote:

Phone: 973-427-4341 • Fax: 973-427-7611

E-Mail: info@magnatrol.com

For Help In Choosing The Correct Valve For Your Application:

REFER TO THE VALVE SELECTION CHART ON PAGE 3

MAGNATROL VALVE TYPE NUMBERS PREFIX AND SUFFIX BREAKDOWN

For Additional Information On Options
See Optional Features Pages 24 & 25

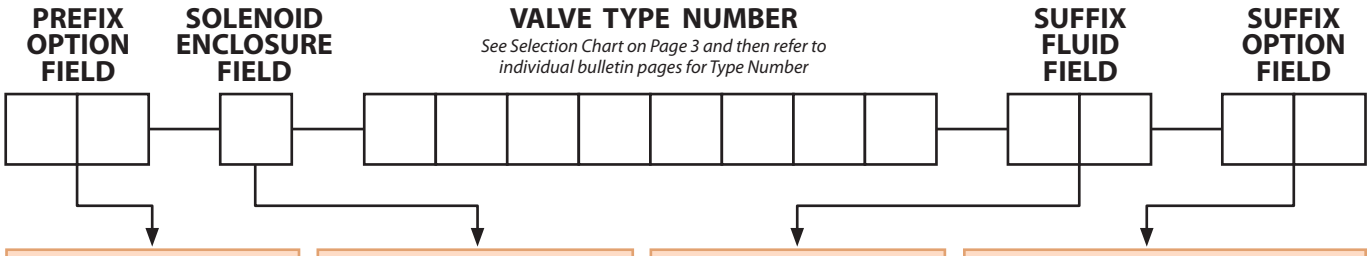

Prefix Letters for Options:
Choose One

DP ..... Dashpot (Consult factory for valve type availability)
DR ..... Drain Plug **
FC ..... Flow Control **
LV ..... Lever *
MO ..... Manual Override
MS ..... Mounting Stud
PD ..... Position Display *
PS ..... Position Switch *
PT ..... Pilot Tap ***

* Normally Closed Only
** Normally Closed and NR & MR Valves
*** Pilot Tap: Can be used along with any other option. Available for Type D, G and GR only.

Prefix Letters for Solenoid Enclosures:

(Blank) = NEMA12
F = Explosion Proof & NEMA 4
F with ZP Suffix = NEMA 4X

Suffix Letters for Fluids: †

A ..... Air
B ..... Brine
C ..... Gritty Coolant
G ..... Gas
H ..... Hot Water
J ..... Jet Fuel or Kerosene
K ..... Gasoline or Naphtha
L ..... Alcohol
O ..... Oil
P ..... Soluble Oil or Coolant
R ..... Freon/Refrigerant
V ..... Sandy Well Water
W ..... Cold Water
Y ..... Gaseous Oxygen
YZ ... Liquid Oxygen
Z ..... Cryogenics

† If your fluid is not listed leave blank & advise Magnatrol of fluid

Suffix Letters for Options:

DN .... Din Connector
E ..... Extra Fast Closing
HF ..... Hum Free
HT ..... High Temperature Coil
LT ..... Leak/Dead Tight (Soft Seat Pilot)
NP .... Nickel Plated (.005 Thickness) Meets Mil Spec C26074
X ..... Sealant
ZP ..... Zink Plated Cup & Base

For Stainless Valves: ††

F1 ..... 150# Flanged Ends
F3 ..... 300# Flanged Ends

†† For flanged bronze valves contact our Clark-Cooper Div. See bottom of page 3.

VALVE DISC AND GASKET CHANGES:

Valve Disc and Gasket are sometimes changed/substituted for better performance with a given fluid. The change is represented by the insertion of a letter after the Valve Type letter(s). The inserted letter represents the substituted Disc/Gasket material.
See examples below:

Examples:

V - Viton Disc (i.e. Type 18A44 with Viton Seals becomes 18AV44)

T - Teflon Disc (i.e. Type 18A44 with Teflon Seals becomes 18AT44)

B - Buna-N Disc (i.e. Type 16L44 with Buna-N Seals becomes 16LB44)

NOTE: Refer to individual bulletins for Valve Type's standard Disc and Gasket materials.

NOTE

Magnatrol Valve Type Numbers DO NOT include Voltage information.

VOLTAGE (AC Volts and Hz or DC Volts) MUST BE SPECIFIED when requesting a quote or placing and order.

76-100 Series

Stainless Steel Ball Valve

Threaded, 1/4" to 1" 2000 psig WOG, 1-1/4" to 2" 1500 psig WOG, 2-1/2" to 3" 1000 psig WOG. (See referenced P/T chart)
Cold Non-Shock. 150 psig Saturated Steam, Vacuum Service to 29 inches Hg.
Federal Specification: WW-V-35C, Type: II, Composition: SS, Style: 3.
MSS SP-110; Ball Valves Threaded, Socket-Welding, Solder Joint, Grooved and Flared Ends.

FEATURES

- Investment cast components
- RPTFE seats and stuffing box ring
- Mounting pad for easy actuator mounting
- Blow-out-proof stem design
- Adjustable packing gland
- Meets NACE MR-01-75
- SS lever and nut
- (-24) 1/4" to 2" Certified to API 607, 4th Edition, Class 600 burn

STANDARD MATERIAL LIST

1. Lever and grip	304 SS w/vinyl
2. Stem packing	RPTFE
3. Stem bearing	RPTFE
4. Ball	A276-316
5. Seat (2)	RPTFE
6. Retainer	A276-316 (1/4" to 1") A351-CF8M (1-1/4" to 3")
7. Gland nut	A276-316
8. Stem	A276-316
9. Lever nut	18-8 SS
10. Body seal (1-1/4" to 3")	PTFE
11. Body	A351-CF8M

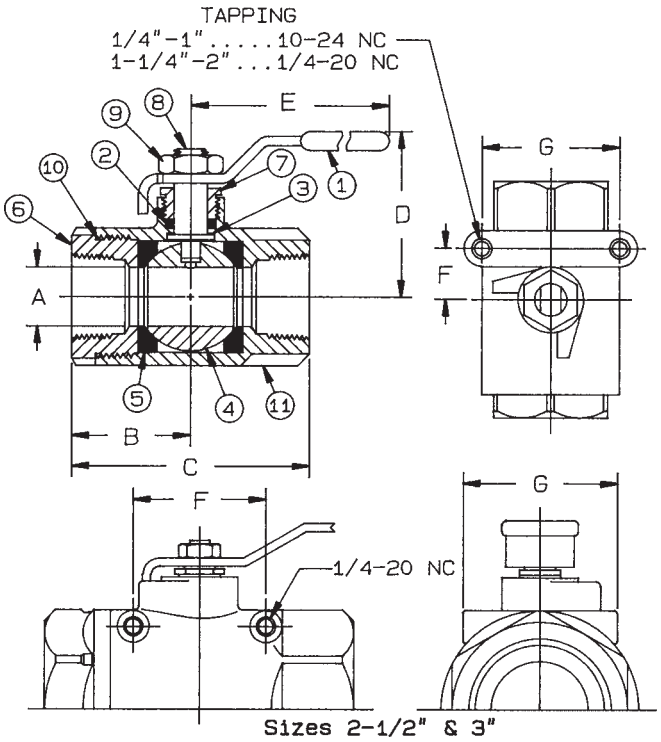

STAINLESS STEEL BALL VALVE

NUMBER	SIZE	A	B	C	D	E	F	G	Wt.
76-101-01	1/4"	.37	1.03	2.06	1.75	3.87	.50	1.12	.58
76-102-01	3/8"	.37	1.03	2.06	1.75	3.87	.50	1.12	.54
76-103-01	1/2"	.50	1.12	2.25	1.81	3.87	.50	1.12	.63
76-104-01	3/4"	.68	1.50	3.00	2.12	4.87	.87	1.37	1.27
76-105-01	1"	.87	1.68	3.37	2.25	4.87	.87	1.37	1.63
76-106-01	1-1/4"	1.00	2.00	4.00	2.62	5.50	.93	1.50	3.06
76-107-01	1-1/2"	1.25	2.18	4.37	3.05	8.00	.93	1.50	4.04
76-108-01	2"	1.50	2.75	5.50	3.24	8.00	.93	1.50	6.05
76-109-01	2-1/2"	2.50	3.37	6.75	4.12	8.00	2.75	3.37	15.57
76-100-01	3"	2.50	3.37	6.75	4.12	8.00	2.75	3.37	16.79

OPTIONS AVAILABLE:

(SUFFIX)	OPTION	SIZES
-02-	Stem Grounded	1/4" to 3"
-03-	1-1/4" CS Stem Extension	1/4" to 3"
-04-	2-1/4" CS Stem Extension	1/4" to 3"
-07-	Steel Tee Handle	1/4" to 2"
-08-	90° Reversed Stem	1/4" to 3"
-14-	Side Vented Ball (Uni-Directional)	1/4" to 2"
-15-	Wheel Handle, Steel	1/4" to 2"
-16-	Chain Lever - Vertical	3/4" to 2"
-19-	Lock Plate	1/4" to 2"
-21-	UHMWPE Trim (Non-PTFE)	1/4" to 3"
-24-	Graphite Packing	1/4" to 3"
-27-	SS Latch-Lock Lever & Nut	1/4" to 3"
-30-	Cam-Lock and Grounded	1/4" to 2"
-32-	SS Tee Handle & Nut	1/4" to 2"
-35-	VTFE Trim	1/4" to 3"
-39-	SS Hi-Rise Locking Wheel Handle, SS Nut	1/4" to 2"
-40-	Cyl-Loc and Grounded	1/4" to 2"
-44-	Seal Welded	1/4" to 2"
-45-	Less Lever & Nut	1/4" to 3"
-46-	Latch Lock Lever - Lock in Closed Position Only	1/4" to 3"
-47-	SS Latch Lock Oval Handle	1/4" to 1"
-48-	SS Oval Handle (No Latch) & Nut	1/4" to 2"
-49-	Assembled Dry	1/4" to 3"
-50-	2-1/4" CS Locking Stem Extension	1/4" to 3"
-57-	Oxygen Cleaned	1/4" to 3"
-58-	Chain Lever - Horizontal	3/4" to 2"
-60-	Static Grounded Ball & Stem	1/4" to 3"
-64-	250# Steam Trim	1/4" to 3"
-P01-	BSPP (Parallel) Thread Connection	1/4" to 3"
-T01-	BSPT (Tapered) Thread Connection	1/4" to 3"

For Pressure/Temperature Ratings, Refer to Page M-12, Graph No. 14 (1/4" to 1")
Refer to Page M-11, Graph No. 12 (1-1/4" to 2")
Refer to Page M-10, Graph No. 8 (2-1/2" to 3")

COPYRIGHT ©2006 CONBRACO IND., INC. – PRINTED IN U.S.A.

STRAINERS
Bronze • Stainless Steel

APPLICATION:

The presence of foreign particles in an automatic valve may seriously affect its dependability. The installation of a strainer close to the inlet side of the valve is the best means of preventing the entrance of pipe chips, scale, rust, pipe dope, welding slag or sediment into the valve, provided the screen is periodically removed for cleaning.

CONSTRUCTION:

Strainer bodies have screwed ends. Screens are stainless steel with opening sizes as listed in tables below. Other sizes can be furnished upon request. Liberal straining area provides for fluid passage at minimum pressure drop. Screens are easily removed for cleaning. Strainers are furnished with NPT blowoff connections unplugged. See charts below for blow-off sizes (C Dim.)

CLEANING FOR CRYOGENIC & OXYGEN SERVICE:

- Strainers for Cryogenic applications are degreased and cleaned to keep them free of moisture.
- Strainers for Oxygen service are degreased and cleaned then "black light" tested.

BRONZE 1/4" TO 3" PIPE SIZE

Pipe Size Inches	Screen Size	Type No.	Ship Wt. Lbs.	Dimensions In Inches		
				A	B	C
1/4	60 Mesh 0.009 Openings	ST 0	3/4	2-3/4	2-1/4	1/4
3/8		ST 1	3/4	2-3/4	2-1/4	1/4
1/2		ST 2	3/4	2-3/4	2-1/4	1/4
3/4		ST 3	1-1/2	3	2-9/16	3/8
1		ST 4	2-1/4	3-3/4	2-3/4	3/8
1-1/4	0.16 Diameter Perforations Lined With 30 Mesh	ST 5	3-1/4	4-7/16	3-5/8	3/4
1-1/2		ST 6	4-1/2	4-15/16	3-7/8	3/4
2		ST 7	7	6-1/8	5-1/16	1
2-1/2		ST 8	12-1/2	8-1/4	6	1-1/4
3		ST 9	18	9	6-3/4	1-1/2

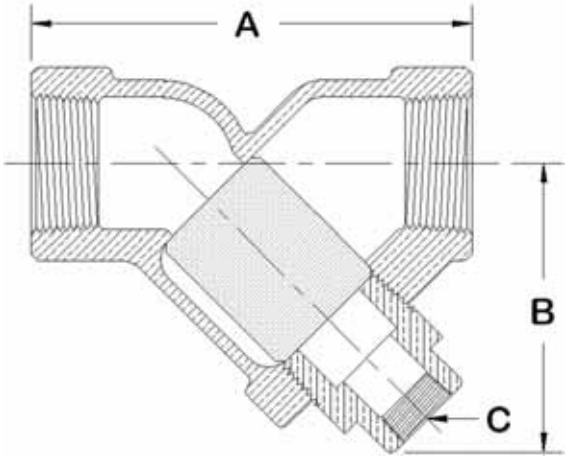

STAINLESS STEEL 1/2" TO 2" PIPE SIZE

Pipe Size Inches	Screen Size	Type No.	Ship Wt. Lbs.	Dimensions In Inches		
				A	B	C
1/2	60 Mesh 0.009 Openings	ST 2SS	1-1/2	3	2-3/8	1/4
3/4		ST 3SS	2-1/4	3-3/4	2-13/16	3/8
1		ST 4SS	3-1/4	4-5/8	3-1/8	3/8
1-1/2	0.16 Diameter Perforations Lined w/30 Mesh	ST 6SS	6-3/4	5-5/8	4-3/4	3/4
2		ST 7SS	11-1/2	7	6	1

PRESSURE TEMPERATURE RATINGS

MATERIAL	STEAM	LIQUIDS
BRONZE	300 PSI @ 400°F	600 PSI @ 100°F
STAINLESS STEEL	845 PSI @ 750°F	1,440 PSI @ 100°F

WENATCHEE WWTP IMPROVEMENTS
PROJECT PO913
WENATCHEE, WA

SECTION 11092 – PERFORATED PLATE SCREENS
SECTION 11095 – SCREENINGS WASHER COMPACTOR

ROTAMETER DETAILS

Unit/Model no.:	McMaster-Carr 4230K43
Type:	Versa-Mount High-Pressure Flowmeter
Size:	1” NPT
Range:	2-20 gpm
Fittings:	Stainless Steel, 1” female NPTF

For information about flowmeters, see page 551. For information about pipe size, see pages 2-3.

Vertical-Mount Shatterproof High-Pressure Water Flowmeters

A Type 304 stainless steel body and Type 316 stainless steel fittings give these flowmeters great impact resistance to prevent shattering and spilling. For use with water. Scale is graduated in gallons per minute. Window is acrylic. Mount vertically; flow moves from bottom to top. O-rings are fluoroelastomer. Accuracy is ±3%. Maximum pressure is 1,500 psi at 70°F. Temperature range is 33° to 350°F. Connections are NPT female.

Flow Range, gpm	Pipe Size	O'all Ht.		
0.2-2	1/2"	11"	1791K72	$633.76
0.4-4	1/2"	11"	1791K73	633.76
0.6-6	1/2"	11"	1791K74	633.76
1-10	1"	13 1/4"	1791K75	792.23
1.6-16.5	1"	13 1/4"	1791K76	792.23
2.5-25	1"	13 1/4"	1791K77	792.23

Versa-Mount Transparent-Body Flowmeters

Quickly spot problems from a distance—these flowmeters have a transparent body so you can monitor flow in addition to reading the scale. All have a shock-resistant spring-loaded piston so they can be mounted horizontally, vertically, or at any angle. The dual scale shows flow rate in both gallons per minute and liters per minute. Body is polysulfone, except for 4161A61-A66 and 4161A41-A46, which have a polycarbonate body. O-rings are Buna-N. Accuracy is ±5%. Maximum pressure is 325 psi at 70°F.

Easy-to-install flowmeters have union fittings.

Flowmeters ***for water*** have a minimum temperature of 33°F.

Flowmeters ***for hydraulic oil*** are not rated for minimum temperature.

Flow Range, gpm/lpm	Pipe Size	Max. Temp.	Scale Lg.	O'all Lg.		
For Water						
Polysulfone Fittings—NPTF (Dryseal) Male						
0.5-4 / 2-15	1"	250°F	2 1/2"	5 1/4"	4197K11	$65.35
1-7 / 4-26	1"	250°F	2 1/2"	5 1/4"	4197K12	65.35
1-10 / 4-35	1"	250°F	2 1/2"	5 1/4"	4197K13	65.35
1-16 / 5-60	1"	250°F	2 1/2"	5 1/4"	4197K14	65.35
3-18 / 15-65	1"	250°F	2 1/2"	5 1/4"	4197K15	65.35
4-28 / 20-100	1"	250°F	2 1/2"	5 1/4"	4197K16	65.35
Brass Fittings—NPTF (Dryseal) Female						
0.5-4 / 2-15	1/2"	250°F	2 1/2"	7 3/4"	4197K21	110.42
1-7 / 4-26	1/2"	250°F	2 1/2"	7 3/4"	4197K22	110.42
1-10 / 4-35	1/2"	250°F	2 1/2"	7 3/4"	4197K23	110.42
1-16 / 5-60	1/2"	250°F	2 1/2"	7 3/4"	4197K24	110.42
Brass Fittings—NPTF (Dryseal) Male						
0.5-4 / 2-15	3/4"	250°F	2 1/2"	8 1/4"	4197K31	114.93
1-10 / 4-35	3/4"	250°F	2 1/2"	8 1/4"	4197K23	114.93
1-16 / 5-60	3/4"	250°F	2 1/2"	8 1/4"	4197K25	114.93
4-28 / 20-100	3/4"	250°F	2 1/2"	8 1/4"	4197K27	114.93
Easy-to-Install for Water						
Polysulfone Fittings—NPTF (Dryseal) Female						
0.5-5 / 2-20	1/2"	200°F	1 3/4"	7 3/16"	4161A61	103.17
1-10 / 4-40	3/4"	200°F	1 5/8"	7 9/16"	4161A63	120.73
1-15 / 5-55	3/4"	200°F	1 3/4"	7 9/16"	4161A64	120.73
3-30 / 12-108	1"	200°F	1 5/8"	7 9/16"	4161A66	120.73
Brass Fittings—NPTF (Dryseal) Female						
0.5-5 / 2-20	1/2"	200°F	1 3/4"	7 3/16"	4161A41	150.37
1-10 / 4-40	1/2"	200°F	1 5/8"	7 3/16"	4161A42	150.37
1-10 / 4-40	3/4"	200°F	1 5/8"	7 9/16"	4161A43	167.93
1-15 / 5-55	3/4"	200°F	1 3/4"	7 9/16"	4161A44	167.93
1-15 / 5-55	1"	200°F	1 3/4"	7 9/16"	4161A45	167.93
3-30 / 12-108	1"	200°F	1 5/8"	7 9/16"	4161A46	167.93
Easy-to-Install for Hydraulic Oil						
Polysulfone Fittings—NPTF (Dryseal) Female						
0.5-5 / 3-20	1/2"	250°F	1 15/16"	7 3/16"	4161A71	107.56
1-10 / 4-40	1/2"	250°F	1 13/16"	7 3/16"	4161A72	107.56
1-10 / 4-40	3/4"	250°F	1 13/16"	7 9/16"	4161A73	125.12
1-15 / 5-55	3/4"	250°F	1 15/16"	7 9/16"	4161A74	125.12
1-15 / 5-55	1"	250°F	1 15/16"	7 9/16"	4161A75	125.12
3-30 / 15-110	1"	250°F	2"	7 9/16"	4161A76	125.12
Brass Fittings—NPTF (Dryseal) Female						
0.5-5 / 3-20	1/2"	250°F	1 15/16"	7 3/16"	4161A51	154.76
1-10 / 4-40	1/2"	250°F	1 13/16"	7 3/16"	4161A52	154.76
1-10 / 4-40	3/4"	250°F	1 13/16"	7 9/16"	4161A53	172.32
1-15 / 5-55	3/4"	250°F	1 15/16"	7 9/16"	4161A54	172.32
1-15 / 5-55	1"	250°F	1 15/16"	7 9/16"	4161A55	172.32
3-30 / 15-110	1"	250°F	2"	7 9/16"	4161A56	172.32

Versa-Mount Shock-Resistant Air Flowmeters

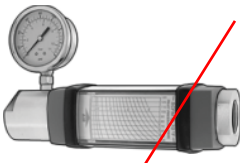

With Pressure Gauge

These air flowmeters have a shock-resistant spring-loaded piston so they can operate in any position—horizontal, vertical, or at an angle. The scale rotates 360° for easy viewing and is protected by a polycarbonate shield. Scale shows flow rate in standard cubic feet per minute. All flowmeters have an anodized aluminum body and fluoroelastomer O-rings. Accuracy is ±2%, except 1/4" pipe size flowmeters, which are not rated. Temperature range is –20° to +240°F. Connections are NPTF (Dryseal) female.

Scale shows flow rate relative to pressure. If pressure is unknown or fluctuates, use flowmeters ***with pressure gauge***, which have a glycerin-filled pressure gauge that measures pressure from 0 to 160 psi.

Flow Range, scfm	Max. psi @ 70°F	Pipe Size	Scale Lg.	O'all Lg.		
Without Pressure Gauge						
0.5-5	1,000	1/4"	1 1/4"	4 13/16"	4216K12	$173.68
1-10	1,000	1/4"	1 1/4"	4 13/16"	4216K14	173.68
2-20	1,000	1/4"	1 1/4"	4 13/16"	4216K42	173.68
3-25	1,000	1/2"	2 1/8"	6 5/8"	4216K41	222.11
3-30	1,000	1/4"	1 1/4"	4 13/16"	4216K16	173.68
5-50	1,000	1/2"	2 1/8"	6 5/8"	4216K53	222.11
5-50	1,000	3/4"	2 3/4"	7 1/4"	4216K56	318.95
10-100	1,000	1/2"	2 1/8"	6 5/8"	4216K54	222.11
10-100	1,000	3/4"	2 3/4"	7 1/4"	4216K34	318.95
15-150	1,000	1/2"	2 1/8"	6 5/8"	4216K55	222.11
15-150	1,000	3/4"	2 3/4"	7 1/4"	4216K77	318.95
15-150	1,000	1"	2 3/4"	7 1/4"	4216K81	318.95
25-250	1,000	3/4"	2 3/4"	7 1/4"	4216K78	318.95
25-250	1,000	1"	2 3/4"	7 1/4"	4216K82	318.95
40-400	1,000	1 1/2"	5 1/4"	12 1/4"	4216K83	650.00
With Pressure Gauge						
0.5-5	600	1/4"	1 1/4"	6 1/8"	4216K11	328.42
1-10	600	1/4"	1 1/4"	6 1/8"	4216K13	328.42
2-20	600	1/4"	1 1/4"	6 1/8"	4216K22	328.42
3-25	600	1/2"	2 1/8"	8"	4216K43	344.21
3-30	600	1/4"	1 1/4"	6 1/8"	4216K15	328.42
5-50	600	1/2"	2 1/8"	8"	4216K23	344.21
5-50	600	3/4"	2 3/4"	8 15/16"	4216K26	465.26
10-100	600	1/2"	2 1/8"	8"	4216K24	344.21
10-100	600	3/4"	2 3/4"	8 15/16"	4216K33	465.26
15-150	600	1/2"	2 1/8"	8"	4216K25	344.21
15-150	600	3/4"	2 3/4"	8 15/16"	4216K27	465.26
15-150	600	1"	2 3/4"	8 15/16"	4216K91	465.26
25-250	600	3/4"	2 3/4"	8 15/16"	4216K28	465.26
25-250	600	1"	2 3/4"	8 15/16"	4216K92	465.26
40-400	600	1 1/2"	5 1/4"	13 13/16"	4216K93	770.83

Versa-Mount High-Pressure Water Flowmeters

Choose these heavy duty flowmeters for use in high-pressure applications—they're built to withstand water pressures up to 3,500 psi at 70°F. All have a shock-resistant spring-loaded piston so they can operate in any position—horizontal, vertical, or at an angle. Flowmeters have a dual scale that shows flow rate in both gallons per minute and liters per minute. Scale rotates 360° for easy viewing and is protected by a polycarbonate shield. Flowmeters have a brass body, Type 303 stainless steel fittings, and fluoroelastomer O-rings. Accuracy is ±2%, except 1/4" pipe size flowmeters, which are not rated. Temperature range is –20° to +240°F. Connections are NPTF (Dryseal) female.

Flow Range, gpm/lpm	Pipe Size	Scale Lg.	O'all Lg.		
0.02-0.2 / 0.1-0.75	1/4"	1 1/4"	4 13/16"	4230K41	$209.47
0.05-0.5 / 0.2-1.9	1/4"	1 1/4"	4 13/16"	4230K42	209.47
0.1-1 / 0.5-3.75	1/4"	1 1/4"	4 13/16"	4230K24	209.47
0.2-2 / 1-7.5	1/4"	1 1/4"	4 13/16"	4230K25	209.47
0.2-2 / 1-7.5	1/2"	2 1/8"	6 5/8"	4230K31	272.63
0.5-5 / 2-19	1/2"	2 1/8"	6 5/8"	4230K81	272.63
0.5-5 / 2-19	3/4"	2 3/4"	7 1/4"	4230K32	418.95
1-10 / 5-38	3/4"	2 3/4"	7 1/4"	4230K33	418.95
1-15 / 4-56	1/2"	2 1/8"	6 5/8"	4230K93	272.63
2-20 / 10-76	3/4"	2 3/4"	7 1/4"	4230K95	418.95
2-20 / 10-76	1"	2 3/4"	7 1/4"	4230K43	418.95
3-30 / 10-115	3/4"	2 3/4"	7 1/4"	4230K86	418.95
3-30 / 10-115	1"	2 3/4"	7 1/4"	4230K44	418.95
5-50 / 20-190	1"	2 3/4"	7 1/4"	4230K45	418.95
5-50 / 20-190	1 1/4"	5 1/4"	12 1/4"	4230K78	1,005.83
10-100 / 50-380	1 1/4"	5 1/4"	12 1/4"	4230K88	1,005.83
10-100 / 50-380	1 1/2"	5 1/4"	12 1/4"	4230K46	1,005.83
10-150 / 50-560	1 1/4"	5 1/4"	12 1/4"	4230K29	1,005.83
10-150 / 50-560	1 1/2"	5 1/4"	12 1/4"	4230K47	1,005.83

WASTE▪TECH
a division of KUSTERS ZIMA

4.5

FILTERSCREEN O & M MANUAL

FILTERSCREEN

OPERATION AND MAINTENANCE MANUAL

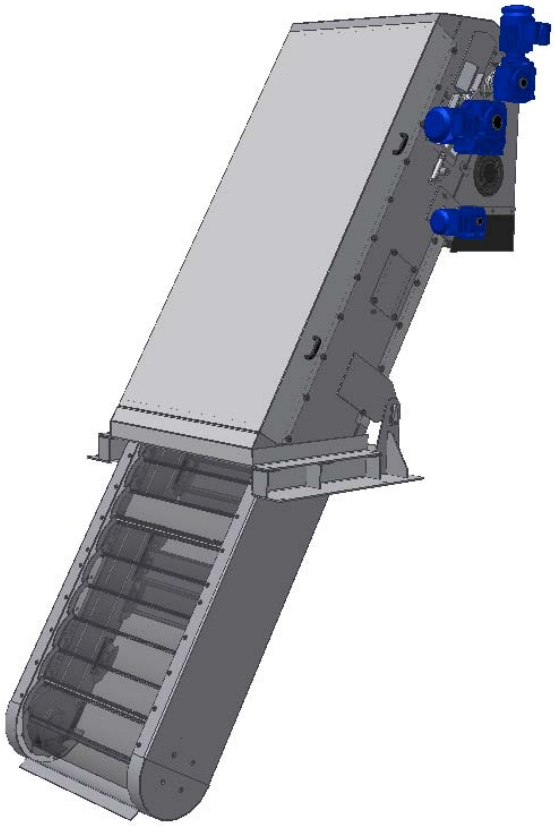

1. Safety Rules / Liability / Warranty

The machines delivered are in accordance with the state of the art at time of sale and the relevant valid safety rules at the time of completion.

No warranty will be given for damage to the machines delivered which arise for the following reasons:

- Ignorance or non-observance of this operating manual
- Insufficiently qualified or insufficiently instructed specialists of the user
- Normal wear and tear
- Incorrect or negligent treatment of the machine

This applies in particular to failure to take proper measures in the following cases:

- Operation and monitoring of the unit
- Inspection, care and maintenance
- Use of unsuitable operating and auxiliary equipment
- Use of non-original spare parts
- Faulty building works or unsuitable building plot
- Use of any kind of force
- In the case of bought-out items, the manufacturer's liability is limited to the assignment of liability claims

The user carries the responsibility for ensuring that the following requirements are met:

- The safety rules for the machines and their handling are adhered to
- Inexpert changes, or changes to the machines without previous permission of the manufacturer, especially to the safety devices, are not attempted
- Faulty installation, start-up and operation are prevented
- Unsuitable or inexpert use of the machine is avoided
- In addition to the safety notes in this manual, all supplementary, higher ranking, inter-company or local regulations are followed

1.1. Regulations

For machine operation, the latest valid accident prevention regulations apply. They must be attached to the machine in the working area so that they are clearly visible. All working staff must be regularly familiarised with the regulations.

The hygiene regulations for sewage engineering units must be taken into account.

When dealing with hazardous substances, the mandatory safety regulations must be observed (see regulations concerning handling of chemical substances).

The safety data sheets appropriate to the medium must be taken into account.

1.2. Safety Equipment

Before starting work on the machines, always set the main switch and main fuse to zero (0). Restarting the machine by an unauthorized person must be avoided by suitable measures.

Each machine is fitted with an emergency stop switch in dangerous areas. Operating this switch causes the machine to shut down.

1.3. Potential Dangers

The machines and large components must only be transported with approved lifting devices. Care must be taken that their capacity corresponds at least to the weight of the machine / components, and that they are fastened in an expert manner.

Work on the electrical installation is only permissible after all active parts have been isolated from the mains. The safety regulations for electronic units and the necessary qualification of the person working on the unit must be observed.

1.4. Disposal

The user is responsible for disposal of worn parts, lubricants etc. in accordance with the following regulations:

- Federal law and ordinance on emission control
- Water resources policy act
- Law on waste disposal
- Regulations regarding scrap

The user is responsible for selecting and monitoring the disposal processes and disposal staff and for providing written proof of this.

1.5. Safety Precautions

The machines delivered are in accordance with the state of art of sale and the relevant safety rules at the time of completion.

The responsible user of the machine must ensure that

- All necessary work is only carried out by adequately qualified, skilled staff
- The staff operating the machine have been trained and made aware of possible hazards which may arise from the machine.
- Starting up is only carried out when:
  - The operating instructions have been read carefully and understood
  - Installation has been completed
  - All safety components have been fitted (e.g. covers)
  - The flume has been covered with gratings or safeguarded with railings
  - The electrical controls have been installed completely, the electrical units are connected, and an emergency stop impact button fitted
  - A dry function test has been carried out by an experienced person
  - The EMERGENCY STOP BUTTON has been operated and the main switch at the control cabinet set to OFF (0); also, that a sign has been clearly displayed to show that work is being done on the Filterscreen, to prevent the machine from being operated by unauthorised people

- The inspection and maintenance sequences laid down by the manufacturer are followed

- Only original accessories and spare parts are used, to ensure safe functioning. If this is not followed, the manufacturer cannot accept warranty claims

- When working on parts which come into contact the medium, protective gloves, goggles and clothing must be worn. Should you come in contact with the medium, the affected parts must be sterilised immediately.

2. General Description of the Filterscreen

2.1. Applications in accordance with the intended use

The Filterscreen is constructed for mechanical cleaning of liquids, in particular municipal and industrial sewage. Please refer to the nameplate and the hydraulic calculations of the manufacturer for the performance data. The machine may only be operated in a hazardous location in accordance with the zone specified by the manufacturer.

"In accordance with the intended use" includes adhering to regulations for occupational safety, safety, waste disposal and correct and safe maintenance and/or repair work.

2.2. Applications Not in Accordance With the Intended Use

Any usage for other tasks, such as:

- Operation with technical data such as flow rate, loading, operating temperature, operating voltage, hazardous zone etc. that has not been agreed
- Operation without the intended safety devices (machine covers, covers on maintenance openings, covers for terminal boxes of the electrical items of equipment and of local control points or connection boxes on site, etc.)
- Use of cleaning liquids which attack the specified materials of which the machine is made

These count as applications not in accordance with the intended use. The user alone carries the risk for injury to people, damage to other material assets, to the machine, or regarding operating performance.

2.3. Transport

Immediately after the machine has arrived, it must be checked for possible transport damage.

Transport damage must be noted down / recorded with:
- Polaroid photo
- Sketch by hand
- Description (report)
- Transport damage must be reported immediately both in verbal and written form

Manual unloading or transporting is not permitted. There is an increased risk of accidents!

Only approved and suitable lifting devices may be used.

If the Filterscreen is not deposited directly at the place planned for it, it must be deposited on even ground or on suitable vehicles and safeguarded against slipping.

Packing equipment is not returnable. Disposal must by carried out at the consignee according to the regulations.

2.4. Installation

Installation should only be carried out by trained staff of contracting company. They carry responsibility for the entire risk, and are liable for all possible resultant damages.

The installation sequence and execution depends on the structural conditions on site. The following procedure should be followed:

- Fit the control cabinet outside the hazardous area (during installation of the machine, the power supply can be set up)
- Lifting and shifting the machine may only be carried out with approved lifting devices at the lifting eyes provided
- Align the machine in accordance with erection drawing (shim if necessary)
- Anchor the Filterscreen
- Carry out cabling between electric units and control cabinet (generally provided by customer)
- Connect industrial water or fresh water (generally provided by customer)
  - If the washing unit is connected to a drinking water supply, the local regulations must be observed

3. Malfunctioning of Filterscreen

The following descriptions of malfunctioning are intended to help the operator to analyse the cause of a fault, and to correct it.

Even if the unit runs faultlessly and without giving warning or alarm signals, operating states can occur which make it necessary for the operator to take some action. The following sections describe the most important types of malfunction.

3.3. Types of Fault: Filterscreen

The following effects must be considered:

a. Inefficient cleaning of the screen panels

b. Screen drive does not switch on

c. Screen drive rotates, but no transport of screenings (filter belt or screen panels stationary)

d. Flow of contaminent particles through the Filterscreen

e. No water for spray pipe

3.4. Malfunctioning, Types of Fault, Remedies: Filterscreen

The following descriptions of malfunctioning are intended to help the operator to analyse the cause of the fault and to eliminate it.

Filterscreen

Fault: Inefficient cleaning of the screen panels

Item	Possible cause	Fault analysis	Remedy
1	rotary brush worn out	inspection on site	manufacturer, replace brush segments
2	spraying unit jets blocked	inspection on site	clean jet tube and jets
3	contact pressure of the rotary brush on the screen panels too low	inspection on site	reset brush
4	brush drive faulty	inspection on site	manufacturer replace brush drive
5	spraying unit faulty	inspection on site	manufacturer
6	spraying unit faulty	inspection on site	check solenoid valve

Filterscreen

Fault: Screen drive does not switch on

Item	Possible cause	Fault analysis	Remedy
1	electric motor	winding faulty	manufacturer, replace electric motor
2	motor protection switch	triggered protection switch	Switch on motor protection switch in control cabinet at local operating panel
3	emergency stop button	emergency stop button triggered, check function	pull out emergency stop button
4	motor protection switch	repeated triggering of motor protection switch Filterscreen is jammed by bulky material	Lockout: Remove covers Check for oversized material and remove
5	housing of Filterscreen faulty	inspection on site	manufacturer
6	motor protection switch	repeated triggering of motor protection switch, drive blocked, faulty gearbox	Lockout: check oil level in worm gear box, replace worm gear box. Restart machine. Recheck amperage
7	motor protection switch	repeated triggering of motor protection switch,	Filter panel jammed by bottom brush: Lockout. Divert & drain channel. Visual inspect and replace brush as required.
8	motor protection switch	repeated triggering of motor protection switch,	screen panel faulty, jamming filter belt. Lockout: Remove cover, visual inspect and replace panels as required.

Filterscreen

Fault: Screen drive rotates but no transport of the sreenings (filter belt or screen panels stationary)

Item	Possible cause	Fault analysis	Remedy
1	motor shaft faulty	dismantle cover, inspection on site	manufacturer, replace motor shaft
2	chain wheels worn out	inspection on site	manufacturer, replace chain wheels
3	drive chain broken	inspection on site	manufacturer, fit new chain links
4	locking assemblies loose	dismantle covers, inspection on site	tighten locking assem-blies with socket head spanner
5	locking assemblies faulty	inspection on site	manufacturer, fit new locking assemblies

Filterscreen

Fault: Flow of contaminant particles through Filterscreen

Pos.	Possible cause	Fault analysis	Remedy
1	bottom brush torn off	inspection on site	replace bottom brush
2	bottom brush worn out	inspection on site	readjust or replace bottom brush
3	side seal torn off	inspection on site	replace side seal
4	side seal worn out	inspection on site	replace side seal
5	screen panel faulty	inspection on site	manufacturer, fit new screen panel

Filterscreen

Fault: No water for spraying pipe, Filterscreen

Item.	Possible cause	Fault analisis	Remedy
1	process water pump faulty	inspection on site	manufacturer, replace pump
2	ball cock, water supply pipe closed	inspection on site	open ball cock
3	jets of spraying pipe clogged	inspection on site	clean jets
4	solenoid valve clogged	inspection on site	clean solenoid valve

4. Maintenance / Inspection of Filterscreen

The intervals stated and their contents apply to 50% operating factor. This schedule represents the minimum required maintenance, which may need to be performed at shorter intervals, depending on the operating conditions on site, or to situations of increased loading.

Maintenance must be performed at the suggested calendrical interval or the operating hours interval, whichever is reached first.

All maintenance work which is scheduled for a shorter interval must always be carried out when maintenance is due.

Parts subject to wear must be replaced when they have reached the limit of wear.

The following intervals for operating hours is for 50% operating factor:

d = daily	(or every 12 operating hours)
w = weekly	(or every 85 operating hours)
m = monthly	(or every 360 operating hours)
q = quarterly	(or every 1080 operating hours)
6m = every 6 months	(or every 2160 operating hours)
y = yearly	(or every 4320 operating hours).

A daily inspection of the screening unit is necessary.

4.3. Important Maintenance Work: Filterscreen

Gearbox	Oil change	Once per year
Brush Shaft Bearing	Grease	4 times per year
Upper Bearing (Tensioning Bearing)	Grease	4 times per year
Lower Bearing (Standard Bearing)	Grease	Twice per week
Chains	During operation, spray chains from the side with chain spray through inspection window. Spray Upper Curved Brush with Molybdenum Chain Spray	Once per month

Maintenance / Inspection Filterscreen

The screening plant has to be controlled every day.

Units	Filterscreen FRS					
Measure / Intervals of time	d	w	m	q	6m	y
Inspections	X					
leakages housing		X				
tightness of bolts					X	
smoothness of running		X				
ball cock					X	
corrosion						X
damage		X				
rotary brush			X			
spraying pipe				X		
bottom brush and side brushes				X		
chain wheels and chain tension				X		
Maintenance						
cleaning with high press cleaner outside				X		
cleaning filter panels				X		
cleaning wiper			X			
greasing plain bearing lower chain wheel		2x				
greasing brush shaft bearing				X		
greasing upper chain wheel (tensioning bearing)				X		
oil change, gearbox						X
resetting rotary brush				X		
corrosion prevention in case of damage						X
spray chains with chain spray			X			
Checking						
electrical controls						X
emergency stop button				X		
mechanical equipment						X
all fasteners for tightness		X				

Filterscreen drive and brush drive

Make: SEW
Oil change and quality of oil in accordance with SEW operating instruction.

Pressure of rotary brush roller on filter belt

Depending on the operating time, the rotary brush is subject to certain wear and must be reset.
This ensures reliable brushing of the screenings off the filter panels.

Procedure:
Loosen bolts on either side of bearing plate of brush roller bearing slightly (not on bearing itself).

Slide bearing plate evenly about 3 to 5 mm in filter belt direction. Do not overadjust the brush!! – the end of the brush bristles should just touch the filter panel effectively removing screenings from the face of the filter panels with quick light strokes. Very important that the bristles are not bent – this will greatly reduce the cleaning efficiency of the brush and may cause a brush motor overload condition.

After readjusting, tighten up bolts on both sides.

Chains on filter belt

The chain strands become elongated in the course of running. If this elongation becomes pronounced, both chain strands must be retightened in equal measure to prevent damage to screen chain and sprockets.

Procedure:

!!!NOTE!!! VERY IMPORTANT TO FOLLOW INSTRUCTIONS!!!!

CHAIN TENSIONING PROCEDURE

The recommended factory procedure for tensioning the FRS perforated filter screen chain is as follows:

1. Check that the filter band is not moving to one side. This is achieved by looking at the drive sprockets to verify that the chain is not running to one side. If the chain is running out, that is not centered than you have to slacken the tension on the high side sprocket using the tensioning assembly provided for this purpose by letting the screen run and make a half turn on the nut of the tensioning bearing, wait 1 minute to allow the filter band chain to adjust. Repeat this adjustment procedure till the filter band chain is running in the middle between the upper sprockets.

The following adjustments have to be done exactly same on both sides of the screen!!!

2. Additional adjustments to chain tension as follows:
   2.1. On engagement of the screen chain in the sprocket, the screen chain bushings will follow the contour of the sprocket groove, and bottom out in the groove before moving smoothly out of the groove without touching the opposite groove slope. NOTE: The chain bushing will initially engage the sprocket groove slope, while moving to the bottom of the drive sprocket groove.
   2.2. As the chain is moving out of the upper sprockets on the downstream side of the screen the chain and filter band will be lifted up and down (chain *amplitude) off the downstream delrin chain support. The chain must be adjusted so the amplitude of the chain is not greater than about approx. 5 mm (~1/4") in either direction. If the chain tension is too tight or too loose than the chain amplitude will be greater than 5mm (~1/4") and the chain will be hanging in the sprocket and snapping out of the sprocket groove causing premature wear.
   2.3. At the bottom of the downstream side of the screen there is a cut-out in the frame where the chain can be viewed. At this point the chain and filter band can have a little slack but is not to be allowed to hang out of the screen frame and the filter panels should not touch lower curved section where the lower chain guides are located.

*Amplitude: Range of chain movement from its centerline in both directions. The motion of the chain rising and falling as it is released from the drive disc as it descends away the drive disc on the downstream side of the screen. The movement of the chain should not be more than 5mm (~1/4") in either direction.

Care of Chains

Spray both chains once a month during running with a suitable chain spray (e.g. KAL-GARD – CHAIN KOTE). The chain spray must be sprayed onto the chains from the side through inspection window. This keeps the chains flexible and helps to prevent corrosion. Also spray the upper curved brush that rides against the chain with Chain Kote – this will lubricate the chain as the chain passes through the brushes.

Top and Bottom Chain Sprocket Bearings

Lubricate both top bearings (tensioning bearings) twice a year with a suitable grease, e.g. Shell Retinex LC or equivalent.

The bottom chain sprockets are submerged in water and fitted with plain bearing bushes. Lubricating must be carried out twice a week with suitable grease, e.g. Shell Retinex LC or equivalent via high-pressure grease nipples. The grease nipples are located below the inspection door (right and left).

Screen Panels

For screen panels which have to be removed for repair or maintenance work it is **essential** when refitting to **always** use **new** self-locking nuts.
Used nuts can loosen and cause damage.

Cleaning Screen Panels

In spite of the rotating brush roller providing effective cleaning of the screen panel, it is advisable to set the run-out time of the solenoid valve, Filterscreen in the control cabinet to about 5 sec. after the motors have started.

Bottom and Side Sealing of Filter Belt

Bottom brushes, which are protected with rubber plates are mounted for lower sealing. For side sealing there are resetable plastic strips. To ensure proper cleaning of the Filterscreen, the set of seals should be replaced after several years of operation (depending on operating time).
We recommend having this maintenance work carried out by service engineers.

Chain Support

As chain support there are plastic strips mounted, which have a wear life. To ensure the function of the screen, the strips should be replaced after several years of operation (depending on operating time).
We recommend having this maintenance work carried out by service engineers.

5. Spare Parts

See Spare Parts section in the project manual for recommended spare parts list and ordering instructions.

SPARE PARTS LIST

Filterscreen

Item	Description
1	Filterscreen drive
2	Torque arm for Filterscreen drive
3	Bearing block, torque arm
4	Tensioning bearing
5	Drive shaft
6	Brush drive
7	Torque arm for brush drive
8	Bearings for brush shaft
9	Brush shaft
10	Upper chainwheel
11	Locking assembly for chainwheel
12	Lower chainwheel
13	Bearing journal
14	Circlip
15	V-Ring (truarc inverted ring)
16	O-Ring
17	Cover
18	Chain
19	Chain support
20	Screen panel
21	Hardware for screen
22	Spraying unit
23	1 set curved brushes
24	1 set side sealing
25	1 round brushes
26	1 bottom brush
27	Scrapper roll drive
28	Torque arm for scrapper roll drive
29	Bearings for scrapper roll drive
30	Scrapper roll

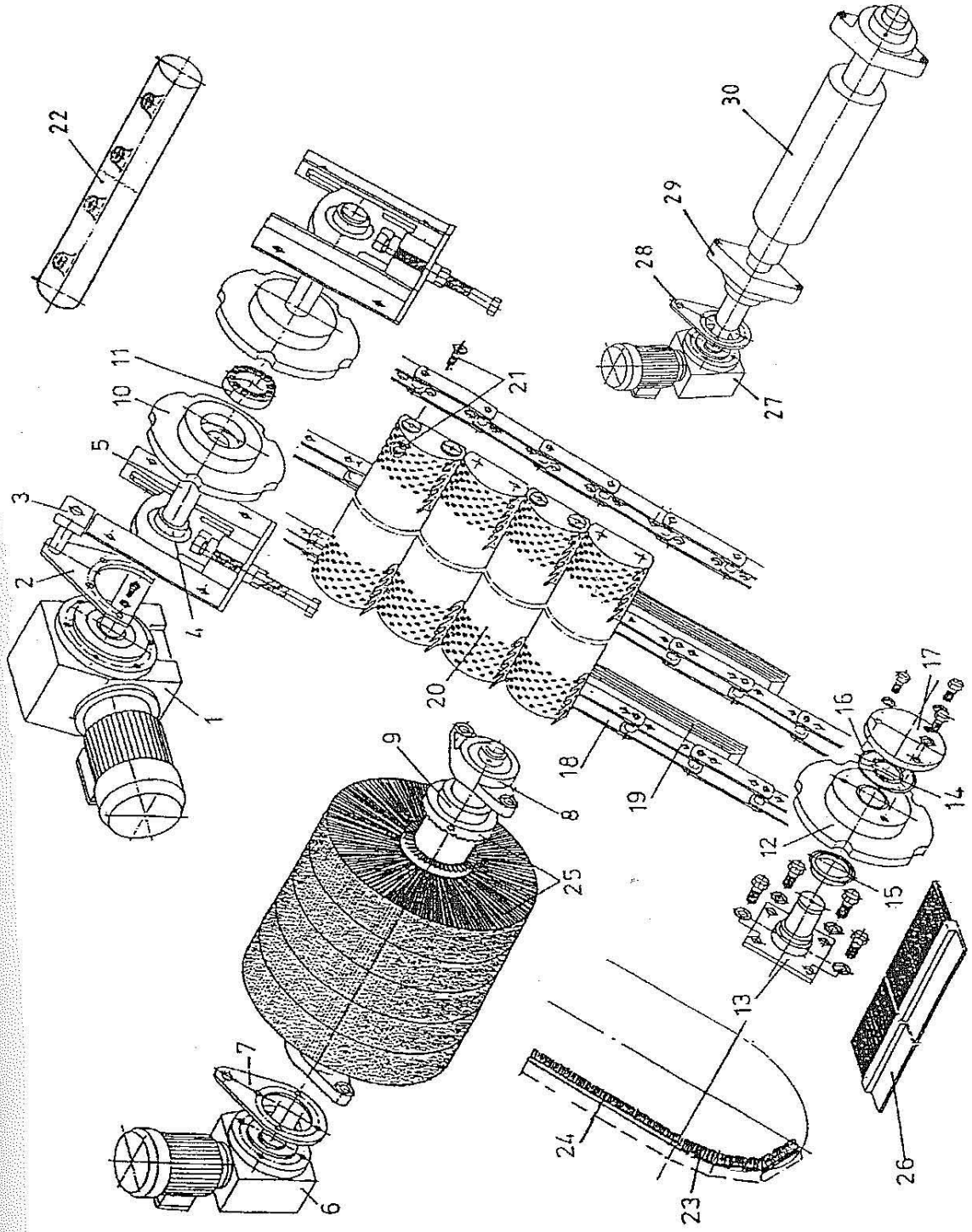
1
2
3
4
5
6
7
8
9
10
11
12
13
14
15
16
17
18
19
20
21
22
23
24
25
26
27
28
29
30

6. Faults - causes and remedies

6.3. Filterscreen jammed

Hose down sand and stones in brush bed thoroughly and remove stones.

6.4. Delrin support worn out

Replace worn delrin support as described in Section 7.

6.5. Chain damaged

Replace resp. repair damaged chain as described in Section 7.

6.6. Damaged panel screens

Replace damaged screen panel as described in Section 7.

6.7. Bottom chain sprocket is defective

Replace as described in Section 7. The moderation of the bearing has to be checked when assembling the sprocket. The bearing should be replaced each time a chain sprocket is changed.

6.8. Top chain sprocket is defective

Replace as described in Section 7.

6.9. Drive shaft is defective

Replace as described in Section 7.

6.10. Brush shaft is defective

Replace as described in Section 7.

6.11. Changing bottom brushes

Replace as described in Section 7.

6.12. Side seal

Replace as described in Section 7.

6.13. Curve seal

Replace as described in Section 7.

7. Assembling and Disassembling Filterscreen

7.3. Screen panels

Before beginning any fitting work, the filter screening plant must be switched off at the control cabinet and the emergency stop operated at the local control point.
Remove hood and covers of the Filterscreen.

Move two screen panels to the inspection door, detach the self-locking nuts at the chains and take the screen panels out through the inspection door.
Repeat this operation until all screen panels have been removed.

Fit new screen panels in the reverse order.
CAUTION: Use new nuts when refitting the screen panels!

7.4. Delrin supports

Before beginning any fitting work, the filter screening plant must be switched off at the control cabinet and the emergency stop operated at the local control point. Afterwards the hood and covers of the Filterscreen have to be removed and the installations hatches on the left and on the right have to be opened by removing 4 machine knob screws on every side.

Filterscreens have to be disassembled as described in this section.

Unscrew the bolts of the worn delrin supports and remove the delrin supports.
Make holes in the new delrin supports for the screw fittings in accordance using the items which have been removed as patterns and fit the new supports. Check the chainwheels for bearing damage during this operation.

Assemble the Filterscreens as described in this section.

CAUTION: Use new nuts and lock washers when refitting the screen panels!

7.5. Disassembling chains

Before beginning any fitting work, the filter screening plant must be switched off at the control cabinet and the emergency stop operated at the local control point.

Remove hood and covers of the Filterscreen.

Take tension off the chains at the tensioning bearings. Remove circlip from pin at cranked chain connector. The chain connectors are situated at the same height in each of the strands.

Remove chain or part of chain. If the chain is faulty, parts can be replaced. For this purpose, special pins must be used which can be fitted. Fit length of chain and insert pins.

Slide circlips onto pins again.

CHAIN TENSIONING PROCEDURE

The recommended factory procedure for tensioning the FSM perforated filter screen chain is as follows:

1. Check that the filter band is not moving to one side. This is achieved by looking at the drive sprockets to verify that the chain is not running to one side. If the chain is running out, that is not centered than you have to slacken the tension on the high side sprocket using the tensioning assembly provided for this purpose by letting the screen run and make a half turn on the nut of the tensioning bearing, wait 1 minute to allow the filter band chain to adjust. Repeat this adjustment procedure till the filter band chain is running in the middle between the upper sprockets.

The following adjustments have to be done exactly same on both sides of the screen!!!

2. Additional adjustments to chain tension as follows:
   2.1. On engagement of the screen chain in the sprocket, the screen chain bushings will follow the contour of the sprocket groove, and bottom out in the groove before moving smoothly out of the groove without touching the opposite groove slope. NOTE: The chain bushing will initially engage the

sprocket groove slope, while moving to the bottom of the drive sprocket groove.

2.2. As the chain is moving out of the upper sprockets on the downstream side of the screen the chain and filter band will be lifted up and down (chain *amplitude) off the downstream delrin chain support. The chain must be adjusted so the amplitude of the chain is not greater than about approx. 5 mm (~1/4") in either direction. If the chain tension is too tight or too loose than the chain amplitude will be greater than 5mm (~1/4") and the chain will be hanging in the sprocket and snapping out of the sprocket groove causing premature wear.

2.3. At the bottom of the downstream side of the screen there is a cut-out in the frame where the chain can be viewed. At this point the chain and filter band can have a little slack but is not to be allowed to hang out of the screen frame and the filter panels should not touch lower curved section where the lower chain guides are located.

*Amplitude: Range of chain movement from its centerline in both directions. The motion of the chain rising and falling as it is released from the drive disc as it descends away the drive disc on the downstream side of the screen. The movement of the chain should not be more than 5mm (~1/4") in either direction.

7.6. Lower chainwheel

Before beginning any fitting work, the filter screening plant must be switched off at the control cabinet and the emergency stop operated at the local control point. Remove hood and covers of the Filterscreen.

Move two screen panels to the inspection door, detach the self-locking nuts at the chains and take the screen panels out through the inspection door.
Repeat this operation until all screen panels have been removed.

Take tension off the chains at the tensioning bearings. Remove circlip from pin at cranked chain connector. The chain connectors are situated at the same height in each of the strands.

The chainwheel complete with journals can be removed by unscrewing the 4 bolts at the bearing journal plate.

Detach the bearing cap from the chainwheel. Then remove the circlip using special tool.

Pull the chainwheel off the shaft. Assemble the unit in the reverse order.

CAUTION: Use new nuts when refitting the screen panels!

7.7. Upper chainwheel

Before beginning any fitting work, the filter screening plant must be switched off at the control cabinet and the emergency stop operated at the local control point.
Remove hood and covers of the Filterscreen.

Move two screen panels to the inspection door, detach the self-locking nuts at the chains and take the screen panels out through the inspection door.
Repeat this operation until all screen panels have been removed. In certain cases it is not necessary to dismantle the screen panels completely.

Take tension off the chains at the tensioning bearings. Remove circlip from pin at cranked chain connector. The chain connectors are situated at the same height in each of the strands.

Withdraw drive motor with torque arm from the drive shaft.

Clean drive shaft and loosen locking assemblies. Secure drive shaft with a crane.
Unscrew hex-socket setscrews with cone point near shaft.
Detach bolts of both tensioning bearings. Carefully withdraw both tensioning bearings.
Carefully lift the drive shaft with the chainwheels out of the Filterscreen housing.

Assembly
When assembling, pay special attention that the chainwheels are in line and that they run parallel to one another. This can be checked visually using a pipe laid onto the recesses of the chainwheels.
The assembly dimension is chainwheel centres Filterscreen width + 26 mm.
The unit can be reassembled as described in the reverse order.
NOTE: Chain tension and alignment must be performed to complete the work – see tensioning information in this section for detailed instructions.

7.8. Drive shaft

Before beginning any fitting work, the filter screening plant must be switched off at the control cabinet and the emergency stop operated at the local control point.
Remove hood and covers of the Filterscreen.

Move two screen panels to the inspection door, detach the self-locking nuts at the chains and take the screen panels out through the inspection door.
Repeat this operation until all screen panels have been removed. In certain cases it is not necessary to dismantle the screen panels completely.

Take tension off the chains at the tensioning bearings. Remove circlip from pin at cranked chain connector. The chain connectors are situated at the same height in each of the strands.

Withdraw drive motor with torque arm from the drive shaft.

Clean drive shaft and loosen locking assemblies. Secure drive shaft with a crane. Unscrew hex-socket setscrews with cone point near shaft.
Detach bolts of both tensioning bearings. Carefully withdraw both tensioning bearings.
Carefully lift the drive shaft with the chainwheels out of the Filterscreen housing.

Assembly
When assembling, pay special attention that the chainwheels are in line and that they run parallel to one another. This can be checked visually using a pipe laid onto the recesses of the chainwheels.
The assembly dimension is chainwheel centres Filterscreen width + 26 mm.
The unit can be reassembled as described in the reverse order.
NOTE: Chain tension and alignment must be performed to complete the work – see tensioning information in this section for detailed instructions.

7.9. Brush shaft

Before beginning any fitting work, the filter screening plant must be switched off at the control cabinet and the emergency stop operated at the local control point.
Remove hood and covers of the Filterscreen.

Withdraw drive motor with torque arm from the drive shaft.
Clean brush shaft and secure with a crane.
Unscrew the bolts at both brush shaft bearings.

Unscrew hex-socket setscrews with cone near shaft.
Withdraw both brush shaft bearings.
Carefully lift the brush shaft with the rotary brush out of the Filterscreen housing.

Unscrew hex-socket setscrews with cone point with an allen key at the setting collar for adjustment of the rotary brush. After the setting collar has been withdrawn, the round brush segments can be pulled off the brush shaft.

Reassemble the unit in the reverse order.

7.10. Tensioning bearings

Before beginning any fitting work, the filter screening plant must be switched off at the control cabinet and the emergency stop operated at the local control point.
Remove hood and covers of the Filterscreen.

Withdraw drive motor with torque arm from the drive shaft.

Clean drive shaft and loosen locking assemblies. Secure drive shaft with a crane.
Unscrew hex-socket setscrews with cone point near shaft.
Detach bolts of both tensioning bearings, carefully withdraw both tensioning bearings.

Reassemble the unit in the reverse order.

7.11. Drive motor

Before beginning any fitting work, the filter screening plant must be switched off at the control cabinet and the emergency stop operated at the local control point.

Withdraw drive motor with torque arm from the drive shaft.

Reassemble the unit in the reverse order.

7.12. Brush motor

Before beginning any fitting work, the filter screening plant must be switched off at the control cabinet and the emergency stop operated at the local control point.

Withdraw brush motor with torque arm from the drive shaft.

Reassemble the unit in the reverse order.

7.13. Rotary brushes

Before beginning any fitting work, the filter screening plant must be switched off at the control cabinet and the emergency stop operated at the local control point.
Remove hood and covers of the Filterscreen.
See disassembly drive shaft.

7.14. Locking assembly, upper chainwheel

Before beginning any fitting work, the filter screening plant must be switched off at the control cabinet and the emergency stop operated at the local control point.
Remove hood and covers of the Filterscreen.

Move two screen panels to the inspection door, detach the self-locking nuts at the chains and take the screen panels out through the inspection door.
Repeat this operation until all screen panels have been removed. In certain cases it is not necessary to dismantle the screen panels completely.

Take tension off the chains at the tensioning bearings. Remove circlip from pin at cranked chain connector. The chain connectors are situated at the same height in each of the strands.

Withdraw drive motor with torque arm from the drive shaft.

Clean drive shaft and loosen locking assemblies. Secure drive shaft with a crane.
Unscrew hex-socket setscrews with cone point near shaft.
Detach bolts of both tensioning bearings. Carefully withdraw both tensioning bearings.
Carefully lift the drive shaft with the chainwheels out of the Filterscreen housing.
Loosen locking assemblies completely and withdraw chainwheels from the drive shaft.

Assembly
When assembling, pay special attention that the chainwheels are in line and that they run parallel to one another. This can be checked visually using a pipe laid onto the recesses of the chainwheels.
The assembly dimension is chainwheel centres Filterscreen width + 26 mm.
The unit can be reassembled as described, but in the reverse order.
NOTE: Chain tension and alignment must be performed to complete the work – see tensioning information in this section for detailed instructions.

7.15. Bearing journals, lower chainwheels

Before beginning any fitting work, the filter screening plant must be switched off at the control cabinet and the emergency stop operated at the local control point.
Remove hood and covers of the Filterscreen.

Move two screen panels to the inspection door, detach the self-locking nuts at the chains and take the screen panels out through the inspection door.
Repeat this operation until all screen panels have been removed. In certain cases, it is not necessary to disassemble all screen panels.

Take tension off the chains at the tensioning bearings. Remove circlip from pin at cranked chain connector. The chain connectors are situated at the same height in each of the strands.

The chainwheel complete with journals can be removed by unscrewing the 4 bolts at the bearing journal plate.

Detach the bearing cap from the chainwheel. Then remove the circlip using special tool.
Pull the chainwheel off the shaft.
Assemble the unit in the reverse order.
NOTE: Chain tension and alignment must be performed to complete the work – see tensioning information in this section for detailed instructions.

CAUTION: Use new nuts when refitting the screen panels!

7.16. Side seal

Before beginning any fitting work, the filter screening plant must be switched off at the control cabinet and the emergency stop operated at the local control point.

Five Filterscreens have to be disassembled like described in this section.
Unscrew the bolts at the Filterscreen frame. Move the side seal towards the inside of the Filterscreen and remove them from the unit.
When reassembling the side seal they have to be so near at the filter belt that there is a free space of 1-2 mm.

7.17. Bottom brush

Before beginning any fitting work, the filter screening plant must be switched off at the control cabinet and the emergency stop operated at the local control point.

Unscrew the bolts at the bottom brush and remove brush.
When fitting a new bottom brush, make slotted holes in the plastic mounting with a drill and hacksaw.
Bolt bottom brush to the brush mounting.

7.18. Curved seal

Before beginning any fitting work, the filter screening plant must be switched off at the control cabinet and the emergency stop operated at the local control point.

Five Filterscreens have to be disassembled like described in this section.
Unscrew the bolts of the lower side seal at the filter screen frame. Move the lower side seal towards the inside of the filter screen and remove them from the unit.

Assembling in reverse order.

8. Safety Precautions

Before starting work on the Filterscreen, always operate EMERGENCY STOP BUTTON and set the controls at the control cabinet to OFF (0).

NEVER put your hand into moving parts!

Please read these operating instructions carefully through before starting up and before carrying out any fitting or maintenance work!!!

- Live parts and rotating parts of electrical machinery can cause serious and fatal injuries!

– Make sure that you never start up damaged equipment

– Erection, connecting up, starting up, maintenance and repair work must only be carried out by qualified skilled staff, taking the following into account:

- these instructions
- all other commissioning instructions and circuit diagrams
- the current valid national/regional regulations (safety/accident)

– confirm that the mains voltage agrees with the data on the nameplate

- Operation, maintenance and erection may only be carried out by the:

- person charged with the job
- person who has been trained for the job
- person who knows the regulations

- When working on electrical equipment, the power must be disconnected

- When working on the control cabinet, the power must be turned off

- When working on the Filterscreen, a sign must be clearly displayed to prevent the machine from being operated by unauthorised people.

- Safety instructions of individual manufacturers must be adhered to.

- Do not stand in dangerous areas

- Never put your hand into moving parts

- Defects must be remedied immediately and correctly

- Before starting up, the plant must be checked by a competent person

- When working with different materials, attention must be paid to galvanic separation

- Inspection and maintenance intervals must be strictly adhered to

- To ensure correct operation, only use original accessories and spare parts,

- When working on parts which come into contact with the medium, protective gloves and protective goggles must be worn

- If you come into contact with the medium, the affected part must be sterilised immediately.

-Only use lifting gear which meets the requirements.

Health protection: Observe working safety reguations in the general use of lubrications! See safety data sheet.

WASTE▪TECH
a division of KUSTERS ZIMA

4.6

HIGH LEVEL FLOAT SWITCH

ENGINEERING SUBMITTAL

WENATCHEE WWTP IMPROVEMENTS

NON-MERCURY FLOAT SWITCH

Manufacturer:	Conery Mfg. Inc.
Model no.:	2900-B3-S1-C3 (Mercury-free)
Contacts:	Normally Open
Electrical Rating:	10A @ 120VAC
Float Switch Actuation Angle:	5 degrees above horizontal
Temperature Range:	32º - 190ºF

CONERY™ MFG INC

Control Duty Mechanical Narrow Angle Switch

Designed for accurate liquid level control in many applications including potable water or sewage environments. The float switch can be utilized to signify specific water levels or for direct alarm actuation.

The mechanically activated micro switch is designed to operate under a min/max temperature of 32-190° F, and has an electrical rating of 10 AMPS @ 120 VAC or 5 AMPS @ 240 VAC. The power cord is a chlorinated polyethylene type SJOOW-300 Volt on 16/2 for N/O or N/C switch or 16/3 for SPDT switch.

The float is constructed of a durable ABS material, and is tested and proven to be leak proof, shock proof, and impact resistant. The cord weight is made of zinc plated cast iron. At 1.22 lbs. the split weight design allows for easy adjustment, and a secure and permanent attachment to the cord.

NORMALLY OPEN (N/O)

As the float rises 1" (5°) above horizontal, the contacts become closed and actuate (turn on) the switch. This float is generally used in pump down applications.

NORMALLY CLOSED (N/C)

As the float rises 1" (5°) above horizontal, the contacts become open and actuate (turn off) the switch. This float is generally used in pump up applications.

SINGLE POLE, DOUBLE THROW (SPDT)

A variation of the N/O & N/C, this float switch can be wired to operate as either (but not both) a normally open or a normally closed switch based on the user's need.

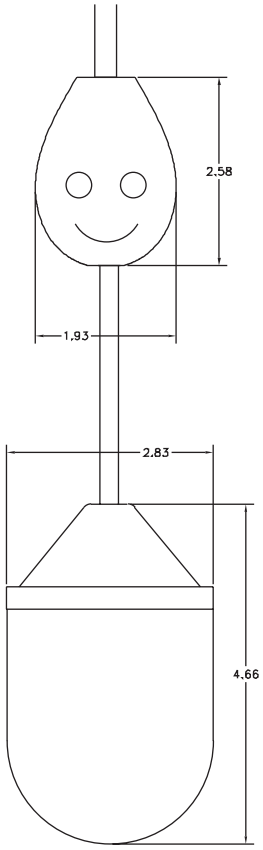

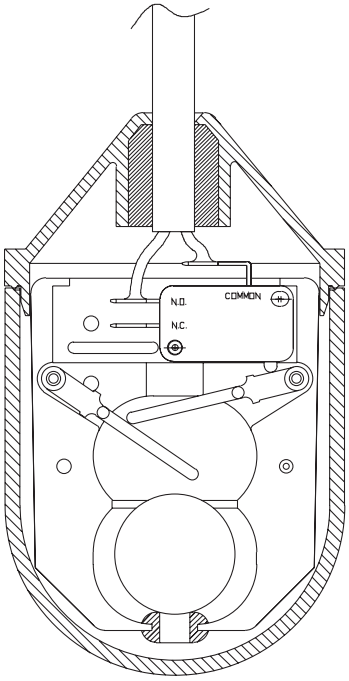

Download a variety of files from www.conerymfg.com

Tel: 419-289-1444 • Fax: 419-281-0366 • Email: info@conerymfg.com

Control Duty Mechanical Narrow Angle Switch

Normally open control duty float switch

Single pole - single throw

10 AMP @ 120 VAC narrow angle mechanical switch		10′	15′	20′	25′	30′	40′	50′
2900 - B3-S1	Mechanical (Mch) bulb	$30.50	$32.50	$36.50	$40.50	$44.50	$52.50	$60.50
2900 - B3-S1-C1	Mch bulb w/cord weight	$35.00	$37.00	$41.00	$45.00	$49.00	$57.00	$65.00
2900 - B3-S1-C3	Mch bulb w/clamp - stainless band	$34.00	$36.00	$40.00	$44.00	$48.00	$56.00	$64.00
2900 - B3-S1-C4	Mch bulb w/releasable tie strap	$33.00	$35.00	$39.00	$43.00	$47.00	$55.00	$63.00

Normally closed control duty float switch

Single pole - single throw

10 AMP @ 120 VAC narrow angle mechanical switch		10′	15′	20′	25′	30′	40′	50′
2901 - B3-S1	Mechanical (Mch) bulb	$30.50	$32.50	$36.50	$40.50	$44.50	$52.50	$60.50
2901 - B3-S1-C1	Mch bulb w/cord weight	$35.00	$37.00	$41.00	$45.00	$49.00	$57.00	$65.00
2901 - B3-S1-C3	Mch bulb w/clamp - stainless band	$34.00	$36.00	$40.00	$44.00	$48.00	$56.00	$64.00
2901 - B3-S1-C4	Mch bulb w/releasable tie strap	$33.00	$35.00	$39.00	$43.00	$47.00	$55.00	$63.00

Normally open/closed control duty float switch

Single pole - double throw (SPDT)

10 AMP @ 120 VAC narrow angle mechanical switch		10′	15′	20′	25′	30′	40′	50′
2902 - B3-S2	Mechanical (Mch) bulb	$43.50	$45.50	$52.00	$58.50	$65.00	$78.00	$91.00
2902 - B3-S2-C1	Mch bulb w/cord weight	$48.00	$50.00	$56.50	$63.00	$69.50	$82.50	$95.50
2902 - B3-S2-C3	Mch bulb w/clamp - stainless band	$47.00	$49.00	$55.50	$62.00	$68.50	$81.50	$94.50
2902 - B3-S2-C4	Mch bulb w/releasable tie strap	$46.00	$48.00	$54.50	$61.00	$67.50	$80.50	$93.50

Additional float switch options
packaging options

Bulk boxed - standard
K1 Individually boxed ADD $1.25 to list price per float switch
K2 Individually bagged ADD $1.00 to list price float switch

Cable length options

S1 Additional cable lengths ADD $4.00 to list price per float switch per 5′
S2 Additional cable lengths ADD $6.50 to list price per float switch per 5′

2900 MULTI FLOAT SYSTEM

A typical simplex pump installation showing a pump on and off float with a high water alarm float. (A duplex station would have four floats). All pump cords are connected in the Junction Box , with wiring going to the control panel at another location. The #2900 float switches will control all types of pumps.

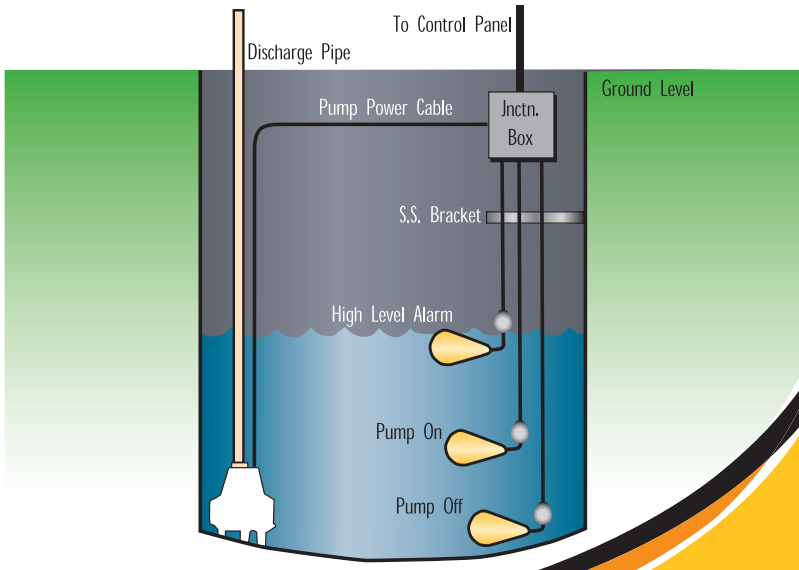

SECTION 5

SCREENINGS WASHER PRESS

WASTE▪TECH
a division of KUSTERS ZIMA

5.1

TECHNICAL DATA

OPERATION & MAINTENANCE

WENATCHEE WWTP IMPROVEMENTS
PROJECT PO913
WENATCHEE, WA

SECTION 11092 – PERFORATED PLATE SCREENS
SECTION 11095 – SCREENINGS WASHER COMPACTOR

SCREENINGS WASHER PRESS TECHNICAL DATA

No. of Washer Compactors:	2
Minimum compacted screenings volume:	10 CF/hour
Minimum screenings volume reduction:	70%
Minimum removal of organic constituents:	90%
Minimum solid concentration:	50%
Screw diameter:	8” Nominal
Motor:	2 HP
Drive unit:	Helical Gear Reducer, Manufacturer SEW
Wash Water Connection/Requirement, each:	1” NPT / 30 gpm at 40 psi
Drain Perforation Diameter:	5 mm

SCREENINGS WASHER PRESS MATERIALS OF CONSTRUCTION

Screw Body, Trough and End Plates:	316L Stainless Steel; ⅜” Thick
Inlet and Outlet Flange:	316L Stainless Steel; ¾” Thick Plate
Drainage Collection Pan:	316L Stainless Steel; 6” Plain End Pipe Connection
Supports:	316L Stainless Steel; ⅜” Thick Plate
Inlet Chute Hopper:	316L Stainless Steel; 14 Gauge Thick
Discharge Piping:	316L Stainless Steel; 10 Gauge Thick
Splash Guard (Removable)	316L Stainless Steel; 10 Gauge Thick
Screw shaft:	C45 Special Steel
Screw flights:	Hardox 400 Special Steel
Flight brushes:	Nylon with Stainless Steel backing
Hardware:	316 Stainless Steel

WASTE▪TECH
a division of KUSTERS ZIMA

5.2

GEAR REDUCER & MOTOR DETAILS

ENGINEERING SUBMITTAL

WENATCHEE WWTP IMPROVEMENTS

GEAR REDUCER DETAILS - SPW200 DRIVE

Manufacturer:	SEW Eurodrive
Model Number:	FAF87 with AM145 adaptor
Type:	Helical Bevel Double Reduction Speed Reducer
Ratio:	228.93:1
Output RPM (at 1800RPM input):	8 RPM
Service Factor:	1.5
Weight:	267 lbs
Motor Mounting:	C-face, AM145 adaptor

MOTOR DETAILS - SPW200 DRIVE

Manufacturer:	TECO Westinghouse
Model Number:	EPV0024C
Horsepower:	2 HP
Voltage:	230-460 VAC/3ph/60Hz
Full Load Amperage:	2.78 A @ 460VAC
Type:	TEFC, C-face
RPM:	1800
Nominal Efficiency:	86.5%
NEMA Design:	C
Insulation:	F
Weight:	65 lbs
Service Factor:	1.15
Frame/Mounting:	145TC

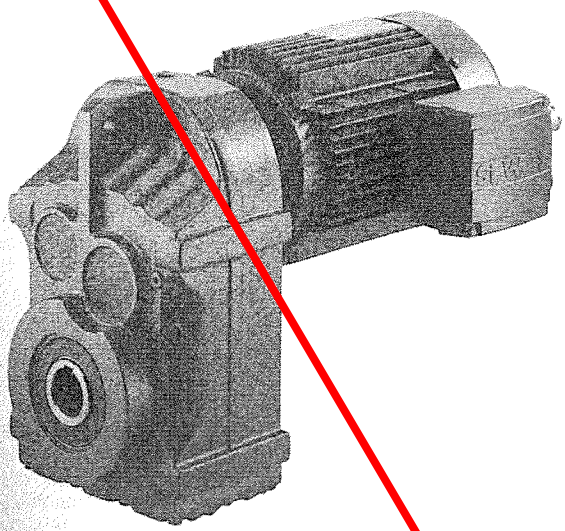

FA..DT../DV..

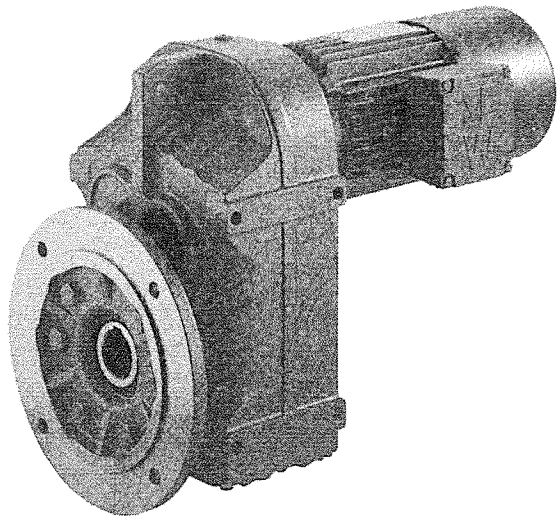

FAF..DT../DV..

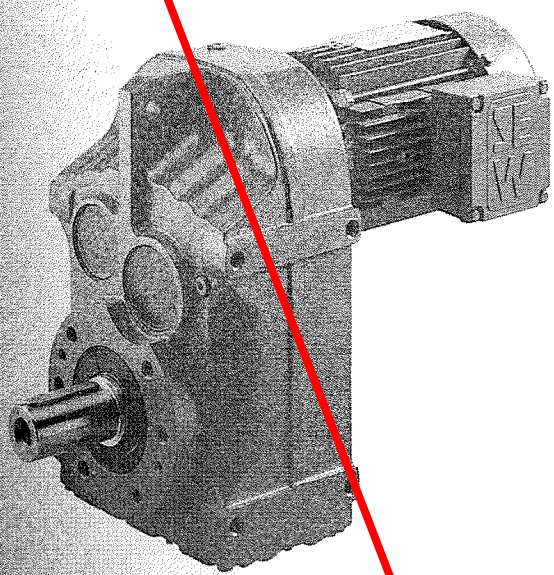

F..DT../DV..

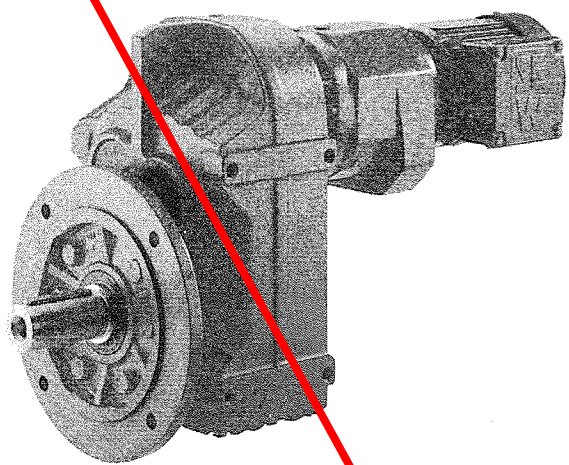

FF..R..DT../DV..

	FA87					AM143			AM145			AM182			AM184		
Ratio i	Output Speed n_a rpm	Input Power P_{emax} HP	Output Torque T_{amax} lb-in	Stages Pri.	Stages Sec.	Input Power P_e HP	Output Torque T_a lb-in	Output OHL F_{Ra} lb	Input Power P_e HP	Output Torque T_a lb-in	Output OHL F_{Ra} lb	Input Power P_e HP	Output Torque T_a lb-in	Output OHL F_{Ra} lb	Input Power P_e HP	Output Torque T_a lb-in	Output OHL F_{Ra} lb
270.68	6.50	2.93	26600	3	-	1	8580	6530	2	18100	5920	-	-	-	-	-	-
255.37	6.90	3.06	26600	3	-	1	8050	6570	2	17000	6010	-	-	-	-	-	-
228.93	7.60	3.46	26600	3	-	1	7260	6590	2	15200	6120	3	22700	5540	-	-	-
197.20	8.90	3.99	26600	3	-	1	6240	6660	2	13100	6280	3	19600	5810	3.99	26600	4460
179.97	9.70	4.26	26600	3	-	1	5710	6680	2	11900	6350	3	17900	5940	4.26	26600	4460
159.61	11	4.79	26600	3	-	1	5040	6710	2	10600	6410	3	15800	6080	4.79	26600	4460
134.16	13	5.72	26600	3	-	1	4250	6730	2	8940	6530	3	13300	6260	5	22700	5540
123.29	14	6.25	26600	3	-	1	3890	6750	2	8230	6550	3	12200	6320	5	20900	5690
109.49	16	7.03	26600	3	-	1	3450	6750	2	7260	6590	3	10800	6410	5	18500	5810
97.89	18	7.85	26600	3	-	-	-	-	2	6460	6640	3	9650	6390	5	16500	5720
88.01	20	8.78	26600	3	-	-	-	-	2	5750	6500	3	8580	6230	5	14800	5630
76.39	23	10.11	26600	3	-	-	-	-	2	4910	6280	3	7430	6030	5	12700	5490
68.40	26	11.31	26600	3	-	-	-	-	-	-	-	3	6590	5850	5	11300	5400
56.75	31	13.57	26600	3	-	-	-	-	-	-	-	3	5350	5580	5	9380	5200
50.36	35	14.90	26000	3	-	-	-	-	2	3320	5560	3	4960	5380	5	8500	5040
45.28	39	15.83	25000	3	-	-	-	-	2	2960	5380	3	4430	5240	5	7610	4930
39.30	45	17.69	24100	3	-	-	-	-	2	2520	5150	3	3810	5040	5	6550	4770
35.19	50	18.89	23100	3	-	-	-	-	-	-	-	3	3360	4880	5	5840	4640
33.92	52	19.28	23100	2	-	1	1090	5040	2	2300	4930	3	3410	4820	5	5800	4590
29.20	60	21.94	22200	3	-	-	-	-	-	-	-	3	2790	4640	5	4820	4430
28.78	61	21.41	21700	2	-	1	920	4790	2	1950	4680	3	2880	4590	5	4910	4390
26.50	66	27.93	26600	2	-	1	850	4660	2	1770	4570	3	2660	4480	5	4510	4300
23.68	74	31.92	26600	2	-	1	750	4500	2	1590	4410	3	2390	4340	5	4030	4160
21.32	82	35.91	26600	2	-	-	-	-	2	1420	4280	3	2120	4210	5	3630	4050
19.31	91	38.57	26600	2	-	-	-	-	2	1270	4140	3	1900	4070	5	3270	3940
17.12	102	43.89	26600	2	-	-	-	-	2	1120	3980	3	1680	3940	5	2880	3830
15.48	113	49.21	26600	2	-	-	-	-	-	-	-	3	1500	3830	5	2610	3710
13.12	133	57.19	26600	2	-	-	-	-	-	-	-	3	1260	3620	5	2170	3530
8.29	211	46.55	13500	2	-	-	-	-	2	550	3150	3	820	3130	5	1410	3060
7.35	238	51.87	13500	2	-	-	-	-	2	480	3040	3	725	3020	5	1240	2950
6.65	263	57.19	13500	2	-	-	-	-	-	-	-	3	645	2930	5	1120	2880
5.63	311	67.83	13500	2	-	-	-	-	-	-	-	3	540	2770	5	940	2720

Please consult your SEW-Eurodrive Assembly Center for additional speed (RPM) selections and dimension pages not listed.

FF87..

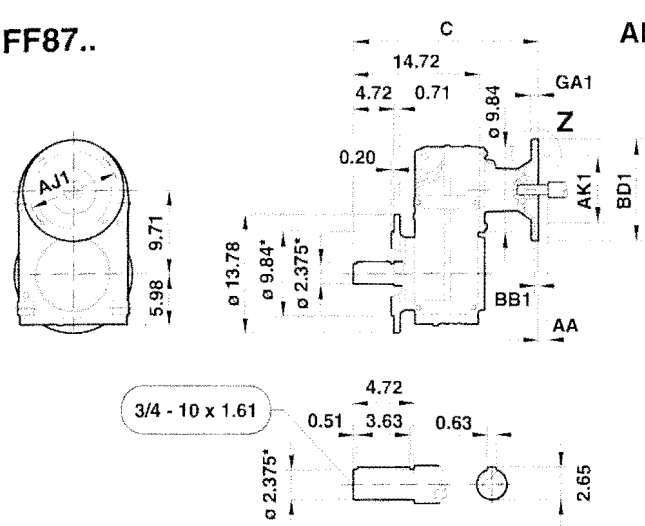

AM56-145

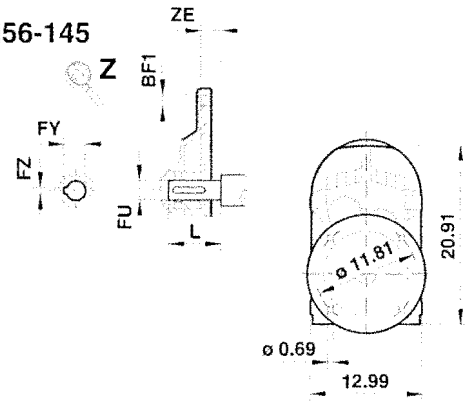

FAF87..

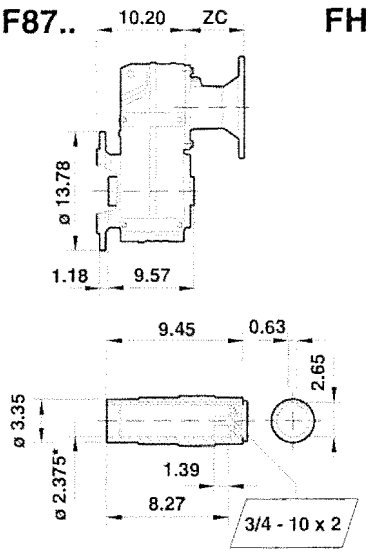

FHF87..

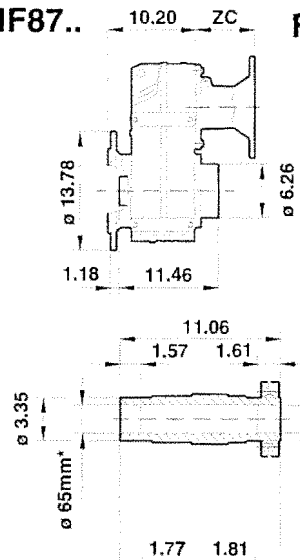

FVF87..

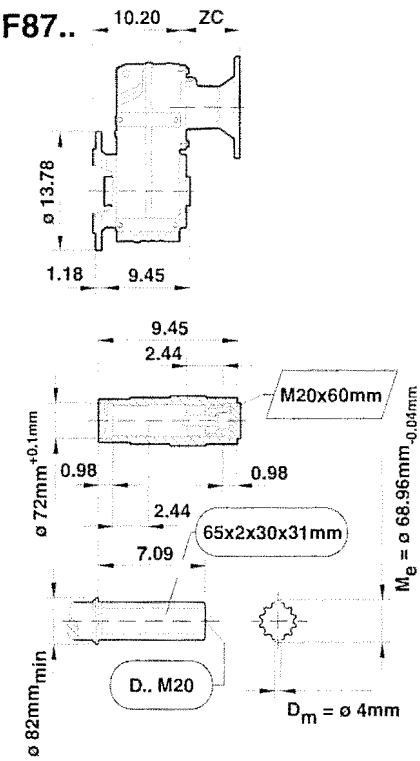

		AK1	GA1	AJ1	BB1	BD1	C	AA	BF1	ZC	ZE	FU	L	FY	FZ
~~FF87~~ FAF87	AM143	4.50	0.47	5.875	0.18	6.69	18.60	0.12	0.41	3.88	0.57	0.875	2.24	0.98	0.188
~~FHF87~~ FVF87	AM145	4.50	0.47	5.875	0.18	6.69	18.60	0.12	0.41	3.88	0.57	0.875	2.24	0.98	0.188

*Refer to page 101 for tolerance information
Dimensions subject to change without notice

Refer to page 94 for Alternate Shafts
See page 99 for Compound Reducer Information

FF/FAF/FHF/FAZ/FHZ27-157, FVF/FVZ27-107

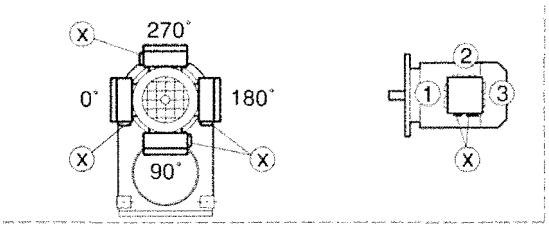

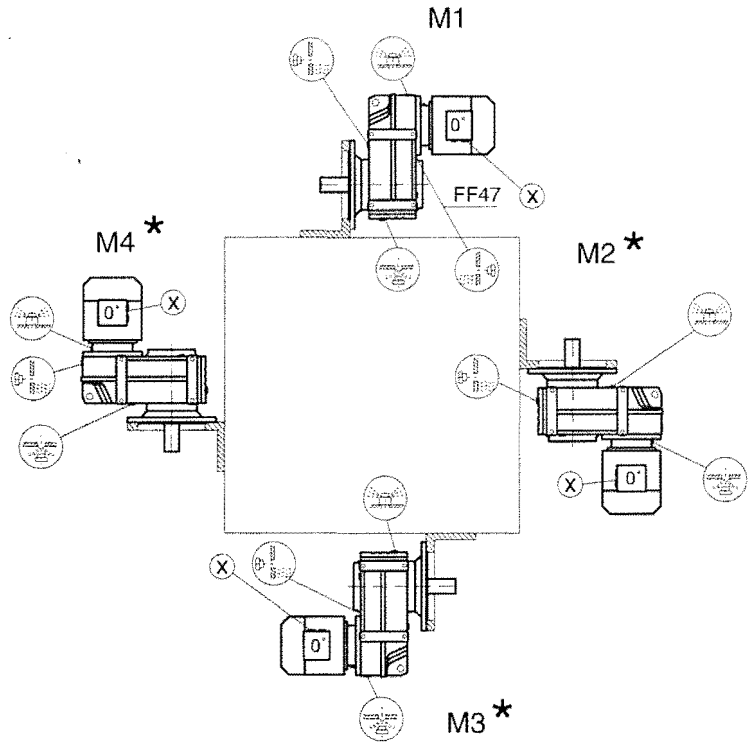

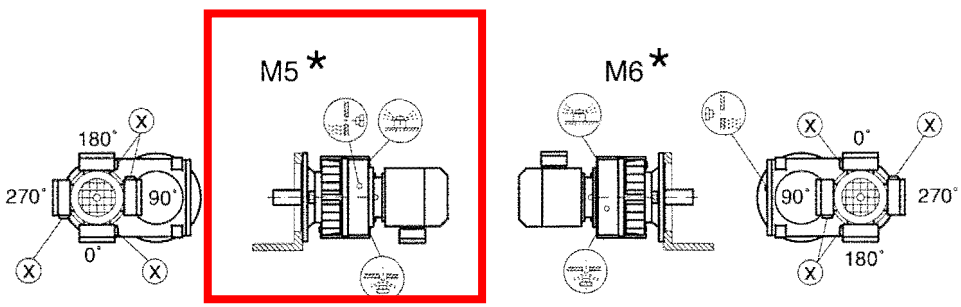

F..27 M1, M3, M5, M6

F..27 M1 M6

F..27 M1, M3, M5, M6

* → page 11

The approximate lubricant in US **gallons and liters** per mounting position is as follows:

Gear Unit	Mounting Position											
	M1		M2		M3		M4		M5		M6	
	Gallons	Liters	Gallons	Liters	Gallons	Liters	Gallons	Liters	Gallons	Liters	Gallons	Liters
F37	0.26	1	0.32	1.2	0.18	0.7	0.32	1.2	0.26	1	0.29	1.1
F47	0.40	1.5	0.48	1.8	0.29	1.1	0.50	1.9	0.40	1.5	0.45	1.7
F57	0.69	2.6	0.98	3.7	0.55	2.1	0.92	3.5	0.74	2.8	0.77	2.9
F67	0.71	2.7	1.00	3.8	0.50	1.9	1.00	3.8	0.77	2.9	0.85	3.2
F77	1.32	5	1.93	7.3	1.14	4.3	2.11	8	1.59	6	1.66	6.3
F87	2.64	10	3.43	13	2.03	7.7	3.65	13.8	2.85	10.8	2.91	11
F97	4.89	18.5	5.94	22.5	3.33	12.6	6.66	25.2	4.89	18.5	5.28	20
F107	6.47	24.5	8.45	32	5.15	19.5	9.91	37.5	7.13	27	7.13	27
F127	10.70	40.5	14.53	55	8.98	34	16.12	61	12.29	46.5	12.42	47
F157	18.23	69	27.48	104	16.64	63	27.74	105	22.72	86	20.61	78
FF37	0.26	1	0.32	1.2	0.18	0.7	0.34	1.3	0.26	1	0.29	1.1
FF47	0.42	1.6	0.50	1.9	0.29	1.1	0.50	1.9	0.40	1.5	0.45	1.7
FF57	0.74	2.8	1.00	3.8	0.55	2.1	0.98	3.7	0.77	2.9	0.79	3
FF67	0.71	2.7	1.00	3.8	0.50	1.9	1.00	3.8	0.77	2.9	0.85	3.2
FF77	1.35	5.1	1.93	7.3	1.14	4.3	2.14	8.1	1.59	6	1.66	6.3
FF87	2.72	10.3	3.49	13.2	2.06	7.8	3.73	14.1	2.91	11	2.96	11.2
FF97	5.02	19	5.94	22.5	3.33	12.6	6.74	25.5	4.99	18.9	5.42	20.5
FF107	6.74	25.5	8.45	32	5.15	19.5	10.17	38.5	7.27	27.5	7.40	28
FF127	10.96	41.5	14.80	56	8.98	34	16.64	63	12.29	46.5	12.95	49
FF157	19.02	72	27.74	105	16.91	64	28.01	106	22.99	87	20.87	79
FA/FH/FV37 FAF/FHF/FVF37 FAZ/FHZ/FVZ37	0.26	1	0.32	1.2	0.18	0.7	0.32	1.2	0.26	1	0.29	1.1
FA/FH/FV47 FAF/FHF/FVF47 FAZ/FHZ/FVZ47	0.40	1.5	0.48	1.8	0.29	1.1	0.50	1.9	0.40	1.5	0.45	1.7
FA/FH/FV57 FAF/FHF/FVF57 FAZ/FHZ/FVZ57	0.71	2.7	1.00	3.8	0.55	2.1	0.95	3.6	0.77	2.9	0.79	3
FA/FH/FV67 FAF/FHF/FVF67 FAZ/FHZ/FVZ67	0.71	2.7	1.00	3.8	0.50	1.9	1.00	3.8	0.77	2.9	0.85	3.2
FA/FH/FV77 FAF/FHF/FVF77 FAZ/FHZ/FVZ77	1.32	5	1.93	7.3	1.14	4.3	2.11	8	1.59	6	1.66	6.3
FA/FH/FV87 FAF/FHF/FVF87 FAZ/FHZ/FVZ87	2.64	10	3.43	13	2.03	7.7	3.65	13.8	2.85	10.8	2.91	11
FA/FH/FV97 FAF/FHF/FVF97 FAZ/FHZ/FVZ97	4.89	18.5	5.94	22.5	3.33	12.6	6.61	25	4.89	18.5	5.28	20
FA/FH/FV107 FAF/FHF/FVF107 FAZ/FHZ/FVZ107	6.47	24.5	8.45	32	5.15	19.5	9.91	37.5	7.13	27	7.13	27
FA/FH/FV127 FAF/FHF/FVF127 FAZ/FHZ/FVZ127	10.30	39	14.53	55	8.98	34	16.12	61	11.89	45	12.29	46.5
FA/FH/FV157 FAF/FHF/FVF157 FAZ/FHZ/FVZ157	17.97	68	27.21	103	16.38	62	27.48	104	22.46	85	20.34	77

For compound drives the R reducer requires its own oil filling as shown in the chart:

Gear Unit	Mounting Position					
	M1/M3/M5/M6		M2		M4	
	Gallons	Liters	Gallons	Liters	Gallons	Liters
R17	0.07	0.25	0.16	0.6	0.16	0.6
R37	0.11	0.4	0.24	0.9	0.29	1.1
R57	0.21	0.8	0.48	1.8	0.53	2
R77	0.32	1.2	1.00	3.8	1.08	4.1
R87	0.63	2.4	1.8	6.8	2.03	7.7
R97	1.35	5.1	3.14	11.9	3.70	14

Each gear unit is supplied from the factory with the correct grade and quantity of lubricant for the specified mounting position. The following lubricants are supplied from our North American Facilities. Under special circumstances such as high or low ambient temperatures optional oils should be used.

Standard Oil

USA			
Gear Units	Type	Manufacturer	Ambient Temperature °C
F..37 – 157	Mobilgear 630 [M]	Mobil Oil Corp.	0 to +40
CANADA			
F..37 – 157	Omala 220 [M]	Shell Oil Co.	0 to +40

[M]Mineral Oil

Optional Oil

USA			
Gear Units	Type	Manufacturer	Ambient Temperature °C
F..37 – 157	Mobilgear 629 [M]	Mobil Oil Corp	-15 to +25
F..37 – 157	Mobil SHC630 [S]		-40 to +40
F..37 – 157	Mobil SHC629 [S]		-30 to +50
CANADA			
F..37 – 157	Omala RL220 [S]	Shell Oil Co.	-30 to +80

[M]Mineral Oil
[S] Synthetic Oil

For ball and roller bearings of gear units, the following greases are recommended:

Mineral Grease

Type	Manufacturer	Ambient Temperature °C
Mobilux EP2	Mobil Oil Corp.	-20 to +40
Alvania Grease R3	Shell Oil Co.	-30 to +60

Synthetic Grease

Type	Manufacturer	Ambient Temperature °C
Mobiltemp SHC 32	Mobil Oil Corp.	-45 to +60

General Information

Introduction

The SEW-Eurodrive ^{the}SNUGGLER® Helical Gear Units are designed for continuous duty under difficult operating conditions. Only materials of the highest quality are used in the manufacture of the units. These units have the following standard construction features:

- Helical gearing in compliance with ANSI/AGMA Standard 2001-B88.
- Gears are carburized to a hardness of 58 - 62 R_C for durability.
- Gearcase and flanges of high strength gray cast iron SAE Class 30.
- Double-lip oil seals on output shaft with additional inner seal made of Viton®.
- Captured keys on input shafts.
- Foot mounted, flange mounted, foot/flange mounted, shaft mounted, flange mounted with hollowshaft, or shaft/flange/foot mounted.
- Integral torque arm.

Efficiency

The efficiency of the gear units is primarily determined by the gearing and bearing friction, and ranges from approximately 95% for 3 stages of gear reduction to 97% for 2 stages of gear reduction.

Output Power, Torque, and Speed

The details on power, torque, and speed given in the selection tables always refer to the mounting position M1 or similar mounting position for standard features, standard ambient conditions, and standard lubricants. The output speeds have been rounded up or down. The actual output speed may vary slightly due to the motor frame size, the loading, or the supply voltage.

Design Variations

Additional features available for ^{the}SNUGGLER® Gear Units are:

- Adapters for IEC or NEMA C-Face motors.
- Motor mounting platforms and scoops.
- Adapters for torque limiting couplings.
- Corrosion protection.
- Shrink disc shaft mounting

Please contact your SEW-Eurodrive representative for additional information.

Abbreviations

The following abbreviations are used in the selection tables:

f_B	Service Factor
F_{Ra}	Permissible output overhung load (lb) at the midpoint of the output shaft extension
F_{Rc}	Permissible input overhung load (lb) at the midpoint of the input shaft extension
i	Gear unit ratio
n_a	Output speed in rpm
n_e	Input speed in rpm
P_a	Rated output power (HP)
P_e	Calculated power input into the gear unit (HP)
	P_e is calculated from $T_{a\,max}$ by taking into account the gear units' efficiency under standard operating conditions. For calculated P_e less than .2HP, a dash (—) is shown in the respective selection tables since the actual values are subject to large variations.
P_n	Motor rated power (HP)
T_a	Output torque (lb-in.) with reference to the driving motor
$T_{a\,max}$	Maximum permissible output torque (lb-in.) at $f_B = 1.0$

Dimension Page Notes

The dimension sheets are valid for standard units with various basic features. In particular, motor accessories such as canopies, ventilators, etc. will alter the basic dimensions. Please refer to the respective accessory dimension pages for additional dimensions.

Motors from frame size DV112 are supplied with lifting eye bolts which can be removed. Smaller motors do not have lifting eye bolts.

Certified dimension sheets are available from your SEW-Eurodrive Assembly Center.

Viton® is a registered trademark of DuPont Dow Elastomers

Unit Selection

In order to select the most suitable gear unit it is essential that a thorough knowledge of the characteristics of the driven machine are known. The gear units are normally designed for constant torque load and only a few starts/stops. If these conditions do not exist, it is necessary to determine a service factor, f_B, from the start/stop frequency, Load Class, and the daily operating time as shown in the diagram below.

For gearmotors, the appropriate service factor taken from the diagram is then compared with the service factor given with each speed/power combination listed in the gearmotor selection tables. To ensure a long, trouble free service life it is essential that the unit selected has a service factor equal to, or greater than, that determined from the diagram.

Load Classification

I = Uniform load. Permissible inertia acceleration factor ≤0.2

II = Moderate shock load. Permissible inertia acceleration factor ≤3.0

III = Heavy shock load. Permissible inertia acceleration factor ≤10

For inertia acceleration factor > 10, please contact your nearest SEW-Eurodrive representative.

Inertia acceleration factor = $\frac{J_L}{J_m}$

Where: J_L = Reflected Load Inertia
J_m = Motor Inertia

All external load inertias, J, must be reflected back to the input side of the gear unit.

Example: $J_L = J \times \frac{1}{(\text{Gear Ratio})^2}$

Included in the number of starts and stops per hour must be all regenerative brake actions and the speed changes from high to low speed as experienced with multi-speed motors.

Example: Load Class I with 200 starts and stops per hour and operating time of 24 hours per day gives f_B = 1.36.

AGMA

For Service Factors using AGMA criteria, please refer to the guidelines on page 35 .

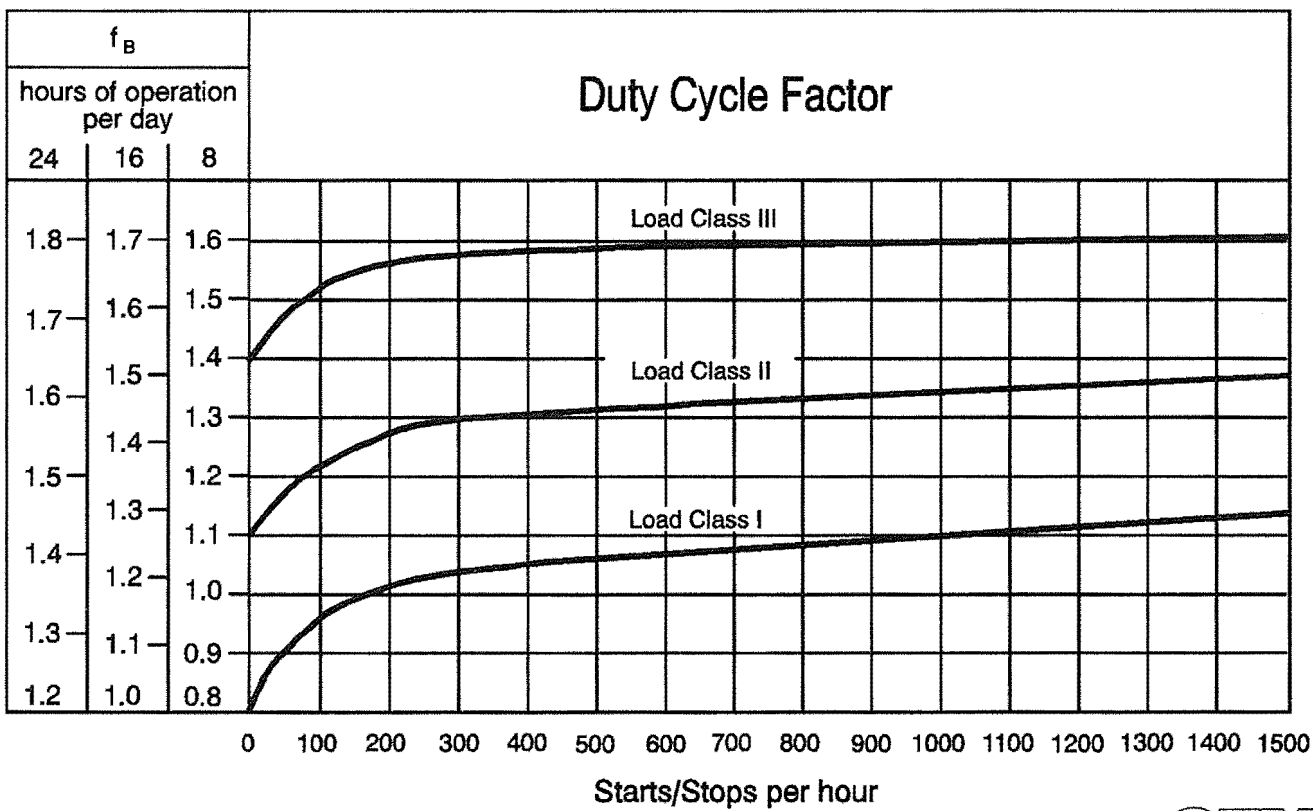

Overhung loads, OHL, are a combination of live loads acting at right angles to the drive shaft caused by gears, sprockets, pulleys, couplings, etc., as well as dead loads applied directly to the shaft.

These overhung loads subject shaft bearings and shafts to stresses which, if exceeded, may cause premature failure of bearings and/or shaft breakage from bending fatigue.

Determination of Overhung Load - OHL

When determining the resulting overhung load, the type of transmission element mounted on the shaft end must be considered and a transmission element factor, f_z, must be included. The overhung load exerted on the output or input shafts can be then calculated from the following formula. The resultant overhung load F must not exceed the permissible overhung load F_{Ra} for the selected gear unit.

$$F = \frac{2T}{d_o} \cdot f_z$$

F = equivalent OHL in lbs.
T = load torque on the drive in lb-in.
d_o = pitch diameter of the gear, sprocket, or sheave in inches
f_z = transmission element factor

The transmission element factor, f_z, takes into account an additional radial force that is imposed on the shaft due to the type of transmission element: gear, chain sprocket, or sheave. There are gear teeth separating forces, pre-tensioning of belts, etc. that must be taken into account to determine the total equivalent radial loads. From applicational experience the following values of f_z should be used:

Transmission Element	Comments	f_z Factor
Spur or helical gears	17 teeth	1.0
	< 17 teeth	1.15
Chain sprockets	20 teeth	1.0
	< 20 teeth	1.25
	< 13 teeth	1.4
V-belt pulleys		1.75
Flat belt pulleys		2.5
Timing belt pulleys		1.3

Permissible Output Shaft Loads

The output shaft of the SEW-Eurodrive gear units are capable of accepting the axial and radial loads normally encountered by the mounting of gears, chain sprockets, belt pulleys, and shaft couplings. The permissible OHL under the most unfavorable conditions which can be applied at the midpoint of the shaft extensions for the gear unit type F is shown in the respective speed/power selection tables as F_{Ra} in lbs. When the force is not applied at the midpoint of the shaft extension the F_{Ra} value must be adjusted according to the OHL conversion formulas.

It is possible in some instances for the OHL capacity to be substantially increased if the exact direction of the radial force is known. In such instances it is essential that full details be given to our engineering department to check the suitability of the unit selected.

For permissible axial loads for gear unit type F, please submit full details to our engineering department.

Output OHL Conversion

If the resultant OHL acts at a point other than at the midpoint of the output shaft extension, the permissible OHL, F_X, must be determined at the application point of the load according to the following formula:

F_{Ra}-(lb.) Permissible overhung load at the midpoint of the output shaft extension—see selection tables.
X-(in.) Distance from the shoulder on the output shaft to the application point of load.
F_X-(lb.) Permissible overhung load at the point X
a-(lb-in.) Gear unit constant - see chart for values.
b,c,d-(in.) Gear unit constant - see chart for values.

The permissible OHL is the smaller of the two values obtained from the following formulae, F_{XL} and F_{XW}, and is denoted as F_X. The permissible OHL, F_X, **must be** greater than the calculated equivalent overhung load, F.

$$\text{Permissible OHL, } F_{XL} = F_{Ra} \cdot \frac{c}{d + x} \text{ (lb)}$$

$$\text{Permissible OHL based on shaft stress, } F_{XW} = \frac{a \times 10^3}{b + x} \text{ (lb)}$$

Note: F_{XW} applies only when reducer torque, T_a, is maximum.

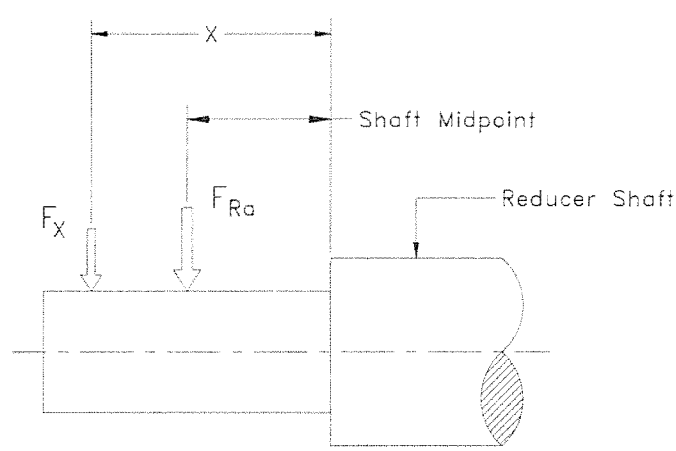

Frame Size	a lb-in.	b in.	c in.	d in.
F 37	0.95	0	4.86	3.88
F 47	1.58	0	6.04	4.86
F 57	4.86	1.26	6.72	5.34
F 67	3.65	0	7.14	5.56
F 77	6.96	0	8.50	6.53
F 87	10.53	0	10.35	7.99
F 97	18.50	0	13.78	11.02
F 107	37.44	0	14.70	11.36
F 127	83.63	0	17.42	13.29
F 157	92.93	0	20.16	16.02

MAX-E1™ NEMA PREMIUM EFFICIENCY

CC002A

TYPE AEHE, AEHH8N

Effective 08-01-06
Supercedes 08-22-05

APPLICATIONS:

- Fans & Blowers
- Pumps
- Crushers
- Compressor
- Mixers
- Conveyors
- Any Severe Duty / Petro-Chem / Pulp & Paper Application

FEATURES:

- 3/4 - 800 HP
- 3600, 1800, 1200, 900 RPM
- Totally Enclosed Fan Cooled (IP54 Rating)
- NEMA Premium Efficient Ratings From 1 - 500 HP, Denoted Catalog Number Prefix of "EP" - Note (1)
- Department of Energy Efficiency Certification # CC002A
- 36 Months Warranty from Date of Manufacture
- 3 Phase, 60 Hz , 230/460V (Usable on 208V) – 150 HP and Larger are 460V Only
- 575V Ratings Available, Denoted by a Catalog Number Suffix of "5" - Note (2)
- 1.15 Service Factor – Continuous
- NEMA Design B Torques as a Minimum
- Class B Temperature Rise, Class F Insulation with Phenolic Alkyd Resin Varnish – 2 Dips and Bakes
- Oversized Main Conduit Box Rotatable in 90 Degree Increments – Fully Gasketed with NPT Threaded Entrance – F1 Mounted. F2 Available – See EXTRAS / OPTIONS Below
- Designed for 40˚C Ambient Temperature and Designed for 3300 ft. Elevation - Note (3)
- CSA Certified for Class I, Division II, Groups B, C, D, Temp Code T3C, Non Sparking, Non Static Fan - Note (4)
- Bi-Directional Rotation Except 2 Pole Motors 5000 Frame and Larger which are Unidirectional CCW Facing the Drive-End. See EXTRAS / OPTIONS Below if CW Rotation is Required.
- Cast Iron Frame, End Bells, Fan Cover, and Main Conduit Box
- Dual Drilled Feet – Longer Frames. (i.e. 145T Drilled Also for 143T) Through 449T Frames Only
- 1045 Carbon Steel Shaft
- Aluminum Die Cast Squirrel Cage Rotor Construction for Frames 5011 and Smaller. Copper / Copper Alloy Rotor for Frames 5800-6800.
- Paint System: Phenolic Rust Proof Base Plus Polyurethane Top Coat
- Paint Color: Light Grey – Munsell N5.0
- Vacuum De-Gassed Regreasable Ball Bearings (or Roller) Using Polyrex EM Grease
- Automatic Grease Discharge Fittings
- Labyrinth Type Metal Flinger on Both Ends for Frames 280TS to 6800
- Rubber Flinger on Drive-End for Frames 140T to 280T
- Cast Iron Inner and Outer Bearing Caps on Both Ends for Frames 280TS to 6800
- Grounding Terminal Inside Main Box
- Stainless Steel Nameplate
- UL Recognized and CSA Approved for Inverter Duty per NEMA MG 1, Part 31 – 300 HP and Below. 350 HP and Above are Suitable for Inverter Duty per NEMA MG 1, Part 31, 4.4.2 - Note (5)
- HPE Stator Wire Capable of Withstanding Voltage Spikes of Up to 2200 Volts
- Speed Ranges: 20:1 VT, 10:1 CT
- 9 Leads -5 HP and Below, 12 Leads - 7.5 HP to 125 HP, 6 Leads - 150 HP and Larger

EXTRAS / OPTIONS:

Please refer to pages 62 - 66 of the TWMC Stock Motors Price Book.

Notes:

(1) NEMA Premium Efficiency levels only applies to 1-500 HP, 3600, 1800, 1200 RPM.
(2) TWMC carries minimal 575V stock. Please check availability to ensure required motors are in stock. Ratings may be available from our Canadian warehouses at a higher price, or from our factory with longer lead time.
(3) Please consult factory for suitability in higher ambients and higher elevations.
(4) Additional charge for Division II nameplate.
(5) Motor service factor is 1.0 when operated on a VFD.

DATE JAN. 4, 2007	OUTLINE DIMENSIONS	MOTOR TYPE: AEUH8NDC
CAT. #: EPV0024C	3-PHASE INDUCTION MOTOR	FRAME NO. 145TC

Pole	HP	kW	Hz	VOLT	Syn. Speed r/min(rpm)
4	2	1.5	60	230/460	1800

Ins	Rating	Dimension in	Approx Weight	Bearings
F	CONT.	inches	66 LBS	DE: 6205ZZ NDE: 6205ZZ

Totally Enclosed Fan-Cooled Vertical Type. Squirrel-Cage Rotor.

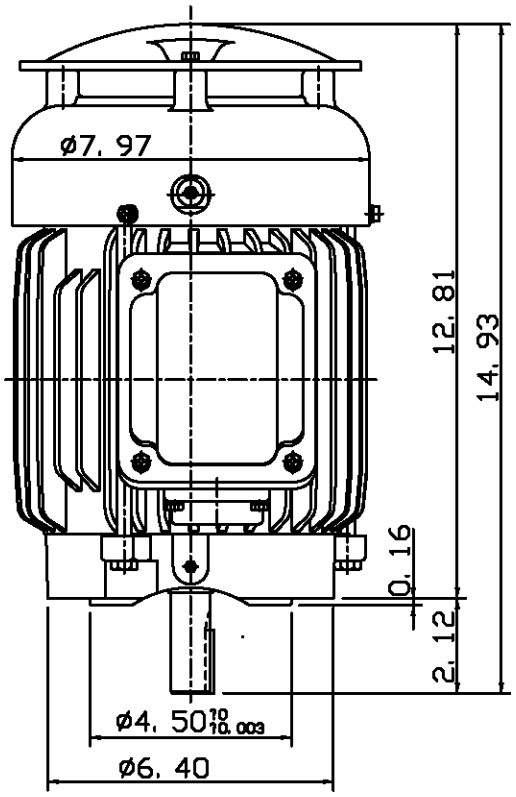

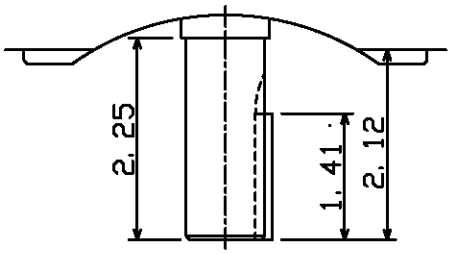

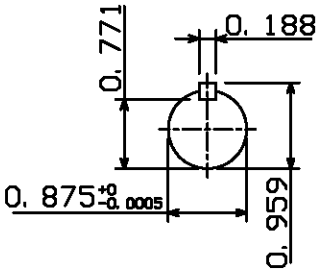

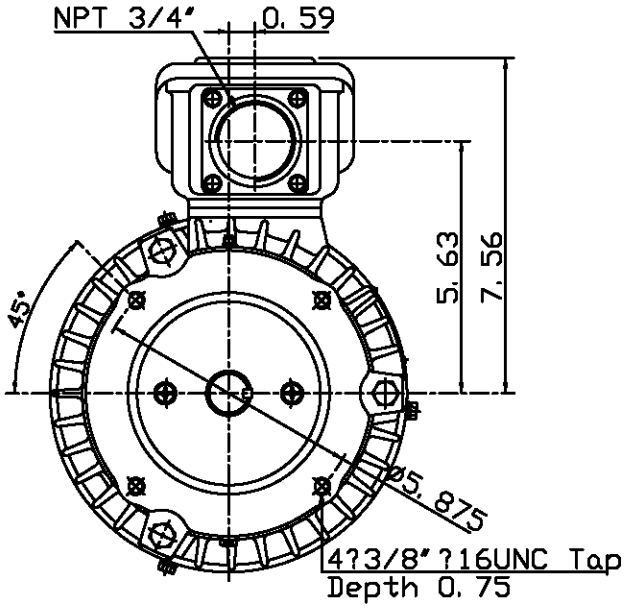

0			

DWN.	J. H. LIANG	12-23-06	TECO Westinghouse	DWG NO.
CHKD.	H. C. YAN	12-28-06		31049M990060
APPD.	M. C. TSAI	12-28-06		

TECO Westinghouse

ISSUED	PERFORMANCE DATA	ENCLOSURE
9/13/2006		TEFC
TYPE	3-PHASE INDUCTION MOTOR	CATALOG#
AEUH8NDC		EPV0024C

NAMEPLATE INFORMATION

OUTPUT HP	OUTPUT KW	POLE	FRAME SIZE	VOLTAGE	HZ	RATED AMBIENT	INS. CLASS	NEMA DESIGN	TIME RATING	SERVICE FACTOR
2	1.49	4	145TC	230/460	60	40°C	F	C	CONT.	1.15

VARIABLE FREQUENCY DRIVE SERVICE

VARIABLE TORQUE			
HZ	HP	RPM	TORQUE (lb-ft)
3~60	0.0003~2	90~1800	0.0175~6.035

OHMS/PHASE EQUIVALENT WYE CIRCUIT (AT RATED OPERATING TEMPERATURE 25°C)				
R1	R2	X1	X2	X_m
3.9555	4.3639	10.417	6.5877	170.99

CONSTANT TORQUE				CONSTANT HORSEPOWER			
HZ	HP	RPM	TORQUE (lb-ft)	HZ	HP	RPM	TORQUE (lb-ft)
6~60	.2~2	180~1800	6.035	60~120	2	1800~3600	6.035~3.0175

TYPICAL PERFORMANCE

FULL LOAD RPM	EFFICIENCY				POWER FACTOR			SOUND PRESSURE LEVEL @ 3 FT Db(A)
	FULL LOAD		3/4 LOAD %	1/2 LOAD %	FULL LOAD %	3/4 LOAD %	1/2 LOAD %	
	MIN.%	NOM.%						
1740	84	86.5	84	84	78	70	57	51

CURRENTS									NEMA KVA CODE LETTER	SAFE STALL TIME IN SECONDS	
NO LOAD			FULL LOAD			LOCKED ROTOR					
AT 208 VOLT	AT 230 VOLT	AT 460 VOLT	AT 208 VOLT	AT 230 VOLT	AT 460 VOLT	AT 208 VOLT	AT 230 VOLT	AT 460 VOLT		COLD	HOT
3.22	2.92	1.46	6.14	5.56	2.78	55.20	50.0	25	L	43	30

TORQUE				INERTIA			ACCEL TIME (DOL)		ALLOWABLE STARTS PER HOUR	
FULL LOAD (lb-ft)	LOCKED ROTOR %FLT	PULL UP %FLT	BREAK DOWN %FLT	ROTOR WR^2 ($lb\text{-}ft^2$)	NEMA LOAD WK^2 ($lb\text{-}ft^2$)	MAX ALLOWABLE WK^2 ($lb\text{-}ft^2$)	NEMA LOAD WK^2 Sec	MAX ALLOWABLE WR^2 Sec	COLD	HOT
6.04	270	220	330	0.108	11	51	3.83	11.53	2	1

APPROVED:	M. PRATER	DRAWING NO.	31057EPV0024C	REVISION:	0

DATE: September 13, 2006	CONNECTION DIAGRAM	CATALOG NO.: EPV0024C

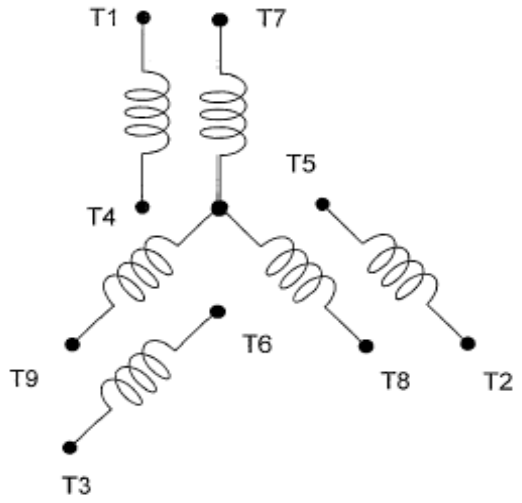

SCHEMATIC - 2Y/Y CONNECTION

ACROSS THE LINE CONNECTION

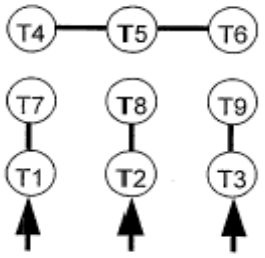

LINE
230 VOLT CONNECTION

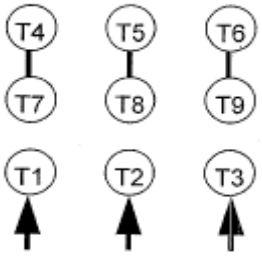

LINE
460 VOLT CONNECTION

TECO Westinghouse	DWG NO. DAC-1566-2

OPERATION & MAINTENACE

WENATCHEE WWTP IMPROVEMENTS
PROJECT PO913
WENATCHEE, WA

SECTION 11092 – PERFORATED PLATE SCREENS
SECTION 11095 – SCREENINGS WASHER COMPACTOR

AGITATOR MOTOR DETAILS

Manufacturer:	Xylem/Flygt
Type:	Special Duty: Submersible
Hp:	5 HP (3.7 kW)
Voltage / Phase:	460/3Ph
Frequency:	60 Hz
Environmental Rating:	Class 1, Div. 2, groups E,F,G
Mounting:	Direct sealed mount to washer hopper

INTRODUCTION

The ITT Flygt Submersible Mixer consists of a proven electric submersible motor in combination with either a propeller and shroud assembly or a gearbox driven propeller and shroud assembly in one integral unit.

Mixers are designed to mix liquids containing suspended solids in vessels of varying shapes and sizes.

ITT Flygt's Warm Liquid models will mix liquids having elevated temperatures.

All ITT Flygt's mixers for regular service are certified according to CSA standard c22.2, No. 108. Regular mixers are also certified for Class I, Division 2, Group A, B, C and D hazardous location service.

ITT Flygt's mixers are available with approval for Class I, Division 1, Group C and D as certified by CSA and/or Factory Mutual.

Various materials are available for mixer components (propellers, seals, O-rings etc.). When ordering a mixer for a particular application, special materials can be specified for these components to be incorporated into your mixer to meet your application's requirements.

ITT Flygt offers a full line of accessories as well as controls specifically designed for ITT Flygt Mixers.

ITT Flygt submersible mixers have been in service for over ten years worldwide in a broad range of municipal and industrial applications. Our proven in-field experience is unequaled and is *our customers most important assurance for* ***successful*** *mixing and superior reliability.*

ITT Flygt stands behind its products and is committed to customer satisfaction. Our mixers come with a generous warranty and are backed by a nationwide network of Factory Authorized Service Facilities using only genuine ITT Flygt replacement parts.

Remember, we won't just sell you a mixer. If you ever need assistance with our products, we're just a phone call away.

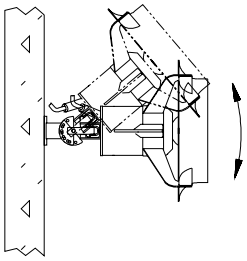

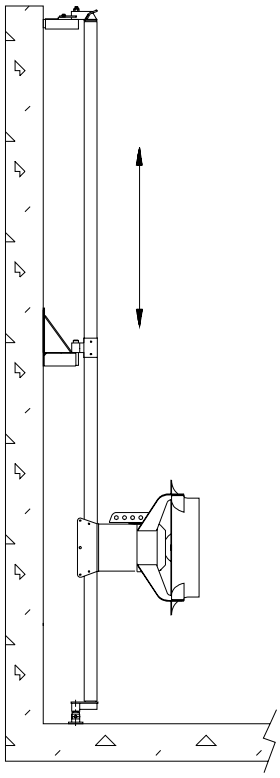

Superior Directivity of the Mixer Jet Flow which results in:

- Optimum mixing results
- Reduced power costs
- Ease of handling
- Reduction of "dead spots" within the tank
- Reduced number of mixers required

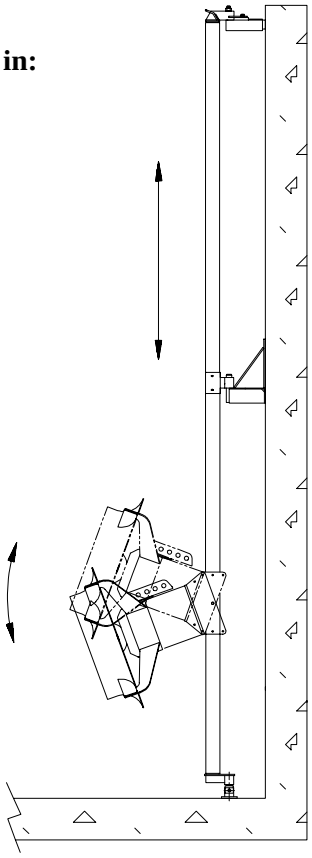

Since the complete integrated unit is designed with optimum hydrodynamic performance in mind, ITT Flygt mixers give a concentrated and powerful flow capable of accelerating the surrounding liquid. This results in effective mixing, even in the farthest corner of the tank.

Normally, the mixer is aimed at creating a horizontal flow, but it can be angled towards the surface or the bottom, if necessary (see illustration below).

Floating crusts can be resuspended, when directing the mixers towards the surface.

When sewage sludge is stored in open tanks, separation occurs. To increase storage capacity, clear liquid at the top can be pumped out, but will eventually result in extreme concentration of the sludge, making effective disposal impossible or very expensive.

But an ITT Flygt mixer, used at different depths, angles and in different directions, can re-homogenize the sludge effectively and inexpensively.

Whether in retrofit or new design applications, installation does not depend on the form of the tank, nor its size. Costly, tailor-made propellers and shafts are eliminated, and the concentrated flow ensures extremely efficient resuspension in all types of tanks. In circular tanks with capacities up to 300,000 gallons, a single mixer will normally be sufficient, In larger tanks, additional mixers may be needed. The same applies for rectangular tanks provided the ratios between length, width and depth are not extreme.

But flow velocity, capacity and power consumption are not the only vital factors when selecting mixers.

Different media, sludge, solids and contaminations call for specific qualities. Warm liquids and locations with hazardous atmospheres add further dimensions to the problem.

ITT Flygt mixers can be angled up or down. As an example, the figures below show the particular method by which this achieved for the 4600 mixers. Rollers 1 and 2 are positioned as indicated and the lifting point is adjusted.

1 & 2 are roller positions for required angles

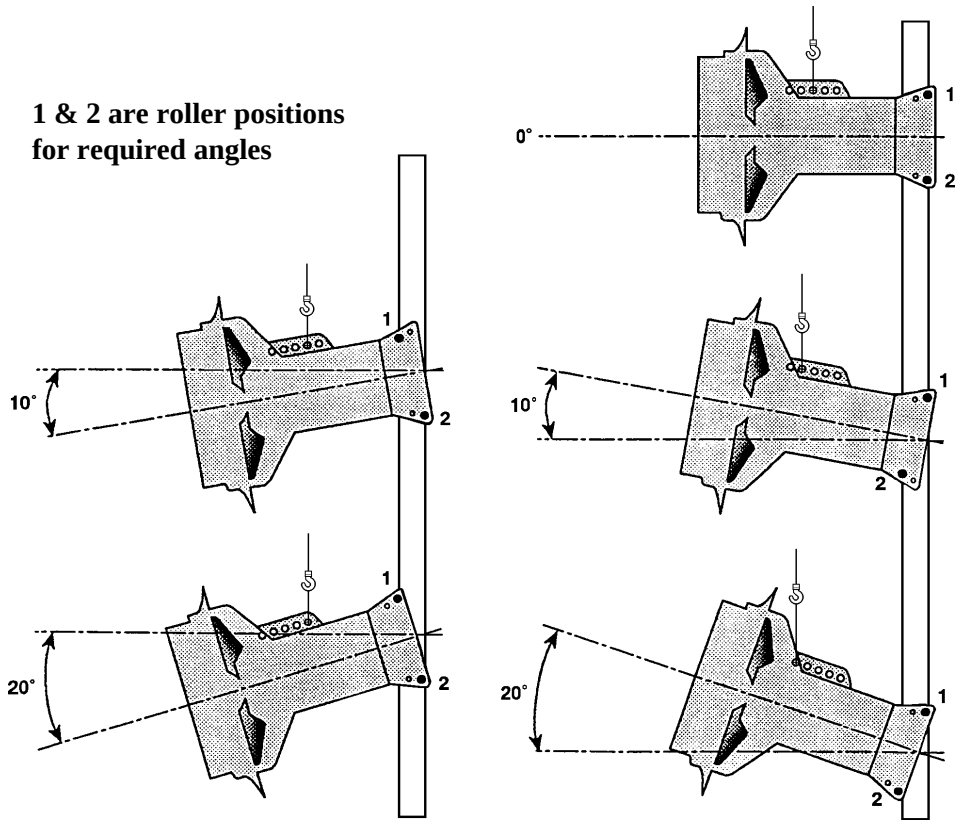

FUNCTION

A mixer's main function is to circulate liquids at a flow rate and velocity which disburses, mixes, blends, dissolves, etc. miscibles or immiscibles to the degree of tank uniformity required by a given process.

ITT Flygt can provide the dynamic response your application requires from off bottom suspension of solids to a fully mixed and dispersed liquids/solids media.

ITT Flygt mixers are ideal for any turbulent flow mixing, flash mixing, flow and basin velocity development, or low head pump application. They provide the most cost effective solution for existing applications and enable mixing for new applications for which mixing was previously cost prohibitive. Designed for continuous duty in applications such as:

Municipal:
Water Treatment Plant, Wastewater Treatment Plant,

Industrial:
Ceramics, Construction, Car Industry, Chemical & Petrochemical, Food & Beverage, Iron & Steel Plants, Mines, Power & Heating, Pulp & Paper, Tanneries, etc.

Agriculture:
Manure Suspension,

Aquaculture:
Fish Farming, Lake Destratification.

In the above specified applications ITT Flygt mixers can be used in the following processes:

- Flocculation & Coagulation
- Sludge Suspension
- Sludge Resuspension
- Lake Destratification
- Digester Mixing
- Aeration Basin Mixing & Oxygen Transfer
- Nitrification & Denitrification
- Slurry Mixing
- Holding Tank Mixing
- Flash Mixing
- pH Control
- Scum Mixing
- Blending Viscous Newtonian & Nonnewtonian Liquids
- Dispersion
- Fermentation
- Oxidation Ditch Pumping
- Lagoon Suspension or Resuspension
- Stormwater Basin Equalization
- Cooling
- Temperature Control
- Current Creation

ITT Flygt's submersible mixing concept provides many unique benefits:

- Low capital cost.
- Easy to install -- no catwalks or other superstructures required.
- Simple and inexpensive to maintain -- can be easily removed to a safe convenient location for service using standard ITT Flygt parts.
- Easy to replace -- new unit quickly installed without draining the tank - no downtime.
- Extensive and expert field service organization nationwide.
- Standard product -- off-the-shelf availability.
- Configuration flexibility -- can fit any tank size and shape.
- Nonvortexing operation -- eliminates the need for special tank baffles.
- Application flexibility -- can be adapted to local operating conditions which do not always match design conditions or may change later.
- Can do most jobs for less horsepower -- saves energy as well as capital costs.
- Short shaft -- means virtually no shaft deflection and prolonged seal and bearing life.
- Silent operation -- noise is muffled by immersion in mixed medium.
- Easily moved -- and set up in other applications.

ITT Flygt's submersible mixers have triggered a strong revolution.

Combining a rugged electric motor with a special propeller in a single, watertight unit, which can be installed at any depth and pointed in any direction, offers superior flow control.

The freedom to move, lower, raise or angle the mixer to direct the flow gives maximum efficiency in any tank or application. Fine-tuning the mixing effects on site takes only minutes.

But the simple, flexible installation principle has more advantages than just optimum performance.

Costly, complicated constructions, like catwalks, are not necessary when using an ITT Flygt mixer. The same goes for external gear boxes and tank fittings.

All the problems connected with extended shafts, and bearings including frequent gear box failures, disappear. And so do all the leakage problems, associated with fixed, side-mounted mixers. The non-vortex operation reduces overall need for special tank baffles.

The submersible operation makes the sound of whining engines and vibrating structures a thing of the past. ITT Flygt mixer installations work without a sound. But most of all, an ITT Flygt mixer installation reduces overall costs. Thanks to high mixing efficiency, a single mixer is adequate even in some large tanks.

The equipment itself is inexpensive, requires a minimum of control equipment and installation time is extremely short.

Even when it comes to maintenance and repair, costly downtime is reduced to a minimum, because an ITT Flygt mixer can be raised out of the liquid in minutes without emptying the tank.

Since our range is very broad, ITT Flygt mixers offer revolutionary performance and economy in most applications, even under difficult conditions.

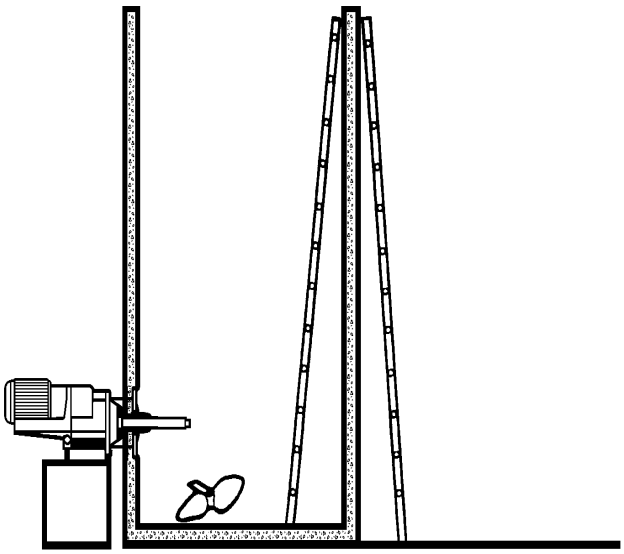

Non Submersible side entry mixers

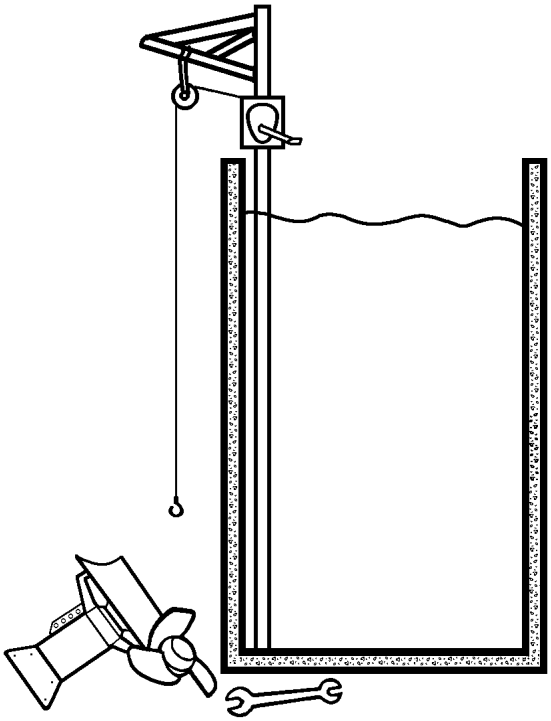

ITT Flygt Submersible Mixers

ITT Flygt supplies a full product line of Submersible Mixers which eliminate treatment plant downtime by enabling the operator to retrieve and install the entire mixer for inspection and maintenance purposes without dewatering the tank or basin.

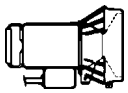

4351

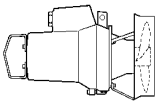

4352

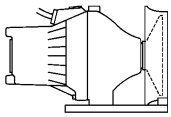

4400

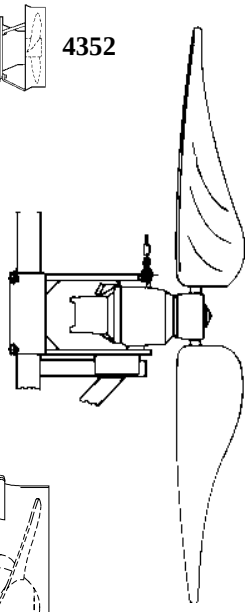

4410 & 4430

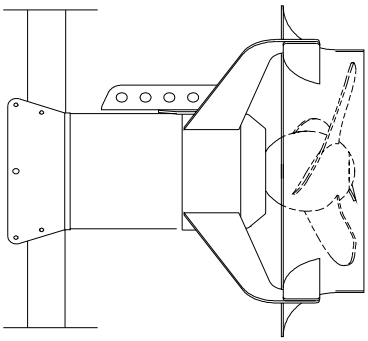

4600 Series

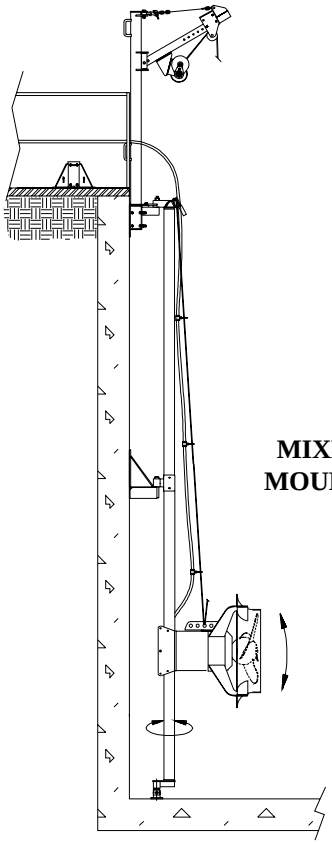

MIXER MOUNTS

The Series 4000 Submersible Mixer Line is comprised of various mixer sizes with their corresponding Mixer Mount Assemblies and Controls. There is also optional equipment available which can be ordered to provide additional installation flexibility.

Mixers

The following mixers; 4630, 4640, 4650, 4660, 4670, 4680, 4351 (SS), 4352 and 4400 are direct drive mixers. The 4410 and 4430 are unique large propeller, slow speed, helical gear units for low head, high capacity laminar flows.

The 4630, 4640, 4650, 4660, 4670, 4680 and 4400 are availble in an Explosion proof model for hazardous location installations. These models as well as the 4351 are available in stainless steel materials of construction. Check availability of all variants.

Mixer Mount Assembly

This equipment is required for mounting the mixer and easy retrieval when service is needed. A Safe-Slide™ Mixer Mount Assembly with parts made of non-sparking materials is available for hazardous location installations.

Controls

ITT Flygt provides starters in weatherproof enclosures according to EEMAC. Controls available are as manual on-off control or to automatically operate the mixer only while it is submerged. The mixers can also be operated by variable speed starters.

CONTROLS

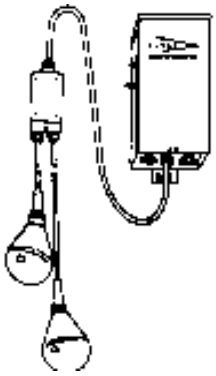

Motors built for submersible pumps

A key to increased reliability

Flygt

ITT Industries
Engineered for life

Flygt submersibles keep their cool

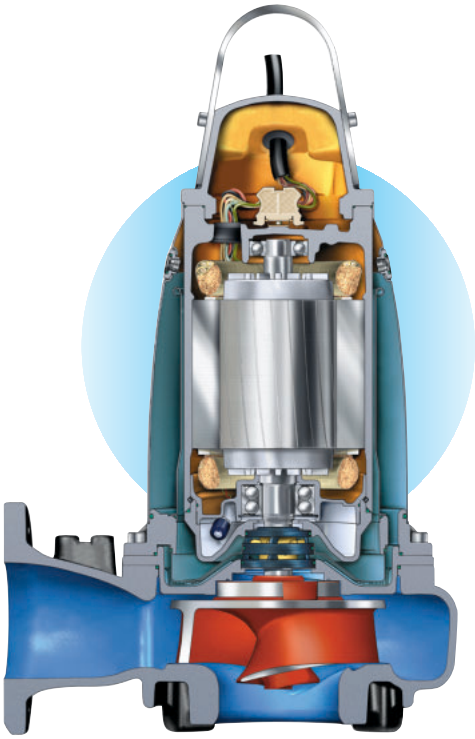

Why do motors fail? Usually, it's due to overheating somewhere in the motor.

To reduce the risk of heat build-up, we've incorporated a number of interesting features. Improvements that you won't find in standard, off-the-shelf motors. Innovations that together add up to a motor that will perform reliably for years and years.

Moving the heat out

When manufacturers use standard, off-the-shelf motors in submersible pumps, heat that builds up in the middle of the unit isn't transferred outwards in an efficient way (see illustration).

The problem is how to bring this heat – which is a natural loss in any electrical device – closer to the surrounding, cooling water.

Our engineers, faced with a fixed motor volume, came up with an ingenious solution: they made the rotor bigger, and the stator smaller. In this way they shifted the losses from the rotor, out to the stator.

Their reasoning went like this: because the stator is in direct metal-to-metal contact with the stator housing, the heat would migrate quickly from the stator to the cooler housing. And because the housing is surrounded by water, the heat is efficiently dissipated.

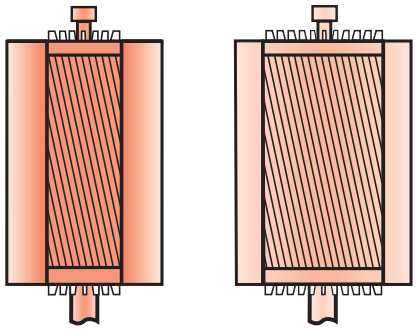

Standard motor design *Flygt's new design*

Compact, reliable insulation

The standard way to insulate windings in the stator is to dip them in a bath of varnish. This technique, however, can leave pockets of air trapped in the windings. And air doesn't transfer heat very well.

At ITT Flygt, we use a technique known as trickle impregnation. As the name suggests, we allow the resin to trickle down through the wire windings. The capillary force between the densely packed wires draws the resin from strand to strand, filling the gaps and eliminating the pockets of air.

The result, as you can see in the picture to the right, is a compact mass, with all the spaces between the wires filled by the resin. Also, the resin contains no solvent and so has negligible environmental impact.

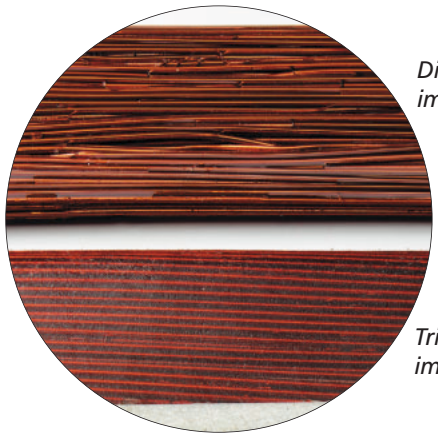

Dip impregnated

Trickle impregnated

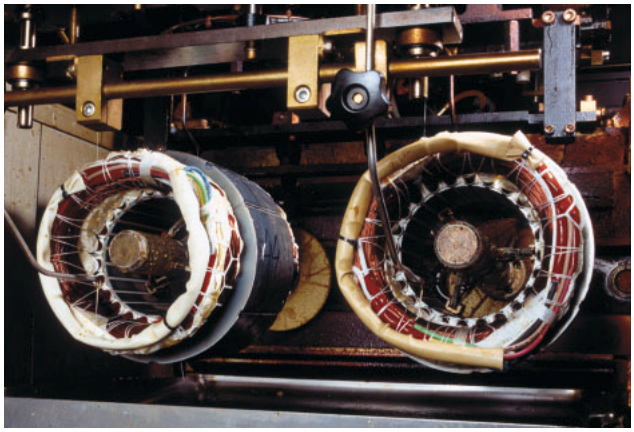

Trickle impregnation produces a solid and reliable insulation

The right motor for the job

At ITT Flygt, we offer a complete range of motors. In this way, you always get a motor that's correctly dimensioned for your specific applications.

Type of motor:	squirrel cage
Motor range:	0.4-600kW
No. of poles:	2-16
Voltage range:	110V–4160V

Extending motor lifetime

The average operating temperature in a motor is about 120°C. However, the resin used to insulate the stator in all Flygt products, apart from our smallest pumps, is rated to run at 180°C. This is known as insulation class H which is the highest class for normal use. So, why do we insist on a margin of 60°C?

The reason is simple: for every 10°C a motor runs under its insulation class, motor life is doubled. Of course, over a long period of time mechanical stresses and strains can also influence estimates of how long a motor will last. But because we have selected the highest insulation class, the theoretical lifetime of a Flygt motor is well above 20 years.

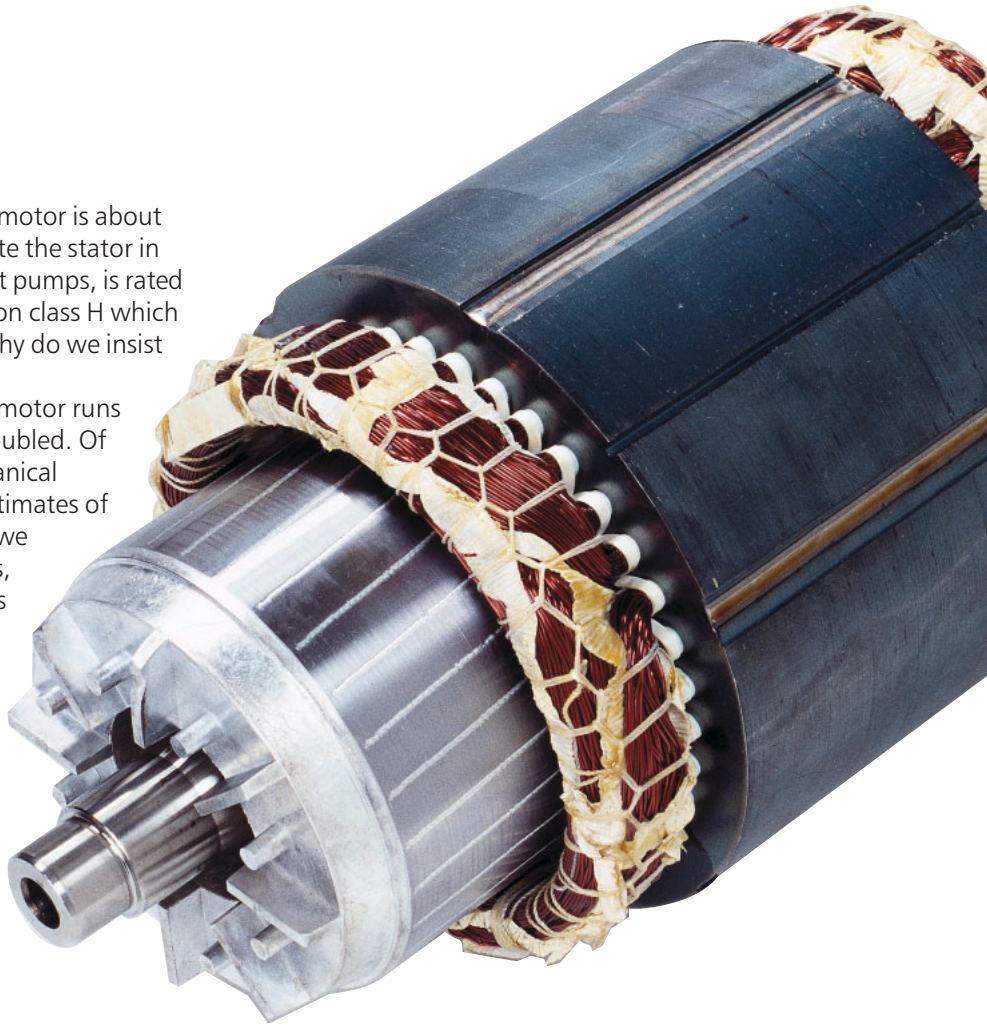

Efficient heat transfer

A layer of air between the stator and stator housing acts like insulation, trapping the heat. At ITT Flygt, we fix the stator into place with a technique that ensures a good tight fit and thereby eliminates this layer of air.

Because it's such a snug fit, you get good metal-to-metal contact between the stator and the housing. And this means that heat is transferred efficiently to the outer shell, which is surrounded by water.

Bettering the best

If you're still not convinced, look at it this way. Manufacturers of off-the-shelf motors don't have submersible pumps in mind when they design their motors and work out how to cool them.

We, on the other hand, design and manufacture motors for one specific application. Consequently, we make sure that the cooling method, insulation material and dozens of other design details are all selected for one single purpose: to run in a submersible pump for years without electrical or mechanical problems.

But the best can be bettered. We see improvement as a continuous process: our engineers are equipped with the latest design tools to produce the best submersible motors, for the best submersible pumps.

For example, we've just upgraded motors in the 0.4-75kW range. Here we've managed to boost output by up to 20 per cent, while actually lowering the temperature in the rotor. And this, of course, extends lifetime still further.

Advanced manufacturing processes ensure high quality and short lead times

ITT Flygt is the world's leading manufacturer and supplier of submersible pumps and mixers. Our products are used in wastewater, sewage treatment, agriculture, aqua-culture, irrigation and water attractions, among other areas. ITT Flygt has 40 sales companies and we are represented in over 130 countries around the world.

FLYGT

www.flygt.com

894325 Motors built for submersible pumps 02.02.Eng.1M.11.03 © ITT FYGT AB KT 231209

WASTE-TECH
a division of KUSTERS ZIMA

5.3

ANCHOR BOLT DETAILS

OPERATION & MAINTENANCE

WENATCHEE WWTP IMPROVEMENTS
PROJECT PO913
WENATCHEE, WA

SECTION 11092 – PERFORATED PLATE SCREENS
SECTION 11095 – SCREENINGS WASHER COMPACTOR

ANCHOR BOLT DETAILS

Manufacturer:	Hilti
Type:	Chemical Anchor
Model:	HIT-RE 500
Capsule No.:	00241382
Size:	¾” x 10 NC/Chisel Point
Material:	316 Stainless Steel

HIT-RE 500-SD Epoxy Adhesive Anchoring System 4.2.6

4.2.6.1 Product Description

4.2.6.1	Product Description
4.2.6.2	Material Specifications
4.2.6.3	Strength Design
4.2.6.4	Technical Data
4.2.6.5	Installation Instructions
4.2.6.6	Ordering Information
4.2.6.7	Sample Calculations

Fastener Components

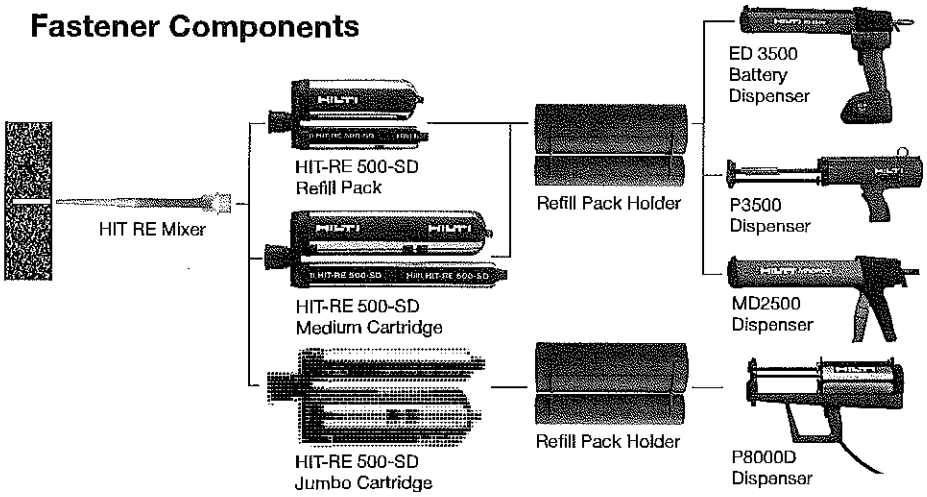

Listings/Approvals

ICC-ES (International Code Council)
ESR-2322

NSF/ANSI Std 61
certification for use in potable water

European Technical Approval
ETA-07/0260

Hilti HIT-RE 500-SD Adhesive Anchoring System is an injectable two-component epoxy adhesive. The two components are kept separate by means of a dual-cylinder foil pack attached to a manifold. The two components combine and react when dispensed through a static mixing nozzle attached to the manifold.

Hilti HIT-RE 500-SD Adhesive Anchoring System may be used with continuously threaded rod, Hilti HIS-N and HIS-RN internally-threaded inserts or deformed reinforcing bar installed in cracked or uncracked concrete. The primary components of the Hilti Adhesive Anchoring System are:

- Hilti HIT-RE 500-SD adhesive packaged in foil packs
- Adhesive mixing and dispensing equipment
- Equipment for hole cleaning and adhesive injection

Product Features

- Superior bond performance
- Seismic qualified per IBC®/IRC® 2006, IBC®/IRC® 2003, IBC®/IRC® 2000 and UBC® 1997 (ICC-ES AC308). Please refer to ESR-2322 (ICC-ES AC308) for Seismic Design Category A through F
- Use in diamond cored or pneumatic drilled holes and under water up to 165 feet (50 m)
- Meets requirements of ASTM C 881-90, Type IV, Grade 2 and 3, Class A, B, C except gel times
- Meets requirements of AASHTO specification M235, Type IV, Grade 3, Class A, B, C except gel times
- Mixing tube provides proper mixing, eliminates measuring errors and minimizes waste
- Contains no styrene; virtually odorless
- Extended temperature range from 41°F to 104°F (5°C to 40°C)
- Excellent weathering resistance; Resistance against elevated temperatures

Code Compliance

IBC®/IRC® 2006 (ICC-ES AC308)
IBC®/IRC® 2003 (ICC-ES AC308)
IBC®/IRC® 2000 (ICC-ES AC308)
UBC® 1997 (ICC-ES AC308)
LEED®: Credit 4.1-Low Emitting Materials

The Leadership in Energy and Environmental Design (LEED®) Green Building Rating system™ is the nationally accepted benchmark for the design, construction and operation of high performance green buildings.

Components

HAS Threaded Rods

HIS Internally Threaded Inserts

Rebar (supplied by contractor)

4.2.6 HIT-RE 500-SD Epoxy Adhesive Anchoring System

Guide Specifications

Master Format Section:

03250 (Concrete accessories)

Related Sections:

03200 (Concrete Reinforcing-Reinforcing Accessories)
05050 (Metal Fabrication)
05120 (Structural Steel; Masonry Accessories)

Injectable adhesive shall be used for installation of all reinforcing steel dowels or threaded anchor rods and inserts into new or existing concrete. Adhesive shall be furnished in side-by-side refill packs which keep component A and component B separate. Side-by-side packs shall be designed to compress during use to minimize waste volume. Side-by-side packs shall also be designed to accept static mixing nozzle which thoroughly blends component A and component B and allows injection directly into drilled hole. Only injection tools and static mixing nozzles as recommended by manufacturer shall be used. Manufacturer's instructions shall be followed. Injection adhesive shall be formulated to include resin and hardener to provide optimal curing speed as well as high strength and stiffness. Typical curing time at 68°F (20°C) shall be approximately 12 hours.

Injection adhesive shall be HIT-RE 500-SD, as furnished by Hilti.

Anchor Rods shall be furnished with chamfered ends so that either end will accept a nut and washer. Alternatively, anchor rods shall be furnished with a 45 degree chisel point on one end to allow for easy insertion into the adhesive-filled hole. Anchor rods shall be manufactured to meet the following requirements:

1. ISO 898 Class 5.8
2. ASTM A 193, Grade B7 (high strength carbon steel anchor);
3. AISI 304 or AISI 316 stainless steel, meeting the requirements of ASTM F 593 (condition CW).

Special order length HAS Rods may vary from standard product.

Nuts and Washers of other grades and styles having specified proof load stresses greater than the specified grade and style are also suitable. Nuts must have specified proof load stresses equal to or greater than the minimum tensile strength of the specified threaded rod.

4.2.6.2 Material Specifications

Bond Strength ASTM C882-91[1] 2 day cure 7 day cure	 12.4 MPa 12.4 MPa	 1800 psi 1800 psi
Compressive Strength ASTM D-695-96[1]	82.7 MPa	12,000 psi
Compressive Modulus ASTM D-695-96[1]	1493 MPa	0.22 x 10^6 psi
Tensile Strength 7 day ASTM D-638-97	43.5 MPa	6310 psi
Elongation at break ASTM D-638-97	2.0%	2.0%
Heat Deflection Temperature ASTM D-648-95	63°C	146°F
Absorption ASTM D-570-95	0.06%	0.06%
Linear Coefficient of Shrinkage on Cure ASTM D-2566-86	0.004	0.004
Electrical resistance DIN IEC 93 (12.93)	6.6 x 10^{13} Ω/m	1.7 x 10^{12}Ω/in.

1 Minimum values obtained as a result of three cure temperatures (23°, 40°, 60°F)

4.2.6 HIT-RE 500-SD Epoxy Adhesive Anchoring System

Table 2 — TENSILE PROPERTIES OF COMMON CARBON STEEL THREADED ROD MATERIALS[1]

THREADED ROD SPECIFICATION		Minimum specified ultimate strength f_{uta}	Minimum specified yield strength 0.2% offset f_{ya}	f_{uta}/f_{ya}	Elongation, min. %[5]	Reduction of Area, min. %	Specification for nuts[6]
ASTM A 193[2] Grade B7 ≤ 2-1/2 in. (≤ 64 mm)	psi (MPa)	**125,000** (862)	**105,000** (724)	1.19	16	50	ASTM A 563 Grade DH
ASTM F 568M[3] Class 5.8 M5 (1/4 in.) to M24 (1 in.) (equivalent to ISO 898-1)	psi (MPa)	**72,500** (500)	**58,000** (400)	1.25	10	35	DIN 934 (8-A2K) ASTM A 563 Grade DH[7]
ISO 898-1[4] Class 8.8	MPa (psi)	**800** (116,000)	**640** (92,800)	1.25	12	52	DIN 934 (8-A2K)

1 Hilti HIT-RE 500-SD may be used in conjunction with all grades of continuously threaded carbon steel rod (all-thread) that conform to the code and that have thread characteristics comparable with ANSI B1.1 UNC Coarse Thread Series or ANSI B1.13M M Profile Metric Thread Series. Values for threaded rod types and associated nuts supplied by Hilti are provided here.

2 Standard Specification for Alloy-Steel and Stainless Steel Bolting Materials for High-Temperature Service

3 Standard Specification for Carbon and Alloy Steel Externally Threaded Metric Fasteners

4 Mechanical properties of fasteners made of carbon steel and alloy steel — Part 1: Bolts, screws and studs

5 Based on 2-in. (50 mm) gauge length except for A193 and A449, which are based on a gauge length of 4D and ISO 898 which is based on 5D.

6 Nuts of other grades and styles having specified proof load stresses greater than the specified grade and style are also suitable. Nuts must have specified proof load stresses equal to or greater than the minimum tensile strength of the specified threaded rod.

7 Nuts for fractional rods.

Table 3 — TENSILE PROPERTIES OF COMMON STAINLESS STEEL THREADED ROD MATERIALS[1]

THREADED ROD SPECIFICATION		Minimum specified ultimate strength f_{uta}	Minimum specified yield strength 0.2% offset f_{ya}	f_{uta}/f_{ya}	Elongation, min. %	Reduction of Area, min. %	Specification for nuts[4]
ASTM F 593[2] CW1 (316) 1/4 to 5/8 in.	psi (MPa)	**100,000** (689)	**65,000** (448)	1.54	20	-	F 594
ASTM F 593[2] CW2 (316) 3/4 to 1-1/2 in.(MPa)	psi (MPa)	**85,000** (586)	**45,000** (310)	1.89	25	-	F 594
ISO 3506-1[3] A4-70 M8 – M24	MPa (psi)	**700** (101,500)	**450** (65,250)	1.56	40	-	ISO 4032
ISO 3506-1[3] A4-50 M27 – M30	MPa (psi)	**500** (72,500)	**210** (30,450)	2.00	40	-	ISO 4032

1 Hilti HIT-RE 500-SD may be used in conjunction with all grades of continuously threaded stainless steel rod (all-thread) that conform to the code and that have thread characteristics comparable with ANSI B1.1 UNC Coarse Thread Series or ANSI B1.13M M Profile Metric Thread Series. Values for threaded rod types and associated nuts supplied by Hilti are provided here.

2 Standard Steel Specification for Stainless Steel Bolts, Hex Cap Screws, and Studs

3 Mechanical properties of corrosion-resistant stainless steel fasteners – Part 1: Bolts, screws and studs

4 Nuts of other grades and styles having specified proof load stresses greater than the specified grade and style are also suitable. Nuts must have specified proof load stresses equal to or greater than the minimum tensile strength of the specified threaded rod. Differing grades of steel may affect corrosion resistance.

4.2.6 HIT-RE 500-SD Epoxy Adhesive Anchoring System

Table 7 — STEEL DESIGN INFORMATION FOR FRACTIONAL THREADED ROD[1]

DESIGN INFORMATION		Symbol	Units	Nominal rod diameter (in.)						
				3/8	1/2	5/8	3/4	7/8	1	1-1/4
Rod O.D.		d	**in.** (mm)	**0.375** (9.5)	**0.5** (12.7)	**0.625** (15.9)	**0.75** (19.1)	**0.875** (22.2)	**1** (25.4)	**1.25** (31.8)
Rod effective cross-sectional area		A_{se}	**in.^{2}** (mm^2)	**0.0775** (50)	**0.1419** (92)	**0.2260** (146)	**0.3345** (216)	**0.4617** (298)	**0.6057** (391)	**0.9691** (625)
ISO 898-1 Class 5.8[2]	Nominal strength as governed by steel strength	N_{sa}	**lb** (kN)	**5,619** (25.0)	**10,288** (45.8)	**16,385** (72.9)	**24,251** (107.9)	**33,472** (148.9)	**43,912** (195.3)	**70,258** (312.5)
		V_{sa}	**lb** (kN)	**2,809** (12.5)	**6,173** (27.5)	**9,831** (43.7)	**14,550** (64.7)	**20,083** (89.3)	**26,347** (117.2)	**42,155** (187.5)
	Reduction for seismic shear	$\alpha_{V,seis}$	-	0.70						
	Strength reduction factor ϕ for tension[2]	ϕ	-	0.65						
	Strength reduction factor ϕ for shear[2]	ϕ	-	0.60						
ASTM A 193 B7[2]	Nominal strength as governed by steel strength	N_{sa}	**lb** (kN)	**9,687** (43.1)	**17,737** (78.9)	**28,249** (125.7)	**41,812** (186.0)	**57,711** (256.7)	**75,711** (336.8)	**121,135** (538.8)
		V_{sa}	**lb** (kN)	**4,844** (21.5)	**10,642** (47.3)	**16,950** (75.4)	**25,087** (111.6)	**34,627** (154.0)	**45,426** (202.1)	**72,681** (323.3)
	Reduction for seismic shear	$\alpha_{V,seis}$	-	0.70						
	Strength reduction factor ϕ for tension[2]	ϕ	-	0.75						
	Strength reduction factor ϕ for shear[2]	ϕ	-	0.65						
ASTM F593, CW Stainless[2]	Nominal strength as governed by steel strength	N_{sa}	**lb** (kN)	**7,750** (34.5)	**14,190** (63.1)	**22,600** (100.5)	**28,432** (126.5)	**39,244** (174.6)	**51,483** (229.0)	**82,372** (366.4)
		V_{sa}	**lb** (kN)	**3,875** (17.2)	**8,514** (37.9)	**13,560** (60.3)	**17,059** (75.9)	**23,546** (104.7)	**30,890** (137.4)	**49,423** (219.8)
	Reduction for seismic shear	$\alpha_{V,seis}$	-	0.70						
	Strength reduction factor ϕ for tension[2]	ϕ	-	0.75						
	Strength reduction factor ϕ for shear[2]	ϕ	-	0.65						

For SI: 1 inch = 25.4 mm, 1 lbf = 4.448 N, 1 psi = 0.006897 MPa

For pound-inch units: 1 mm = 0.03937 inches, 1 N = 0.2248 lbf, 1 MPa = 145.0 psi

1 Values provided for common rod material types based on published strengths and calculated in accordance with ACI 318-05 Eq. (D-3) and Eq. (D-20). Other material specifications are admissible. Use nuts and washers appropriate for the rod strength. Differing grades of steel may affect corrosion resistance.

2 For use with the load combinations of ACI 318-05 Section 9.2. See ACI 318-05 Section D.4.4.

HIT-RE 500-SD Epoxy Adhesive Anchoring System 4.2.6

Table 8 — CONCRETE BREAKOUT DESIGN INFORMATION FOR FRACTIONAL THREADED ROD IN HOLES DRILLED WITH A HAMMER DRILL AND CARBIDE BIT[1]

DESIGN INFORMATION	Symbol	Units	Nominal rod diameter (in.)						
			3/8	1/2	5/8	3/4	7/8	1	1-1/4
Effectiveness factor for cracked concrete	$k_{c,cr}$	**in-lb** (SI)	**17** (7.1)						
Effectiveness factor for un-cracked concrete	$k_{c,uncr}$	**in-lb** (SI)	**24** (10)						
Min. anchor spacing	s_{min}	**in.** (mm)	**1-7/8** (48)	**2-1/2** (64)	**3-1/8** (79)	**3-3/4** (95)	**4-3/8** (111)	**5** (127)	**6-1/4** (159)
Min. edge distance	c_{min}	**in.** (mm)	**1-7/8** (48)	**2-1/2** (64)	**3-1/8** (79)	**3-3/4** (95)	**4-3/8** (111)	**5** (127)	**6-1/4** (159)
Minimum member thickness	h_{min}	**in.** (mm)	h_{ef} + **1-1/4** (h_{ef} + 30)		$h_{ef} + 2d_o$				
Critical edge distance — splitting (for un-cracked concrete)	c_{ac}	-	See ***Strength Design*** provisions above						
Strength reduction factor for tension, concrete failure modes, Condition B[2]	ϕ	-	0.65						
Strength reduction factor for shear, concrete failure modes, Condition B[2]	ϕ	-	0.70						

For SI: 1 inch = 25.4 mm, 1 lbf = 4.448 N, 1 psi = 0.006897 MPa

For pound-inch units: 1 mm = 0.03937 inches, 1 N = 0.2248 lbf, 1 MPa = 145.0 psi

1 For additional setting information, see installation instructions.

2 Values provided for post-installed anchors with category as determined from ACI 355.2 given for Condition B without supplemenlary reinforcement.

4.2.6 HIT-RE 500-SD Epoxy Adhesive Anchoring System

Table 9 — BOND STRENGTH DESIGN INFORMATION FOR FRACTIONAL THREADED ROD IN HOLES DRILLED WITH A HAMMER DRILL AND CARBIDE BIT[1,4]

DESIGN INFORMATION		Symbol	Units	Nominal rod diameter (in.)						
				3/8	1/2	5/8	3/4	7/8	1	1-1/4
Temperature range A[3]	Characteristic bond strength and minimum anchor embedment in cracked concrete	$\tau_{k,cr}$	psi (N/mm²)	1,092 (7.5)	1,073 (7.4)	1,044 (7.2)	999 (6.9)	917 (6.3)	852 (5.9)	732 (5.0)
		$h_{ef,min}$	in. (mm)	2.43 (62)	2.81 (71)	3.14 (80)	3.44 (87)	3.71 (94)	4.0 (102)	5.0 (127)
	Characteristic bond strength and minimum anchor embedment in un-cracked concrete	$\tau_{k,uncr}$	psi (N/mm²)	2,283 (15.7)	2,236 (15.4)	2,142 (14.8)	2,067 (14.3)	2,002 (13.8)	1,946 (13.4)	1,862 (12.8)
		$h_{ef,min}$	in. (mm)	2.43 (62)	2.81 (71)	3.14 (80)	3.44 (87)	3.71 (94)	4.0 (102)	5.0 (127)
Temperature range B[3]	Characteristic bond strength and minimum anchor embedment in cracked concrete[2]	$\tau_{k,cr}$	psi (N/mm²)	444 (3.1)	431 (3.0)	379 (2.6)	345 (2.4)	316 (2.2)	294 (2.0)	260 (1.8)
		$h_{ef,min}$	in. (mm)	1.73 (44)	2.20 (56)	3.61 (66)	3.01 (76)	3.50 (89)	4.0 (102)	5.0 (127)
	Characteristic bond strength and minimum anchor embedment in un-cracked concrete[2]	$\tau_{k,uncr}$	psi (N/mm²)	788 (5.4)	772 (5.3)	739 (5.1)	714 (4.9)	691 (4.8)	672 (4.6)	643 (4.4)
		$h_{ef,min}$	in. (mm)	1.73 (44)	2.20 (56)	3.61 (66)	3.01 (76)	3.50 (89)	4.0 (102)	5.0 (127)
Permissible installation conditions	Dry concrete	ϕ_d	-	0.65	0.65	0.65	0.65	0.55	0.55	0.55
	Water-saturated concrete	ϕ_{ws}	-	0.55	0.55	0.45	0.45	0.45	0.45	0.45
		κ_{ws}	-	1.0	1.0	1.0	1.0	1.0	0.99	0.94
	Water-filled hole	ϕ_{wf}	-	0.45	0.45	0.45	0.45	0.45	0.45	0.45
		κ_{wf}	-	1.00	1.00	0.96	0.91	0.87	0.84	0.79
	Underwater application	ϕ_{uw}	-	0.45	0.45	0.45	0.45	0.45	0.45	0.45
		κ_{uw}	-	0.95	0.94	0.94	0.93	0.92	0.92	0.91

For SI: 1 inch = 25.4 mm, 1 lbf = 4.448 N, 1 psi = 0.006897 MPa

For pound-inch units: 1 mm = 0.03937 inches, 1 N = 0.2248 lbf, 1 MPa = 145.0 psi

1 Bond strength values correspond to concrete compressive strength range 2,500 psi ≤ f'c ≤ 4,500 psi. For 4,500 psi ≤ f'c ≤ 6,500 psi, tabulated characteristic bond strength may be increased by 6%. For 6,500 psi ≤ f'c ≤ 8,000 psi, tabulated characteristic bond strength may be increased by 10%.

2 Bond strength values are for sustained loads including dead and live loads. For short-term loads including wind and seismic, bond strengths may be increased 40%.

3 Temperature range A: Max. short term temperature = 110°F (43°C), max. long term temperature = 80°F (26°C).

Temperature range B: Max. short term temperature = 162°F (72°C), max. long term temperature = 110°F (43°C).

Short term elevated concrete temperatures are those that occur over brief intervals, e.g., as a result of diurnal cycling. Long term concrete temperatures are roughly constant over significant periods of time.

4 For structures assigned to SDC C, D, E or F, bond strength values shall be multiplied by $\alpha_{N,seis}$ = 0.65.

HIT-RE 500-SD Epoxy Adhesive Anchoring System 4.2.6

Table 10 — BOND STRENGTH DESIGN INFORMATION FOR FRACTIONAL THREADED ROD IN HOLES DRILLED WITH A CORE DRILL[1,4]

DESIGN INFORMATION		Symbol	Units	Nominal rod diameter (in.)						
				3/8	1/2	5/8	3/4	7/8	1	1-1/4
Temperature range A[3]	Characteristic bond strength and minimum anchor embedment in un-cracked concrete	$\tau_{k,uncr}$	**psi** (N/mm²)	**1,740** (12.0)	**1,703** (11.7)	**1,553** (10.7)	**1,441** (9.9)	**1,356** (9.4)	**1,282** (8.8)	**1,169** (8.1)
		$h_{ef,min}$	**in.** (mm)	**2.43** (62)	**2.81** (71)	**3.14** (80)	**3.44** (87)	**3.71** (94)	**4.0** (102)	**5.0** (127)
Temperature range B[3]	Characteristic bond strength and minimum anchor embedment in un-cracked concrete[2]	$\tau_{k,uncr}$	**psi** (N/mm²)	**601** (4.1)	**588** (4.1)	**536** (3.7)	**497** (3.4)	**468** (3.2)	**442** (3.1)	**404** (2.8)
		$h_{ef,min}$	**in.** (mm)	**1.57** (40)	**2.0** (51)	**2.5** (64)	**3.0** (76)	**3.5** (89)	**4.0** (102)	**5.0** (127)
Permissible installation conditions	Dry concrete	ϕ_d	-	0.65	0.65	0.55	0.55	0.55	0.45	0.45
	Water-saturated concrete	ϕ_{ws}	-	0.55	0.55	0.45	0.45	0.45	0.45	0.45
		κ_{ws}	-	1.00	1.00	1.00	1.00	1.00	0.95	0.88

For SI: 1 inch = 25.4 mm, 1 lbf = 4.448 N, 1 psi = 0.006897 MPa

For pound-inch units: 1 mm = 0.03937 inches, 1 N = 0.2248 lbf, 1 MPa = 145.0 psi

1 Bond streogth values correspond to concrete compressive strength range 2,500 psi ≤ f'c ≤ 4,500 psi. For 4,500 psi ≤ f'c ≤ 6,500 psi, tabulated characteristic bond strength may be increased by 6%. For 6,500 psi ≤ f'c ≤ 8,000 psi, tabulated characteristic bond may be increased by 10%.

2 Characteristic bond strengths are for sustained loads including dead and live loads. For short-term loads including wind and seismic, bond strengths may be increased 40%.

3 Temperature range A: Max. short term temperature = 110°F (43°C), max. long term temperature = 80°F (26°C).

Temperature range B: Max. short term temperature = 162°F (72°C), max. long term temperature = 110°F (43°C).

Short term elevated concrete temperatures are those that occur over brief intervals, e.g., as a result of diurnal cycling. Long term concrete temperatures are roughly constant over significant periods of time.

4 Bond strength values applicable to SDC A and B only.

4.2.6 HIT-RE 500-SD Epoxy Adhesive Anchoring System

4.2.6.5 Installation Instructions

Adhesive anchoring system for fastenings in normal weight concrete

Prior to use of product follow instructions for use and recommended safety precautions.

- Check expiration date: See expiration date imprint on foilpack manifold. (Month/Year). Do not use expired product.
- Foil pack temperature: Must be between 41°F and 104°F (5°C - 40°C) when in use.
- Base material temperature at time of installation: Must be between 41°F and 110°F (5°C - 43°C).
- Instructions for transport and storage: Keep in a cool, dry and dark place between 41°F and 77°F (5°C - 25°C).
- Material Safety Data Sheet: Review the MSDS before use.

Installation Instructions: Follow the pictograms 1-14 for the sequence of operations and refer to tables 1-3 for setting details. For any application not covered by this document (e.g. "h_{ef}" beyond values specified in setting details), contact Hilti.

Installation flow Chart

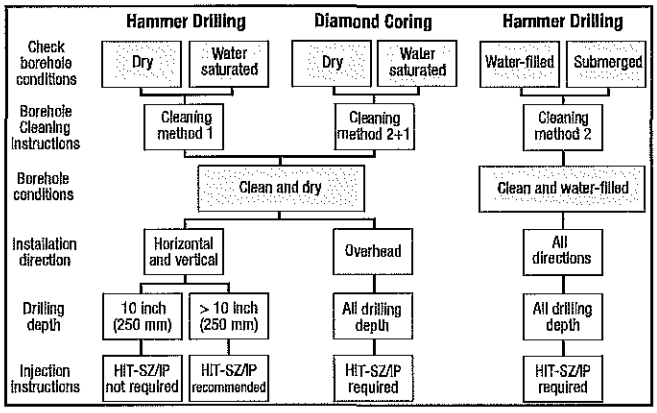

1. Drill hole normal to the surface with a hammer drill set in rotation-hammer mode using an appropriately sized carbide drill bit, or with a core rig and an appropriately sized diamond core bit, to the required embedment depth. See tables describing setting details. **(Drill bits must conform to ANSI B212-1994.)**

2-4. **Clean hole:** Cleaning method has to be decided based on drilling method and borehole conditions (see flow chart above). Just before setting an anchor/rebar, the borehole must be free of dust and debris by one of the following methods:

Method 1 — for dry or water saturated concrete (refer to pictograms):

- **Blow** from the back of the borehole with oil-free compressed air (min. 90psi at 3.5 CFM (6 bar at 6 m³/h)) fully retracting the air extension 2 times until return air stream is free of noticeable dust.
- **Brush 2 times** with the specified brush size (brush Ø = borehole Ø) by inserting the round steel brush to the back of the borehole in a twisting motion and removing it. The brush should resist insertion into the borehole — if not, the brush is too small and must be replaced with the proper brush diameter.
- **Blow** again with compressed air 2 times until return air stream is free of noticeable dust.

Method 2 — for water filled boreholes, submerged concrete or diamond cored boreholes:

- **Flush hole 2 times** by inserting a water hose (water-line pressure) to the back of the borehole until water runs clear.
- **Brush 2 times** with the specified brush size (brush Ø = borehole Ø) by inserting the round steel brush to the back of the borehole with a twisting motion and removing it. The brush should resist insertion into the borehole — if not, the brush is too small and must be replaced with the proper brush diameter.
- **Flush again** 2 times until water runs clear.
- **Important!** For **diamond cored boreholes** and **if a dry borehole is required for injection (e.g. water flows into cleaned borehole),** continue with borehole cleaning as described by methode 1. **Remove all standing water** completely (i.e. vacuum, compressed air or other appropriate procedure). To attain a dried borehole, a Hilti HIT-DL air nozzle attachment is recommended for borehole depth up to 10 inch (250 mm) and required for borehole depth > 10 inch (250 mm).

The borehole must be free of dust, debris, ice, oil, grease and other contaminants prior to adhesive injection. Inadequate borehole cleaning = poor load values

5. **Insert foil pack in foil pack holder.** Never use damaged foil packs and/or damaged or unclean foil pack holders.

6. **Tightly attach Hilti HIT-RE-M mixer to foil pack manifold.** Attach new mixer prior to dispensing a new foil pack (snug fit). Do not modify the mixer in any way. Make sure the mixing element is in the mixer. Use only the mixer supplied with the adhesive.

7. **Insert foil pack holder with foil pack into HIT-dispenser.** Push release trigger, retract plunger and insert foil pack holder into the appropriate Hilti dispenser.

8. **Discard initial adhesive.** The foil pack opens automatically as dispensing is initiated. Depending on the size of the foil pack an initial amount of adhesive has to be discarded. See pictogram 8 for discard quantities. If a new mixer is installed onto a previously-opened foil pack, the first trigger pulls must also be discarded as described above. For each new foil pack a new mixer must be used.

9-10. **Inject adhesive from the back of the borehole without forming air voids:**

Verify if borehole conditions have changed (e.g. water in the borehole) after cleaning. If yes, repeat cleaning according points 2 - 4.

- **Inject** the adhesive starting at the back of the borehole (use the extension for deep boreholes), slowly withdraw the mixer with each trigger pull. Fill holes approximately 2/3 full, or as required to ensure that the annular gap between the anchor/rebar and the concrete is completely filled with adhesive along the embedment length. After injection is completed, depressurize the dispenser by pressing the release trigger. This will prevent further adhesive discharge from the mixer.
- **Piston plug injection — HIT-SZ/IP recommended for borehole depth > 10 inch/250 mm. For water filled boreholes or submerged concrete, and overhead installation the piston plugs are required. Assemble HIT-RE-M mixer, extension(s) and appropriately sized piston plug** HIT-SZ/IP. Insert piston plug to back of the borehole and

HIT-RE 500-SD Epoxy Adhesive Anchoring System 4.2.6

inject adhesive as described in the injection method above. During injection the piston plug will be naturally extruded out of the borehole by the adhesive pressure.

11. **Insert anchor/rebar into borehole.** Mark and set anchor/rebar to the required embedment depth. Before use, verify that the anchor/rebar is dry and free of oil and other contaminants. To ease installation, anchor/rebar may be slowly twisted as they are inserted. After installing an anchor/rebar, the annular gap must be completely filled with adhesive. If the borehole is not completely filled along the embedment depth the installation should be rejected. Hilti should be contacted for further information.

    Attention! For overhead applications take special care when inserting the anchor/rebar. Excess adhesive will be forced out of the borehole — take appropriate steps to prevent it from falling onto the installer. Position the anchor/rebar and secure it from moving/falling during the curing time (e.g. wedges). Observe the gel time "t gel", which varies according to temperature of base material. Minor adjustments to the anchor/rebar position may be performed during the gel time. See table.

12. **Do not disturb the anchor/rebar** once the gel time **"t gel"** has elapsed until **"t cure, ini"** has passed.

13. **Preparation work may continue for rebar applications.** Between **"t cure, ini"** and **"t cure, full"** the adhesive has a limited load bearing capacity, do not apply a torque or load on the anchor/rebar during this time.

14. **Apply load/torque after "t cure, full"** has passed, and the fixture to be attached has been positioned.

Partly used foil packs must be used up within **four weeks.** Leave the mixer attached to the foil pack manifold and store under the recommended storage conditions. If reused, attach a new mixer and discard the initial quantity of anchor adhesive as described by point 8.

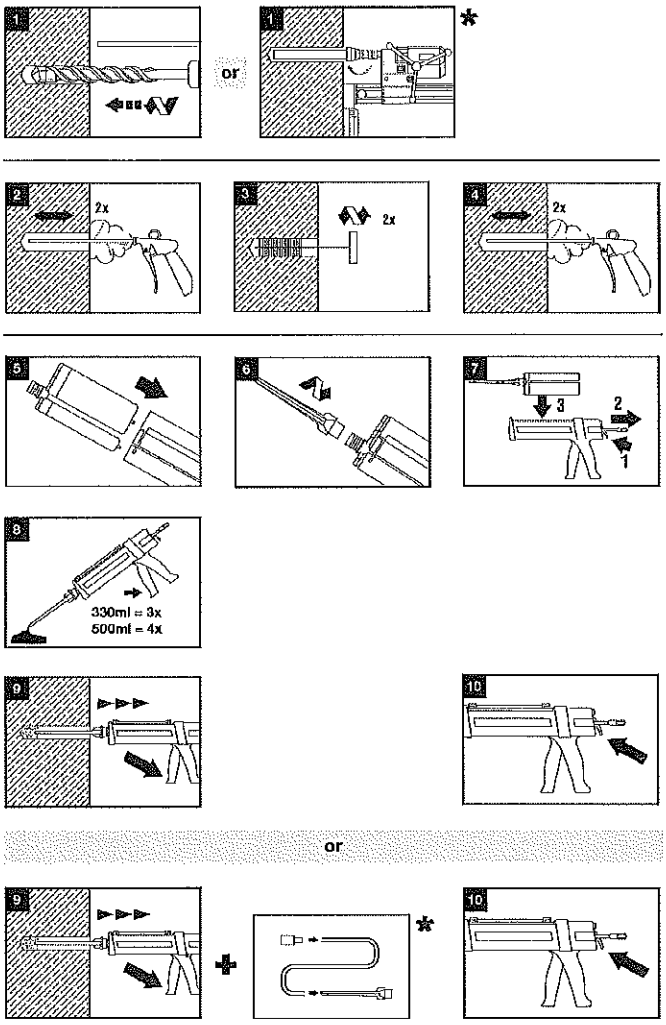

*) Please refer to technical literature (approvals, setting instructions) for detail.

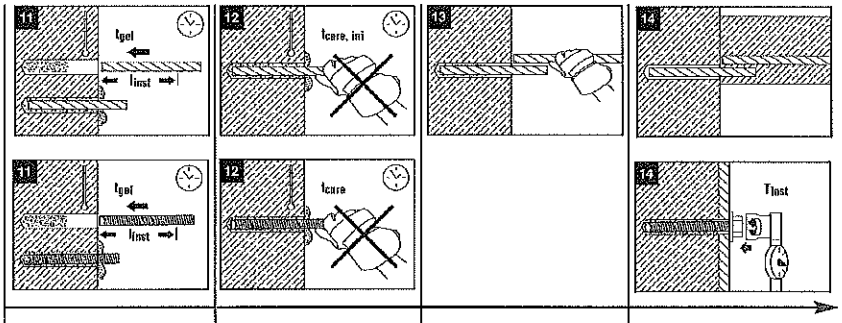

°F	°C	twork / tgel	tcure, ini	tcure, full	Time
41	5	2.5 hrs	18 hrs	72 hrs	
50	10	2 hrs	12 hrs	48 hrs	
59	15	1.5 hrs	8 hrs	24 hrs	
68	20	30 min	6 hrs	12 hrs	
86	30	20 min	4 hrs	8 hrs	
104	40	12 min	2 hrs	4 hrs	

4.2.6 HIT-RE 500-SD Epoxy Adhesive Anchoring System

Table 1 — Setting Details of Hilti HIT-RE 500-SD with threaded rod

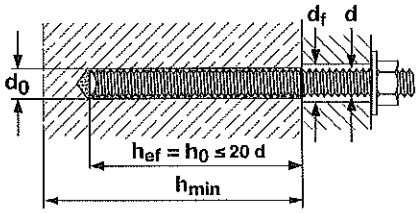

d		d_o	h_{ef} min-max		T_{inst}		d_f	h_{min}
[inch]	[mm]	[inch]	[inch]	[mm]	[ft-lb]	[Nm]	[inch]	[inch]
3/8	9.5	7/16	1-1/2 – 7 1/2	40 – 191	15	20	7/16	h_{ef} + 1-1/4 (30 mm)
1/2	12.7	9/16	2 – 10	51 – 254	30	41	9/16	
5/8	15.9	3/4	2-1/2 – 12-1/2	64 – 318	60	81	11/16	$h_{ef} + 2\ d_0$
3/4	19.1	7/8	3 – 15	76 – 381	100	136	13/16	
7/8	22.2	1	3-1/2 – 17-1/2	89 – 445	125	169	15/16	
1	25.4	1-1/8	4 – 20	102 – 508	150	203	1-1/8	
1-1/4	31.8	1-3/8	5 – 25	127 – 635	200	271	1-3/8	
[mm]		[mm]	[Nm]		[Nm]		[mm]	[mm]
M8		10	40 – 160		10		9	h_{ef} + 30
M10		12	41 – 200		20		12	
M12		14	48 – 240		40		14	
M16		18	64 – 320		80		18	$h_{ef} + 2\ d_0$
M20		24	80 – 400		150		22	
M24		28	96 – 480		200		26	
M27		30	108 – 540		270		30	
M30		35	120 – 600		300		33	

Table 2 — Setting Details of Hilti HIT-RE 500-SD with HIS-N and HIS-RN Inserts

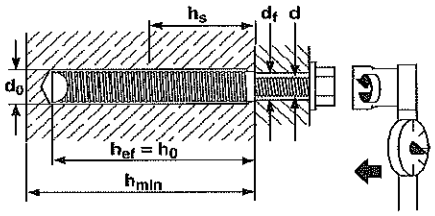

d		d_o	h_{ef}		T_{inst}		d_f	h_{min}	
[inch]	[mm]	[inch]	[inch]	[mm]	[ft-lb]	[Nm]	[inch]	[inch]	[mm]
3/8	9.5	11/16	4 3/8	110	15	20	7/16	5-3/4	150
1/2	12.7	7/8	5	125	30	41	9/16	6-3/4	170
5/8	15.9	1-1/8	6 3/4	170	60	81	11/16	9	230
3/4	19.1	1-1/4	8-1/8	205	100	136	13/16	10-3/4	270
[mm]		[mm]	[mm]		[Nm]		[mm]	[mm]	
M8		14	90		10		9	120	
M10		18	110		20		12	150	
M12		22	125		40		14	170	
M16		28	170		80		18	230	
M20		32	205		150		22	270	

4.2.6 HIT-RE 500-SD Epoxy Adhesive Anchoring System

4.2.6.6 Ordering Information

HIT-RE 500-SD Epoxy Adhesive Anchor System

- First adhesive anchor to comply with the latest building code offering designers a strength design solution for anchors and rebar
- Enables threaded rod and dowelling applications in seismic design conditions under the latest building codes

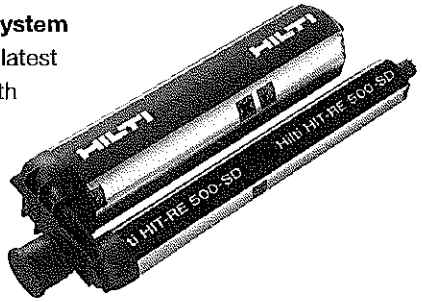

2003 IBC® Compliant Anchor **2006 IBC® Compliant Anchor**

Item No.	Description
241382	HIT-RE 500-SD (11.1 fl oz/330 ml) – 1 pack
	Includes 1 mixer and 3/8" filler tube per package
3425973	HIT-RE 500-SD (11.1 fl oz/330 ml) MC – 25 packs
	Includes 1 mixer and 3/8" filler tube per package
3428744	HIT-RE 500-SD (11.1 fl oz/330 ml)
	Includes 1 MC and mixer and and choice of MD 2000 or MD 2500 dispenser
241383	HIT-RE 500-SD (16.9 fl oz/500 ml) MC – 20 packs
	Includes 1 mixer and 3/8" filler tube per package
3433546	HIT-RE 500-SD (16.9 fl oz/500 ml)
	Includes 2 MC and MD 2500 dispenser
3426080	HIT-RE 500-SD (16.9 fl oz/500 ml)
	Includes 5 MC and ED 3500 dispenser 2.0 Ah Kit

Technical Data

Product	Epoxy Adhesive
Base material temperature	41°F to 120°F (+5°C to 49°C)
Diameter range	3/8" to 1-1/4"
Listings/Approvals	
ICC-ES	ESR 2322
NSF/ANSI standard 61	Certification for potable water
Package volume	
• Volume of HIT-RE 500-SD 11.1 fl oz/330 ml foil pack is 20.1 in³	
• Volume of HIT-RE 500-SD 16.9 fl oz/500 ml foil pack is 30.5 in³	

Gel/Full Cure Time Table (Approximate)

Base Material Temperature °F	°C	t_{gel}	t_{cure}
41	5	2.5 hrs	72 hrs
50	10	2 hrs	48 hrs
59	15	1.5 hrs	24 hrs
68	20	30 min	12 hrs
86	30	20 min	8 hrs
104	40	12 min	4 hrs

Dispensers

Battery Powered

Item No.	Description
3425363	ED 3500 2.0 Ah NiCd Kit
	Includes dispenser, (2) 2.0-Ah NiCd battery, C 7/24 standard charger and accessories in an impact-resistant plastic tool box
273676	ED 3500 Dispenser
	Includes dispenser only in cardboard box
340888	SFB 121 2.0-Ah NiCd Battery for ED 3500
378449	C 7/24 Standard Charger for ED 3500

ED 3500 2.0 Ah Kit

Foil Pack Holder

MD 2500 Manual Dispenser

Manual

Item No.	Description
338853	MD 2500 Manual Dispenser with Foil Pack Holder
	For use with HIT 11.1 fl oz/330ml and 16.9oz/500ml foil packsv
339477	Foil Pack Holder
	Replacement for MD 2500 and ED 3500

Hole Cleaning/Injection Accessories

Imperial

Hole Dia. (d_0)	Round Brush		Injection Piston		Air Nozzle	
Ø [inch]	HIT-RB	Item no.	HIT-SZ (IP)	Item no.	HIT-DL	Item no.
7/16	7/16"	273203		–	–	–
1/2	1/2"	273204	1/2"	274019	1/2"	38237
9/16	9/16"	273205	9/16"	274020	9/16"	38238
5/8	5/8"	273207	5/8"	274021	9/16"	38238
11/16	11/16"	273209	11/16"	274022	11/16"	38239
3/4	3/4"	273210	3/4"	274023	3/4"	38240
7/8	7/8"	273211	7/8"	274024	7/8"	38241
1	1"	273212	1"	274025	1"	38242
1-1/8	1-1/8"	273214	1-1/8"	274026	1"	38242
1-1/4	1-1/4"	273216	1-1/4"	274027	1"	38242
1-3/8	1-3/8"	273217	1-3/8"	274028	1-3/8"	38243
1-1/2	1-1/2"	273218	1-1/2"	274029	1-3/8"	38243
1-3/4	1-3/4"	273219	1-3/4"	274030	1-3/8"	38243

Metric

Hole Dia. (d_0)	Round Brush		Injection Piston		Air Nozzle	
Ø [inch]	HIT-RB	Item no.	HIT-SZ (IP)	Item no.	HIT-DL	Item no.
10	10	380917	–	–	–	–
12	8/12	336548	8/12	351989	8/12	371715
14	10/14	336549	10/14	351990	10/14	371716
16	12/16	336550	12/16	351991	12/16	371717
18	14/18	336551	14/18	351992	14/18	371718
20	16/20	336552	16/20	351993	16/20	371719
22	18/22	370774	18/22	269618	16/20	371719
24	24	380918	24	269619	16/20 3	71719
25	20/25	336553	20/25	351994	20/25	371720
28	28	380919	28	269620	20/25	371720
30	30	380920	30	269621	20/25	371720
32	25/32	336554	25/32	351995	25/32	371721
35	35	380921	35	269622	25/32	371721
37	37	382259	37	271499	25/32	371721
40	40	382260	40	269623	25/32	371721
42	42	382261	42	269624	25/32	371721
45	45	382262	45	269625	25/32	371721
47	47	382264	47	269626	25/32	371721
52	52	382265	52	271476	25/32	371721
55	55	382266	55	271477	25/32	371721

HIT-RB (Round Brush)

HIT-SZ (IP) (Injection Piston)

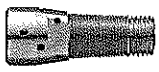

HIT-DL (Air Nozzle)

Contact Hilti for

a complete listing of additional accessories and extensions for air nozzles, brushes and injection pistons to handle embedment.

Hilti Accredited Adhesive Anchor Installer Program – call Hilti for details

4.2.6.7 Sample Calculations

Given:

2 1/2-in. HIT RE 500-SD adhesive anchors subjected to a tension load as shown.

Design objective:

Calculate the design tension resistance for this configuration.

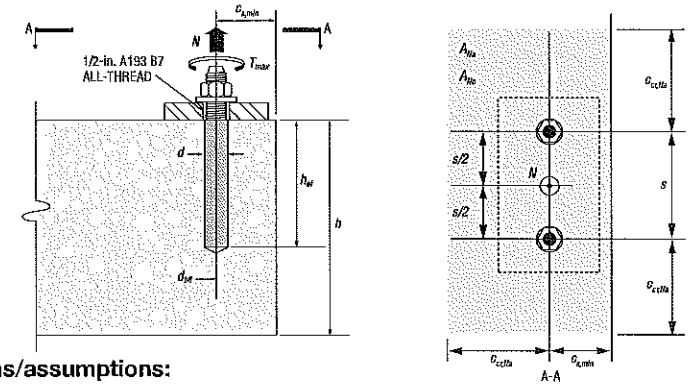

Dimensional parameters:

h_{ef} = 9.0 in.
s = 4.0 in.
$c_{a,min}$ = 2.5 in.
h = 12.0 in.
d = 1/2 in.

Specifications/assumptions:

ASTM A193 B7 all-thread rods, UNC thread, A 563 Grade HD hex nuts.
Normal weight concrete, f'c = 4,000 psi.
Seismic design category (SDC) B
No supplementary reinforcing per ACI 318-05 D.1.
Assume maximum short term (diurnal) base material temperature ≤ 100 0F.
Assume maximum long term base material temperature ≤ 80 0F.
Assume installation in dry concrete and hammer-drilled holes.
Assume concrete will remain uncracked for service life of anchorage.

Calculation per ACI 318-05 Appendix D and this report.	ACI 318 Code Ref.	
Step 1. Check minimum edge distance, anchor spacing and member thickness:	–	
c_{min} = 2.5 in. ≤ ca,min therefore ok.	–	Table 8
s_{min} = 2.5 in. ≤ s therefore ok.	–	Table 8
$h_{min} = h_{ef} + 1.25 = 9 + 1.25 = 10.25$ in. ≤ h therefore ok.	–	Table 8
Step 2. Calculate steel strength: $N_{sa} = n \times A_{se} \times f_{uta}$	D.5.1.2	–
B7 rods are considered ductile per ACI 318-05. $\therefore \Phi = 0.75$	D.1 & D.4.4a	–
$\therefore \Phi N_{sa} = \Phi \times n \times A_{se} \times f_{uta} = 0.75 \times 2 \times 0.1419 \times 125{,}000 = 26{,}606$ lb = 26.6 k		
or, using Table 7, $\therefore \Phi N_{sa} = 0.75 \times 2 \times 17{,}737 = 26.6$ k	D.5.1.2	Table 7
Step 3. Determine concrete breakout strength: $N_{cbg} = \frac{A_{Nc}}{A_{NcO}} (\Psi_{ec,N})(\Psi_{ed,N})(\Psi_{c,N})(\Psi_{cp,N})(N_b)$	D.5.2.1 & Eq. (D-5)	–
$A_{Nc} = (3h_{ef} + s)(1.5h_{ef} + c_{a,min}) = (27 + 4)(13.5 + 2.5) = 496$ in^2	–	–
$A_{NcO} = 9h_{ef}^2 = 729$ in^2	D.5.2.1 & Eq. (D-5)	–
$\Psi_{ec,N}$ = no eccentricity of tension load with respect to tension-loaded anchors	D.5.2.4	
$\Psi_{ed,N} = 0.7 + 0.3 \times \frac{c_{a,min}}{1.5\,h_{ef}}$ for $c_{a,min} \le 1.5\,h_{ef}$	D.5.2.1 & & Eq. (D-5)	–
$c_{a,min} = 2.5 < 1.5 \times 4.5$.	–	–
$\therefore \Psi_{ed,N} = 0.7 + 0.3 \times \frac{2.5}{1.5 \times 9} = 0.76$	–	–
$\Psi_{c,N}$ = 1.0 uncracked concrete assumed ($k_{c,uncr} = 24$)	D.5.2.6	Table 8
Determine c_{ac}: $h_{ef} + 5\,(c_{a,min})^{0.75} = 9 + 5\,(2.5)^{0.75} = 18.9$ in. > 12 in. therefore, $c_{ac} = 2.5\,h_{ef}$ $c_{ac} = 2.5$ (9 in.) = 22.5 in.	D.5.12.7	Section 4.1.3
For $c_{a,min} < c_{ac}$ $\Psi_{cp,N} = \frac{\max\{c_{a,min};\,1.5\,h_{ef}\}}{c_{ac}} = \frac{\max\{2.5;\,1.5 \times 9\}}{22.5} = 0.60$	D.5.2.7 & Eq. (D-13)	–
$N_b = k_{c,uncr}\sqrt{f'_c} \times h_{ef}^{1.5} = 2.4\sqrt{4000} \times (9)^{1.5} = 40{,}983$ lb	D.5.2.2 & Eq. (D-7)	–
$N_{cbg} = \frac{496}{729} \times 1.0 \times 0.76 \times 1.0 \times 0.60 \times 40{,}983 = 12715$ lb	–	–
$\Phi N_{cbg} = 0.65 \times 12{,}715 = 8{,}265$ lb = 8.3*k*	D.4.4c	–

4.2.6 HIT-RE 500-SD Epoxy Adhesive Anchoring System

Calculation per ACI 318-05 Appendix D and this report.		ACI 318 Code Ref.
Step 4. Determine bond strength: $N_{ag} = \frac{A_{Na}}{A_{NaO}} (\Psi_{ed,Na})(\Psi_{g,Na})(\Psi_{ec,Na})(\Psi_{p,Na})(N_{aO})$		Section 4.2.6 3 Eq. (D-14b)
$S_{cr,Na} = min\left(20 \times d\sqrt{\frac{\tau_{k,uncr}}{1450}}\,;\, 3\,h_{ef}\right) = 20 \times 0.5\sqrt{\frac{2{,}236}{1450}} = 12.4\ in$ $3\,h_{ef} = 27$ in $\geq 12.4 \therefore s_{cr,Na} = 12.4$ in.	–	Section 4.2.6.3 Table 9
$c_{cr,Na} = \frac{s_{cr,Na}}{2} = 6.2$ in.	–	Section 4.2.6.3 Eq. (D-14i)
$A_{Na} = (2c_{cr,Na} + s)(c_{cr,Na} + c_{a,min}) = 143.0\ in^2$	–	Section 4.2.6.3 Eq. (D-14i)
$A_{NaO} = (s_{cr,Na})^2 = 154.2\ in^2$	–	Section 4.2.6 3 D.5.3.7
For $c_{a,min} < c_{cr,Na}$: $\Psi_{ed,Na} = \left(0.7 + 0.3\,\frac{c_{a,min}}{c_{cr,Na}}\right)$		Section 4.2.6.3
$\Psi_{ed,Na} = \left(0.7 + 0.3\,\frac{2.5}{6.2}\right) = 0.82$		Section 4.2.6.3
$\tau_{k,max,uncr} = \frac{k_{k,uncr}}{\pi \times d}\sqrt{h_{ef} \times f'_c} = \frac{24}{\pi \times 0.5}\sqrt{9 \times 4000} = 2{,}899$ psi		Section 4.2.6.3 Table 8
$\psi_{g,NaO} = \sqrt{n} - \left[\left(\sqrt{n} - 1\right)\left(\frac{\tau_{k,uncr}}{\tau_{k,max,uncr}}\right)^{1.5}\right] = \sqrt{2} - \left[\left(\sqrt{2} - 1\right)\left(\frac{2{,}236}{2{,}899}\right)\right]^{1.5} = 1.13$		Section 4.2.6.3 Table 9
$\psi_{g,Na} = \Psi_{g,NaO} + \left[\left(\frac{s}{s_{cr,Na}}\right)^{0.5} \times (1 - \Psi_{g,NaO})\right] = 1.13 + \left[\left(\frac{2.5}{12.4}\right)^{0.5} \times (1\text{-}1.13)\right] = 1.06$		Section 4.2.6.3
$\psi_{ec,Na} = 1.0$ no eccentricity - loading is concentric	–	–
$\Psi_{p,Na} = \frac{\max\lvert c_{a,min}\,;\, c_{cr,Na}\rvert}{c_{ac}} = \frac{\max\lvert 2.5\,;\, 6.2\rvert}{22.5} = 0.28$	–	–
$N_{NaO} = \tau_{k,uncr}\ \pi\ d\ h_{ef} = 2{,}236\ \pi\ 0.5\ 9 = 31{,}610$ lb	–	Section 4.2.6.3 Eq. (D-14j)
$N_{ag} = \frac{A_{Na}}{A_{NaO}} (\psi_{ed,Na})(\psi_{g,Na})(\psi_{ec,N})(\psi_{p,Na})(N_{aO})$ $N_{ag} = \frac{143.0}{154.2}$ (0.82) (1.06) (1.0) (0.28) (31,610) = 7,134 lb.		Section 4.2.6.3 Eq. (D-14b)
$\therefore \phi = 0.65$	–	Table 9
$\phi N_{ag} = 0.65\ (7{,}134) = 4{,}637$ lb $= 4.6$ k		–
Step 5. Determine controlling strength:	D.4.1.2	–

Steel strength	ϕ Nsa	= 26.6 k	
Concrete breakout strength	ϕ Ncbg	= 8.3 k	
Bond strength	ϕ Nag	= 4.6 k	controls

Step 6. Convert strength to ASD using average load factor: $N_{allow,ASD} = \frac{N_d}{\alpha} = \frac{\phi N_n}{\alpha} = \frac{4.6}{1.4} = 3.3\ k$	Section 4.2

WASTE-TECH
a division of KUSTERS ZIMA

5.4

SCREENINGS WASHER PRESS WASHWATER COMPONENT DETAILS

OPERATION & MAINTENANCE

WENATCHEE WWTP IMPROVEMENTS
PROJECT PO913
WENATCHEE, WA

SECTION 11092 – PERFORATED PLATE SCREENS
SECTION 11095 – SCREENINGS WASHER COMPACTOR

WASHER PRESS WASHWATER SOLENOID VALVE DETAILS

Manufacturer:	Magnatrol
Unit/Model no.:	F16K44
Size:	1” NPT
Qty:	2 each per Washer Compactor; (1) for Inlet Hopper & (1) for Compaction Zone
Voltage:	120V
Rating:	Explosion-proof NEMA 4
Construction:	Stainless Steel
Installation Note:	Mount w/solenoid coil in vertical position (see Gen. Arrangement drawings in Section 2 for illustration)

WASHER PRESS WASHWATER BALL VALVE DETAILS

Manufacturer:	Apollo
Model no.:	76-105-01
Qty:	2 each per Washer Compactor; (1) for Inlet Hopper & (1) for Compaction Zone
Size:	1” NPT
Body material:	Stainless Steel
Ball:	Stainless Steel
Seat:	RPTFE

WASHER PRESS WASHWATER STRAINER DETAILS

Manufacturer:	Magnatrol
Unit/Model no.:	ST4SS
Size:	1”
Qty:	2 each Washer Compactor
Screen material:	Stainless Steel
Body construction:	Stainless Steel

Wash Water Requirement: 25 gpm @ 40 psi

Magnatrol
VALVE CORP.

Available For Quick Delivery

Bronze and Stainless Steel 2-Way

SOLENOID VALVES

For Control Of
WATER • OIL • STEAM
AIR • GAS • CRYOGENICS
SOLVENTS • OXYGEN
CORROSIVE FLUIDS

Catalog 3006

Magnatrol VALVE CORP.

STAINLESS STEEL SOLENOID VALVES

Dependable • Packless

TYPE "K" FULL PORT - NORMALLY CLOSED
1/2" TO 3" PIPE SIZE

NO DIFFERENTIAL PRESSURE REQUIRED TO OPEN

MAX. FLUID TEMP.
400° F
MAX. STATIC PRESSURE
300 PSI
Except valves listed for 500 PSI

OPERATION:
Valve opens when energized and closes when de-energized. When the coil is energized the pilot valve opens, relieving the pressure above the piston, which is then lifted from its seat by the plunger. Upon de-energizing the coil, a spring closes the pilot valve and opens a bleed passageway to permit pressure to build above the piston and seat it.

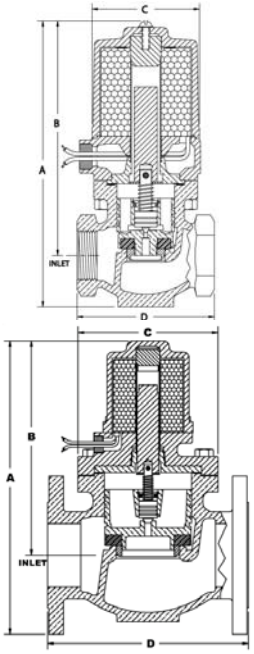

CONSTRUCTION:
(*Wetted parts - No Copper Bearing Alloys in contact with fluid)
*Valve Body - 304 Stainless Steel Globe Pattern - NPT ends
(For Flanged Ends see Options page 24)
*Piston - 303 Stainless Steel
Coil Enclosure - Malleable or Cast Iron, 1/2" NPS conduit conn.
*Plunger - 430 Stainless Steel
*Pilot Valve - 303 Stainless Steel
*Bonnet Tube - 304 Stainless Steel
*Spring - Inconel
*Body Seal - Non Asbestos Gasket
*Orifice Seal - Glass Filled Teflon
*AC Shading Coil - Silver
*Stem Pin - Inconel
Coil - Encapsulated Class H, 18" leads

FOR STEAM APPLICATIONS SEE BULLETIN 3006-W Page 22

APPLICATION:
To control the flow of Corrosive Fluids, Deionized Water, Condensate, Ammonias, Vegetable Oils, Fuel Oils, Cryogenics, Flammable Liquids.** Cryogenic fluids include liquid oxygen (-297°F), liquid argon (-303°F) and liquid nitrogen (-320°F). Valve operates from zero to maximum differential pressure indicated in table. Valve must be mounted in horizontal pipe with solenoid enclosure vertical and on top.

FOR OPTIONS & ACCESSORIES SEE PAGES 24 & 25

Pipe Size Inches	Max. Diff. PSI	Type No.	Watts AC	Amps Hold 120-60	Amps Inrush 120-60	Watts DC	Ship Wt. Lbs.	Dimensions In Inches A	B	C	D NPT	D (Flanged) 150#	D (Flanged) 300#
1/2	110	14K42	25	0.4	1.2	18	7	7	5-7/8	2-7/8	2-7/8	6	6-1/2
	200	14K32											
	300	29K52	45	0.8	2.4	23	10	8	6-7/8	3-1/2	3-1/2		
	500	E29K62					15			4	4		
3/4	110	14K43	25	0.4	1.3	18	8	7-1/8	6	2-7/8	2-7/8	6	6-1/2
	200	29K33	45	0.8	2.6	23	11	8-1/8	7	3-1/2	3-1/2		
	300	129K53	65	1.2	3.9	33							
	500	E129K63					16			4	4		
1	110	16K44	25	0.4	1.5	18	10	8	6-5/8	3-1/4	3-1/4	6-1/2	7-1/2
	200	31K34	45	0.8	2.8	23	13	8-7/8	7-1/2	3-1/2	3-1/2		
	300	131K54	65	1.2	4.2	33							
	500	E131K64					18			4	4		
1-1/2	115	35K46	45	0.8	3.2	23	17	10	8-1/8	4	4	6-1/2	7-1/2
	200	41K36	60	1.2	6.7	35	21	11	9-1/8	4-1/2	4-1/2		
	300	141K56	85	2.0	10.0	45							
	500	141K66											
2	100	36K47	45	0.8	3.5	23	27	11	8-3/4	5-3/8	5-3/8	8	9
	200	42K37	60	1.2	7.4	35	32	12	9-3/4				
	300	42K57											
	500	142K67	85	2.0	11.0	45							
3	50	44K29F1	60	1.2	8.8	35	68	13-3/4	10-1/2	6-5/8	N/A	9-1/2	N/A
	100	44K49F1											
	200	44K39F1											
	300	144K59F3	85	2.0	13.0	45	81					N/A	12-1/2

Shipping Weights above apply to Threaded Ends Only (except 3" which are Flanged Only)
For Flanged Ends contact factory for complete weight and dimensions
3" STAINLESS STEEL VALVES ARE SUPPLIED WITH FLANGED ENDS ONLY

**** CLEANING**
- Cryogenic valves are degreased & cleaned to keep them free of moisture.
- Oxygen valves are also "black light" tested.

Strainers are recommended for use with solenoid valves
(See page 19)

When you order please supply the following:
- Pipe Size
- Valve Type
- Voltage (AC or DC)
- Hertz
- Fluid
- Fluid Temperature
- Max. Diff. Pressure
- Optional Features

(See pages 24 & 25)

MAGNATROL VALVE CORPORATION
Magnatrol Valve Corporation • P.O. Box 17 • 67 Fifth Avenue • Hawthorne • New Jersey • 07507
info@magnatrol.com • Phone: 973-427-4341 • Fax: 973-427-7611 • www.magnatrol.com

OPTIONAL FEATURES

For Dependable • Packless Solenoid Valves

See Individual Options For Availability For Use With Specific Valve Types

BOTTOM MOUNTED OPTIONS Note: Only One Bottom Mount Option Can Be Installed On Each Valve

MANUAL OVERRIDE

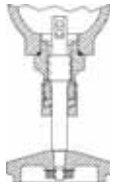

(Normally Closed valves only)
(Designated by Prefix "MO")
Enables manual opening of solenoid valve during power failure or to override automatic controls.

LEVER

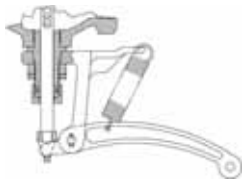

(Normally Closed valves only)
(Designated by Prefix "LV")
Enables rapid opening of solenoid valve. Can be chain operated for use at inaccessible locations.

DASHPOT

(Designated by Prefix "DP")
Furnished for clean liquids to reduce water hammer effect sometimes encountered in long pipe runs by slowing valve closing.

FLOW CONTROL

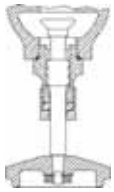

(Normally Closed, NR & MR valves, only)
(Designated by Prefix "FC")
Provides a manual method of reducing or throttling the flow.

MOUNTING STUD

(Designated by Prefix "MS")
3/8"-16 thread can be furnished in bottom of body to facilitate mounting on bracket. (Not available on 2", 2-1/2" and 3")

DRAIN

(Normally Closed, NR & MR valves, only)
(Designated by Prefix "DR") - 1/4" NPT plug supplied in bottom of valve to facilitate draining of liquid from valve body.

OTHER OPTIONS

PILOT TAP

(Designated by Prefix "PT")
Type D, G & GR Valves can be furnished with 1/8" tapped hole for pilot connection or pressure gauge.

DIN CONNECTOR

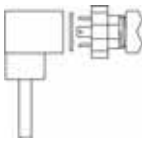

(Designated by Suffix "DN")
Provides 3 prong connector for easy power connect / disconnect.

"HUM FREE": (No AC Hum/Buzz)
(Designated by Suffix "HF") - The "HUM FREE" option eliminates the "AC hum" associated with AC operated solenoid valves. Enables valves to be used where an AC hum would not be acceptable and AC is the only power source available. IE: Hospitals, labs, schools (class rooms), homes, office environments etc. & when 24 vac is required for 40 series valves.

Leak / Dead Tight:
(Normally Closed valves only)
(designated by Prefix "LT") - The Leak / Dead Tight Option is used to satisfy a Class VI tight shutoff requirement. This option offers 'soft' resilient seating or 'gapless' seal. Consult Factory for Max. Diff. Pressure and Valve Type availability.

Flanged Ends for SS Valves:
(Designated by Suffix "F1" for 150 lb or "F3" for 300 lb Flanges) Available on stainless steel valves. (Flanged ends for bronze valves available through our Clark-Cooper Division, see bottom of page 3).

Explosion-Proof and Watertight Solenoids:
(Designated by Prefix "F") – are Explosion-proof and NEMA 4, 7C & D, 9E, F & G suitable for use in hazardous locations requiring Class I, Groups C & D & Class II Groups E, F, and G equipment.

NEMA 4X:
(Designated by Prefix "F" AND Suffix "ZP") – are suitable for use in locations requiring a NEMA 4X designation. "ZP" (Zinc Plating) replaces the standard paint used on the Coil housing (cup and base). The additional corrosion protection satisfies NEMA 4X requirements.
Internal construction, pressure ratings, power consumption, and external dimensions are the same as for standard valves.

Nickel Plating:
(Designated by Suffix "NP") - Plating is 0.0005" Thick Meets Mil Spec. C26074

Universal Mount Valves For Mounting In Vertical Pipe Runs
(See Magnatrol Universal Mount Catalog 3006-UM)

MAGNATROL VALVE CORPORATION
Magnatrol Valve Corporation • P.O. Box 17 • 67 Fifth Avenue • Hawthorne • New Jersey • 07507
info@magnatrol.com • Phone: 973-427-4341 • Fax: 973-427-7611 • www.magnatrol.com

ORDERING GUIDELINES

Magnatrol Solenoid Valves

If you have any questions or wish to request a quote:

Phone: 973-427-4341 • Fax: 973-427-7611

E-Mail: info@magnatrol.com

For Help In Choosing The Correct Valve For Your Application:

REFER TO THE VALVE SELECTION CHART ON PAGE 3

MAGNATROL VALVE TYPE NUMBERS PREFIX AND SUFFIX BREAKDOWN

For Additional Information On Options
See Optional Features Pages 24 & 25

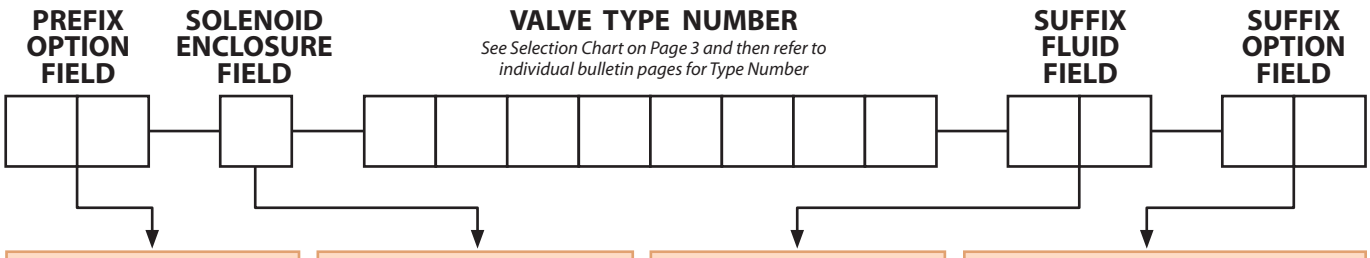

Prefix Letters for Options:
Choose One

DP .....Dashpot (Consult factory for valve type availability)
DR .....Drain Plug **
FC .....Flow Control **
LV .....Lever *
MO .....Manual Override
MS .....Mounting Stud
PD .....Position Display *
PS .....Position Switch *
PT .....Pilot Tap ***

* Normally Closed Only
** Normally Closed and NR & MR Valves
*** Pilot Tap: Can be used along with any other option. Available for Type D, G and GR only.

Prefix Letters for Solenoid Enclosures:

(Blank) = NEMA12
F = Explosion Proof & NEMA 4
F with ZP Suffix = NEMA 4X

Suffix Letters for Fluids: †

A .....Air
B.....Brine
C.....Gritty Coolant
G .....Gas
H .....Hot Water
J.....Jet Fuel or Kerosene
K.....Gasoline or Naphtha
L .....Alcohol
O .....Oil
P.....Soluble Oil or Coolant
R.....Freon/Refrigerant
V .....Sandy Well Water
W ....Cold Water
Y.....Gaseous Oxygen
YZ...Liquid Oxygen
Z.....Cryogenics

† If your fluid is not listed leave blank & advise Magnatrol of fluid

Suffix Letters for Options:

DN....Din Connector
E.....Extra Fast Closing
HF.....Hum Free
HT.....High Temperature Coil
LT.....Leak/Dead Tight (Soft Seat Pilot)
NP ....Nickel Plated (.005 Thickness) Meets Mil Spec C26074
X.....Sealant
ZP.....Zink Plated Cup & Base

For Stainless Valves: ††

F1 .....150# Flanged Ends
F3 .....300# Flanged Ends

†† For flanged bronze valves contact our Clark-Cooper Div. See bottom of page 3.

VALVE DISC AND GASKET CHANGES:

Valve Disc and Gasket are sometimes changed/substituted for better performance with a given fluid. The change is represented by the insertion of a letter after the Valve Type letter(s). The inserted letter represents the substituted Disc/Gasket material.
See examples below:

Examples:

V - Viton Disc (i.e. Type 18A44 with Viton Seals becomes 18AV44)

T - Teflon Disc (i.e. Type 18A44 with Teflon Seals becomes 18AT44)

B - Buna-N Disc (i.e. Type 16L44 with Buna-N Seals becomes 16LB44)

NOTE: Refer to individual bulletins for Valve Type's standard Disc and Gasket materials.

NOTE

Magnatrol Valve Type Numbers DO NOT include Voltage information.

VOLTAGE (AC Volts and Hz or DC Volts) MUST BE SPECIFIED when requesting a quote or placing and order.

VALVE CONSTRUCTION FEATURES

Valve Construction Features:

- **2-way straight thru globe design**
- **Bronze or Stainless Steel body w/ female NPT threads standard**
- **Stainless Steel available with 150# and 300# flanged ends**
- **Full port-internal pilot operated or direct acting**
- **Packless construction**
- **Continous duty coils for all voltages**
- **No differential pressure required to open.**

HOUSING

- Construction: Malleable or Cast Iron
- Designed for rugged industrial use
- Self contained terminal box with 1/2" NPS conduit connection
- Available: NEMA 12, 4, 4X and Explosion Proof

COIL

- Available Class "B" or "H" insulation
- Designed for continuous duty service
- Available in most AC or DC voltages

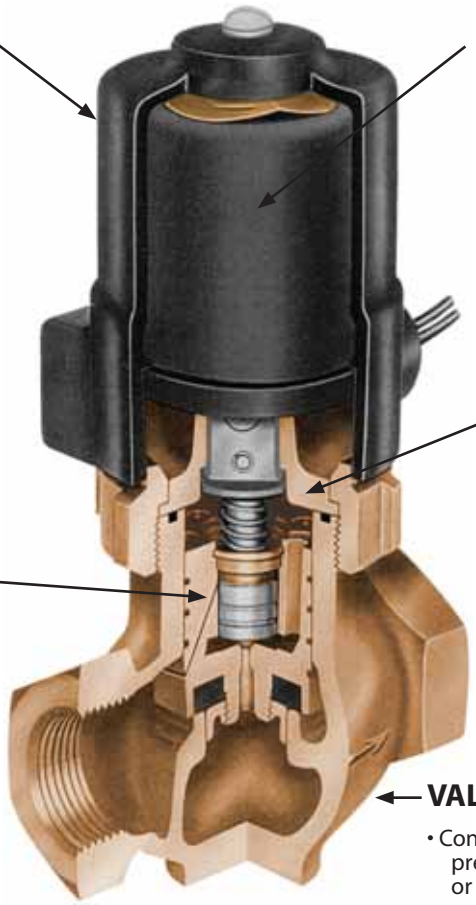

BONNET

- A flanged metallic tube encloses the plunger and hermetically seals the top of the valve

PISTON ASSEMBLY

- A sturdily constucted stem assembly consisting of a plunger and stainless steel pilot flexibly connected to the piston
- Discs are available in various materials dictated by operating conditions

VALVE BODY

- Constructed of high pressure cast bronze or stainless steel in a globe pattern with screwed ends*
- Available in a full range of sizes

Normally Closed Valve shown is typical of Type A, 1/2" thru 1-1/4"

* Stainless Steel valves available with flanged ends. Flanged Bronze valves available through Magnatrol's **Clark-Cooper Division** (See bottom of page 3).

Easy In-Line Service

Inspect, clean or service all internal parts of full port-internal pilot operated or direct acting solenoid valves while the valve body remains in the pipeline shortening costly down time and increasing productivity.

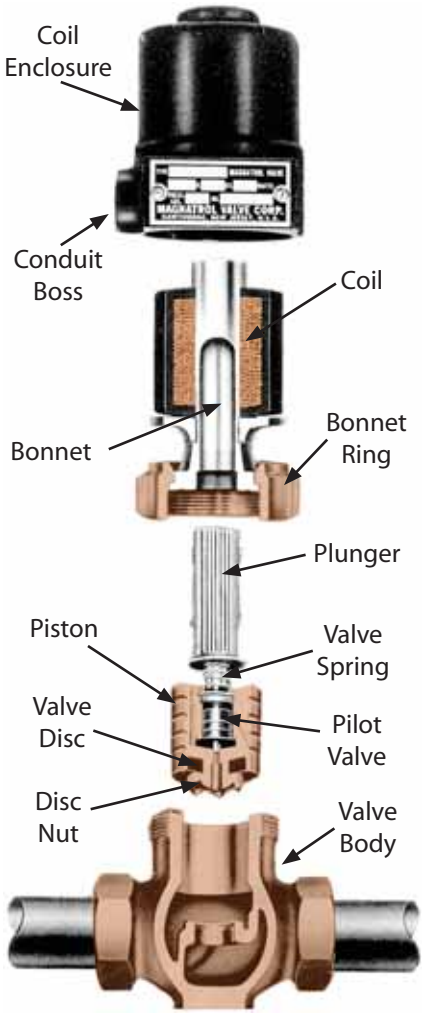

MAGNATROL SOLENOID OPERATED VALVES are used to control the flow of liquids or gases, generally in conjunction with automatic control apparatus such as thermostat, float switch, time switch, or flow meter.

SOLENOID COILS
CONTINUOUS DUTY COILS

ELECTRICAL CHARACTERISTICS
Coils are stocked for the following voltages:

Voltage	6	12	24	32	48	64	120	208	240	480	575
50, 60 Hertz AC			•				•	•	•	•	•
DC	•	•	•	•	•	•	*		*		

* Furnished with surge protecting capacitor

ENCAPSULATED COIL

Reference should be made to the Bulletins to determine the availability of a required valve for a specific power supply.

Consult the factory for information regarding voltage and frequencies not listed.

Valves for A.C. sevice can be converted for use on other A.C. voltages simply by changing the coil. Similarly D.C. valves can be converted for other D.C. voltages. Consult factory regarding conversion from A.C. to D.C. or D.C. to A.C.

CURRENT CONSUMPTION:
Current values shown in the bulletins are for 120 volts, 60 hertz. For other voltages the current is inversely proportional: For instance, if a given valve draws 0.5 amperes on 120 volts it would draw 0.25 amperes on 240 volts, or 0.125 amperes on 480 volts. Where power consumption is shown in D.C. watts, the values given should be divided by line voltage to obtain the current in amperes. Power consumption for all valves is shown in the individual bulletins.

CONSTRUCTION:
Coils can be continuously energized without overheating or failure. Coils supplied with 18" long, 18 gage wire leads standard**, encapsulated for temperature of intended service, providing a coil with excellent resistance to shock, moisture, oil and chemicals.

General Service: Class "B" coils supplied for gas and liquids up to 212° F and where ambient temperatures do not exceed 40° C (104° F). The Class "H" coil should be specified for higher ambient temperatures.

High Temperature Service: Class "H" coils supplied for gases and liquids from 212° - 400° F and where ambient temperatures do not exceed 100° C (212° F).

**Longer continuous leads available

INSTALLATION:
The coil is a two wire device which may be controlled by either a single or double pole switch. The switch should always be installed in the hot leg of 120 volt circuits. Where both legs are hot, such as 240 or 480 volt circuits, a double pole switch is preferable, however, if a single pole switch is used, then the wiring should have top quality insulation since even minute leakage currents may give rise to sticking problems. On motor hookup with step control starter, full voltage should be supplied to coil immediately.

Note: Coil can be readily changed while valve is still under pressure.

MAGNATROL VALVE CORPORATION
Magnatrol Valve Corporation • P.O. Box 17 • 67 Fifth Avenue • Hawthorne • New Jersey • 07507
info@magnatrol.com • Phone: 973-427-4341 • Fax: 973-427-7611 • www.magnatrol.com

76-100 Series

Stainless Steel Ball Valve

Threaded, 1/4" to 1" 2000 psig WOG, 1-1/4" to 2" 1500 psig WOG, 2-1/2" to 3" 1000 psig WOG. (See referenced P/T chart)
Cold Non-Shock. 150 psig Saturated Steam, Vacuum Service to 29 inches Hg.
Federal Specification: WW-V-35C, Type: II, Composition: SS, Style: 3.
MSS SP-110; Ball Valves Threaded, Socket-Welding, Solder Joint, Grooved and Flared Ends.

FEATURES

- Investment cast components
- RPTFE seats and stuffing box ring
- Mounting pad for easy actuator mounting
- Blow-out-proof stem design
- Adjustable packing gland
- Meets NACE MR-01-75
- SS lever and nut
- (-24) 1/4" to 2" Certified to API 607, 4th Edition, Class 600 burn

STANDARD MATERIAL LIST

1. Lever and grip	304 SS w/vinyl
2. Stem packing	RPTFE
3. Stem bearing	RPTFE
4. Ball	A276-316
5. Seat (2)	RPTFE
6. Retainer	A276-316 (1/4" to 1") A351-CF8M (1-1/4" to 3")
7. Gland nut	A276-316
8. Stem	A276-316
9. Lever nut	18-8 SS
10. Body seal (1-1/4" to 3")	PTFE
11. Body	A351-CF8M

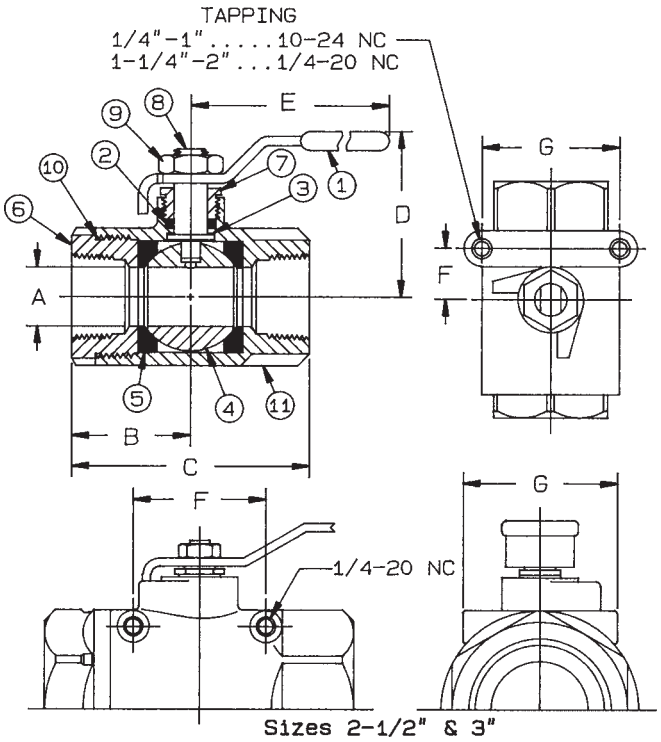

STAINLESS STEEL BALL VALVE

NUMBER	SIZE	A	B	C	D	E	F	G	Wt.
76-101-01	1/4"	.37	1.03	2.06	1.75	3.87	.50	1.12	.58
76-102-01	3/8"	.37	1.03	2.06	1.75	3.87	.50	1.12	.54
76-103-01	1/2"	.50	1.12	2.25	1.81	3.87	.50	1.12	.63
76-104-01	3/4"	.68	1.50	3.00	2.12	4.87	.87	1.37	1.27
76-105-01	1"	.87	1.68	3.37	2.25	4.87	.87	1.37	1.63
76-106-01	1-1/4"	1.00	2.00	4.00	2.62	5.50	.93	1.50	3.06
76-107-01	1-1/2"	1.25	2.18	4.37	3.05	8.00	.93	1.50	4.04
76-108-01	2"	1.50	2.75	5.50	3.24	8.00	.93	1.50	6.05
76-109-01	2-1/2"	2.50	3.37	6.75	4.12	8.00	2.75	3.37	15.57
76-100-01	3"	2.50	3.37	6.75	4.12	8.00	2.75	3.37	16.79

OPTIONS AVAILABLE:

(SUFFIX)	OPTION	SIZES
-02-	Stem Grounded	1/4" to 3"
-03-	1-1/4" CS Stem Extension	1/4" to 3"
-04-	2-1/4" CS Stem Extension	1/4" to 3"
-07-	Steel Tee Handle	1/4" to 2"
-08-	90° Reversed Stem	1/4" to 3"
-14-	Side Vented Ball (Uni-Directional)	1/4" to 2"
-15-	Wheel Handle, Steel	1/4" to 2"
-16-	Chain Lever - Vertical	3/4" to 2"
-19-	Lock Plate	1/4" to 2"
-21-	UHMWPE Trim (Non-PTFE)	1/4" to 3"
-24-	Graphite Packing	1/4" to 3"
-27-	SS Latch-Lock Lever & Nut	1/4" to 3"
-30-	Cam-Lock and Grounded	1/4" to 2"
-32-	SS Tee Handle & Nut	1/4" to 2"
-35-	VTFE Trim	1/4" to 3"
-39-	SS Hi-Rise Locking Wheel Handle, SS Nut	1/4" to 2"
-40-	Cyl-Loc and Grounded	1/4" to 2"
-44-	Seal Welded	1/4" to 2"
-45-	Less Lever & Nut	1/4" to 3"
-46-	Latch Lock Lever - Lock in Closed Position Only	1/4" to 3"
-47-	SS Latch Lock Oval Handle	1/4" to 1"
-48-	SS Oval Handle (No Latch) & Nut	1/4" to 2"
-49-	Assembled Dry	1/4" to 3"
-50-	2-1/4" CS Locking Stem Extension	1/4" to 3"
-57-	Oxygen Cleaned	1/4" to 3"
-58-	Chain Lever - Horizontal	3/4" to 2"
-60-	Static Grounded Ball & Stem	1/4" to 3"
-64-	250# Steam Trim	1/4" to 3"
-P01-	BSPP (Parallel) Thread Connection	1/4" to 3"
-T01-	BSPT (Tapered) Thread Connection	1/4" to 3"

For Pressure/Temperature Ratings,
Refer to Page M-12, Graph No. 14
(1/4" to 1")
Refer to Page M-11, Graph No. 12
(1-1/4" to 2")
Refer to Page M-10, Graph No. 8
(2-1/2" to 3")

COPYRIGHT ©2006 CONBRACO IND., INC. – PRINTED IN U.S.A.

STRAINERS
Bronze • Stainless Steel

APPLICATION:

The presence of foreign particles in an automatic valve may seriously affect its dependability. The installation of a strainer close to the inlet side of the valve is the best means of preventing the entrance of pipe chips, scale, rust, pipe dope, welding slag or sediment into the valve, provided the screen is periodically removed for cleaning.

CONSTRUCTION:

Strainer bodies have screwed ends. Screens are stainless steel with opening sizes as listed in tables below. Other sizes can be furnished upon request. Liberal straining area provides for fluid passage at minimum pressure drop. Screens are easily removed for cleaning. Strainers are furnished with NPT blowoff connections unplugged. See charts below for blow-off sizes (C Dim.)

CLEANING FOR CRYOGENIC & OXYGEN SERVICE:

- Strainers for Cryogenic applications are degreased and cleaned to keep them free of moisture.
- Strainers for Oxygen service are degreased and cleaned then "black light" tested.

BRONZE 1/4" TO 3" PIPE SIZE

Pipe Size Inches	Screen Size	Type No.	Ship Wt. Lbs.	Dimensions In Inches		
				A	B	C
1/4	60 Mesh 0.009 Openings	ST 0	3/4	2-3/4	2-1/4	1/4
3/8		ST 1	3/4	2-3/4	2-1/4	1/4
1/2		ST 2	3/4	2-3/4	2-1/4	1/4
3/4		ST 3	1-1/2	3	2-9/16	3/8
1		ST 4	2-1/4	3-3/4	2-3/4	3/8
1-1/4	0.16 Diameter Perforations Lined With 30 Mesh	ST 5	3-1/4	4-7/16	3-5/8	3/4
1-1/2		ST 6	4-1/2	4-15/16	3-7/8	3/4
2		ST 7	7	6-1/8	5-1/16	1
2-1/2		ST 8	12-1/2	8-1/4	6	1-1/4
3		ST 9	18	9	6-3/4	1-1/2

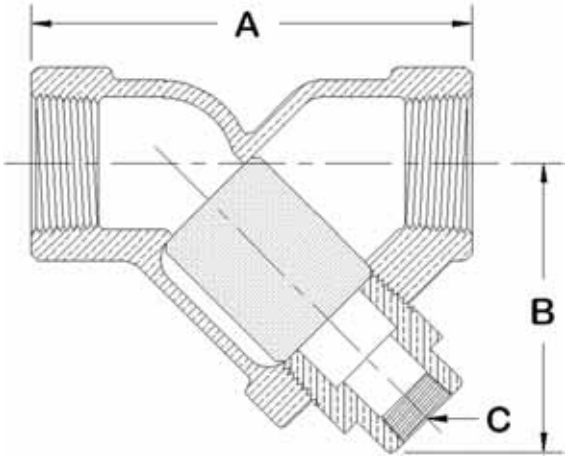

STAINLESS STEEL 1/2" TO 2" PIPE SIZE

Pipe Size Inches	Screen Size	Type No.	Ship Wt. Lbs.	Dimensions In Inches		
				A	B	C
1/2	60 Mesh 0.009 Openings	ST 2SS	1-1/2	3	2-3/8	1/4
3/4		ST 3SS	2-1/4	3-3/4	2-13/16	3/8
1		ST 4SS	3-1/4	4-5/8	3-1/8	3/8
1-1/2	0.16 Diameter Perforations Lined w/30 Mesh	ST 6SS	6-3/4	5-5/8	4-3/4	3/4
2		ST 7SS	11-1/2	7	6	1

PRESSURE TEMPERATURE RATINGS

MATERIAL	STEAM	LIQUIDS
BRONZE	300 PSI @ 400°F	600 PSI @ 100°F
STAINLESS STEEL	845 PSI @ 750°F	1,440 PSI @ 100°F

WENATCHEE WWTP IMPROVEMENTS
PROJECT PO913
WENATCHEE, WA

SECTION 11092 – PERFORATED PLATE SCREENS
SECTION 11095 – SCREENINGS WASHER COMPACTOR

ROTAMETER DETAILS

Unit/Model no.:	McMaster-Carr 4230K43
Type:	Versa-Mount High-Pressure Flowmeter
Size:	1” NPT
Range:	2-20 gpm
Fittings:	Stainless Steel, 1” female NPTF

For information about flowmeters, see page 551. For information about pipe size, see pages 2-3.

Vertical-Mount Shatterproof High-Pressure Water Flowmeters

A Type 304 stainless steel body and Type 316 stainless steel fittings give these flowmeters great impact resistance to prevent shattering and spilling. For use with water. Scale is graduated in gallons per minute. Window is acrylic. Mount vertically; flow moves from bottom to top. O-rings are fluoroelastomer. Accuracy is ±3%. Maximum pressure is 1,500 psi at 70°F. Temperature range is 33° to 350°F. Connections are NPT female.

Flow Range, gpm	Pipe Size	O'all Ht.		
0.2-2	1/2"	11"	1791K72	$633.76
0.4-4	1/2"	11"	1791K73	633.76
0.6-6	1/2"	11"	1791K74	633.76
1-10	1"	13 1/4"	1791K75	792.23
1.6-16.5	1"	13 1/4"	1791K76	792.23
2.5-25	1"	13 1/4"	1791K77	792.23

Versa-Mount Transparent-Body Flowmeters

Quickly spot problems from a distance—these flowmeters have a transparent body so you can monitor flow in addition to reading the scale. All have a shock-resistant spring-loaded piston so they can be mounted horizontally, vertically, or at any angle. The dual scale shows flow rate in both gallons per minute and liters per minute. Body is polysulfone, except for 4161A61-A66 and 4161A41-A46, which have a polycarbonate body. O-rings are Buna-N. Accuracy is ±5%. Maximum pressure is 325 psi at 70°F.

Easy-to-install flowmeters have union fittings.

Flowmeters ***for water*** have a minimum temperature of 33°F.

Flowmeters ***for hydraulic oil*** are not rated for minimum temperature.

Flow Range, gpm/lpm	Pipe Size	Max. Temp.	Scale Lg.	O'all Lg.		
For Water						
Polysulfone Fittings—NPTF (Dryseal) Male						
0.5-4 / 2-15	1"	250°F	2 1/2"	5 1/4"	4197K11	$65.35
1-7 / 4-26	1"	250°F	2 1/2"	5 1/4"	4197K12	65.35
1-10 / 4-35	1"	250°F	2 1/2"	5 1/4"	4197K13	65.35
1-16 / 5-60	1"	250°F	2 1/2"	5 1/4"	4197K14	65.35
3-18 / 15-65	1"	250°F	2 1/2"	5 1/4"	4197K15	65.35
4-28 / 20-100	1"	250°F	2 1/2"	5 1/4"	4197K16	65.35
Brass Fittings—NPTF (Dryseal) Female						
0.5-4 / 2-15	1/2"	250°F	2 1/2"	7 3/4"	4197K21	110.42
1-7 / 4-26	1/2"	250°F	2 1/2"	7 3/4"	4197K22	110.42
1-10 / 4-35	1/2"	250°F	2 1/2"	7 3/4"	4197K23	110.42
1-16 / 5-60	1/2"	250°F	2 1/2"	7 3/4"	4197K24	110.42
Brass Fittings—NPTF (Dryseal) Male						
0.5-4 / 2-15	3/4"	250°F	2 1/2"	8 1/4"	4197K31	114.93
1-10 / 4-35	3/4"	250°F	2 1/2"	8 1/4"	4197K23	114.93
1-16 / 5-60	3/4"	250°F	2 1/2"	8 1/4"	4197K25	114.93
4-28 / 20-100	3/4"	250°F	2 1/2"	8 1/4"	4197K27	114.93
Easy-to-Install for Water						
Polysulfone Fittings—NPTF (Dryseal) Female						
0.5-5 / 2-20	1/2"	200°F	1 3/4"	7 3/16"	4161A61	103.17
1-10 / 4-40	3/4"	200°F	1 5/8"	7 9/16"	4161A63	120.73
1-15 / 5-55	3/4"	200°F	1 3/4"	7 9/16"	4161A64	120.73
3-30 / 12-108	1"	200°F	1 5/8"	7 9/16"	4161A66	120.73
Brass Fittings—NPTF (Dryseal) Female						
0.5-5 / 2-20	1/2"	200°F	1 3/4"	7 3/16"	4161A41	150.37
1-10 / 4-40	1/2"	200°F	1 5/8"	7 3/16"	4161A42	150.37
1-10 / 4-40	3/4"	200°F	1 5/8"	7 9/16"	4161A43	167.93
1-15 / 5-55	3/4"	200°F	1 3/4"	7 9/16"	4161A44	167.93
1-15 / 5-55	1"	200°F	1 3/4"	7 9/16"	4161A45	167.93
3-30 / 12-108	1"	200°F	1 5/8"	7 9/16"	4161A46	167.93
Easy-to-Install for Hydraulic Oil						
Polysulfone Fittings—NPTF (Dryseal) Female						
0.5-5 / 3-20	1/2"	250°F	1 15/16"	7 3/16"	4161A71	107.56
1-10 / 4-40	1/2"	250°F	1 13/16"	7 3/16"	4161A72	107.56
1-10 / 4-40	3/4"	250°F	1 13/16"	7 9/16"	4161A73	125.12
1-15 / 5-55	3/4"	250°F	1 15/16"	7 9/16"	4161A74	125.12
1-15 / 5-55	1"	250°F	1 15/16"	7 9/16"	4161A75	125.12
3-30 / 15-110	1"	250°F	2"	7 9/16"	4161A76	125.12
Brass Fittings—NPTF (Dryseal) Female						
0.5-5 / 3-20	1/2"	250°F	1 15/16"	7 3/16"	4161A51	154.76
1-10 / 4-40	1/2"	250°F	1 13/16"	7 3/16"	4161A52	154.76
1-10 / 4-40	3/4"	250°F	1 13/16"	7 9/16"	4161A53	172.32
1-15 / 5-55	3/4"	250°F	1 15/16"	7 9/16"	4161A54	172.32
1-15 / 5-55	1"	250°F	1 15/16"	7 9/16"	4161A55	172.32
3-30 / 15-110	1"	250°F	2"	7 9/16"	4161A56	172.32

Versa-Mount Shock-Resistant Air Flowmeters

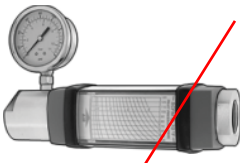

With Pressure Gauge

These air flowmeters have a shock-resistant spring-loaded piston so they can operate in any position—horizontal, vertical, or at an angle. The scale rotates 360° for easy viewing and is protected by a polycarbonate shield. Scale shows flow rate in standard cubic feet per minute. All flowmeters have an anodized aluminum body and fluoroelastomer O-rings. Accuracy is ±2%, except 1/4" pipe size flowmeters, which are not rated. Temperature range is –20° to +240°F. Connections are NPTF (Dryseal) female.

Scale shows flow rate relative to pressure. If pressure is unknown or fluctuates, use flowmeters ***with pressure gauge***, which have a glycerin-filled pressure gauge that measures pressure from 0 to 160 psi.

Flow Range, scfm	Max. psi @ 70°F	Pipe Size	Scale Lg.	O'all Lg.		
Without Pressure Gauge						
0.5-5	1,000	1/4"	1 1/4"	4 13/16"	4216K12	$173.68
1-10	1,000	1/4"	1 1/4"	4 13/16"	4216K14	173.68
2-20	1,000	1/4"	1 1/4"	4 13/16"	4216K42	173.68
3-25	1,000	1/2"	2 1/8"	6 5/8"	4216K41	222.11
3-30	1,000	1/4"	1 1/4"	4 13/16"	4216K16	173.68
5-50	1,000	1/2"	2 1/8"	6 5/8"	4216K53	222.11
5-50	1,000	3/4"	2 3/4"	7 1/4"	4216K56	318.95
10-100	1,000	1/2"	2 1/8"	6 5/8"	4216K54	222.11
10-100	1,000	3/4"	2 3/4"	7 1/4"	4216K34	318.95
15-150	1,000	1/2"	2 1/8"	6 5/8"	4216K55	222.11
15-150	1,000	3/4"	2 3/4"	7 1/4"	4216K77	318.95
15-150	1,000	1"	2 3/4"	7 1/4"	4216K81	318.95
25-250	1,000	3/4"	2 3/4"	7 1/4"	4216K78	318.95
25-250	1,000	1"	2 3/4"	7 1/4"	4216K82	318.95
40-400	1,000	1 1/2"	5 1/4"	12 1/4"	4216K83	650.00
With Pressure Gauge						
0.5-5	600	1/4"	1 1/4"	6 1/8"	4216K11	328.42
1-10	600	1/4"	1 1/4"	6 1/8"	4216K13	328.42
2-20	600	1/4"	1 1/4"	6 1/8"	4216K22	328.42
3-25	600	1/2"	2 1/8"	8"	4216K43	344.21
3-30	600	1/4"	1 1/4"	6 1/8"	4216K15	328.42
5-50	600	1/2"	2 1/8"	8"	4216K23	344.21
5-50	600	3/4"	2 3/4"	8 15/16"	4216K26	465.26
10-100	600	1/2"	2 1/8"	8"	4216K24	344.21
10-100	600	3/4"	2 3/4"	8 15/16"	4216K33	465.26
15-150	600	1/2"	2 1/8"	8"	4216K25	344.21
15-150	600	3/4"	2 3/4"	8 15/16"	4216K27	465.26
15-150	600	1"	2 3/4"	8 15/16"	4216K91	465.26
25-250	600	3/4"	2 3/4"	8 15/16"	4216K28	465.26
25-250	600	1"	2 3/4"	8 15/16"	4216K92	465.26
40-400	600	1 1/2"	5 1/4"	13 13/16"	4216K93	770.83

Versa-Mount High-Pressure Water Flowmeters

Choose these heavy duty flowmeters for use in high-pressure applications—they're built to withstand water pressures up to 3,500 psi at 70°F. All have a shock-resistant spring-loaded piston so they can operate in any position—horizontal, vertical, or at an angle. Flowmeters have a dual scale that shows flow rate in both gallons per minute and liters per minute. Scale rotates 360° for easy viewing and is protected by a polycarbonate shield. Flowmeters have a brass body, Type 303 stainless steel fittings, and fluoroelastomer O-rings. Accuracy is ±2%, except 1/4" pipe size flowmeters, which are not rated. Temperature range is –20° to +240°F. Connections are NPTF (Dryseal) female.

Flow Range, gpm/lpm	Pipe Size	Scale Lg.	O'all Lg.		
0.02-0.2 / 0.1-0.75	1/4"	1 1/4"	4 13/16"	4230K41	$209.47
0.05-0.5 / 0.2-1.9	1/4"	1 1/4"	4 13/16"	4230K42	209.47
0.1-1 / 0.5-3.75	1/4"	1 1/4"	4 13/16"	4230K24	209.47
0.2-2 / 1-7.5	1/4"	1 1/4"	4 13/16"	4230K25	209.47
0.2-2 / 1-7.5	1/2"	2 1/8"	6 5/8"	4230K31	272.63
0.5-5 / 2-19	1/2"	2 1/8"	6 5/8"	4230K81	272.63
0.5-5 / 2-19	3/4"	2 3/4"	7 1/4"	4230K32	418.95
1-10 / 5-38	3/4"	2 3/4"	7 1/4"	4230K33	418.95
1-15 / 4-56	1/2"	2 1/8"	6 5/8"	4230K93	272.63
2-20 / 10-76	3/4"	2 3/4"	7 1/4"	4230K95	418.95
2-20 / 10-76	1"	2 3/4"	7 1/4"	4230K43	418.95
3-30 / 10-115	3/4"	2 3/4"	7 1/4"	4230K86	418.95
3-30 / 10-115	1"	2 3/4"	7 1/4"	4230K44	418.95
5-50 / 20-190	1"	2 3/4"	7 1/4"	4230K45	418.95
5-50 / 20-190	1 1/4"	5 1/4"	12 1/4"	4230K78	1,005.83
10-100 / 50-380	1 1/4"	5 1/4"	12 1/4"	4230K88	1,005.83
10-100 / 50-380	1 1/2"	5 1/4"	12 1/4"	4230K46	1,005.83
10-150 / 50-560	1 1/4"	5 1/4"	12 1/4"	4230K29	1,005.83
10-150 / 50-560	1 1/2"	5 1/4"	12 1/4"	4230K47	1,005.83

WASTE▪TECH
a division of KUSTERS ZIMA

MOTORIZED 4-INCH DRAIN VALVE

Manufacturer:	Triad
Model no.:	50D- 4-INCH
Qty:	1 per compactor
Type:	Full port
Size:	4”
Electric Actuator:	Radius Electric Act # EW-2100-115VAC EXP
Ball:	316 SS

TRIAD®
process equipment

SERIES 50D

For direct mounting to actuators equipped with ISO 5211 output provisions.
Valve has live loaded PTFE chevron stem seals and optional Viton o-rings.

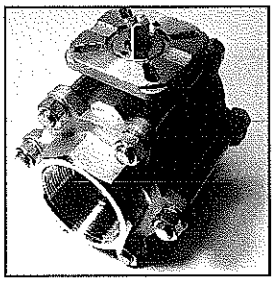

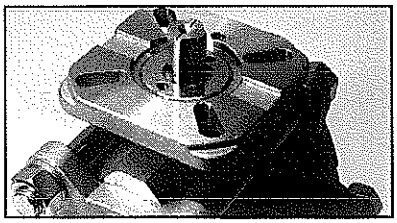

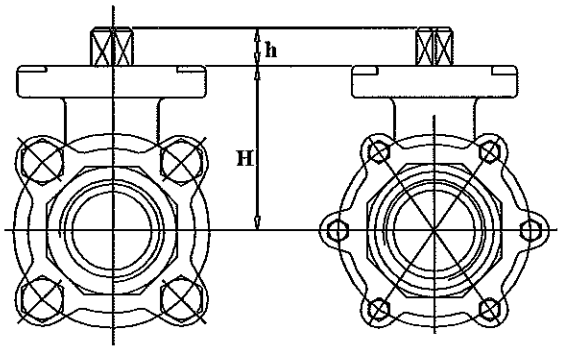

1/4" through 2 1/2" 3" and 4"

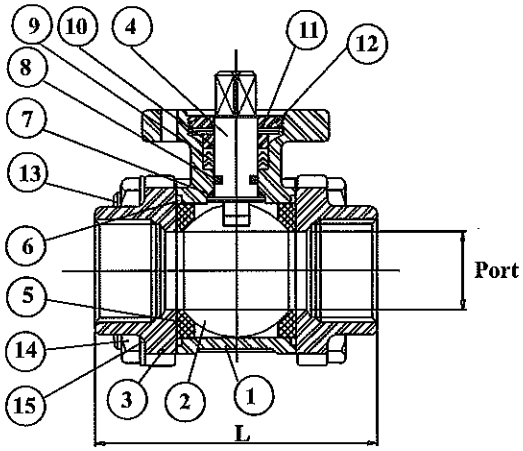

All Triad 50D valves come standard with direct mount actuator capabilities and our patented live loaded high cycle pyramidal stem seal design. The wedging action of the stem is far superior to flat stem designs when it comes to effective wear compensation.

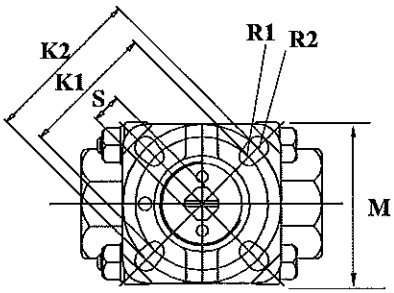

SIZE	port	L	H	h	S	M	øK1	øK2	R1	R2	Torque
1/2"	.50	2.96	1.57	.35	.35	1.65	1.41	1.65	.12	.12	40
3/4"	.75	3.15	1.73	.35	.35	1.65	1.41	1.65	.12	.12	60
1"	1.00	3.55	2.04	.43	.43	1.97	1.65	1.97	.12	.14	70
1-1/4"	1.25	4.33	2.28	.43	.43	1.97	1.65	1.97	.12	.14	110
1-1/2"	1.50	4.75	2.67	.55	.55	2.75	1.97	2.75	.14	.17	170
2"	2.00	5.52	3.00	.55	.55	2.75	1.97	2.75	.14	.17	250
2-1/2"	2.50	7.29	3.86	.70	.67	4.01	2.75	4.01	.17	.21	650
3"	3.00	8.00	4.33	.70	.67	4.01	2.75	4.01	.17	.21	850
4"	4.00	9.50	4.96	.94	.86	4.92	4.01	4.92	.21	.25	950

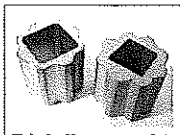

Triad offers a complete line of actuator inserts to adapt the 50D and all other direct mount valves to actuators made to ISO 5211 standards. Please consult the factory for information.

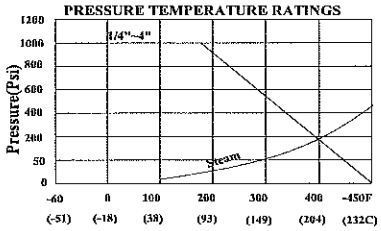

NO.	PART NAME	MATERIAL STAINLESS STEEL
1	BODY	ASTM A351 GR. CF8M
2	CAP	ASTM A351 GR. CF8M
3	BALL	ASTM A351 GR. CF8M
4	STEM	ASTM A276 TYPE 316
5	SEAT	RPTFE
6	GASKET	PTFE
7	PRIMARY SEAL	PTFE
8	O-RING	VITON
9	STEM PACKING	RPTFE
10	GLAND RING	ASTM A276 TYPE 304
11	BEVEL WASHER	ASTM A276 TYPE 301
12	DISC PLATE	ASTM A276 TYPE 304
13	BOLTS	ASTM A276 TYPE 304
14	BOLT NUTS	ASTM A276 TYPE 304
15	BOLT WASHERS	ASTM A276 TYPE 304

SPECIFICATIONS
* Working pressure: 1000psi WOG
* Temperature Range: -60 to 450F
* End Type: Threaded,Socket,& Butt Weld

series **EW**

radius

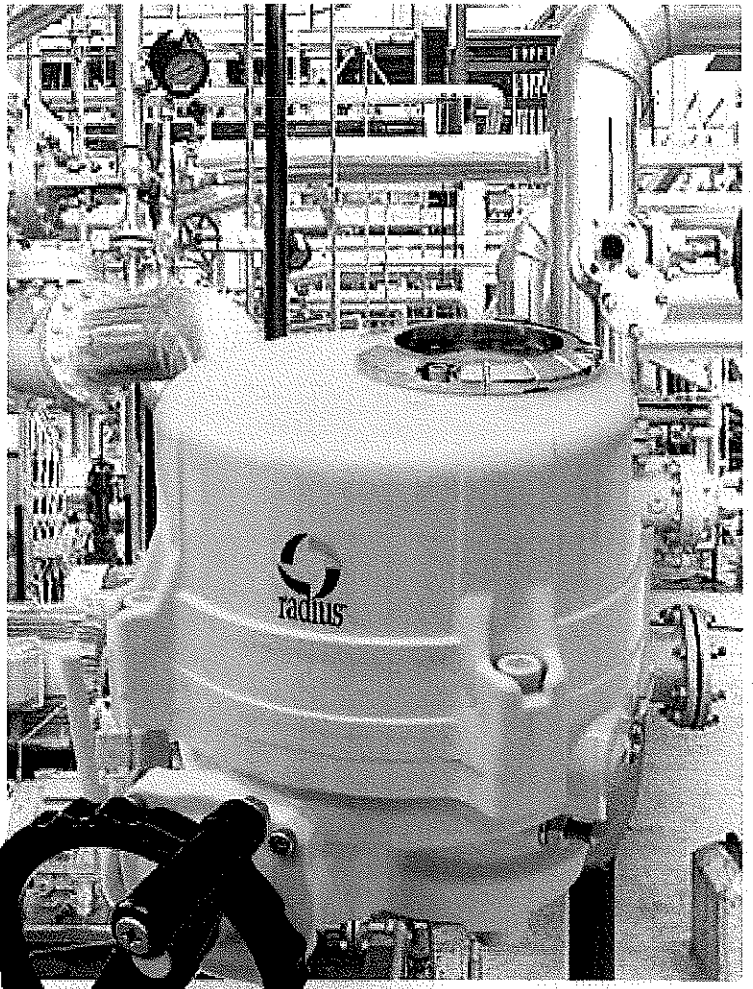

SERIES EW
ELECTRIC ACTUATOR

EW SERIES
TECHNICAL DATA

EW 1400
EW 2100
EW 3100
EW 4400

Radius Series EW quarter turn industrial actuator. The drive system utilizes a self locking double worm gear that requires no brake. The mounting is ISO 5211 and has a removable drive bushing and can be ordered with a blank drive for custom machining. The motor is a specially designed induction motor that produces high starting torques and is thermally protected from overheating. All series EW actuators are equipped with manual override and large dial position indication.

Specifications:
Rated Torque:1400, 2100, 3100 and 4400 inch pounds
Operating Speed: per 90 deg.:
1400 and 2100 26 seconds.
3100 and 4400 31 seconds.
Power Consumption:
1400, 2100, 3100 : 40Watts.
4400: 90 Watts
Insulation Class: E.

Enclosure: IP67, NEMA 4, 4X.
-10-160 deg.F.
Housing: Hard Anodized Aluminum, Polyester coated
Mounting to ISO 5211

STANDARD FEATURES:
Heater/ Thermostat
Built in Thermal Protection
Rotation 90 deg. +/- 5deg.
Manual Override
Worm Gearing: No Brake
4 SPDT Limit Switches 10A
2 Torque switches.10A

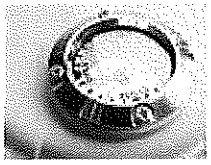

Large Dial Position Indicator

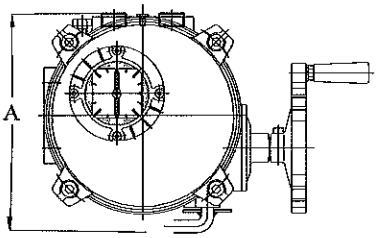

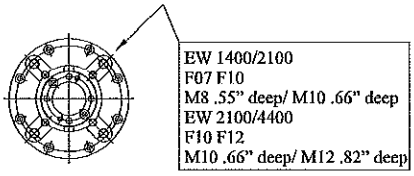

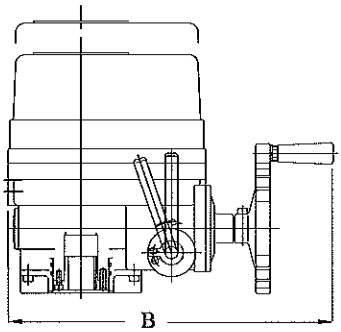

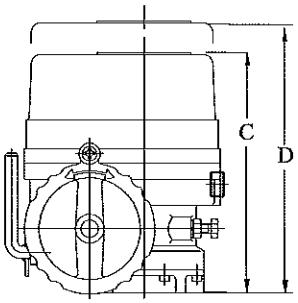

EW SERIES	EW -1400/2100	EW-3100/4400
Torque (in. lbs.)	1400/2100	3100/4400
Power Cosumption	40 Watts	40/ 90 Watts
Operating time 50/60 Hz	50HZ 26 sec. 60HZ 22 Sec.	50HZ 31 sec. 60HZ 26 Sec.
Output Shaft (D)	Blank Drive	Blank Drive
Rated Current(A) Single Phase 50/60Hz	110/50 1.62 110/60 1.72 220/50 .87 220/60 .92	110/50 1.7/3.6 110/60 1.8/3.9 220/50 .92/1.6 220/60 1.6/2.2
Rated Current(A) Three Phase 50/60Hz	380/50/60 .32 440/50/60 .35	380/50/60 .35 440/50/60 .58
Weight	33 pounds	44 pounds
Manual over-ride handle turns/90°	12	14

EW SERIES DIMENSIONS (in.)		
MODEL	EW 1400 EW 2100	EW 3100 EW 4400
FLANGE	F07 F10	F10 F12
A	9.00	9.61
B	13.31	13.94
C	10.08	11.34
D	14.65	17.00

5.5

GUARD SWITCH

GE Security
Industrial

www.ge-security.com/industrial

GuardSwitch™ Series 300

Interlock Switch

371

- ☐ 371-CT
- ☐ 371-DT
- ☐ 371-_____

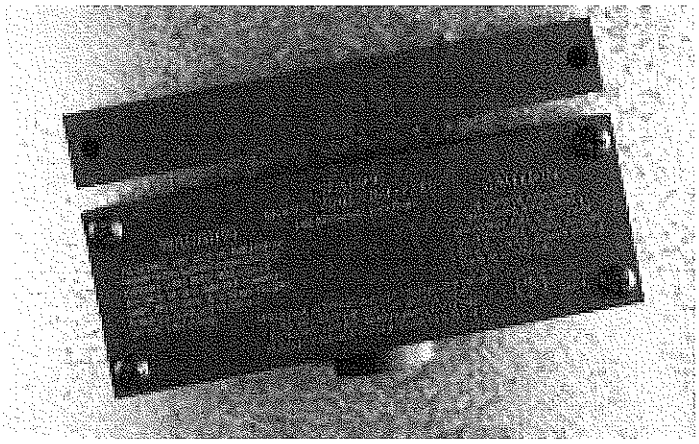

Warning! *To avoid switch failure determine the actual load of the switch circuit and take steps to protect the switch from voltage spikes, current inrush and line/load capacitance using the following recommendations.*

- Surges from coils, motors, contactors, solenoids and tungsten filaments. Transient protection, such as back-to-back zener diodes (Transorb) or an RC network, is recommended for such loads to ensure that maximum ratings of the switch are not exceeded.
- Line capacitance and load capacitance. An in-line resistor can beadded in series immediately before the load to limit the inrush current. The resistor can only be added in series with the last wire just before the load. The voltage drop and the power rating of the resistor must also be calculated as follows:

  Voltage drop = I • R
  Watts = I^2 • R
  (I = maximum continuous current of the load)

To verify switch operation with an ohmmeter:

Set range at 20 mega ohms (switches with triac output, set ohm range at 20 kilo ohms). For a normally open switch, the meter will read a high impedance with the actuator away. It will read very high to infinity range (triac switches will read high kilo ohm to infinity range) with the actuator within sense range. You will see the opposite reading for a normally closed switch.

Dimensions

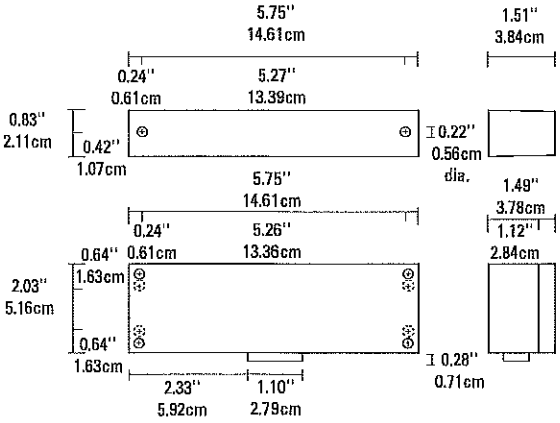

Figure 1

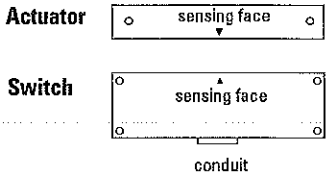

Installation

Use non-removable screws, bolts, or nuts to mount the switch and actuator. Do not over-torque mounting hardware.

1. Position the switch and actuator so the labels are reading in the same direction. (See Figure 1.)
2. Mount the switch on the stationary frame of the machine and mount the actuator on the moveable guard, door or gate. To determine the optimum sense range, shown under the Ordering/Electrical Specifications for each product, attach an ohmmeter to the black and white wires.

   The meter should read "Infinity" with the actuator away from the switch. Bring the actuator toward the switch until the meter reads 0 ohms. Mark this point and bring the actuator closer to the switch until the meter again reads "Infinity." Mark this point and position the actuator between the two marks. Align the actuator with the switch so the labels read in the same direction.

* (For DT models, which incorporate a triac, the meter will read some resistance when the switch is "on," and the direct current (DC) from the meter may cause the switch to latch in the "on" state until the meter is disconnected.)

   The switch and actuator must be mounted so that the actuator moves in one of the approved directions (Figure 2). Parallel actuation is NOT recommended. An on/off/on signal may result when the actuator passes by the switch rather than coming to rest in proximity to it.

3. Mounting on a ferrous material will effect the sense range a minimum of 50%. However, a 1/4" nonferrous spacer positioned under the actuator and/or switch should restore most of the lost sensor range.

continued

4. For best protection against operator defeat, mount with non-removable screws, bolts or nuts (see Accessories).
5. When mounting a metal switch to an ungrounded machine, connect the ground lead to one of the switch mounting screws.

Mounting Configurations

Figure 2

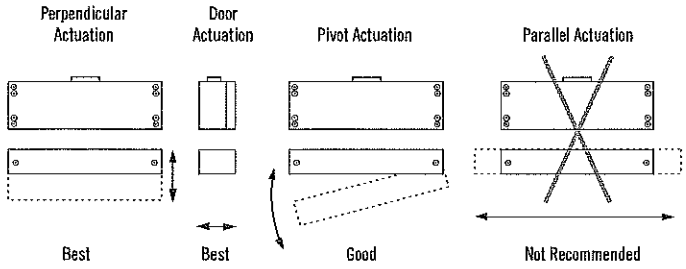

The parallel actuation can result in on/off/on signal if the actuator passes by the switch rather than coming to rest in proximity to it. This is NOT a recommended configuration for safety interlock applications.

General Specifications

Enclosure	UL Explosion Proof, Die Cast Aluminum Class I, Group B, C Class II, Group E, F, G Class III, Divisions 1 & 2
Temperature Range	-40°F to 180°F (-40°C to 80°C)
Environmental	Hermetically Sealed Contact Switch Encapsulated in Polyurethane
NEMA Rating	1, 2, 5
Protection Class	IP 64
Response Time	1 msec (5.4VA); 10 msec (150VA)
Life Cycles	100,000 Under Full Load; Up to 200,000,000 Under Dry Circuit
Conduit Connection	1/2" Threaded NPT
UL	All Models

File E 122942 LR89176-19

Accessories

PART NUMBER	TAMPER PROOF SCREWS & SCREWDRIVER
1953	#6 x 3/4"L Tampruf Roundhead Screw
1954	#8 x 1-1/2"L Tampruf Roundhead Screw
1955	Tampruf® Screwdriver
1956	Tampruf® 1/4" Drive Bit for #6 and #8 Screws

Ordering/Electrical Specifications

PART NUMBER	CONTACT[1] CONFIG.	LOAD RATING AC/DC	SWITCHING VOLTAGE MAXIMUM, AC/DC		SWITCHING CURRENT MAXIMUM, AC/DC		CONTACT RESISTANCE	NOMINAL SENSE RANGE[2] Max.	Min.	BREAK RANGE NOMINAL	TERMINAL TYPE
371-CT	N.O.	2.5VA/2.5W	30V@0.08A	30V@0.08A	0.18A@13.8V	0.18A@13.8V	0.5 Ohms	0.5"(1.3cm)	0.25"(0.635cm)	1.2"(3.0cm)	#6 Screws
371-DT[4]	N.O. triac output	150VA/NA	120V(@1.25A)	NA	1.25A[3](@120V)	NA	NA	0.5"(1.3cm)	0.25"(0.635cm)	1.2"(3.0cm)	#6 Screws

Warning:— Each electrical rating is an individual maximum and cannot be exceeded!

1 Configuration with actuator away from the switch

2 Proximity of ferrous materials usually reduces sense range — typically by 50%. The shape and type of material cause a wide diversity of effects. Testing is required to determine actual sense range for specific applications.

3 Can withstand inrush surge up to 4 amps. Voltage drop is 1.5V. Minimum Switch Current 30mA.

4 Do not exceed 10 switches in series.

GE Security *Industrial*

www.ge-security.com/industrial

12345 SW Leveton Drive
Tualatin, OR 97062
Phone: 800-247-9447
Fax: 503-691-7563

©2004 GE Security Industrial. GE Security Industrial reserves the right to change specifications without notice.

I-3993-0204 11510 Rev E

WASTE-TECH
a division of KUSTERS ZIMA

5.6

LEVEL SENSORS

ENGINEERING SUBMITTAL

WENATCHEE WWTP IMPROVEMENTS

NON-MERCURY FLOAT SWITCH

Manufacturer:	Conery Mfg. Inc.
Model no.:	2900-B3-S1-C3 (Mercury-free)
Contacts:	Normally Open
Electrical Rating:	10A @ 120VAC
Float Switch Actuation Angle:	5 degrees above horizontal
Temperature Range:	32º - 190ºF

CONERY™ MFG INC

Control Duty Mechanical Narrow Angle Switch

Designed for accurate liquid level control in many applications including potable water or sewage environments. The float switch can be utilized to signify specific water levels or for direct alarm actuation.

The mechanically activated micro switch is designed to operate under a min/max temperature of 32-190° F, and has an electrical rating of 10 AMPS @ 120 VAC or 5 AMPS @ 240 VAC. The power cord is a chlorinated polyethylene type SJOOW-300 Volt on 16/2 for N/O or N/C switch or 16/3 for SPDT switch.

The float is constructed of a durable ABS material, and is tested and proven to be leak proof, shock proof, and impact resistant. The cord weight is made of zinc plated cast iron. At 1.22 lbs. the split weight design allows for easy adjustment, and a secure and permanent attachment to the cord.

NORMALLY OPEN (N/O)

As the float rises 1" (5°) above horizontal, the contacts become closed and actuate (turn on) the switch. This float is generally used in pump down applications.

NORMALLY CLOSED (N/C)

As the float rises 1" (5°) above horizontal, the contacts become open and actuate (turn off) the switch. This float is generally used in pump up applications.

SINGLE POLE, DOUBLE THROW (SPDT)

A variation of the N/O & N/C, this float switch can be wired to operate as either (but not both) a normally open or a normally closed switch based on the user's need.

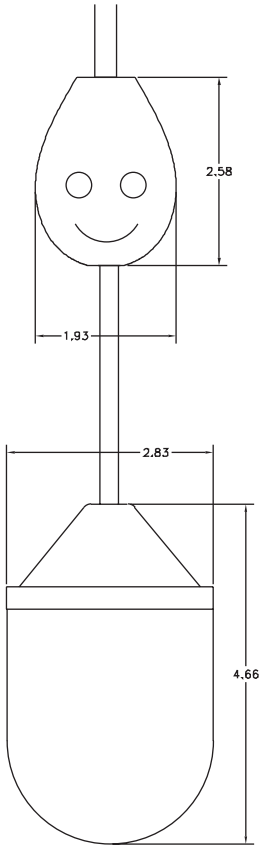

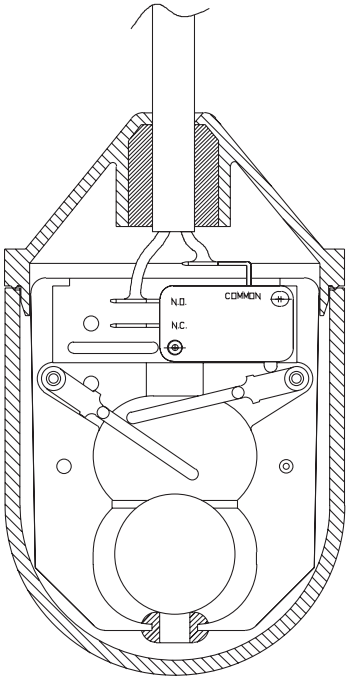

Download a variety of files from www.conerymfg.com

Tel: 419-289-1444 • Fax: 419-281-0366 • Email: info@conerymfg.com

Control Duty Mechanical Narrow Angle Switch

Normally open control duty float switch

Single pole - single throw

10 AMP @ 120 VAC narrow angle mechanical switch		10′	15′	20′	25′	30′	40′	50′
2900 - B3-S1	Mechanical (Mch) bulb	$30.50	$32.50	$36.50	$40.50	$44.50	$52.50	$60.50
2900 - B3-S1-C1	Mch bulb w/cord weight	$35.00	$37.00	$41.00	$45.00	$49.00	$57.00	$65.00
2900 - B3-S1-C3	Mch bulb w/clamp - stainless band	$34.00	$36.00	$40.00	$44.00	$48.00	$56.00	$64.00
2900 - B3-S1-C4	Mch bulb w/releasable tie strap	$33.00	$35.00	$39.00	$43.00	$47.00	$55.00	$63.00

Normally closed control duty float switch

Single pole - single throw

10 AMP @ 120 VAC narrow angle mechanical switch		10′	15′	20′	25′	30′	40′	50′
2901 - B3-S1	Mechanical (Mch) bulb	$30.50	$32.50	$36.50	$40.50	$44.50	$52.50	$60.50
2901 - B3-S1-C1	Mch bulb w/cord weight	$35.00	$37.00	$41.00	$45.00	$49.00	$57.00	$65.00
2901 - B3-S1-C3	Mch bulb w/clamp - stainless band	$34.00	$36.00	$40.00	$44.00	$48.00	$56.00	$64.00
2901 - B3-S1-C4	Mch bulb w/releasable tie strap	$33.00	$35.00	$39.00	$43.00	$47.00	$55.00	$63.00

Normally open/closed control duty float switch

Single pole - double throw (SPDT)

10 AMP @ 120 VAC narrow angle mechanical switch		10′	15′	20′	25′	30′	40′	50′
2902 - B3-S2	Mechanical (Mch) bulb	$43.50	$45.50	$52.00	$58.50	$65.00	$78.00	$91.00
2902 - B3-S2-C1	Mch bulb w/cord weight	$48.00	$50.00	$56.50	$63.00	$69.50	$82.50	$95.50
2902 - B3-S2-C3	Mch bulb w/clamp - stainless band	$47.00	$49.00	$55.50	$62.00	$68.50	$81.50	$94.50
2902 - B3-S2-C4	Mch bulb w/releasable tie strap	$46.00	$48.00	$54.50	$61.00	$67.50	$80.50	$93.50

Additional float switch options
packaging options

Bulk boxed - standard
K1 Individually boxed ADD $1.25 to list price per float switch
K2 Individually bagged ADD $1.00 to list price float switch

Cable length options

S1 Additional cable lengths ADD $4.00 to list price per float switch per 5′
S2 Additional cable lengths ADD $6.50 to list price per float switch per 5′

2900 MULTI FLOAT SYSTEM

A typical simplex pump installation showing a pump on and off float with a high water alarm float. (A duplex station would have four floats). All pump cords are connected in the Junction Box , with wiring going to the control panel at another location. The #2900 float switches will control all types of pumps.

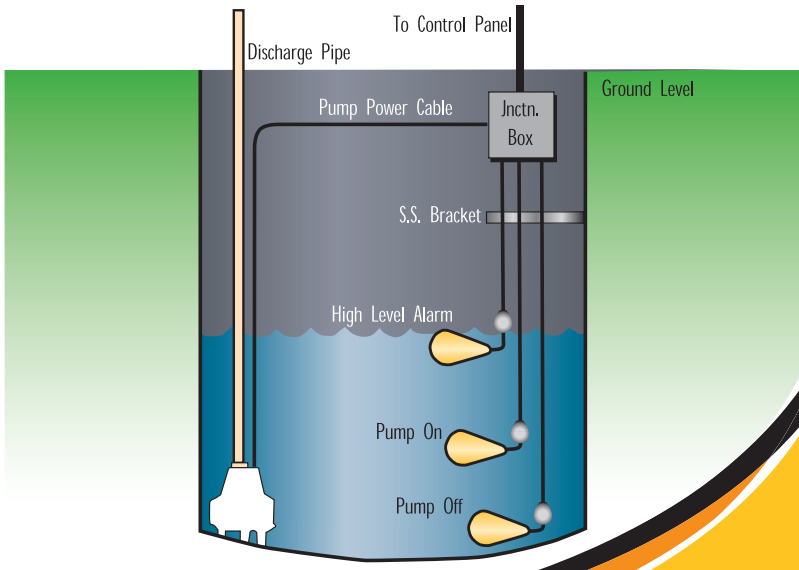

5.7

PRESSURE SENSOR

DIMENSIONS ARE IN INCHES UNLESS OTHERWISE NOTED

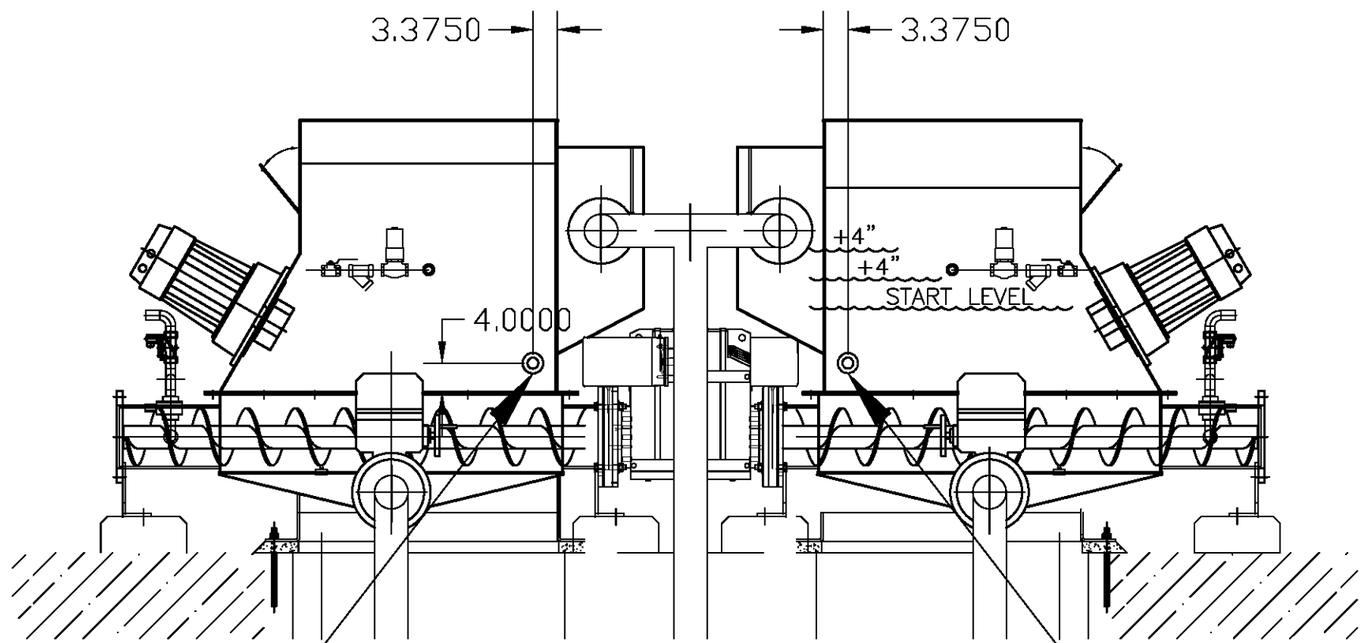

(ON THE NEAR SIDE OF HOPPER)
1.5" NPT for LEVEL SENSOR
(PARTIAL COUPLING SUPPLIED
BY KUSTERS WATER, 316SS,
LOCATED AS SHOWN)

(ON THE AWAY SIDE OF HOPPER)
1.5" NPT for LEVEL SENSOR
(PARTIAL COUPLING SUPPLIED
BY KUSTERS WATER, 316SS,
LOCATED AS SHOWN)

ELEVATION VIEW from DUMPSTER AREA

Compact hydrostatic level measurement system

Hydrocont K

with dry capacitive measurement membrane,

adjustable measurement range, with adjustable damping

+ High accuracy adjustable fill level measurement with adjustable damping

+ Up to 80 times overload resistance, high clean ceramic membrane 99,9%

+ Suitable for CIP and SIP cleaning

+ Various food flanges, tube prolongation or carrying cable

+ Connection housing in steel or various plastics

+ Connection housing with clamp room or plug

+ Integrated analogue 2-wire-electronic module AMK for current signal 4...20mA

+ Integrated over voltage protection in electronic module AMK - 400

+ Adjustment by customer specification

Application:

The device **Hydrocont K** with integrated analogue evaluation electronic is a compact sensor for continuous measuring of fill levels in liquid media.
The excellent characteristics like highest strength against pressure and pressure blows, high resistance against chemicals and corrosion, very good insensitiveness against temperature shocks and EM interference, highest accuracy and long term stability and also low influence of temperature makes it possible for use in all pressure-less containers for liquid media like water, waste water, solvents, oil, sludge, grease, cleaning agents, etc.

Function:

The level measurement system **Hydrocont K** is built in the wall of the medium container.
The medium contacts directly the ceramic membrane of the sensor without using a pressure mediator liquid and causes there a deflection of the membrane because of the hydrostatic pressure of the medium.
At the maximum deflection the membrane contacts a robust ceramic carrier and because of this, the membrane come through over pressure of e.g. 80-times of nominal load at a sensor with a pressure range of 0...50 mbar without damage.
The fill level proportional pressure signal of the ceramic membrane is measured by the integrated analogue electronic and converted into a output current signal of 4...20mA according to the zero and end point settings of the user.
The current signal can be influenced with an adjustable damping, e.g. to compensate wave movements due to mixing machines.

Electrical data:

Output	4...20 mA	minimum ≤ 3,1 mA ± 0,4 mA / maximum ≤ 27 mA
	permitted load	$R_{L\,max} = (V_{S\,act} - V_{S\,min}) / 20$ mA ➔ see scheme
Permitted supply voltage:	12,5 V to 45 V DC	
	for Ex-variant 12,5 V to 30 V DC	
Ripple voltage:	≤ 2 V_{ss} (condition: within the permitted supply voltage range)	
Temperature deviation:	≤ 0,1% / 10 K	of nominal measurement range
Characteristic deviation:	≤ 0,1% / 0,2%	of nominal measurement range (see order code)
Calibration deviation:	≤ 0,05%	of nominal measurement range
Long term deviation:	≤ 0,1% /year	of nominal measurement range
Influence of supply voltage:	≤ 0,01 / 10V	of nominal measurement range
Resolution:	infinite, analogue measurement electronic	
Adjustment range signal:	maximum zero point increasement	≥ 27,5% of nominal measurement range
	minimum measurement range	≤ 24% of nominal measurement range
Delay time output:	T90 ≤ 100µs	
Adjustment range damping:	0...25 seconds / stepless / exponential damping function	
EMC specifications:	EN 61326	industrial environment, class A
Over voltage protection:	Max. signal voltage: 30V (peak value; to earth)	
	Nominal bypass surge current: 10 000A (wave 8/20µS)	
	Trigger voltage of transil diodes ➔ 33V	
	Trigger voltage of surge arrester ➔ 90V	
	Over voltage protection not for Ex-zone 0	

Max. load resistance in dependence of the supply voltage at I = 20mA

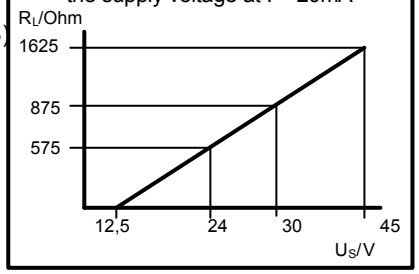

Mechanical data:

Protection:	sensor / process connection	➔ IP68
	connection housing with clamp room	➔ IP68
	connection housing with plug M18x1 or plug according to DIN43650-A	➔ IP65
Material membrane:	standard ➔ AL_2O_3 96%	
	high clean ➔ AL_2O_3 99,9%	
Material process connection:	steel 1.4404 / ceramic AL_2O_3 99,7% / navy bronze CU SN 12 / Hastelloy B / PEEK	
Material seal:	FPM (viton) / EPDM / neoprene / perfluorelastomere / welded (only for pressure mediator)	
Material connection housing:	polyacetale POM (delrin), polypropylene PP / steel 1.4404	
Material carrying cable:	PE / FEP	
Material tube prolongation:	steel 1.4404 / polytetrafluorethylene PTFE	
Permitted media temperature:	standard ➔ -20°C...+125°C (short-time up to 140°C)	
	carrying cable ➔ -20°C...+70°C	

Operation / storage temperature: -20°C...+85°C (for carrying cable -20°C...+70°C)

connection - plug M18 x 1

plug occupation

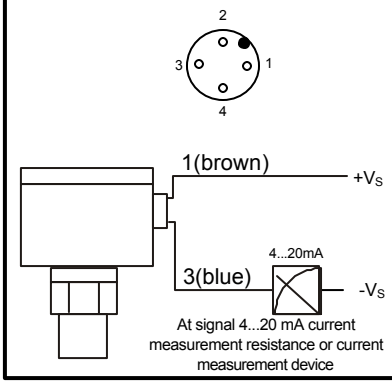

connection – clamp room

clamp 1 ➔ I_{Signal}
clamp 2 ➔ $+V_S$
clamp 3 ➔ I_{OUT} (4…20mA)
clamp 4 ➔ PA/shield

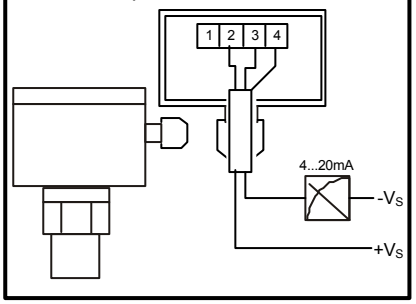

Compact hydrostatic level measurement system Hydrocont K

with dry capacitive measurement membrane,

adjustable measurement range, with adjustable damping

Assembly, electrical installation and inauguration, maintenance:

Assembly, electrical installation, inauguration, operation and maintenance of the device must be carried out by an qualified employee. The electrical installation of the device must be carried out according to the respective country specific standards. An incorrect assembly or adjustment could cause applicationally conditioned risks. The device is maintenance free.

The voltage applied to the contacts or to the clamps may not exceed 45 V to avoid damage of the electronic.
All connections are polarity protected.

Use only shielded signal and measurement wires and install these wires separated from power leading wires. Connect the shield only at one side to earth, ideally at the installation place of the device. The earth connection of the cable shield of an connected cable can be carried out at the installation place of the connection housing by the clamp PA.

The metallic parts of the device are electrically connected with the clamp PA in the connection housing.

The materials for housing, process connection, seals and cables must be selected corresponding to the respective operating conditions (medium, temperature). An unsuitable material can cause damage, abnormal behaviour or destruction of the device and from that it can lead to resulting danger.

The device meets the legal requirements of the EC-guidelines. CE 0032

Rotation of the connection housing:

Remove at first the cover of the connection housing. Then the electronic module must be removed. Therefore you have to release the two screws that fixes the electronic module. When pulling out the electronic module take care that the sensor cables that are connected at the underside of the electronic module will not be damaged. Loosen now the three screws below. Rotate the adapter housing into the desired orientation. Now fix the three screws, put in the electronic module and fix it again with the two screws. After that screw on the cover of the housing.

Connection of a cable to the connection housing with clamp room:

Remove at first the cover of the adapter housing. The cable must be lead into the housing through the cable gland. Now the cables can be connected to the clamps. After the connection of the cables screw on the cover of the housing. The cable gland must be fix screwed on after connecting the cables to achieve the tightness of the housing.

Connection of a cable at a sensor with plug DIN 43650-A:

For connecting the cable to the housing variant with plug you must release at first the screw of the plug and then remove the plug from the plug socket. The clamping socket must be gathered out of the plug from the contacting side. The cable must be lead into the plug through the cable gland and than the wires can be connected to the terminals of the clamping socket. After connecting the cable replace the clamping socket back into the plug and the cable gland must be fix screwed on after connecting the cables to achieve the tightness of the plug. The plug can now be put on the plug socket. Fix the screw of the plug again.

Adjustment of the device:

The device can be adjusted by two potentiometers that are integrated in the electronic module. To simplify the procedure a current measurement device can be connected to the terminals 1 and 2 without disconnection the measurement circuit.
Adjustment zero point: apply Medium to minimum fill level and adjust a current of 4mA with the zero potentiometer.
Adjustment end point: apply Medium to maximum fill level and adjust a current of 20mA with the zero potentiometer.
A clockwise rotation increases the signal current, a counterclockwise rotation decreases the signal current.
At greater variations of the measurement range it can be possible that the zero and end adjustment must be repeated one or two times because a change of the zero adjustment influences also the end adjustment.

Safety notes:

If a device is installed and operated in a hazardous area, the general Ex construction standards (EN60079-14, VDE0165), this safety notes and the enclosed EC conformity certificate must be observed.
The assembly of an Ex system must be carried out principally by specialist staff.

The devices meets **II 1/2 G EEx ia IIC T4 resp. II 2 G EEx ib IIC T4 with Ta £ +85°C**

The devices are conceived for measurement of filling levels in hazardous areas.
The measured medium may also be combustible liquids, gases, fogs or steams.

The permitted operating temperatures and pressures are type and variant dependent and can be found in this technical documentation.

At devices with over voltage protection the intrinsic safe signal and supply circuit is earthen for safe technical function. Provide sufficient potential compensation along the complete cable way. Install the intrinsically safe circuit earth free.

At versions of the devices with chargeable plastic parts (e.g. connection housing, cable), a warning marking points out to the safety measures, that must be applied because of the electrostatic charging in operation and especially in the case of maintenance activities.

avoid friction no dry cleaning no assembling in pneumatic conveying stream

Compact hydrostatic level measurement system
with dry capacitive measurement membrane,
adjustable measurement range, with adjustable damping

Hydrocont K

BA0404 Installation and operating instructions Page 4 of 5

certificate:

K	without certificate		
Ex 0K	II 1/2 G EEx ia IIC T4	for Ex-zone 0	
Ex 1K	II 2 G EEx ib IIC T4	for Ex-zone 1	

type:

S	standard	G 1½“	for installation sleeve BEF-60
K	short form	G 1½“	for process connection order code A ➔ G 1½“
T	carrying cable		
R	tube prolongation		
F	front flush membrane		
O	G ½“ A	screw thread	DIN16288
H	high temperature variant 140°C, vegetable oil filling, metal membrane (with pressure mediator)		
I	pressure mediator in PTFE	G 1½“	
Y	special models on inquiry		

type measurement membrane:

0	ceramic AL_2O_3	96%, accuracy 0,2%
H	ceramic AL_2O_3	99,9% high clean, accuracy 0,2%
K	ceramic AL_2O_3	96%, accuracy 0,1% with linearization certificate
L	ceramic AL_2O_3	99,9% high clean, accuracy 0,1% with linearization certificate

process connection:

A	G 1½“	screw thread	for installation sleeve BEF-60
K	G 1½“	screw thread	ceramic AL_2O_3 99,7%
M	milk tube	DN 50	DIN 11851
N	milk tube	DN 40	DIN 11851
O	varivent flange	DN 68	
L	DRD flange	DN 65	
F	flange	DN 40 / PN 40	front flush membrane
G	flange	DN 50 / PN 16	
T	tri-clamp 2“		ISO 2852
P	G ½“A	screw thread	DIN16288
R	flange	DN 80	
6	G 1½“	screw thread	PEEK
Y	pressure mediator		
-	without process connection		

transmitter electronic:

1	AMK - 300	4...20 mA	2-wire-electronic	without over voltage protection	
2	AMK -400	4...20 mA	2-wire-electronic	with over voltage protection	not for Ex-zone 0

measurement range:

0	0...200 mbar	(max. 5 bar)	7	-1...+1 bar	(max. 10 bar)
1	0...400 mbar	(max. 5 bar)	8	-1...+6 bar	(max. 40 bar)
2	0...1 bar	(max. 10 bar)	9	0...100 mbar	(max. –0,3/+4 bar)
3	0...2 bar	(max. 15 bar)	A	0...25 bar	(max. 40 bar)
4	0...4 bar	(max. 25 bar)	P	0...50 mbar	(max. –0,3/+4 bar)
5	0...10 bar	(max. 40 bar)	E	0...1 bar absolute	(max. 10 bar)
6	0...20 bar	(max. 40 bar)	H	0...4 bar absolute	(max. 25 bar)
			Y	special measurement range	

material connection housing:

A	PP (polypropylene)
C	steel 1.4404
D	POM (polyacetale - delrin)

sensor connection:

1	clamp room
2	plug M18x1
S	plug according to DIN43650-A

material process connection

1	steel 1.4404
2	ceramic AL_2O_3 99,7%
3	navy bronze CU SN 12
4	hastelloy B
6	PEEK

seals:

1	FPM (viton)
2	neoprene
3	EPDM (for food)
4	perfluorelastomere (kalrez)
5	welt together (only for pressure mediator)

variant sensor prolongation:

E	carrying cable FEP
A	carrying cable PE
C	tube 40 mm / steel 1.4404
F	tube 40 mm / PTFE
D	tube 16 mm / steel 1.4404
X	others on inquiry
0	no prolongation

sensor length incl. process connection:
measure in mm

Hydrocont	_	_	_	_	_	_	_	_	_	_	_	_ _ _ _ _ _

Compact hydrostatic level measurement system

with dry capacitive measurement membrane,
adjustable measurement range, with adjustable damping

Hydrocont K

BA0404	Installation and operating instructions	Page 5 of 5

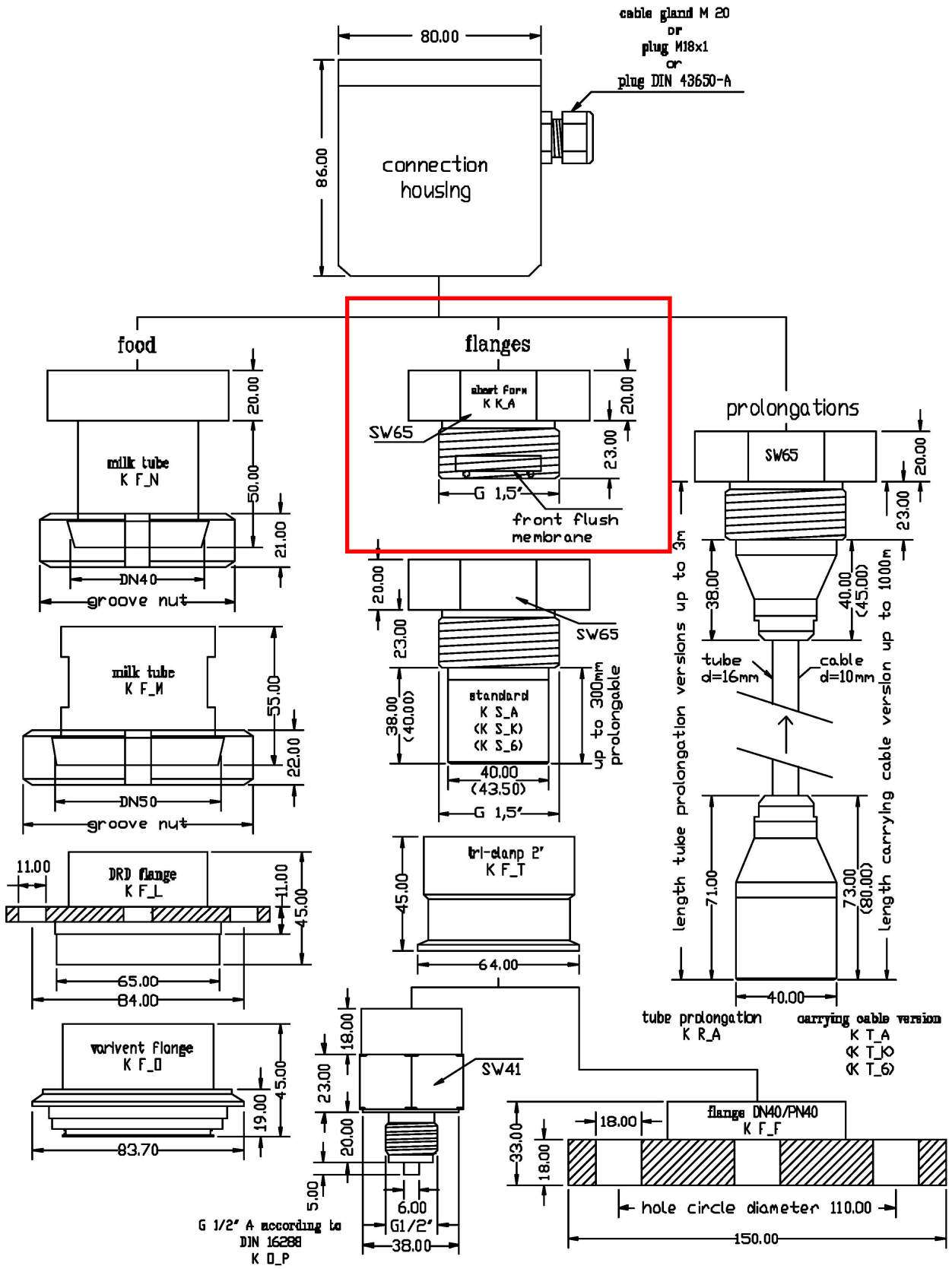

WASTE-TECH
a division of KUSTERS ZIMA

5.8

SPW 200
OPERATION & MAINTENANCE

WASTE-TECH
a division of KUSTERS ZIMA

Operating & Maintenance

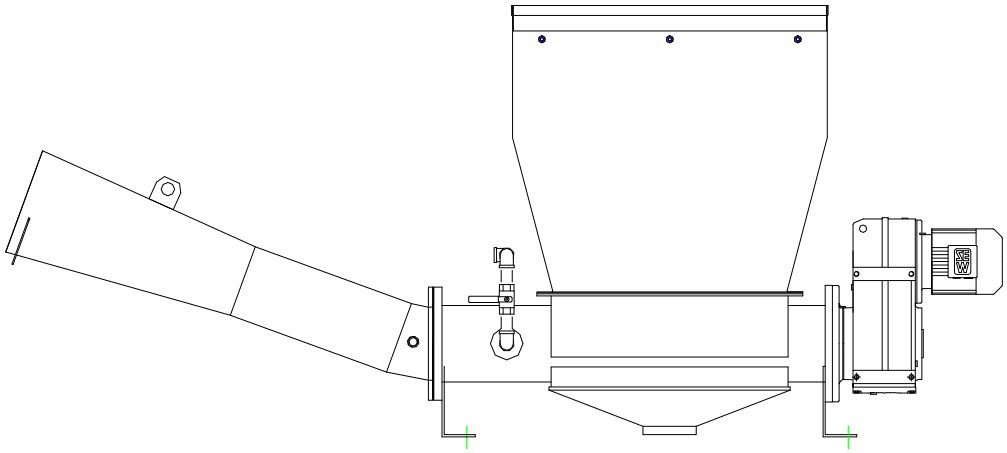

Screenings Washer Compactor
SPW 200

CONTENTS

1. GENERAL DESCRIPTION OF SCREENINGS COMPACTOR 4

2. TECHNICAL DATA SPW 200 – INSTALLATION INSTRUCTIONS 5

3. MAINTENANCE/ INSPECTION OF SCREENINGS COMPACTOR 6

3.1 Lubricants and filling quantities: SEW gearboxes 6

3.2 Maintenance/ Inspection: Screenings Compactor 7

4. SPARE PARTS 9

5. OPERATION CONDITIONS 10

5.1 Preparations for starting up 10

5.2 Starting up 10

5.3 Shutting down 11

5.4 Restarting 11

6. TYPES OF FAULT: SCREENINGS COMPACTOR 12

6.1 Screenings compactor does not switch on 13

6.2 Conveyor trough and screenings hopper full of water and screenings 14

6.3 Screw compactor drive rotates but screenings not conveyed 15

6.4 No rinse water 16

7. ASSEMBLING & DISASSEMBLING SCREENINGS COMPACTOR 17

8. SAFETY PRECAUTIONS 18

!

Please read the operating instructions carefully before you commence starting up or carry out fitting or maintenance work.

1. General Description of Screenings Compactor

The SPW 200 screenings compactor is used to dewater and compress (compact) screenings or other moist (wet) waste products.

The waste products are discharged directly from the Filter screen or via a belt conveyor or screw conveyor into the feed hopper. The worm screw transports, dewaters and compresses the waste products.

The water removed by this process is returned to the wastewater drain via a collecting sump.

The screenings compactor is a sturdy steel construction. The worm flights, which are made of wear-resistant material, are welded to the worm shaft.

The screenings compactor is driven by a closed, flat SEW geared motor.

The SPW 200 compactor with integrated washing device is a further development of the screw compactor (type SP). Fecal substances are loosened and washed out from the compressing zone of the screw compactor by a washboard/friction process. Hair, fibres, etc. which could cause malfunctioning and blockages in downstream equipment are retained in the screened material.

The screenings compactor is able to deal with sudden increases in load faster than conventional screw compactors. It compensates for accumulations in the feed hopper without bridging. The only additional energy required is the provision of process water.

The screenings compactor must be installed in a heated area to protect it from freezing in winter.

Screw-type compactors have been used for many years in the following sectors:

- sewage plants / wastewater sector / pumping stations
- paper industry
- food industry (e.g. breweries).

2. Technical Data - SPW 200:

Screw diameter:	8” nominal
Approx. screw length:	48” (dependent on body length)
Compactor speed:	8 rpm
Drive Unit:	Helical gear reducer
Screenings volume reduction:	80%
Wash water	10-15 gpm @ 40-50 psig per wash zone (agitating washer requirements may be more – check your project O&M document)

Installation Instructions

SCREENINGS COMPACTOR
STEP-BY-STEP INSTALLATION INSTRUCTIONS

1. If the Compactor inlet hopper is not mounted to the Compactor, turn the adjustable edge toward the screen. Line up the mounting holes on the Compactor inlet flange and the mounting holes on the inlet hopper flange. Install bolts provided and tighten.
2. On the Filter screen discharge, loosen the black locking knobs (1 per side) at the hinged discharge chute (Figure 1). The hinged discharge chute can be lifted open to allow for clearance for lining up the Screenings Compactor. Raise the compactor until the hopper seals under the roller.
3. Move the Compactor so that the inlet hopper is aligned under the screenings discharge chute (Figure 2).

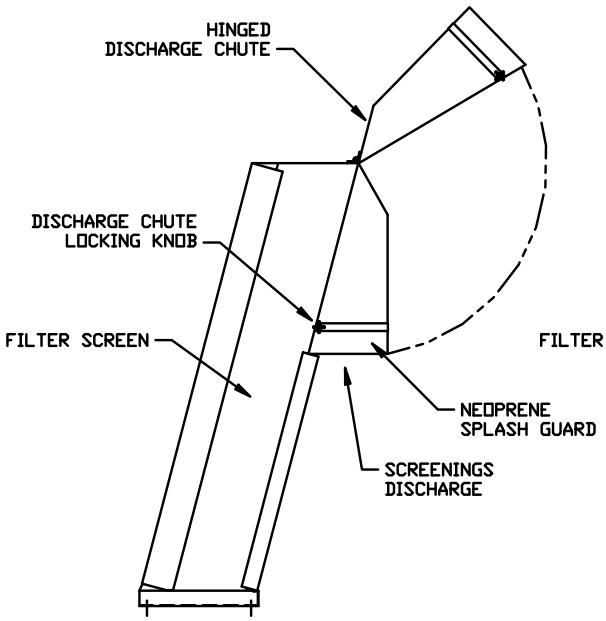

FIGURE 1

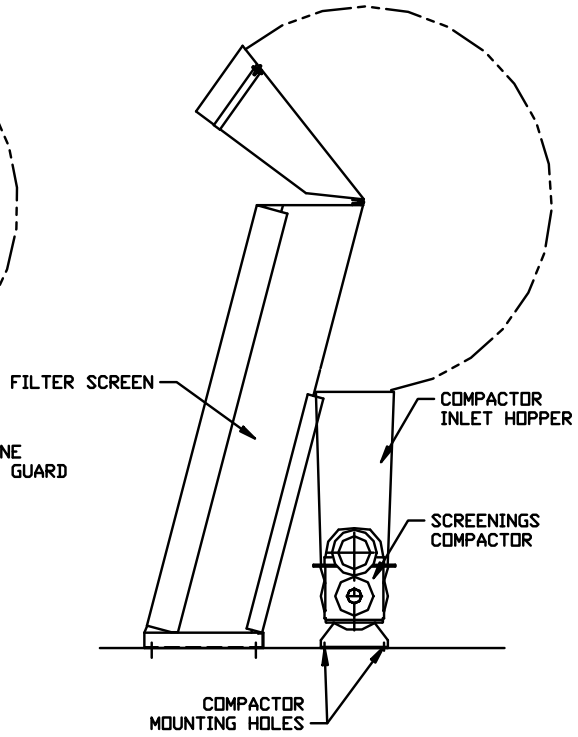

FIGURE 2

4. When the Compactor is located, mark the Compactor mounting holes on the concrete base.

5. Re-check compactor location/alignment before installing anchors.

6. Drill and install the Chemical anchors (supplied, see Anchor bolt details for proper installation).

7. After the Anchor bolts have been installed and allowed to set, lower the Compactor over the anchor bolts aligning the mounting holes on the anchor bolts (Figure 3). Level the Compactor precisely and shim as required. Grout fill Compactor Mounting Base and tighten mounting nuts on anchor bolts (Figure 4).

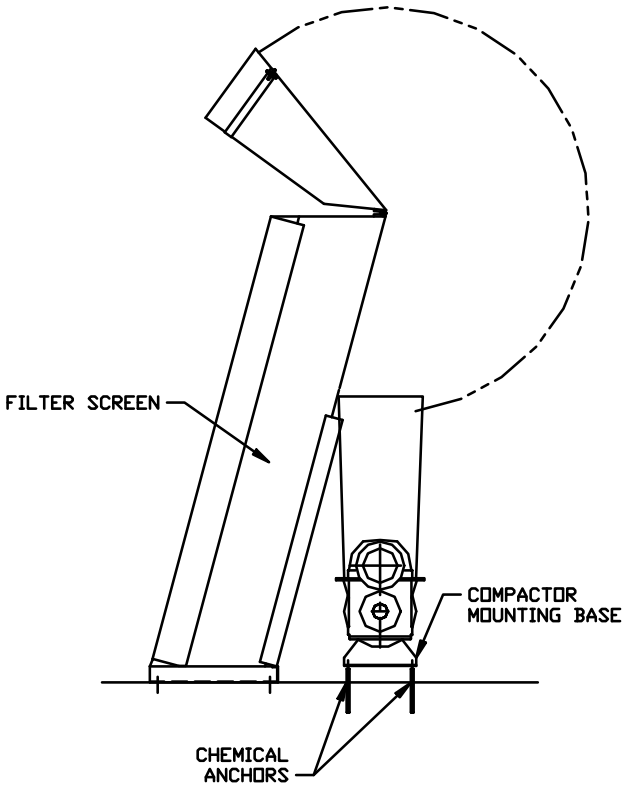

FIGURE 3

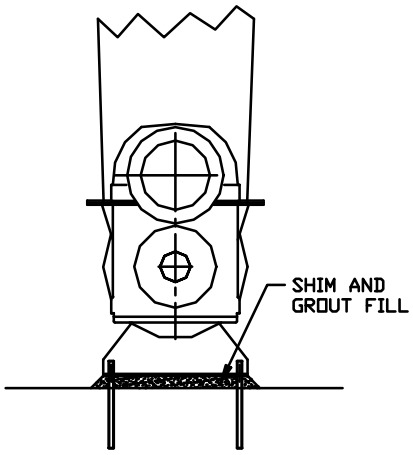

FIGURE 4

8. The Filter Screen Hinged Discharge Chute can now be lowered down into operation position and locking knobs tightened.
9. Attach the drain hose and install the Compactor discharge chute.
10. Wire the drive motor
10. Connect the washwater piping.

3. Maintenance / Inspection of Screenings Compactor

3.1 Lubricants and Fill Quantities: SEW Gearboxes

FOR LUBRICANT DETAILS PLEASE CHECK GEARBOX SPECIFICS

The intervals stated and their contents apply to 50% operating factor. These are the minimum required maintenance activities which must be carried out at shorter intervals depending on the operating conditions on site and due to increased loading.

Maintenance must be carried out when one of the criteria time or running period applies. Maintenance must be carried out against the criterion which appears first.

All maintenance work which is scheduled for a shorter interval must always be carried out when maintenance is due.

Parts subject to wear must be replaced at the latest when they have reached the limit of wear.

The following definition of time intervals for operating hours is for 50% operating factor:

- D = Daily (or every 12 operating hours)
- W = Weekly (or every 85 operating hours)
- M = Monthly (or every 360 operating hours)
- Q = Quarterly (or every 1080 operating hours)
- 6M = Every 6 months (or every 2160 operating hours)
- Y = Yearly (or every 4320 operating hours).

A daily check patrol of the screening plant is necessary.

3.2 Maintenance / Inspection: Screenings Compactor

Units	Screenings Compactor SPW 200					
Measure	**D**	**W**	**M**	**Q**	**6M**	**Y**
Inspections	X					
leakages, housing		X				
tightness of bolts					X	
smoothness of running		X				
solenoid valve and ball cock					X	
corrosion						X
damage		X				
outlet case			X			
pressure reducer					X	
tighten wearing strip				X		
wear of worm flights						X
Maintenance						
cleaning with high pressure cleaner outside				X		
grease bearings		X				
oil change, gearbox						X
resetting brush				X		
remove and clean jets					X	
corrosion prevention in case of damage						X
Checking						
electrical controls						X
emergency stop button				X		
mechanical equipment						X
all fasteners for tightness		X				

Maintenance: To avoid accidents, never carry out maintenance work on the machine when it is running.

Precautions must be taken to ensure that the compactor is not switched on by an unauthorized person during maintenance work.

The greasing instructions must be observed and the prescribed grease used.

Lubrication: The screenings compactor works substantially maintenance-free.

However, the bearings should be greased with lithium-based roller bearing grease once a month. We recommend 3 - 5 squirts from a suitable grease gun.

The geared motor is provided with lubricant in liquid form.

Component / Mechanism	Maintenance Action	Recommended Interval
Gearbox	Oil Change	Once per year
Shaft Bearings	Grease	Every 4 weeks, or after 100 operating hours
Wear Strips of Worm Shaft	Tighten	4 times per year

4. Spare Parts

The parts of the machine which are subject to wear are listed in our spare parts section and can be supplied & fitted by the manufacturer.

5. Operation Conditions

5.1 Preparations for Start-Up

Set up the screenings compactor horizontally and anchor securely. Make sure that the equipment is levelled properly.

If it is to be located above a screen flume, a suitable bracket must be provided for this, if not supplied by us.

If not already fitted, fit output pipe and feed hopper.

Connect up water and power supplies.

C A U T I O N!

When working on the screw compactor, the main switch of the electrical controls must be set to zero (0).

Before starting up the compactor, please ensure that the following points are complied with:

- It must be properly anchored at the correct position.
- It must properly greased in accordance with the greasing instructions.
- Check the direction of rotation – it must turn in the “forwards” direction, feeding.
- Material in the direction of the output pipe.
- A screenings container must be provided.

Test run without material

Check for correct functioning, direction of rotation and electrical controls.

Test run with material
For the first charge, actual output material is used.
A plug is formed, which gradually becomes more compact.

5.2 Starting Up

C A U T I O N!

Before starting up the screw compactor, make sure that there is nobody still working on or near it.

Notes on automatic operation
Starting of the compactor is automatically triggered by the operation of the filter screen. When the filter belt is occupied, the water rises in the flume and the filer screen starts to operate.

At the same time, the compactor starts to operate and switches off after the filter screen has stopped, with an adjustable run-out time.

Notes on manual operation
Switch over to manual at the control cabinet and operate the ON switch.

5.3 Shutting down

When shutting down, operate the emergency stop button and set the compactor controls to zero (0).

5.4 Restarting

When restarting, set the main switch of the compactor to ON (1) and operate the emergency stop button.

6. Types of Fault: Screenings Compactor

The following descriptions of malfunctioning are intended to help the operator to analyze the cause of the fault and eliminate it.

6.1 Screenings Compactor Does Not Switch On

Item	Possible cause	Fault analysis	Remedy
1	electric motor	winding faulty	manufacturer, replace electric motor
2	motor protection switch	triggered protection switch	switch on motor protection switch in control cabinet at local operating panel
3	emergency stop button	emergency stop button triggered, check function	pull out emergency stop button
4	motor protection switch	repeated triggering of motor protection switch	screw compactor is jammed by bulky material
5	screw compactor faulty	check locally	manufacturer
6	motor protection switch	repeated triggering of motor protection switch, drive blocked, faulty gearbox	check oil level in flat gearbox, replace flat gearbox

Screenings Compactor

6.2 Conveyor Trough and Screenings Hopper Full of Water and Screenings

Item	Possible cause	Fault analysis	Remedy
1	perforated sieve blocked	torn brush at worm screw	manufacturer, replace brush
2	outlet of dewatering case blocked	dismantle outlet case	clean outlet case
3	outlet pipe blocked	dismantle outlet pipe	clean outlet pipe
4	rinsing of wash compactor faulty	check solenoid valve	Manufacturer
5	Compactor Off-Delay Timer improperly set	Check Off-Delay Timer	Adjust as required

Screenings Compactor

6.3 Screw Compactor Drive Rotates but Screenings Not Conveyed

Item	Possible cause	Fault analysis	Remedy
1	worm screw faulty	dismantle screenings hopper, check locally	manufacturer, replacing worm screw
2	worm flights of screw compactor worn out	check locally	manufacturer, dismantling of worm shaft and welding on of new blades
3	blocked output pipe	check locally	rinse output pipe with 1" water connection
4	material bridging in screw compactor	check locally	remove material bridging with wooden rod

Screenings Compactor

6.4 No Rinse Water

Item	Possible cause	Fault analysis	Remedy
1	process water pump faulty	check locally	manufacturer, replacing pump
2	ball cock of supply line closed	check locally	open ball cock
3	pressure reducer blocked	check locally	dismantling and cleaning of pressure reducer
4	pressure reducer faulty	check locally	manufacturer, replacing pressure reducer
5	jets blocked	check locally	dismantling and cleaning the jets
6	“Y” Strainer Block	Check Strainer	Clean & Replace

7. Assembling and Disassembling Screenings Compactor

Brush Clamp / Round Brush

Before starting work on the screenings compactor, it must be switched off at the control cabinet and the emergency stop button at the local control point operated.

Before starting work on the wash compactor it must be cleaned with a high pressure cleaner.

Remove the hopper from the wash compactor.

Unscrew the bolts of the brush clamp and withdraw the brush clamp from the brush.

Reassemble the unit in the reverse order.

Screenings Compactor Drive Unit: SEW

Before starting work on the wash compactor it must be switched off at the control cabinet and the emergency stop button at the local control point operated.

Before starting work on the wash compactor it must be cleaned with a high pressure cleaner.

Secure the drive unit with a crane. Undo the screw at the shaft. Carefully withdraw the drive longitudinally from the shaft.

Reassemble the unit in the reverse order.

Self-Aligning Bearings

The bearings of the wash compactor are generously dimensioned and therefore require very little maintenance (see maintenance schedule).

Disassembly of the bearings should only be carried out by skilled personnel.

Contact Waste-Tech at 864-587-5712 for any questions about equipment.

8. Safety Precautions

Before starting work on the wash compactor, always operate EMERGENCY STOP BUTTON and set the controls at the control cabinet to OFF (0).

<u>NEVER</u> put your hand into the moving worm screw!

Please read these operating instructions carefully through before starting up and before carrying out any fitting or maintenance work!!!

- Live parts and rotating parts of electrical machinery can cause serious and fatal injuries!

– Make sure that you never start up damaged equipment

– Erection, connecting up, starting up, maintenance and repair work must only be carried out by qualified skilled staff, taking the following into account:

- these instructions
- all other commissioning instructions and circuit diagrams
- the current valid national/regional regulations (safety/accident)

– Confirm that the mains voltage agrees with the data on the nameplate

- Operation, maintenance and erection may only be carried out by the:

- person charged with the job
- person who has been trained for the job
- person who knows the regulations

- When working on electrical equipment, the power must be disconnected

- When working on the control cabinet, the power must be disconnected

- When working on the compactor, a sign must be clearly displayed to prevent the machine from being operated by unauthorised people.

- Safety instructions of individual manufacturers must be adhered to.

- Do not stand in dangerous areas

- Never put your hand into moving parts

- Defects must be remedied immediately and correctly

- Before starting up, the plant must be checked by a Waste Tech Technician/ Engineer.

- When working with different materials, attention must be paid to galvanic separation

- Inspection and maintenance intervals must be strictly adhered to

- To ensure correct operation, only use original accessories and spare parts,

- When working on parts which come into contact with the medium, protective gloves and protective goggles must be worn

- If you come into contact with the medium, the affected part must be sterilized immediately.

-Only use lifting gear which meets the requirements.

5.9

BAGGING UNIT

Longopac

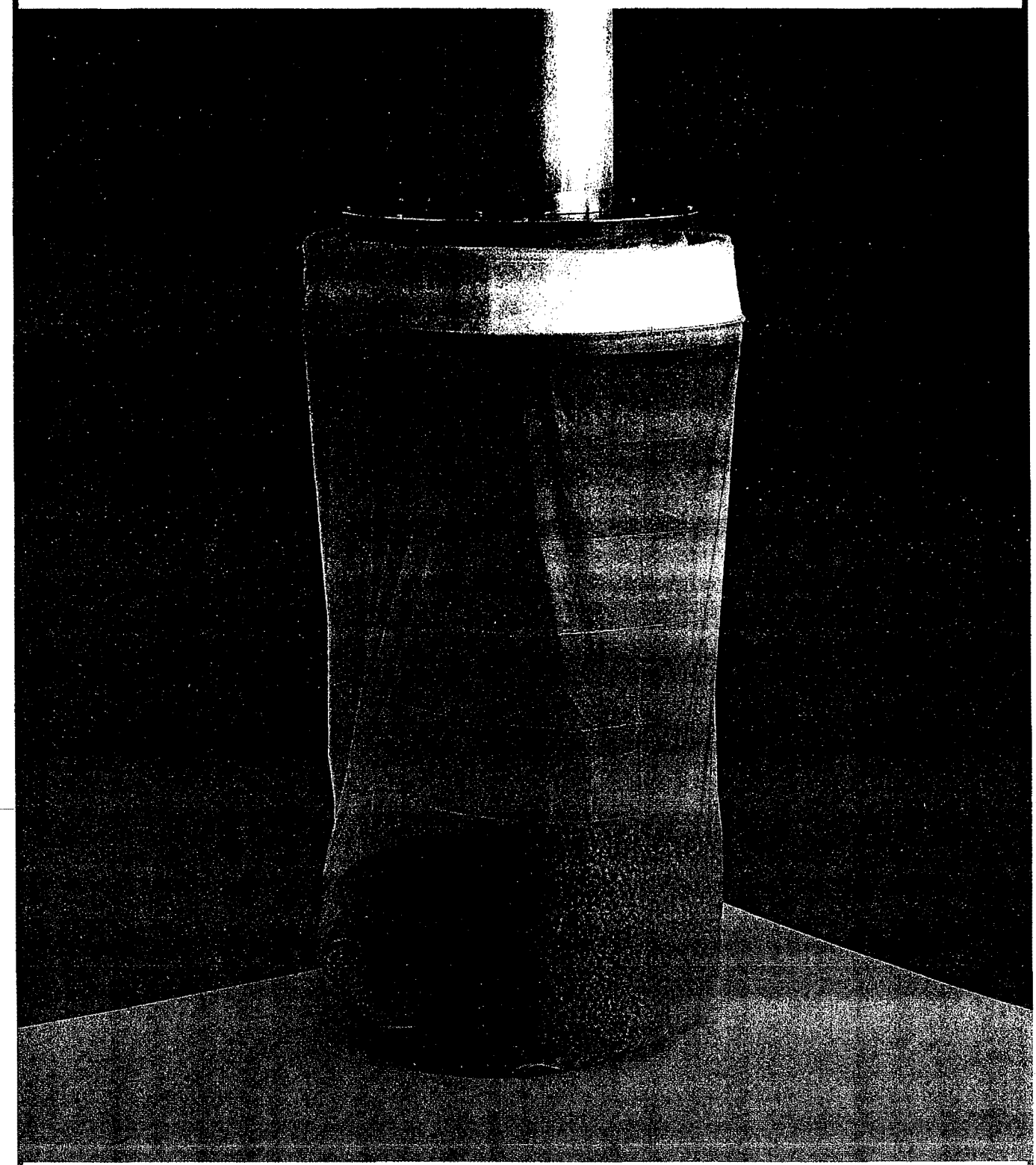

- an environmentally-friendly closed sack-system

Longopac

... is economical, practical, hygienic and environmentally-friendly!

Economical because the size of the sacks is determined by the size of the contents. Lots of refuse - large sacks, small amounts of refuse - small sacks.

Practical because each cassette contains 70 m (¿ 570 mm) of plastic hose. Which means that you don´t have to look for a new sack every time you change one.

Hygienic because the refuse comes directly into a closed system. There is no dust and your hands never need to come into contact with the refuse.

Environmentally compatible because the plastic material is made of environmentally-friendly, pure polyethylene.

... suits most pipes!

The cassette holder for Longopac´s closed sack-system is made with the following diameters:

160 mm	210 mm	260 mm
270 mm	300 mm	310 mm
327 mm	356 mm	380 mm

... is simple and easy to manage!

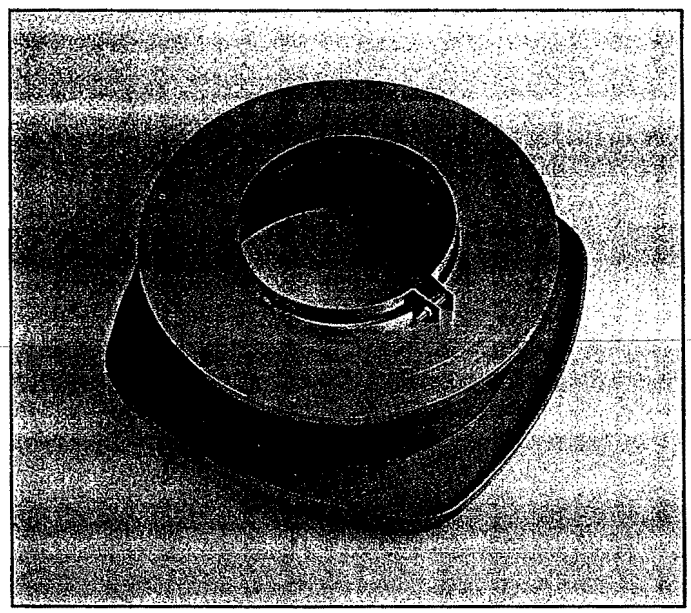

The cassette holder is made of stainless steel and rigid plastic.

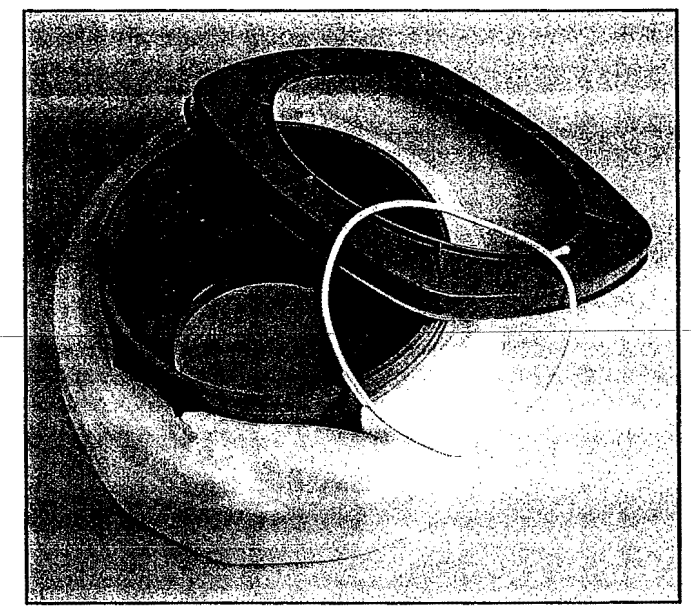

The cassette holder, upside down, with cassette inserted.

WASTE TECH INC

WASTE TECH INC

INSTRUCTIONS - CHANGING MAGAZINE

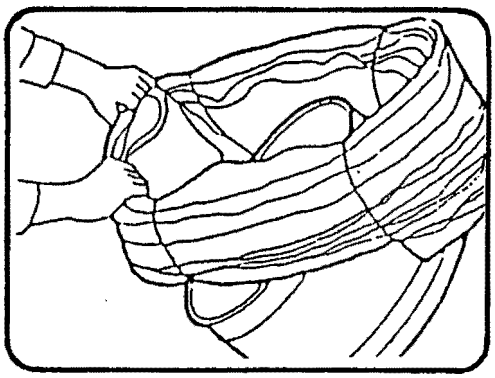

1.) Unfasten the o'ring and the plate.

2.) Draw the magazine onto the holder and press down carefully. Remove the strings.

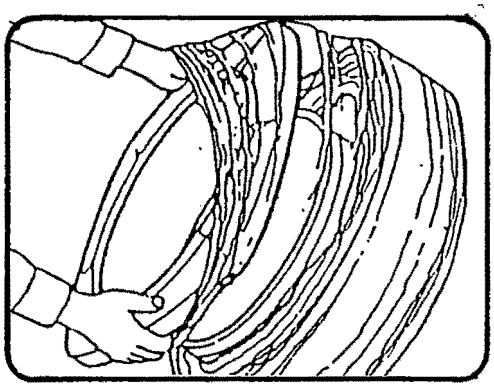

3.) Press on the plate while pulling out the outermost wrinkle of the magazine. Ensure that the plate is over and behind the slot on the holder.

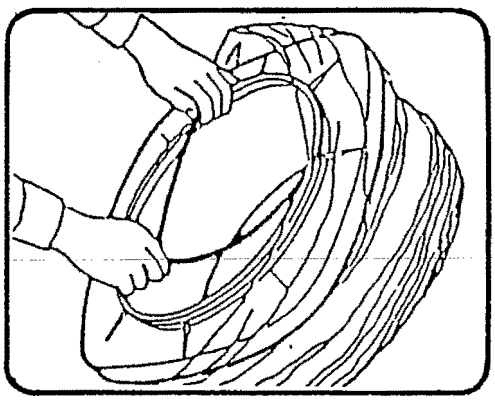

4.) Place the o'ring into the slot. IMPORTANT! The magazine must be positioned and held inside the plate.

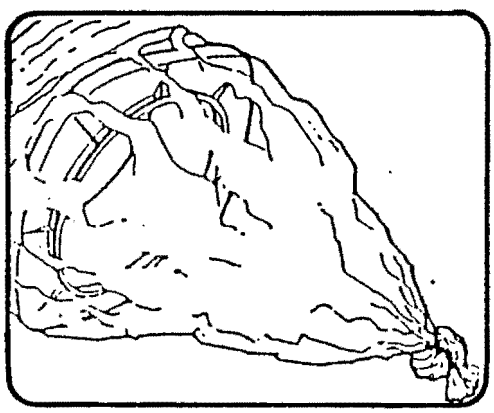

5.) Draw out a bag length and tie off the end with a knot. The first bag is ready.

Longofill 1

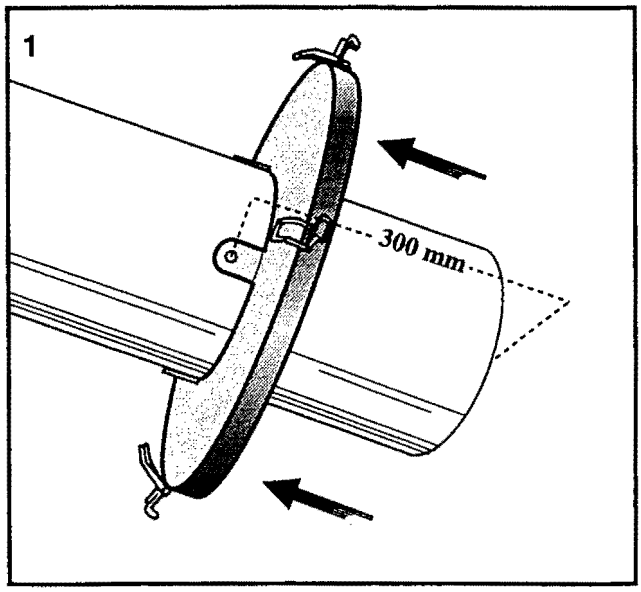

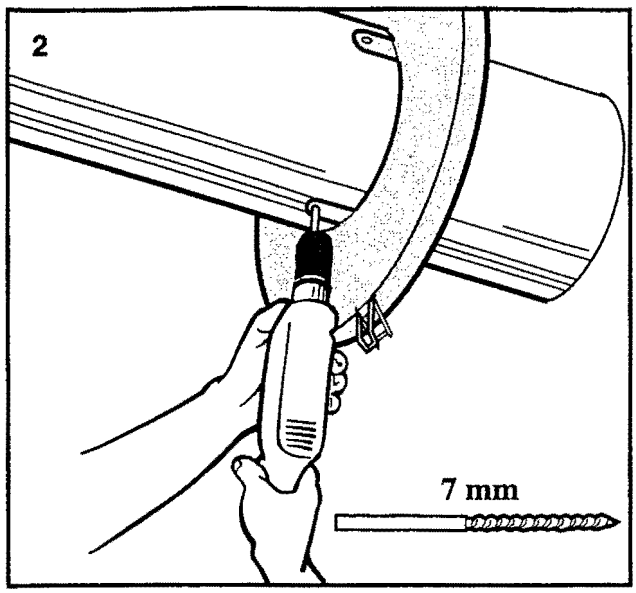

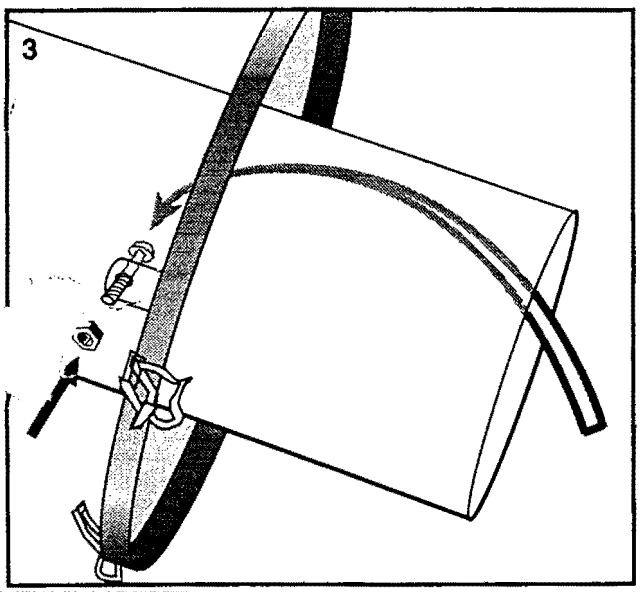

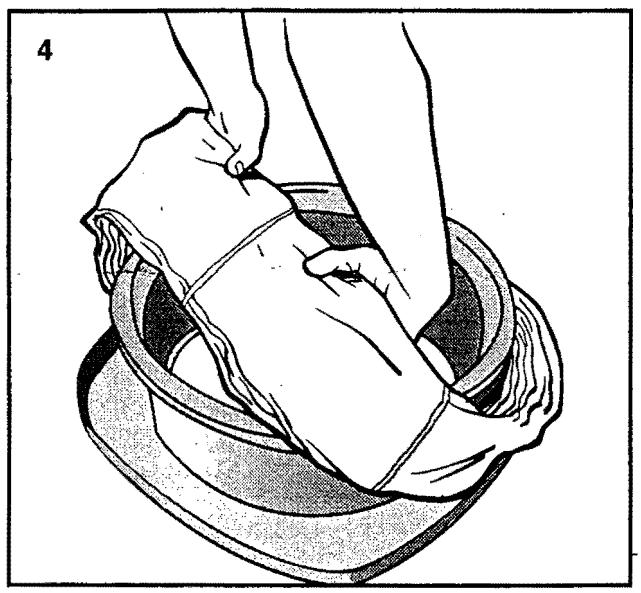

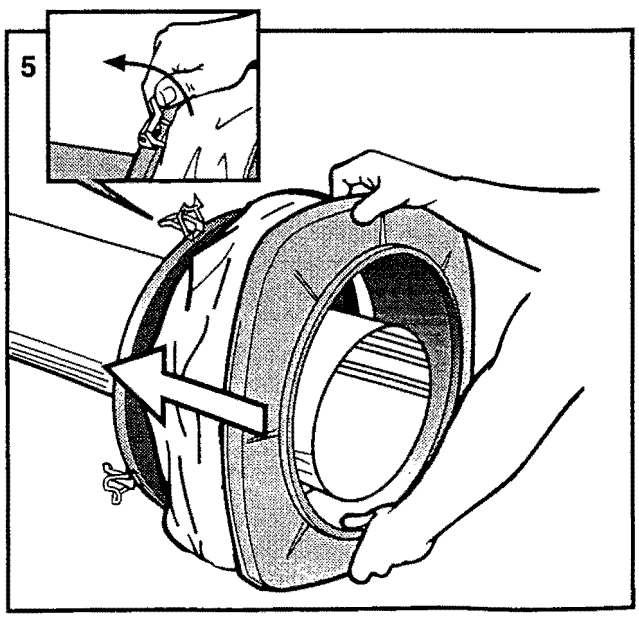

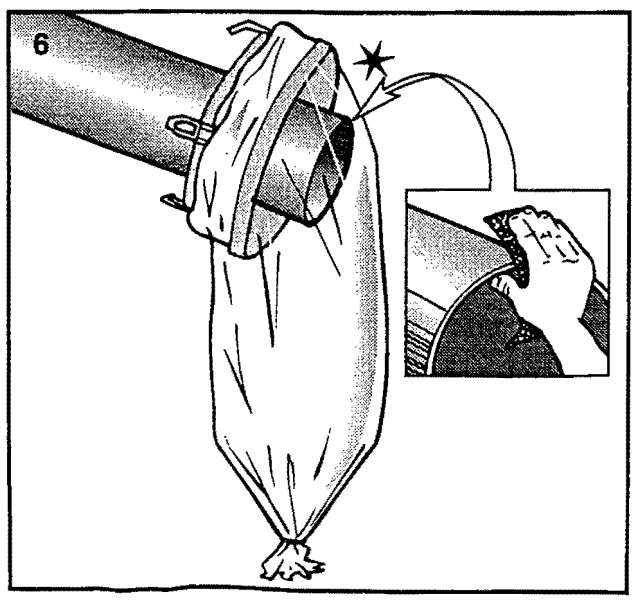

P.2072

Longofill 2

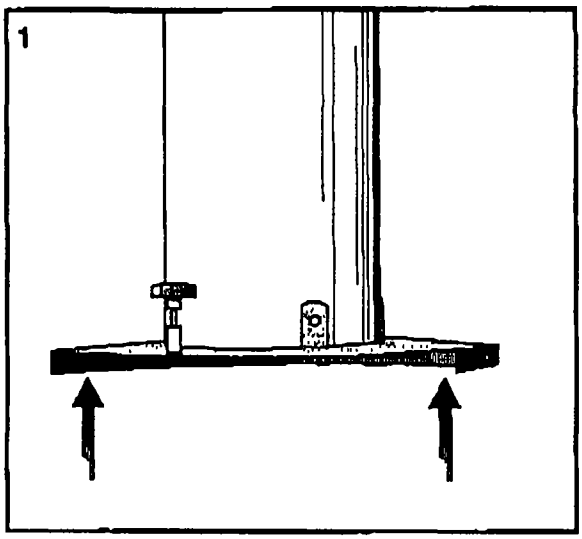

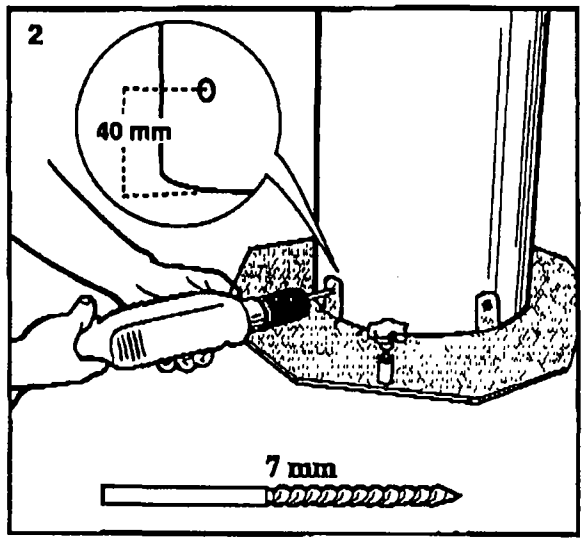

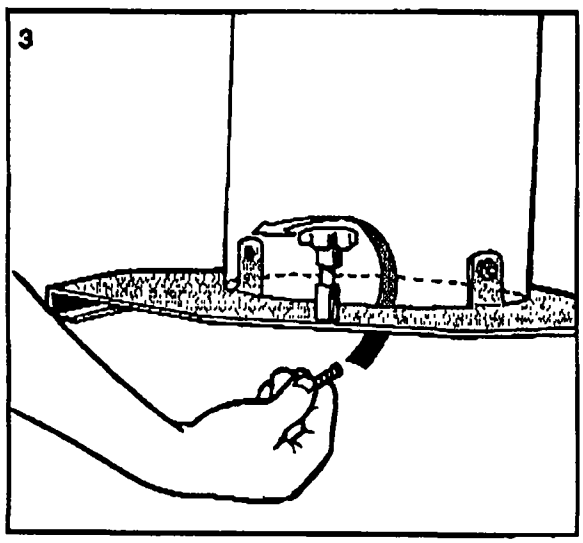

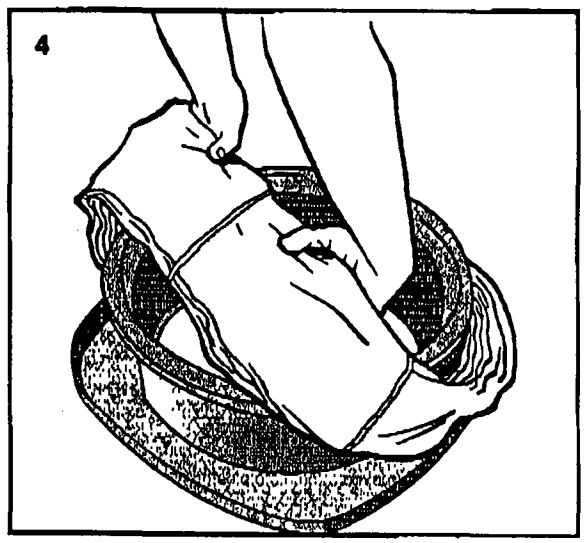

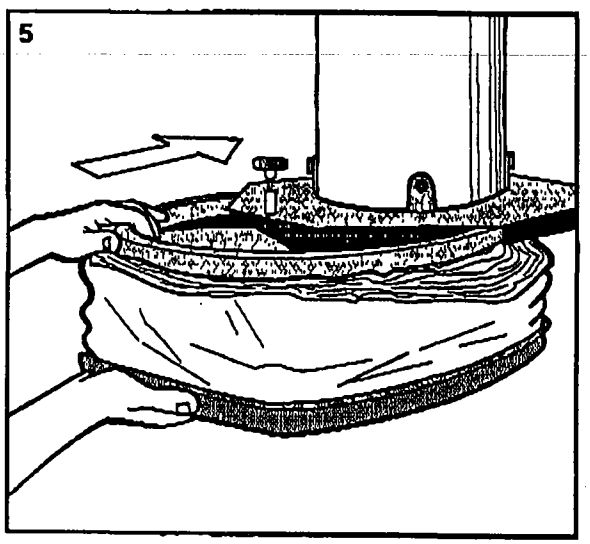

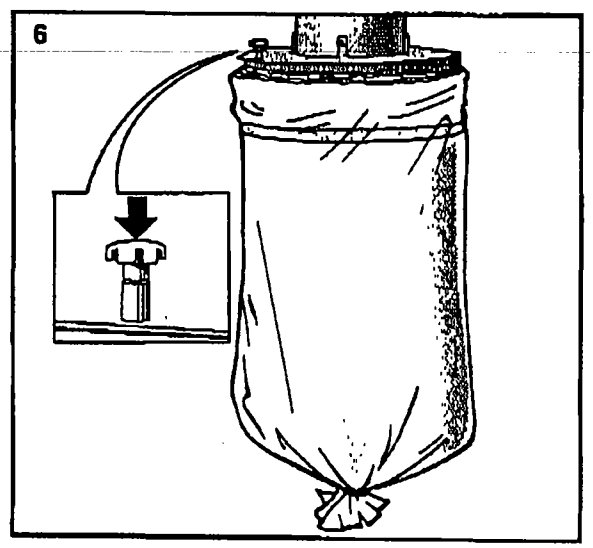

P.2073

WASTE-TECH
a division of KUSTERS ZIMA

SECTION 6

MAINTENANCE SUMMARY SHEETS & COMPONENT O & M MANUALS

WASTE-TECH
a division of KUSTERS ZIMA

6.1

MAINTENANCE SUMMARY SHEETS

EXHIBIT C1

Equipment Record

Equipment Data and Spare Parts Summary

Project Name: WENATCHEE WWTP IMPROVEMENTS PROJECT P0913	Specification Section: 11092
Equipment Name: MODEL WT/FRS 700x65/8 FILTERSCREEN	Year Installed: 2012
Project Equipment Tag No(s).: SCN12004B/WT SERIAL No.: 600.90/62	
Equipment Manufacturer: WASTE-TECH, A DIVISION OF KUSTERS ZIMA CORPORATION	Project/ Order No. WT56722
Address: 101 ZIMA PARK DRIVE, SPARTANBURG, SC 29301	Phone: (864) 576-0660
Fax: (864) 587-5761 / Web Site: www.kusterswater.com	E-mail: kzc@kustersizma.com
Local Vendor/Service Center: WASTE-TECH, A DIVISION OF KUSTERS ZIMA CORPORATION	
Address: 101 ZIMA PARK DRIVE, SPARTANBURG, SC 29301	Phone: (864) 576-0660
Fax: (864) 587-5761 / Web Site: www.kusterswater.com	E-mail: kzc@kustersizma.com

MECHANICAL NAMEPLATE DATA

Equip. GEAR REDUCER - SCREEN DRIVE 258.18:1			Serial No. 870245751.12.12.002	
Make SEW EURODRIVE			Model No. SA 87	
ID No.	Frame No. AM 182 ADAPTOR	HP	RPM 6.8	Cap.
Size 193 LBS	TDH	Imp. Sz.	CFM	PSI

Other: AGMA RATING: II; SF: 1.5; MOUNTING: C-FACE

ELECTRICAL NAMEPLATE DATA

Equip. MOTOR - SCREEN DRIVE					Serial No. DX3124315007			
Make TECO WESTINGHOUSE					Model No. EP0034C			
ID No.	Frame No. 182 TC	HP 3	V. 230-460 V	Amp. 3.89 A @ 460V	HZ 60	PH 3	RPM 1800	SF 1.15
Duty	Code B	Ins. Cl. F	Type TEFC	NEMA YES	C Amb.	Temp. Rise B	Rating	

Other: PREMIUM EFFICIENCY; CLASS 1, DIV 1; WINDING: B; WEIGHT: 100 LBS

SPARE PARTS PROVIDED PER CONTRACT

Part No.	Part Name	Quantity
	ROTATING BRUSH	1
	SET OF SIDE SEALS & CURVED SEALS	1
	BOTTOM BRUSH	1

RECOMMENDED SPARE PARTS

Part No.	Part Name	Quantity
	TOP SPROCKET TENSION FRAME BEARING & TOP SPROCKET (SPLIT TYPE)	2
	CHAIN	1
	MASTERLINK CONNECTION PIECES	4
	BRUSH SHAFT BEARING	2
	ROTATING BRUSH	1 SET
	BOTTOM SEAL SET (BRUSH, PLATE, RUBBER)	1
	BOTTOM SPROCKET	1
	GEAR REDUCER (ONE EACH FOR THE SCREEN, BRUSH, & ROLLER DRIVES)	3
	MOTOR (ONE EACH FOR THE SCREEN, BRUSH, & ROLLER DRIVES)	3

(Jun 1990; Revised Oct 2001, Revised Nov 2007)
Copyright 1991 HDR Engineering, Inc.

EXHIBIT C2

Equipment Record

Recommended Maintenance Summary

Equipment Description	Project Equip. Tag No(s).
MODEL WT/FRS 700x65/8 FILTERSCREEN	SCN12004B/WT SERIAL NO.: 600.90/62

RECOMMENDED BREAK-IN MAINTENANCE (FIRST OIL CHANGES, ETC.)	INITIAL COMPLETION * FOLLOWING START-UP						
	D	W	M	Q	S	A	Hours
Change oil after initial run in period (about 1 month)			X				

RECOMMENDED PREVENTIVE MAINTENANCE	PM TASK INTERVAL *						
	D	W	M	Q	S	A	Hours
Check oil level in gearboxes				X			
Change oil in gearboxes						X	10,000
Check motor bearings						X	12,000
Grease upper bearings				X			
Grease lower bearings		X					
Lubricate drive box links			X				
Check drive units for oil leaks	X						
Check equipment for universal noises	X						
Check for leaks around the housing		X					
Check that the screen chain is running smoothly		X					
Check for any visible damage	X						
Spray chains with chain lube			X				
Check water supply/check for correct water pressure (15gpm)	X						
Visual check compactor hopper for blockage	X						

* D = Daily W = Weekly M = Monthly Q = Quarterly S = Semiannual A = Annual Hours = Run Time Interval

(Jun 1990; Revised Oct 2001, Revised Nov 2007)

Copyright 1991 HDR Engineering, Inc.

EXHIBIT C3

Equipment Record

Lubrication Summary

Equipment Description	Project Equip. Tag No(s).
MODEL WT/FRS 700x65/8 FILTERSCREEN	SCN12004B/ WT SERIAL No.: 600.90/62

Lubricant Point GEARBOXES

Lubricant Type		Manufacturer	Product	AGMA #	SAE #	ISO
	1	MOBIL	MOBILGEAR 636	8	90	VG 680
	2					
	3					
	4					
	5					

Lubricant Point DRIVE BOX LINKS

Lubricant Type		Manufacturer	Product	AGMA #	SAE #	ISO
	1	ANY	MOLYBDENUM CHAIN LUBE	8	140	VG 680
	2					
	3					
	4					
	5					

Lubricant Point SCREEN LOWER BEARING

Lubricant Type		Manufacturer	Product	AGMA #	SAE #	ISO
	1	SHELL	RETINAX LX	8	140	VG 220
	2					
	3					
	4					
	5					

Lubricant Point UPPER BEARINGS

Lubricant Type		Manufacturer	Product	AGMA #	SAE #	ISO
	1	SHELL	RETINAX LX	8	140	VG 220
	2					
	3					
	4					
	5					

Lubricant Point

Lubricant Type		Manufacturer	Product	AGMA #	SAE #	ISO
	1					
	2					
	3					
	4					
	5					

Lubricant Point

Lubricant Type		Manufacturer	Product	AGMA #	SAE #	ISO
	1					
	2					
	3					
	4					
	5					

(Feb 1991; Revised Oct 2001, Revised Nov 2007)
Copyright 1991 HDR Engineering, Inc.

EXHIBIT C1

Equipment Record

Equipment Data and Spare Parts Summary

Project Name: WENATCHEE WWTP IMPROVEMENTS PROJECT P0913	Specification Section: 11092
Equipment Name: MODEL WT/FRS 700x65/8 FILTERSCREEN`	Year Installed: 2012
Project Equipment Tag No(s). SCN12004A/WT SERIAL No.: 600.90/62	
Equipment Manufacturer: WASTE-TECH, A DIVISION OF KUSTERS ZIMA CORPORATION	Project/ Order No. WT56722
Address: 101 ZIMA PARK DRIVE, SPARTANBURG, SC 29301	Phone: (864) 576-0660
Fax: (864) 587-5761 / Web Site: www.kusterswater.com	E-mail: kzc@kusterszima.com
Local Vendor/Service Center: WASTE-TECH, A DIVISION OF KUSTERS ZIMA CORPORATION	
Address: 101 ZIMA PARK DRIVE, SPARTANBURG, SC 29301	Phone: (864) 576-0660
Fax: (864) 587-5761 / Web Site: www.kusterswater.com	E-mail: kzc@kusterszima.com

MECHANICAL NAMEPLATE DATA

Equip. GEAR REDUCER - BRUSH DRIVE 12.96:1			Serial No. 870245755.12.12.001	
Make SEW EURODRIVE			Model No. SA 67	
ID No.	Frame No. AM145 ADAPTOR	HP	RPM 129	Cap.
Size 117 LBS	TDH	Imp. Sz.	CFM	PSI

Other: AGMA RATING: II

ELECTRICAL NAMEPLATE DATA

Equip. MOTOR - BRUSH DRIVE					Serial No. EX2125324017			
Make TECO WESTINGHOUSE					Model No. EP0024C			
ID No.	Frame No. 145 TC	HP 2	V. 230-460 V	Amp. 2.78A @ 460V	HZ 60	PH 3	RPM 1800	SF 1.15
Duty	Code C	Ins. Cl. F	Type TEFC	NEMA YES	C Amb.	Temp. Rise	Rating	

Other: PREMIUM EFFICIENCY; CLASS 1, DIV 1; WEIGHT: 65 LBS

SPARE PARTS PROVIDED PER CONTRACT

Part No.	Part Name	Quantity
	ROTATING BRUSH	1
	SET OF SIDE SEALS & CURVED SEALS	1
	BOTTOM BRUSH	1

RECOMMENDED SPARE PARTS

Part No.	Part Name	Quantity
	TOP SPROCKET TENSION FRAME BEARING & TOP SPROCKET (SPLIT STYLE)	2
	CHAIN	1
	MASTERLINK CONNECTION PIECES	4
	BRUSH SHAFT BEARING	2
	ROTATING BRUSH	1 SET
	BOTTOM SEAL SET (BRUSH, PLATE, RUBBER)	1
	BOTTOM SPROCKET	1
	GEAR REDUCER (ONE EACH FOR THE SCREEN, BRUSH, AND ROLLER DRIVES)	3
	MOTOR (ONE EACH FOR THE SCREEN, BRUSH, AND ROLLER DRIVES)	3

(Jun 1990; Revised Oct 2001, Revised Nov 2007)

Copyright 1991 HDR Engineering, Inc.

EXHIBIT C2

Equipment Record

Recommended Maintenance Summary

Equipment Description	Project Equip. Tag No(s).
MODEL WT/FRS 700x65/8 FILTERSCREEN	SCN12004A/WT SERIAL NO.: 600.90/62

RECOMMENDED BREAK-IN MAINTENANCE (FIRST OIL CHANGES, ETC.)	INITIAL COMPLETION * FOLLOWING START-UP						
	D	W	M	Q	S	A	Hours
Change oil after initial run in period (about 1 month)			X				

RECOMMENDED PREVENTIVE MAINTENANCE	PM TASK INTERVAL *						
	D	W	M	Q	S	A	Hours
Check oil level in gearboxes				X			
Change oil in gearboxes						X	10,000
Check motor bearings						X	12,000
Grease upper bearings				X			
Grease lower bearings		X					
Lubricate drive box links			X				
Check drive units for oil leaks	X						
Check equipment for universal noises	X						
Check for leaks around the housing		X					
Check that the screen chain is running smoothly		X					
Check for any visible damage	X						
Spray chains with chain lube			X				
Check water supply/check for correct water pressure (15gpm)	X						
Visual check compactor hopper for blockage	X						

* D = Daily W = Weekly M = Monthly Q = Quarterly S = Semiannual A = Annual Hours = Run Time Interval

(Jun 1990; Revised Oct 2001, Revised Nov 2007)
Copyright 1991 HDR Engineering, Inc.

EXHIBIT C3

Equipment Record

Lubrication Summary

Equipment Description	Project Equip. Tag No(s).
MODEL WT/FRS 700x65/8 FILTERSCREEN	SCN12004A/ WT SERIAL No.: 600.90/62

Lubricant Point GEARBOXES

Lubricant Type		Manufacturer	Product	AGMA #	SAE #	ISO
	1	MOBIL	MOBILGEAR 636	8	90	VG 680
	2					
	3					
	4					
	5					

Lubricant Point DRIVE BOX LINKS

Lubricant Type		Manufacturer	Product	AGMA #	SAE #	ISO
	1	ANY	MOLYBDENUM CHAIN LUBE	8	140	VG 680
	2					
	3					
	4					
	5					

Lubricant Point SCREEN LOWER BEARING

Lubricant Type		Manufacturer	Product	AGMA #	SAE #	ISO
	1	SHELL	RETINAX LX	8	140	VG 220
	2					
	3					
	4					
	5					

Lubricant Point UPPER BEARINGS

Lubricant Type		Manufacturer	Product	AGMA #	SAE #	ISO
	1	SHELL	RETINAX LX	8	140	VG 220
	2					
	3					
	4					
	5					

Lubricant Point

Lubricant Type		Manufacturer	Product	AGMA #	SAE #	ISO
	1					
	2					
	3					
	4					
	5					

Lubricant Point

Lubricant Type		Manufacturer	Product	AGMA #	SAE #	ISO
	1					
	2					
	3					
	4					
	5					

(Feb 1991; Revised Oct 2001, Revised Nov 2007)
Copyright 1991 HDR Engineering, Inc.

EXHIBIT C1

Equipment Record

Equipment Data and Spare Parts Summary

Project Name: WENATCHEE WWTP IMPROVEMENTS PROJECT P0913	Specification Section: 11092
Equipment Name: MODEL WT/FRS 700x65/8 FILTERSCREEN`	Year Installed: 2012
Project Equipment Tag No(s). SCN12004A/WT SERIAL No.: 600.90/62	
Equipment Manufacturer: WASTE-TECH, A DIVISION OF KUSTERS ZIMA CORPORATION	Project/ Order No. WT56722
Address: 101 ZIMA PARK DRIVE, SPARTANBURG, SC 29301	Phone: (864) 576-0660
Fax: (864) 587-5761 / Web Site: www.kusterswater.com	E-mail: kzc@kusterszima.com
Local Vendor/Service Center: WASTE-TECH, A DIVISION OF KUSTERS ZIMA CORPORATION	
Address: 101 ZIMA PARK DRIVE, SPARTANBURG, SC 29301	Phone: (864) 576-0660
Fax: (864) 587-5761 / Web Site: www.kusterswater.com	E-mail: kzc@kusterszima.com

MECHANICAL NAMEPLATE DATA

Equip. GEAR REDUCER - DEFLECTOR DRIVE 110.73:1			Serial No. 8702458758.12.12.002	
Make SEW EURODRIVE			Model No. SA 47	
ID No.	Frame No. AM56 ADAPTOR	HP	RPM 16	Cap.
Size 33 LBS	TDH	Imp. Sz.	CFM	PSI

Other: AGMA RATING: II; SF: 1.6

ELECTRICAL NAMEPLATE DATA

Equip. MOTOR - DEFLECTOR DRIVE					Serial No. F1206041382			
Make BALDOR RELIANCE					Model No. VEM3538			
ID No.	Frame No.	HP 1/2	V. 460v	Amp. 0.78a @ 460v	HZ 60	PH 3	RPM 1735	SF 1.25
Duty	Code B	Ins. Cl. F	Type TEFC	NEMA YES	C Amb.	Temp. Rise B	Rating	

Other: MOUNTING: C-FACE, DIRECT COUPLED; WEIGHT: 31 LBS

SPARE PARTS PROVIDED PER CONTRACT

Part No.	Part Name	Quantity
	ROTATING BRUSH	1
	SET OF SIDE SEALS & CURVED SEALS	1
	BOTTOM BRUSH	1

RECOMMENDED SPARE PARTS

Part No.	Part Name	Quantity
	TOP SPROCKET TENSION FRAME BEARING & TOP SPROCKET (SPLIT TYPE)	2
	CHAIN	1
	MASTERLINK CONNECTION PIECES	4
	BRUSH SHAFT BEARING	2
	ROTATING BRUSH	1 SET
	BOTTOM SEAL SET (BRUSH, SEAL, RUBBER)	1
	BOTTOM SPROCKET	1
	GEAR REDUCER (ONE EACH FOR THE SCEEN, BRUSH, AND ROLLER DRIVES)	3
	MOTOR (ONE EACH FOR THE SCREEN, BRUSH, AND ROLLER DRIVES)	3

(Jun 1990; Revised Oct 2001, Revised Nov 2007)
Copyright 1991 HDR Engineering, Inc.

EXHIBIT C2

Equipment Record

Recommended Maintenance Summary

Equipment Description	Project Equip. Tag No(s).
MODEL WT/FRS 700x65/8 FILTERSCREEN	SCN12004A/WT SERIAL NO.: 600.90/62

RECOMMENDED BREAK-IN MAINTENANCE (FIRST OIL CHANGES, ETC.)	INITIAL COMPLETION * FOLLOWING START-UP						
	D	W	M	Q	S	A	Hours
Change oil after initial run in period (about 1 month)			X				

RECOMMENDED PREVENTIVE MAINTENANCE	PM TASK INTERVAL *						
	D	W	M	Q	S	A	Hours
Check oil level in gearboxes				X			
Change oil in gearboxes						X	10,000
Check motor bearings						X	12,000
Grease upper bearings				X			
Grease lower bearings		X					
Lubricate drive box links			X				
Check drive units for oil leaks	X						
Check equipment for universal noises	X						
Check for leaks around the housing		X					
Check that the screen chain is running smoothly		X					
Check for any visible damage	X						
Spray chains with chain lube			X				
Check water supply/check for correct water pressure (15gpm)	X						
Visual check compactor hopper for blockage	X						

* D = Daily W = Weekly M = Monthly Q = Quarterly S = Semiannual A = Annual Hours = Run Time Interval

(Jun 1990; Revised Oct 2001, Revised Nov 2007)
Copyright 1991 HDR Engineering, Inc.

EXHIBIT C3

Equipment Record

Lubrication Summary

Equipment Description	Project Equip. Tag No(s).
MODEL WT/FRS 700x65/8 FILTERSCREEN	SCN12004A/ WT SERIAL No.: 600.90/62

Lubricant Point GEARBOXES

Lubricant Type		Manufacturer	Product	AGMA #	SAE #	ISO
	1	MOBIL	MOBILGEAR 636	8	90	VG 680
	2					
	3					
	4					
	5					

Lubricant Point DRIVE BOX LINKS

Lubricant Type		Manufacturer	Product	AGMA #	SAE #	ISO
	1	ANY	MOLYBDENUM CHAIN LUBE	8	140	VG 680
	2					
	3					
	4					
	5					

Lubricant Point SCREEN LOWER BEARING

Lubricant Type		Manufacturer	Product	AGMA #	SAE #	ISO
	1	SHELL	RETINAX LX	8	140	VG 220
	2					
	3					
	4					
	5					

Lubricant Point UPPER BEARINGS

Lubricant Type		Manufacturer	Product	AGMA #	SAE #	ISO
	1	SHELL	RETINAX LX	8	140	VG 220
	2					
	3					
	4					
	5					

Lubricant Point

Lubricant Type		Manufacturer	Product	AGMA #	SAE #	ISO
	1					
	2					
	3					
	4					
	5					

Lubricant Point

Lubricant Type		Manufacturer	Product	AGMA #	SAE #	ISO
	1					
	2					
	3					
	4					
	5					

(Feb 1991; Revised Oct 2001, Revised Nov 2007)
Copyright 1991 HDR Engineering, Inc.

EXHIBIT C1

Equipment Record

Equipment Data and Spare Parts Summary

Project Name: WENATCHEE WWTP IMPROVEMENTS PROJECT P0913	Specification Section: 11092
Equipment Name: MODEL WT/FRS 700x65/8 FILTERSCREEN`	Year Installed: 2012
Project Equipment Tag No(s). SCN12004B/WT SERIAL No.: 600.90/63	
Equipment Manufacturer: WASTE-TECH, A DIVISION OF KUSTERS ZIMA CORPORATION	Project/ Order No. WT56722
Address: 101 ZIMA PARK DRIVE, SPARTANBURG, SC 29301	Phone: (864) 576-0660
Fax: (864) 587-5761 / Web Site: www.kusterswater.com	E-mail: kzc@kusterszima.com
Local Vendor/Service Center: WASTE-TECH, A DIVISION OF KUSTERS ZIMA CORPORATION	
Address: 101 ZIMA PARK DRIVE, SPARTANBURG, SC 29301	Phone: (864) 576-0660
Fax: (864) 587-5761 / Web Site: www.kusterswater.com	E-mail: kzc@kusterszima.com

MECHANICAL NAMEPLATE DATA

Equip. GEAR REDUCER - SCREEN DRIVE 258.18:1			Serial No. 870245751.12.12.002	
Make SEW EURODRIVE			Model No. SA 87	
ID No.	Frame No. AM 182 ADAPTOR	HP	RPM 6.8	Cap.
Size 193 LBS	TDH	Imp. Sz.	CFM	PSI

Other: AGMA RATING: II; SF: 1.5; MOUNTING: C-FACE

ELECTRICAL NAMEPLATE DATA

Equip. MOTOR - SCREEN DRIVE					Serial No. DX3124315007			
Make TECO WESTINGHOUSE					Model No. EP0034C			
ID No.	Frame No. 182 TC	HP 3	V. 230-460 V	Amp. 3.89 A @ 460V	HZ 60	PH 3	RPM 1800	SF 1.15
Duty	Code B	Ins. Cl. F	Type TEFC	NEMA YES	C Amb.	Temp. Rise B	Rating	

Other: PREMIUM EFFICIENCY; CLASS 1, DIV 1; WINDING: B; WEIGHT: 100 LBS

SPARE PARTS PROVIDED PER CONTRACT

Part No.	Part Name	Quantity
	ROTATING BRUSH	1
	SET OF SIDE SEALS & CURVED SEALS	1
	BOTTOM BRUSH	1

RECOMMENDED SPARE PARTS

Part No.	Part Name	Quantity
	TOP SPROCKET TENSION FRAME BEARING AND TOP SPROCKET (SPLIT STYLE)	2
	CHAIN	1
	MASTERLINK CONNECTION PIECES	4
	BRUSH SHAFT BEARING	2
	ROTATING BRUSH	1SET
	BOTTOM SEAL SET (BRUSH, PLATE, RUBBER)	1
	BOTTOM SPROCKET	1
	GEAR REDUCER (ONE EACH FOR THE SCREEN, BRUSH, AND ROLLER DRIVES)	3
	MOTOR (ONE EACH FOR THE SCREEN, BRUSH, AND ROLLER DRIVES)	3

(Jun 1990; Revised Oct 2001, Revised Nov 2007)

Copyright 1991 HDR Engineering, Inc.

EXHIBIT C2

Equipment Record

Recommended Maintenance Summary

Equipment Description	Project Equip. Tag No(s).
MODEL WT/FRS 700x65/8 FILTERSCREEN	SCN12004B/WT SERIAL NO.: 600.90/63

RECOMMENDED BREAK-IN MAINTENANCE (FIRST OIL CHANGES, ETC.)	INITIAL COMPLETION * FOLLOWING START-UP						
	D	W	M	Q	S	A	Hours
Change oil after initial run in period (about 1 month)			X				

RECOMMENDED PREVENTIVE MAINTENANCE	PM TASK INTERVAL *						
	D	W	M	Q	S	A	Hours
Check oil level in gearboxes				X			
Change oil in gearboxes						X	10,000
Check motor bearings						X	12,000
Grease upper bearings				X			
Grease lower bearings		X					
Lubricate drive box links			X				
Check drive units for oil leaks	X						
Check equipment for universal noises	X						
Check for leaks around the housing		X					
Check that the screen chain is running smoothly		X					
Check for any visible damage	X						
Spray chains with chain lube			X				
Check water supply/check for correct water pressure (15gpm)	X						
Visual check compactor hopper for blockage	X						

* D = Daily W = Weekly M = Monthly Q = Quarterly S = Semiannual A = Annual Hours = Run Time Interval

(Jun 1990; Revised Oct 2001, Revised Nov 2007)

Copyright 1991 HDR Engineering, Inc.

EXHIBIT C3

Equipment Record

Lubrication Summary

Equipment Description	Project Equip. Tag No(s).
MODEL WT/FRS 700x65/8 FILTERSCREEN	SCN12004B/ WT SERIAL No.: 600.90/63

Lubricant Point GEARBOXES

Lubricant Type		Manufacturer	Product	AGMA #	SAE #	ISO
	1	MOBIL	MOBILGEAR 636	8	90	VG 680
	2					
	3					
	4					
	5					

Lubricant Point DRIVE BOX LINKS

Lubricant Type		Manufacturer	Product	AGMA #	SAE #	ISO
	1	ANY	MOLYBDENUM CHAIN LUBE	8	140	VG 680
	2					
	3					
	4					
	5					

Lubricant Point SCREEN LOWER BEARING

Lubricant Type		Manufacturer	Product	AGMA #	SAE #	ISO
	1	SHELL	RETINAX LX	8	140	VG 220
	2					
	3					
	4					
	5					

Lubricant Point UPPER BEARINGS

Lubricant Type		Manufacturer	Product	AGMA #	SAE #	ISO
	1	SHELL	RETINAX LX	8	140	VG 220
	2					
	3					
	4					
	5					

Lubricant Point

Lubricant Type		Manufacturer	Product	AGMA #	SAE #	ISO
	1					
	2					
	3					
	4					
	5					

Lubricant Point

Lubricant Type		Manufacturer	Product	AGMA #	SAE #	ISO
	1					
	2					
	3					
	4					
	5					

(Feb 1991; Revised Oct 2001, Revised Nov 2007)
Copyright 1991 HDR Engineering, Inc.

EXHIBIT C1

Equipment Record

Equipment Data and Spare Parts Summary

Project Name: WENATCHEE WWTP IMPROVEMENTS PROJECT P0913	Specification Section: 11092
Equipment Name: MODEL WT/FRS 700x65/8 FILTERSCREEN`	Year Installed: 2012
Project Equipment Tag No(s).: SCN12004B/WT SERIAL No.: 600.90/63	
Equipment Manufacturer: WASTE-TECH, A DIVISION OF KUSTERS ZIMA CORPORATION	Project/ Order No. WT56722
Address: 101 ZIMA PARK DRIVE, SPARTANBURG, SC 29301	Phone: (864) 576-0660
Fax: (864) 587-5761 / Web Site: www.kusterswater.com	E-mail: kzc@kusterszima.com
Local Vendor/Service Center: WASTE-TECH, A DIVISION OF KUSTERS ZIMA CORPORATION	
Address: 101 ZIMA PARK DRIVE, SPARTANBURG, SC 29301	Phone: (864) 576-0660
Fax: (864) 587-5761 / Web Site: www.kusterswater.com	E-mail: kzc@kusterszima.com

MECHANICAL NAMEPLATE DATA

Equip. GEAR REDUCER - BRUSH DRIVE 12.96:1			Serial No. 870245755.12.12.002	
Make SEW EURODRIVE			Model No. SA 67	
ID No.	Frame No. AM145 ADAPTOR	HP	RPM 129	Cap.
Size 117 LBS	TDH	Imp. Sz.	CFM	PSI

Other: AGMA RATING: II

ELECTRICAL NAMEPLATE DATA

Equip. MOTOR - BRUSH DRIVE					Serial No. EX2125324018			
Make TECO WESTINGHOUSE					Model No. EP0024C			
ID No.	Frame No. 145 TC	HP 2	V. 230-460 V	Amp. 2.78A @ 460V	HZ 60	PH 3	RPM 1800	SF 1.15
Duty	Code C	Ins. Cl. F	Type TEFC	NEMA YES	C Amb.	Temp. Rise	Rating	

Other: PREMIUM EFFICIENCY; CLASS 1, DIV 1; WEIGHT: 65 LBS

SPARE PARTS PROVIDED PER CONTRACT

Part No.	Part Name	Quantity
	ROTATING BRUSH	1
	SET OF SIDE SEALS & CURVED SEALS	1
	BOTTOM BRUSH	1

RECOMMENDED SPARE PARTS

Part No.	Part Name	Quantity
	TOP SPROCKET TENSION FRAME BEARING & TOP SPROCKET (SPLIT STYLE)	2
	CHAIN	1
	MASTERLINK CONNECTION PIECES	4
	BRUSH SHAFT BEARING	2
	ROTATING BRUSH	1 SET
	BOTTOM SEAL SET (BRUSH, PLATE, RUBBER)	1
	BOTTOM SPROCKET	1
	GEAR REDUCER (ONE EACH FOR THE SCREEN, BRUSH, AND ROLLER DRIVES)	3
	MOTOR (ONE EACH FOR THE SCREEN, BRUSH, AND ROLLER DRIVES)	3

(Jun 1990; Revised Oct 2001, Revised Nov 2007)

Copyright 1991 HDR Engineering, Inc.

EXHIBIT C2

Equipment Record

Recommended Maintenance Summary

Equipment Description	Project Equip. Tag No(s).
MODEL WT/FRS 700x65/8 FILTERSCREEN	SCN12004B/WT SERIAL NO.: 600.90/63

RECOMMENDED BREAK-IN MAINTENANCE (FIRST OIL CHANGES, ETC.)	INITIAL COMPLETION * FOLLOWING START-UP						
	D	W	M	Q	S	A	Hours
Change oil after initial run in period (about 1 month)			X				

RECOMMENDED PREVENTIVE MAINTENANCE	PM TASK INTERVAL *						
	D	W	M	Q	S	A	Hours
Check oil level in gearboxes				X			
Change oil in gearboxes						X	10,000
Check motor bearings						X	12,000
Grease upper bearings				X			
Grease lower bearings		X					
Lubricate drive box links			X				
Check drive units for oil leaks	X						
Check equipment for universal noises	X						
Check for leaks around the housing		X					
Check that the screen chain is running smoothly		X					
Check for any visible damage	X						
Spray chains with chain lube			X				
Check water supply/check for correct water pressure (15gpm)	X						
Visual check compactor hopper for blockage	X						

* D = Daily W = Weekly M = Monthly Q = Quarterly S = Semiannual A = Annual Hours = Run Time Interval

(Jun 1990; Revised Oct 2001, Revised Nov 2007)

Copyright 1991 HDR Engineering, Inc.

EXHIBIT C3

Equipment Record

Lubrication Summary

Equipment Description	Project Equip. Tag No(s).
MODEL WT/FRS 700x65/8 FILTERSCREEN	SCN12004B/ WT SERIAL No.: 600.90/63

Lubricant Point GEARBOXES

Lubricant Type		Manufacturer	Product	AGMA #	SAE #	ISO
	1	MOBIL	MOBILGEAR 636	8	90	VG 680
	2					
	3					
	4					
	5					

Lubricant Point DRIVE BOX LINKS

Lubricant Type		Manufacturer	Product	AGMA #	SAE #	ISO
	1	ANY	MOLYBDENUM CHAIN LUBE	8	140	VG 680
	2					
	3					
	4					
	5					

Lubricant Point SCREEN LOWER BEARING

Lubricant Type		Manufacturer	Product	AGMA #	SAE #	ISO
	1	SHELL	RETINAX LX	8	140	VG 220
	2					
	3					
	4					
	5					

Lubricant Point UPPER BEARINGS

Lubricant Type		Manufacturer	Product	AGMA #	SAE #	ISO
	1	SHELL	RETINAX LX	8	140	VG 220
	2					
	3					
	4					
	5					

Lubricant Point

Lubricant Type		Manufacturer	Product	AGMA #	SAE #	ISO
	1					
	2					
	3					
	4					
	5					

Lubricant Point

Lubricant Type		Manufacturer	Product	AGMA #	SAE #	ISO
	1					
	2					
	3					
	4					
	5					

(Feb 1991; Revised Oct 2001, Revised Nov 2007)
Copyright 1991 HDR Engineering, Inc.

EXHIBIT C1

Equipment Record

Equipment Data and Spare Parts Summary

Project Name: WENATCHEE WWTP IMPROVEMENTS PROJECT P0913	Specification Section: 11092
Equipment Name: MODEL WT/FRS 700x65/8 FILTERSCREEN	Year Installed: 2012
Project Equipment Tag No(s).: SCN12004B/WT SERIAL No.: 600.90/63	
Equipment Manufacturer: WASTE-TECH, A DIVISION OF KUSTERS ZIMA CORPORATION	Project/ Order No. WT56722
Address: 101 ZIMA PARK DRIVE, SPARTANBURG, SC 29301	Phone: (864) 576-0660
Fax: (864) 587-5761 / Web Site: www.kusterswater.com	E-mail: kzc@kusterszima.com
Local Vendor/Service Center: WASTE-TECH, A DIVISION OF KUSTERS ZIMA CORPORATION	
Address: 101 ZIMA PARK DRIVE, SPARTANBURG, SC 29301	Phone: (864) 576-0660
Fax: (864) 587-5761 / Web Site: www.kusterswater.com	E-mail: kzc@kusterszima.com

MECHANICAL NAMEPLATE DATA

Equip. GEAR REDUCER - DEFLECTOR DRIVE 110.73:1			Serial No. 870245758.12.12.001	
Make SEW EURODRIVE			Model No. SA 47	
ID No.	Frame No. AM56 ADAPTOR	HP	RPM 16	Cap.
Size 33 LBS	TDH	Imp. Sz.	CFM	PSI
Other: AGMA RATING: II; SF: 1.6				

ELECTRICAL NAMEPLATE DATA

Equip. MOTOR - DEFLECTOR DRIVE					Serial No. F1206041362			
Make BALDOR RELIANCE					Model No. VEM3538			
ID No.	Frame No.	HP 1/2	V. 460v	Amp. 0.78a @ 460v	HZ 60	PH 3	RPM 1735	SF 1.25
Duty	Code B	Ins. Cl. F	Type TEFC	NEMA YES	C Amb.	Temp. Rise B	Rating	
Other: MOUNTING: C-FACE, DIRECT COUPLED; WEIGHT: 31 LBS								

SPARE PARTS PROVIDED PER CONTRACT

Part No.	Part Name	Quantity
	ROTATING BRUSH	1
	SET OF SIDE SEALS & CURVED SEALS	1
	BOTTOM BRUSH	1

RECOMMENDED SPARE PARTS

Part No.	Part Name	Quantity
	TOP SPROCKET TENSION FRAME BEARING & TOP SPROCKET (SPLIT STYLE)	2
	CHAIN	1
	MASTERLINK CONNECTION PIECES	4
	BRUSH SHAFT BEARING	2
	ROTATING BRUSH	1 SET
	BOTTOM SEAL SET (BRUSH, PLATE, RUBBER)	1
	BOTTOM SPROCKET	1
	GEAR REDUCER (ONE EACH FOR THE SCREEN, BRUSH, AND ROLLER DRIVES)	3
	MOTOR (ONE EACH FOR THE SCREEN, BRUSH, AND ROLLER DRIVES)	3

(Jun 1990; Revised Oct 2001, Revised Nov 2007)
Copyright 1991 HDR Engineering, Inc.

EXHIBIT C2

Equipment Record

Recommended Maintenance Summary

Equipment Description	Project Equip. Tag No(s).
MODEL WT/FRS 700x65/8 FILTERSCREEN	SCN12004B/WT SERIAL NO.: 600.90/63

RECOMMENDED BREAK-IN MAINTENANCE (FIRST OIL CHANGES, ETC.)	INITIAL COMPLETION * FOLLOWING START-UP						
	D	W	M	Q	S	A	Hours
Change oil after initial run in period (about 1 month)			X				

RECOMMENDED PREVENTIVE MAINTENANCE	PM TASK INTERVAL *						
	D	W	M	Q	S	A	Hours
Check oil level in gearboxes				X			
Change oil in gearboxes						X	10,000
Check motor bearings						X	12,000
Grease upper bearings				X			
Grease lower bearings		X					
Lubricate drive box links			X				
Check drive units for oil leaks	X						
Check equipment for universal noises	X						
Check for leaks around the housing		X					
Check that the screen chain is running smoothly		X					
Check for any visible damage	X						
Spray chains with chain lube			X				
Check water supply/check for correct water pressure (15gpm)	X						
Visual check compactor hopper for blockage	X						

* D = Daily W = Weekly M = Monthly Q = Quarterly S = Semiannual A = Annual Hours = Run Time Interval

(Jun 1990; Revised Oct 2001, Revised Nov 2007)

Copyright 1991 HDR Engineering, Inc.

EXHIBIT C3

Equipment Record

Lubrication Summary

Equipment Description	Project Equip. Tag No(s).
MODEL WT/FRS 700x65/8 FILTERSCREEN	SCN12004B/ WT SERIAL No.: 600.90/63

Lubricant Point GEARBOXES

Lubricant Type		Manufacturer	Product	AGMA #	SAE #	ISO
	1	MOBIL	MOBILGEAR 636	8	90	VG 680
	2					
	3					
	4					
	5					

Lubricant Point DRIVE BOX LINKS

Lubricant Type		Manufacturer	Product	AGMA #	SAE #	ISO
	1	ANY	MOLYBDENUM CHAIN LUBE	8	140	VG 680
	2					
	3					
	4					
	5					

Lubricant Point SCREEN LOWER BEARING

Lubricant Type		Manufacturer	Product	AGMA #	SAE #	ISO
	1	SHELL	RETINAX LX	8	140	VG 220
	2					
	3					
	4					
	5					

Lubricant Point UPPER BEARINGS

Lubricant Type		Manufacturer	Product	AGMA #	SAE #	ISO
	1	SHELL	RETINAX LX	8	140	VG 220
	2					
	3					
	4					
	5					

Lubricant Point

Lubricant Type		Manufacturer	Product	AGMA #	SAE #	ISO
	1					
	2					
	3					
	4					
	5					

Lubricant Point

Lubricant Type		Manufacturer	Product	AGMA #	SAE #	ISO
	1					
	2					
	3					
	4					
	5					

(Feb 1991; Revised Oct 2001, Revised Nov 2007)
Copyright 1991 HDR Engineering, Inc.

EXHIBIT C1

Equipment Record

Equipment Data and Spare Parts Summary

Project Name: WENATCHEE WWTP IMPROVEMENTS PROJECT P0913	Specification Section: 11095
Equipment Name: MODEL WT/FSM SPW 200 WASHER/COMPACTOR w/ AGITATOR	Year Installed: 2012
Project Equipment Tag No(s).: WHR-12007A/WT SERIAL No.: 615.20/63	
Equipment Manufacturer: WASTE-TECH, A DIVISION OF KUSTERS ZIMA CORPORATION	Project/ Order No. WT56722
Address: 101 ZIMA PARK DRIVE, SPARTANBURG, SC 29301	Phone: (864) 576-0660
Fax: (864) 587-5761 / Web Site: www.kusterswater.com	E-mail: kzc@kusterszima.com
Local Vendor/Service Center: WASTE-TECH, A DIVISION OF KUSTERS ZIMA CORPORATION	
Address: 101 ZIMA PARK DRIVE, SPARTANBURG, SC 29301	Phone: (864) 576-0660
Fax: (864) 587-5761 / Web Site: www.kusterswater.com	E-mail: kzc@kusterszima.com

MECHANICAL NAMEPLATE DATA

Equip. GEAR REDUCER - COMPACTOR DRIVE 228.93:1			Serial No. 01.1812101.0001.12	
Make SEW EURODRIVE			Model No. FAF 87	
ID No.	Frame No. AM 145 ADAPTOR	HP	RPM 8	Cap.
Size 267 LBS	TDH	Imp. Sz.	CFM	PSI

Other: SF: 1.5; MOUNTING: C-FACE

ELECTRICAL NAMEPLATE DATA

Equip. MOTOR - COMPACTOR DRIVE					Serial No. DX3124323006			
Make TECO WESTINGHOUSE					Model No. EP0034C			
ID No.	Frame No. 145 TC	HP 3	V. 230-460 V	Amp. 3.74 A @ 460V	HZ 60	PH 3	RPM 1800	SF 1.15
Duty	Code B	Ins. Cl. F	Type TEFC	NEMA YES	C Amb. 40 C	Temp. Rise	Rating	

Other:

SPARE PARTS PROVIDED PER CONTRACT

Part No.	Part Name	Quantity
	WASHWATER SOLENOID VALVES OF EACH SIZE	2
	BRUSH CLIPS	12
	SETS OF BRUSHES	2
	SPARE BULBS FOR CONTROL PANEL INDICATING LIGHTS	6
	SET OF FUSES	1
	SETS OF BAGGING HOSE	5

RECOMMENDED SPARE PARTS

Part No.	Part Name	Quantity
	SELF ALIGNING ROLLER BEARING	1
	RADIAL SHAFT SEAL	1
	V-RING SEAL	1
	O-RING	1
	BRUSH WITH RETAINING CLIP	1
	SCREW AUGER	1
	WEAR BARS WITH HARDWARE	1
	AGITATOR MOTOR	1
	LEVEL SENSOR	1

(Jun 1990; Revised Oct 2001, Revised Nov 2007)

Copyright 1991 HDR Engineering, Inc.

EXHIBIT C2

Equipment Record

Recommended Maintenance Summary

Equipment Description	Project Equip. Tag No(s).
MODEL WT/FSM SPW 200 WASHER COMPACTOR w/ AGITATOR	WHR-12007A/WT SERIAL No.: 615.20/63

RECOMMENDED BREAK-IN MAINTENANCE (FIRST OIL CHANGES, ETC.)	INITIAL COMPLETION * FOLLOWING START-UP						
	D	W	M	Q	S	A	Hours
Change oil after initial run in period (about 1 month)			X				
Lubricating the bearings		X					

RECOMMENDED PREVENTIVE MAINTENANCE	PM TASK INTERVAL *						
	D	W	M	Q	S	A	Hours
Check oil level in gearboxes				X			
Change oil in gearboxes						X	10,000
Check motor bearings						X	12,000
Grease bearings			X				
Check drive units for oil leaks	X						
Check equipment for unusual noises	X						
Check for leaks around the housing		X					
Tighten wearing strips				X			
Check for any visible damage		X					
Resetting Brush				X			
Remove & clean jets					X		
High pressure spray cleaning of exterior				X			
Check all fasteners for tightness		X					

* D = Daily W = Weekly M = Monthly Q = Quarterly S = Semiannual A = Annual Hours = Run Time Interval

(Jun 1990; Revised Oct 2001, Revised Nov 2007)

Copyright 1991 HDR Engineering, Inc.

EXHIBIT C3

Equipment Record

Lubrication Summary

Equipment Description	Project Equip. Tag No(s).
MODEL WT/FSM SPW 200 WASHER/COMPACTOR w/AGITATOR	WHR-12007A/WT SERIAL No.: 615.20/63

Lubricant Point GEARBOXES

Lubricant Type	Manufacturer	Product	AGMA #	SAE #	ISO
1	MOBIL	MOBILGEAR 680	8	140	VG 680
2					
3					
4					
5					

Lubricant Point BEARINGS

Lubricant Type	Manufacturer	Product	AGMA #	SAE #	ISO
1	SHELL	RETINAX LX	8	140	VG 220
2					
3					
4					
5					

Lubricant Point

Lubricant Type	Manufacturer	Product	AGMA #	SAE #	ISO
1					
2					
3					
4					
5					

Lubricant Point

Lubricant Type	Manufacturer	Product	AGMA #	SAE #	ISO
1					
2					
3					
4					
5					

Lubricant Point

Lubricant Type	Manufacturer	Product	AGMA #	SAE #	ISO
1					
2					
3					
4					
5					

Lubricant Point

Lubricant Type	Manufacturer	Product	AGMA #	SAE #	ISO
1					
2					
3					
4					
5					

(Feb 1991; Revised Oct 2001, Revised Nov 2007)
Copyright 1991 HDR Engineering, Inc.

EXHIBIT C1

Equipment Record

Equipment Data and Spare Parts Summary

Project Name: WENATCHEE WWTP IMPROVEMENTS PROJECT P0913	Specification Section: 11095
Equipment Name: MODEL WT/FSM SPW 200 WASHER/COMPACTOR w/ AGITATOR	Year Installed: 2012
Project Equipment Tag No(s).: WHR-12007B/WT SERIAL No.: 615.20/64	
Equipment Manufacturer: WASTE-TECH, A DIVISION OF KUSTERS ZIMA CORPORATION	Project/ Order No. WT56722
Address: 101 ZIMA PARK DRIVE, SPARTANBURG, SC 29301	Phone: (864) 576-0660
Fax: (864) 587-5761 / Web Site: www.kusterswater.com	E-mail: kzc@kusterszima.com
Local Vendor/Service Center: WASTE-TECH, A DIVISION OF KUSTERS ZIMA CORPORATION	
Address: 101 ZIMA PARK DRIVE, SPARTANBURG, SC 29301	Phone: (864) 576-0660
Fax: (864) 587-5761 / Web Site: www.kusterswater.com	E-mail: kzc@kusterszima.com

MECHANICAL NAMEPLATE DATA

Equip. GEAR REDUCER - COMPACTOR DRIVE 228.93:1			Serial No. 01.1812101.0002.12	
Make SEW EURODRIVE			Model No. FAF 87	
ID No.	Frame No. AM 145 ADAPTOR	HP	RPM 8	Cap.
Size 267 LBS	TDH	Imp. Sz.	CFM	PSI

Other: SF: 1.5; MOUNTING: C-FACE

ELECTRICAL NAMEPLATE DATA

Equip. MOTOR - COMPACTOR DRIVE					Serial No. DX3124323002			
Make TECO WESTINGHOUSE					Model No. EP0034C			
ID No.	Frame No. 145 TC	HP 3	V. 230-460 V	Amp. 3.74 A @ 460V	HZ 60	PH 3	RPM 1800	SF 1.15
Duty	Code B	Ins. Cl. F	Type TEFC	NEMA YES	C Amb. 40 C	Temp. Rise	Rating	

Other:

SPARE PARTS PROVIDED PER CONTRACT

Part No.	Part Name	Quantity
	WASHWATER SOLENOID VALVES OF EACH SIZE	2
	BRUSH CLIPS	12
	SETS OF BRUSHES	2
	SPARE BULBS FOR CONTROL PANEL INDICATING LIGHTS	6
	SET OF FUSES	1
	SETS OF BAGGING HOSE	5

RECOMMENDED SPARE PARTS

Part No.	Part Name	Quantity
	SELF ALIGNING ROLLER BEARING	1
	RADIAL SHAFT SEAL	1
	V-RING SEAL	1
	O-RING	1
	BRUSH WITH RETAINING CLIP	1
	SCREW AUGER	1
	WEAR BARS WITH HARDWARE	1
	AGITATOR MOTOR	1
	LEVEL SENSOR	1

(Jun 1990; Revised Oct 2001, Revised Nov 2007)

Copyright 1991 HDR Engineering, Inc.

EXHIBIT C2

Equipment Record

Recommended Maintenance Summary

Equipment Description	Project Equip. Tag No(s).
MODEL WT/FSM SPW 200 WASHER COMPACTOR w/ AGITATOR	WHR-12007B/WT SERIAL No.: 615.20/64

RECOMMENDED BREAK-IN MAINTENANCE (FIRST OIL CHANGES, ETC.)	INITIAL COMPLETION * FOLLOWING START-UP						
	D	W	M	Q	S	A	Hours
Change oil after initial run in period (about 1 month)			X				
Lubricating the bearings		X					

RECOMMENDED PREVENTIVE MAINTENANCE	PM TASK INTERVAL *						
	D	W	M	Q	S	A	Hours
Check oil level in gearboxes				X			
Change oil in gearboxes						X	10,000
Check motor bearings						X	12,000
Grease bearings			X				
Check drive units for oil leaks	X						
Check equipment for unusual noises	X						
Check for leaks around the housing		X					
Tighten wearing strips				X			
Check for any visible damage		X					
Resetting Brush				X			
Remove & clean jets					X		
High pressure spray cleaning of exterior				X			
Check all fasteners for tightness		X					

* D = Daily W = Weekly M = Monthly Q = Quarterly S = Semiannual A = Annual Hours = Run Time Interval

(Jun 1990; Revised Oct 2001, Revised Nov 2007)

Copyright 1991 HDR Engineering, Inc.

EXHIBIT C3

Equipment Record

Lubrication Summary

Equipment Description	Project Equip. Tag No(s).
MODEL WT/FSM SPW 200 WASHER/COMPACTOR w/AGITATOR	WHR-12007B/WT SERIAL No.: 615.20/64

Lubricant Point GEARBOXES

Lubricant Type		Manufacturer	Product	AGMA #	SAE #	ISO
	1	MOBIL	MOBILGEAR 680	8	140	VG 680
	2					
	3					
	4					
	5					

Lubricant Point BEARINGS

Lubricant Type		Manufacturer	Product	AGMA #	SAE #	ISO
	1	SHELL	RETINAX LX	8	140	VG 220
	2					
	3					
	4					
	5					

Lubricant Point

Lubricant Type		Manufacturer	Product	AGMA #	SAE #	ISO
	1					
	2					
	3					
	4					
	5					

Lubricant Point

Lubricant Type		Manufacturer	Product	AGMA #	SAE #	ISO
	1					
	2					
	3					
	4					
	5					

Lubricant Point

Lubricant Type		Manufacturer	Product	AGMA #	SAE #	ISO
	1					
	2					
	3					
	4					
	5					

Lubricant Point

Lubricant Type		Manufacturer	Product	AGMA #	SAE #	ISO
	1					
	2					
	3					
	4					
	5					

(Feb 1991; Revised Oct 2001, Revised Nov 2007)
Copyright 1991 HDR Engineering, Inc.

WASTE-TECH
a division of KUSTERS ZIMA

6.2

COMPONENT O & M MANUALS

BALDOR • RELIANCE

Integral Horsepower
AC Induction Motors
ODP, WPI, WPII Enclosure
TEFC Enclosure
Explosion Proof

Installation & Operating Manual

2/07 MN400

Table of Contents

Section 1
General Information 1-1
Overview 1-1
Limited Warranty 1-1
Safety Notice 1-2
Receiving 1-4
Storage 1-4
Unpacking 1-4
Handling 1-4
Section 2
Installation & Operation 2-1
Overview 2-1
Location 2-1
Mounting 2-1
Alignment 2-1
Doweling & Bolting 2-2
Power Connection 2-2
Conduit Box 2-2
AC Power 2-2
First Time Start Up 2-4
Coupled Start Up 2-4
Jogging and Repeated Starts 2-4
Section 3
Maintenance & Troubleshooting 3-1
General Inspection 3-1
Lubrication & Bearings 3-1
Type of Grease 3-1
Relubrication Intervals 3-1
Relubrication Procedure 3-3
Accessories 3-4
Troubleshooting Chart 3-5

Section 1
General Information

Overview This manual contains general procedures that apply to Baldor Motor products. Be sure to read and understand the Safety Notice statements in this manual. For your protection, do not install, operate or attempt to perform maintenance procedures until you understand the Warning and Caution statements. A Warning statement indicates a possible unsafe condition that can cause harm to personnel. A Caution statement indicates a condition that can cause damage to equipment.

Important: **This instruction manual is not intended to include a comprehensive listing of all details for all procedures required for installation, operation and maintenance. This manual describes general guidelines that apply to most of the motor products shipped by Baldor. If you have a question about a procedure or are uncertain about any detail, Do Not Proceed. Please contact your Baldor distributor for more information or clarification.**

Before you install, operate or perform maintenance, become familiar with the following:

- NEMA Publication MG-2, Safety Standard for Construction and guide for Selection, Installation and Use of Electric Motors and Generators.
- The National Electrical Code
- Local codes and Practices

Limited Warranty

1. Most Baldor products are warranted for 18 months from the date of shipment to Baldor's customer from Baldor's district warehouse or, if applicable, from Baldor's factory. Baldor Standard-E® standard efficient motors are warranted for 24 months. Standard-E is limited to three phase, general purpose, 1-200 HP ratings that fall under the Energy Policy Act (EPAct). Baldor Super-E® premium efficient motors are warranted for 36 months. Baldor IEEE841 motors are warranted for 60 months. All warranty claims must be submitted to a Baldor Service Center prior to the expiration of the warranty period.
2. Baldor will, at its option repair or replace a motor which fails due to defects in material or workmanship during the warranty period if:
   a. the purchaser presents the defective motor at or ships it prepaid to, the Baldor plant in Fort Smith, Arkansas or one of the Baldor Authorized Service Centers and
   b. the purchaser gives written notification concerning the motor and the claimed defect including the date purchased, the task performed by the Baldor motor and the problem encountered.
3. Baldor will not pay the cost of removal of any electric motor from any equipment, the cost of delivery to Fort Smith, Arkansas or a Baldor Authorized Service Center, or the cost of any incidental or consequential damages resulting from the claimed defects. (Some states do not allow the exclusion or limitation of incidental or consequential damages, so the above exclusion may not apply to you.) Any implied warranty given by laws shall be limited to the duration of the warranty period hereunder. (Some states do not allow limitations on how long an implied warranty lasts, so the above limitation may not apply to you.)
4. Baldor Authorized Service Centers, when convinced to their satisfaction that a Baldor motor developed defects in material or workmanship within the warranty period, are authorized to proceed with the required repairs to fulfill Baldor's warranty when the cost of such repairs to be paid by Baldor does not exceed Baldor's warranty repair allowance. Baldor will not pay overtime premium repair charges without prior written authorization.
5. The cost of warranty repairs made by centers other than Baldor Authorized Service Centers **WILL NOT** be paid unless first authorized in writing by Baldor.
6. Claims by a purchaser that a motor is defective even when a failure results within one hour after being placed into service are not always justified. Therefore, Baldor Authorized Service Centers must determine from the condition of the motor as delivered to the center whether or not the motor is defective. If in the opinion of a Baldor Authorized Service Center, a motor did not fail as a result of defects in material or workmanship, the center is to proceed with repairs only if the purchaser agrees to pay for such repairs. If the decision is in dispute, the purchaser should still pay for the repairs and submit the paid invoice and the Authorized Service Center's signed service report to Baldor for further consideration.
7. This warranty gives you specific legal rights, and you may also have other rights which vary from state to state.

Safety Notice:

This equipment contains high voltage! Electrical shock can cause serious or fatal injury. Only qualified personnel should attempt installation, operation and maintenance of electrical equipment.

Be sure that you are completely familiar with NEMA publication MG-2, safety standards for construction and guide for selection, installation and use of electric motors and generators, the National Electrical Code and local codes and practices. Unsafe installation or use can cause conditions that lead to serious or fatal injury. Only qualified personnel should attempt the installation, operation and maintenance of this equipment.

WARNING: **Do not touch electrical connections before you first ensure that power has been disconnected. Electrical shock can cause serious or fatal injury. Only qualified personnel should attempt the installation, operation and maintenance of this equipment.**

WARNING: **Be sure the system is properly grounded before applying power. Do not apply AC power before you ensure that all grounding instructions have been followed. Electrical shock can cause serious or fatal injury. National Electrical Code and Local codes must be carefully followed.**

WARNING: **Avoid extended exposure to machinery with high noise levels. Be sure to wear ear protective devices to reduce harmful effects to your hearing.**

WARNING: **This equipment may be connected to other machinery that has rotating parts or parts that are driven by this equipment. Improper use can cause serious or fatal injury. Only qualified personnel should attempt to install operate or maintain this equipment.**

WARNING: **Do not by-pass or disable protective devices or safety guards. Safety features are designed to prevent damage to personnel or equipment. These devices can only provide protection if they remain operative.**

WARNING: **Avoid the use of automatic reset devices if the automatic restarting of equipment can be hazardous to personnel or equipment.**

WARNING: **Be sure the load is properly coupled to the motor shaft before applying power. The shaft key must be fully captive by the load device. Improper coupling can cause harm to personnel or equipment if the load decouples from the shaft during operation.**

WARNING: **Use proper care and procedures that are safe during handling, lifting, installing, operating and maintaining operations. Improper methods may cause muscle strain or other harm.**

WARNING: **Before performing any motor maintenance procedure, be sure that the equipment connected to the motor shaft cannot cause shaft rotation. If the load can cause shaft rotation, disconnect the load from the motor shaft before maintenance is performed. Unexpected mechanical rotation of the motor parts can cause injury or motor damage.**

WARNING: **Disconnect all electrical power from the motor windings and accessory devices before disassembly of the motor. Electrical shock can cause serious or fatal injury.**

WARNING: **Do not use non UL/CSA listed explosion proof motors in the presence of flammable or combustible vapors or dust. These motors are not designed for atmospheric conditions that require explosion proof operation.**

WARNING: **Motors that are to be used in flammable and/or explosive atmospheres must display the UL label on the nameplate along with CSA listed logo.**

Specific service conditions for these motors are defined in NFPA 70 (NEC) Article 500.

WARNING: **UL Listed motors must only be serviced by UL Approved Authorized Baldor Service Centers if these motors are to be returned to a hazardous and/or explosive atmosphere.**

Caution: **To prevent premature equipment failure or damage, only qualified maintenance personnel should perform maintenance.**

Caution: **Do not over-lubricate motor as this may cause premature bearing failure.**

Caution: **Do not lift the motor and its driven load by the motor lifting hardware. The motor lifting hardware is adequate for lifting only the motor. Disconnect the load from the motor shaft before moving the motor.**

Caution: **If eye bolts are used for lifting a motor, be sure they are securely tightened. The lifting direction should not exceed a 20° angle from the shank of the eye bolt or lifting lug. Excessive lifting angles can cause damage.**

Caution: **To prevent equipment damage, be sure that the electrical service is not capable of delivering more than the maximum motor rated amps listed on the rating plate.**

Caution: **If a HI POT test (High Potential Insulation test) must be performed, follow the precautions and procedure in NEMA MG1 and MG2 standards to avoid equipment damage.**

If you have any questions or are uncertain about any statement or procedure, or if you require additional information please contact your Baldor distributor or an Authorized Baldor Service Center.

Receiving

Each Baldor Electric Motor is thoroughly tested at the factory and carefully packaged for shipment. When you receive your motor, there are several things you should do immediately.

1. Observe the condition of the shipping container and report any damage immediately to the commercial carrier that delivered your motor.
2. Verify that the part number of the motor you received is the same as the part number listed on your purchase order.

Storage

If the motor is not put into service immediately, the motor must be stored in a clean, dry and warm location. Several precautionary steps must be performed to avoid motor damage during storage.

1. Use a “Megger” periodically to ensure that the integrity of the winding insulation has been maintained. Record the Megger readings. Immediately investigate any significant drop in insulation resistance.
2. Do not lubricate bearings during storage. Motor bearings are packed with grease at the factory. Excessive grease can damage insulation quality.
3. Rotate motor shaft at least 10 turns every two months during storage (more frequently if possible). This will prevent bearing damage due to storage.
4. If the storage location is damp or humid, the motor windings must be protected from moisture. This can be done by applying power to the motors’ space heater (if available) while the motor is in storage.

Unpacking

Each Baldor motor is packaged for ease of handling and to prevent entry of contaminants.

1. To avoid condensation inside the motor, do not unpack until the motor has reached room temperature. (Room temperature is the temperature of the room in which it will be installed). The packing provides insulation from temperature changes during transportation.
2. When the motor has reached room temperature, remove all protective wrapping material from the motor.

Handling

The motor should be lifted using the lifting lugs or eye bolts provided.

1. Use the lugs or eye bolts provided to lift the motor. Never attempt to lift the motor and additional equipment connected to the motor by this method. The lugs or eye bolts provided are designed to lift only the motor. Never lift the motor by the motor shaft or the hood of a WPII motor.
2. When lifting a WPII (Weather Proof Type 2) motor, do not lift the motor by inserting lifting lugs into holes on top of the cooling hood. These lugs are to be used for hood removal only. A spreader bar should be used to lift the motor by the cast lifting lugs located on the motor frame.
3. If the motor must be mounted to a plate with the driven equipment such as pump, compressor etc., it may not be possible to lift the motor alone. For this case, the assembly should be lifted by a sling around the mounting base. The entire assembly can be lifted as an assembly for installation. Do not lift using the motor lugs or eye bolts provided.

   If the load is unbalanced (as with couplings or additional attachments) additional slings or other means must be used to prevent tipping. In any event, the load must be secure before lifting.

Section 2
Installation & Operation

Overview

Installation should conform to the National Electrical Code as well as local codes and practices. When other devices are coupled to the motor shaft, be sure to install protective devices to prevent future accidents. Some protective devices include, coupling, belt guard, chain guard, shaft covers etc. These protect against accidental contact with moving parts. Machinery that is accessible to personnel should provide further protection in the form of guard rails, screening, warning signs etc.

Location

It is important that motors be installed in locations that are compatible with motor enclosure and ambient conditions. Improper selection of the motor enclosure and ambient conditions can lead to reduced operating life of the motor.

Proper ventilation for the motor must be provided. Obstructed airflow can lead to reduction of motor life.

1. **Open Drip-Proof/WPI** motors are intended for use indoors where atmosphere is relatively clean, dry, well ventilated and non-corrosive.
2. **Totally Enclosed and WPII** motors may be installed where dirt, moisture or dust are present and in outdoor locations.

Severe Duty, IEEE 841 and Washdown Duty enclosed motors are designed for installations with high corrosion or excessive moisture conditions. These motors should not be placed into an environment where there is the presence of flammable or combustible vapors, dust or any combustible material, unless specifically designed for this type of service.

Mounting

The motor must be securely installed to a rigid foundation or mounting surface to minimize vibration and maintain alignment between the motor and shaft load. Failure to provide a proper mounting surface may cause vibration, misalignment and bearing damage.

Foundation caps and sole plates are designed to act as spacers for the equipment they support. If these devices are used, be sure that they are evenly supported by the foundation or mounting surface.

After installation is complete and accurate alignment of the motor and load is accomplished, the base should be grouted to the foundation to maintain this alignment.

The standard motor base is designed for horizontal or vertical mounting. Adjustable or sliding rails are designed for horizontal mounting only. Consult your Baldor distributor or authorized Baldor Service Center for further information.

Alignment

Accurate alignment of the motor with the driven equipment is extremely important.

1. **Direct Coupling**
   For direct drive, use flexible couplings if possible. Consult the drive or equipment manufacturer for more information. Mechanical vibration and roughness during operation may indicate poor alignment. Use dial indicators to check alignment. The space between coupling hubs should be maintained as recommended by the coupling manufacturer.
2. **End-Play Adjustment**
   The axial position of the motor frame with respect to its load is also extremely important. The motor bearings are not designed for excessive external axial thrust loads. Improper adjustment will cause failure.
3. **Pulley Ratio**
   The pulley ratio should not exceed 8:1.
4. **Belt Drive**
   Align sheaves carefully to minimize belt wear and axial bearing loads (see End-Play Adjustment). Belt tension should be sufficient to prevent belt slippage at rated speed and load. However, belt slippage may occur during starting.

Caution: Do not over tension belts.

5. Sleeve bearing motors are only suitable for coupled loads.

Doweling & Bolting

After proper alignment is verified, dowel pins should be inserted through the motor feet into the foundation. This will maintain the correct motor position should motor removal be required. (Baldor motors are designed for doweling.)

1. Drill dowel holes in diagonally opposite motor feet in the locations provided.
2. Drill corresponding holes in the foundation.
3. Ream all holes.
4. Install proper fitting dowels.
5. Mounting bolts must be carefully tightened to prevent changes in alignment. Use a flat washer and lock washer under each nut or bolt head to hold the motor feet secure. Flanged nuts or bolts may be used as an alternative to washers.

Power Connection

Motor and control wiring, overload protection, disconnects, accessories and grounding should conform to the National Electrical Code and local codes and practices.

Conduit Box

For ease of making connections, an oversize conduit box is provided. The box can be rotated 360° in 90° increments. Auxiliary conduit boxes are provided on some motors for accessories such as space heaters, RTD's etc.

AC Power

Connect the motor leads as shown on the connection diagram located on the name plate or inside the cover on the conduit box. Be sure the following guidelines are met:

1. AC power is within ±10% of rated voltage with rated frequency. (See motor name plate for ratings).
   OR
2. AC power is within ±5% of rated frequency with rated voltage.
   OR
3. A combined variation in voltage and frequency of ±10% (sum of absolute values) of rated values, provided the frequency variation does not exceed ±5% of rated frequency.

Performance within these voltage and frequency variations are shown in Figure 2-2.

Figure 2-1 Accessory Connections

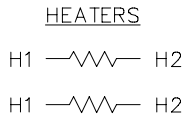

One heater is installed in each end of motor.
Leads for each heater are labeled H1 & H2.
(Like numbers should be tied together).

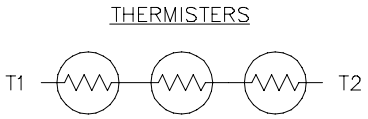

Three thermisters are installed in windings and tied in series.
Leads are labeled T1 & T2.

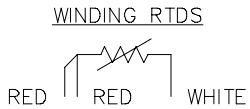

Winding RTDs are installed in windings (2) per phase.
Each set of leads is labeled W1, W2, W3, W4, W5, & W6.

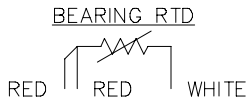

* One bearing RTD is installed in Drive endplate (PUEP), leads are labeled RTDDE.
* One bearing RTD is installed in Opposite Drive endplate (FREP), leads are labeled RTDODE.

* Note RTD may have 2-Red/1-White leads; or 2-White/1-Red Lead.

Figure 2-2 Typical Motor Performance VS Voltage Variations

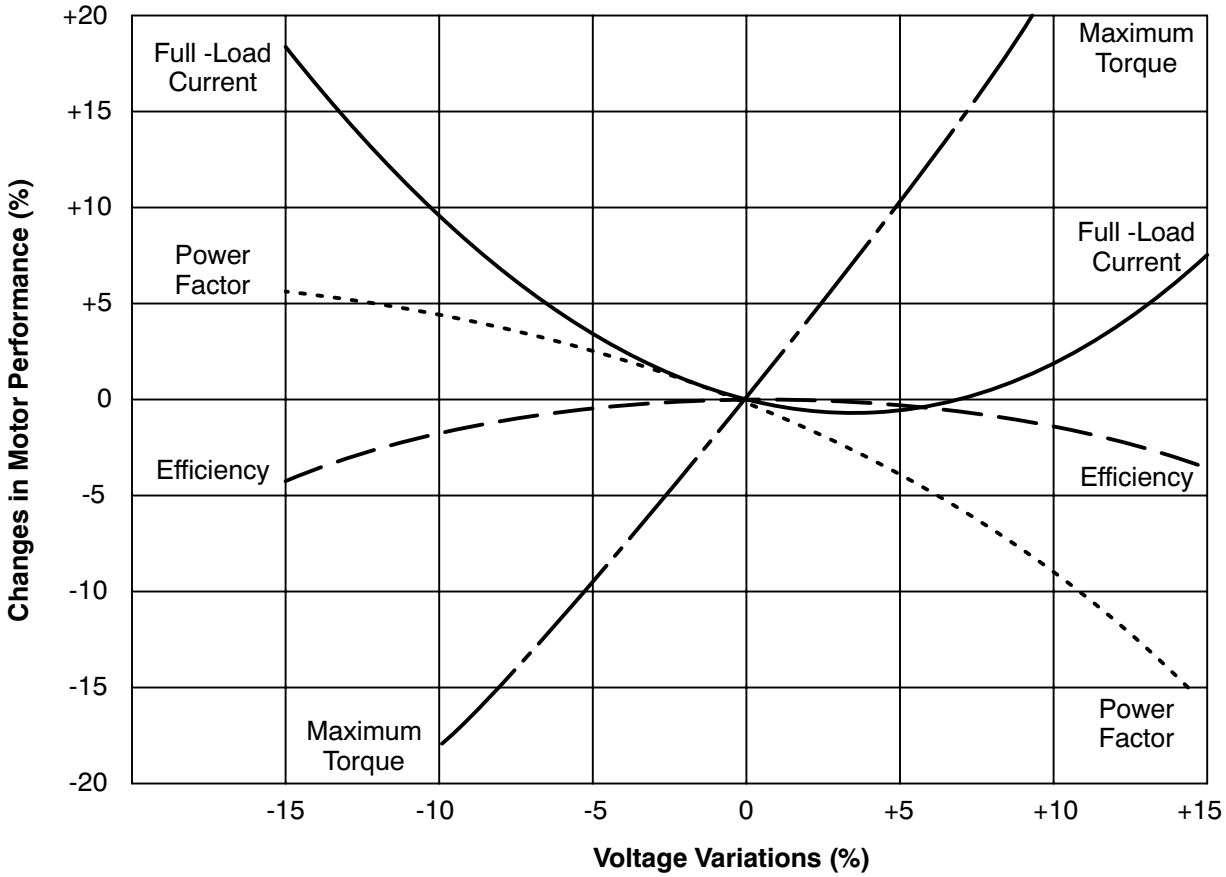

First Time Start Up

Be sure that all power to motor and accessories is off. Be sure the motor shaft is disconnected from the load and will not cause mechanical rotation of the motor shaft.

1. Make sure that the mechanical installation is secure. All bolts and nuts are tightened etc.
2. If motor has been in storage or idle for some time, check winding insulation integrity with a Megger.
3. Inspect all electrical connections for proper termination, clearance, mechanical strength and electrical continuity.
4. Be sure all shipping materials and braces (if used) are removed from motor shaft.
5. Manually rotate the motor shaft to ensure that it rotates freely.
6. Replace all panels and covers that were removed during installation.
7. Momentarily apply power and check the direction of rotation of the motor shaft.
8. If motor rotation is wrong, be sure power is off and change the motor lead connections. Verify rotation direction before you continue.
9. Start the motor and ensure operation is smooth without excessive vibration or noise. If so, run the motor for 1 hour with no load connected.
10. After 1 hour of operation, disconnect power and connect the load to the motor shaft. Verify all coupling guards and protective devices are installed. Ensure motor is properly ventilated.

Coupled Start Up

This procedure assumes a coupled start up. Also, that the first time start up procedure was successful.

1. Check the coupling and ensure that all guards and protective devices are installed.
2. Check that the coupling is properly aligned and not binding.
3. The first coupled start up should be with no load. Apply power and verify that the load is not transmitting excessive vibration back to the motor though the coupling or the foundation. Vibration should be at an acceptable level.
4. Run for approximately 1 hour with the driven equipment in an unloaded condition.

The equipment can now be loaded and operated within specified limits. Do not exceed the name plate ratings for amperes for steady continuous loads.

Jogging and Repeated Starts Repeated starts and/or jogs of induction motors generally reduce the life of the motor winding insulation. A much greater amount of heat is produced by each acceleration or jog than by the same motor under full load. If it is necessary to repeatedly start or jog the motor, it is advisable to check the application with your local Baldor distributor or Baldor Service Center.

Heating - Duty rating and maximum ambient temperature are stated on the motor name plate. Do not exceed these values. If there is any question regarding safe operation, contact your local Baldor distributor or Baldor Service Center.

Section 3
Maintenance & Troubleshooting

WARNING: UL Listed motors must only be serviced by UL Approved Authorized Baldor Service Centers if these motors are to be returned to a hazardous and/or explosive atmosphere.

General Inspection

Inspect the motor at regular intervals, approximately every 500 hours of operation or every 3 months, whichever occurs first. Keep the motor clean and the ventilation openings clear. The following steps should be performed at each inspection:

WARNING: Do not touch electrical connections before you first ensure that power has been disconnected. Electrical shock can cause serious or fatal injury. Only qualified personnel should attempt the installation, operation and maintenance of this equipment.

1. Check that the motor is clean. Check that the interior and exterior of the motor is free of dirt, oil, grease, water, etc. Oily vapor, paper pulp, textile lint, etc. can accumulate and block motor ventilation. If the motor is not properly ventilated, overheating can occur and cause early motor failure.
2. Use a “Megger” periodically to ensure that the integrity of the winding insulation has been maintained. Record the Megger readings. Immediately investigate any significant drop in insulation resistance.
3. Check all electrical connectors to be sure that they are tight.

Relubrication & Bearings

Bearing grease will lose its lubricating ability over time, not suddenly. The lubricating ability of a grease (over time) depends primarily on the type of grease, the size of the bearing, the speed at which the bearing operates and the severity of the operating conditions. Good results can be obtained if the following recommendations are used in your maintenance program.

Type of Grease

A high grade ball or roller bearing grease should be used. Recommended grease for standard service conditions is Polyrex EM (Exxon Mobil).

Equivalent and compatible greases include:
Texaco Polystar, Rykon Premium #2, Pennzoil Pen 2 Lube and Chevron SRI.

Relubrication Intervals

Recommended relubrication intervals are shown in Table 3-1. It is important to realize that the recommended intervals of Table 3-1 are based on average use.

Refer to additional information contained in Tables 3-2, 3-3 and 3-4.

Table 3-1 Relubrication Intervals *

NEMA / (IEC) Frame Size	Rated Speed - RPM					
	10000	6000	3600	1800	1200	900
Up to 210 incl. (132)	**	2700 Hrs.	5500 Hrs.	12000 Hrs.	18000 Hrs.	22000 Hrs.
Over 210 to 280 incl. (180)		**	3600 Hrs.	9500 Hrs.	15000 Hrs.	18000 Hrs.
Over 280 to 360 incl. (225)		**	* 2200 Hrs.	7400 Hrs.	12000 Hrs.	15000 Hrs.
Over 360 to 5800 incl. (300)		**	*2200 Hrs.	3500 Hrs.	7400 Hrs.	10500 Hrs.

* Relubrication intervals are for ball bearings.
For vertically mounted motors and roller bearings, divide the relubrication interval by 2.

** For motors operating at speeds greater than 3600 RPM, contact Baldor for relubrication recommendations.

Table 3-2 Service Conditions

Severity of Service	Hours per day of Operation	Ambient Temperature Maximum	Atmospheric Contamination
Standard	8	40° C	Clean, Little Corrosion
Severe	16 Plus	50° C	Moderate dirt, Corrosion
Extreme	16 Plus	>50° C* or Class H Insulation	Severe dirt, Abrasive dust, Corrosion, Heavy Shock or Vibration
Low Temperature		<-29 ° C **	

* Special high temperature grease is recommended (Dow Corning DC44). Note that Dow Corning DC44 grease does not mix with other grease types. Thoroughly clean bearing & cavity before adding grease.

** Special low temperature grease is recommended (Aeroshell 7).

Table 3-3 Relubrication Interval Multiplier

Severity of Service	Multiplier
Standard	1.0
Severe	0.5
Extreme	0.1
Low Temperature	1.0

Some motor designs use different bearings on each motor end. This is normally indicated on the motor nameplate. In this case, the larger bearing is installed on the motor Drive endplate. For best relubrication results, only use the appropriate amount of grease for each bearing size (not the same for both).

Table 3-4 Bearings Sizes and Types

Frame Size NEMA (IEC)	Bearing Description (These are the "Large" bearings (Shaft End) in each frame size)			
	Bearing	Weight of Grease to add * oz (Grams)	Volume of grease to be added	
			in^3	teaspoon
56 to 140 (90)	6203	0.08 (2.4)	0.15	0.5
140 (90)	6205	0.15 (3.9)	0.2	0.8
180 (100-112)	6206	0.19 (5.0)	0.3	1.0
210 (132)	6307	0.30 (8.4)	0.6	2.0
250 (160)	6309	0.47 (12.5)	0.7	2.5
280 (180)	6311	0.61 (17)	1.2	3.9
320 (200)	6312	0.76 (20.1)	1.2	4.0
360 (225)	6313	0.81 (23)	1.5	5.2
400 (250)	6316	1.25 (33)	2.0	6.6
440 (280)	6319	2.12 (60)	4.1	13.4
5000 to 5800 (315-450)	6328	4.70 (130)	9.2	30.0
5000 to 5800 (315-450)	NU328	4.70 (130)	9.2	30.0
360 to 449 (225-280)	NU319	2.12 (60)	4.1	13.4
AC Induction Servo				
76 Frame 180 (112)	6207	0.22 (6.1)	0.44	1.4
77 Frame 210 (132)	6210	0.32 (9.0)	0.64	2.1
80 Frame 250(160)	6213	0.49 (14.0)	0.99	3.3

* Weight in grams = .005 DB of grease to be added

Note: Not all bearing sizes are listed. For intermediate bearing sizes, use the grease volume for the next larger size bearing.

Caution: To avoid damage to motor bearings, grease must be kept free of dirt. For an extremely dirty environment, contact your Baldor distributor or an authorized Baldor Service Center for additional information.

Relubrication Procedure

Be sure that the grease you are adding to the motor is compatible with the grease already in the motor. Consult your Baldor distributor or an authorized service center if a grease other than the recommended type is to be used.

Caution: Do not over-lubricate motor as this may cause premature bearing failure.

With Grease Outlet Plug

1. With the motor stopped, clean all grease fittings with a clean cloth.
2. Remove grease outlet plug.

Caution: Over-lubricating can cause excessive bearing temperatures, premature lubrication breakdown and bearing failure.

3. Add the recommended amount of grease.
4. Operate the motor for 15 minutes with grease plug removed. This allows excess grease to purge.
5. Re-install grease outlet plug.

Without Grease Provisions

Note: Only a Baldor authorized and UL or CSA certified service center can disassemble a UL/CSA listed explosion proof motor to maintain it's UL/CSA listing.

1. Disassemble the motor.
2. Add recommended amount of grease to bearing and bearing cavity. (Bearing should be about 1/3 full of grease and outboard bearing cavity should be about 1/2 full of grease.)
3. Assemble the motor.

Sample Relubrication Determination

Assume - NEMA 286T (IEC 180), 1750 RPM motor driving an exhaust fan in an ambient temperature of 43° C and the atmosphere is moderately corrosive.

1. Table 3-1 list 9500 hours for standard conditions.
2. Table 3-2 classifies severity of service as “Severe”.
3. Table 3-4 shows that 1.2 in^3 or 3.9 teaspoon of grease is to be added.

Note: Smaller bearings in size category may require reduced amounts of grease.

Table 3-5 Troubleshooting Chart

Symptom	Possible Causes	Possible Solutions
Motor will not start	Usually caused by line trouble, such as, single phasing at the starter.	Check source of power. Check overloads, fuses, controls, etc.
Excessive humming	High Voltage.	Check input line connections.
	Eccentric air gap.	Have motor serviced at local Baldor service center.
Motor Over Heating	Overload. Compare actual amps (measured) with nameplate rating.	Locate and remove source of excessive friction in motor or load. Reduce load or replace with motor of greater capacity.
	Single Phasing.	Check current at all phases (should be approximately equal) to isolate and correct the problem.
	Improper ventilation.	Check external cooling fan to be sure air is moving properly across cooling fins. Excessive dirt build-up on motor. Clean motor.
	Unbalanced voltage.	Check voltage at all phases (should be approximately equal) to isolate and correct the problem.
	Rotor rubbing on stator.	Check air gap clearance and bearings.
		Tighten “Thru Bolts”.
	Over voltage or under voltage.	Check input voltage at each phase to motor.
	Open stator winding.	Check stator resistance at all three phases for balance.
	Grounded winding.	Perform dielectric test and repair as required.
	Improper connections.	Inspect all electrical connections for proper termination, clearance, mechanical strength and electrical continuity. Refer to motor lead connection diagram.
Bearing Over Heating	Misalignment.	Check and align motor and driven equipment.
	Excessive belt tension.	Reduce belt tension to proper point for load.
	Excessive end thrust.	Reduce the end thrust from driven machine.
	Excessive grease in bearing.	Remove grease until cavity is approximately $^3/_4$ filled.
	Insufficient grease in bearing.	Add grease until cavity is approximately $^3/_4$ filled.
	Dirt in bearing.	Clean bearing cavity and bearing. Repack with correct grease until cavity is approximately $^3/_4$ filled.
Vibration	Misalignment.	Check and align motor and driven equipment.
	Rubbing between rotating parts and stationary parts.	Isolate and eliminate cause of rubbing.
	Rotor out of balance.	Have rotor balance checked are repaired at your Baldor Service Center.
	Resonance.	Tune system or contact your Baldor Service Center for assistance.
Noise	Foreign material in air gap or ventilation openings.	Remove rotor and foreign material. Reinstall rotor. Check insulation integrity. Clean ventilation openings.
Growling or whining	Bad bearing.	Replace bearing. Clean all grease from cavity and new bearing. Repack with correct grease until cavity is approximately $^3/_4$ filled.

Suggested bearing and winding RTD setting guidelines

Most large frame AC Baldor motors with a 1.15 service factor are designed to operate below a Class B (80°C) temperature rise at rated load and are built with a Class H winding insulation system. Based on this low temperature rise, RTD (Resistance Temperature Detectors) settings for Class B rise should be used as a starting point. Some motors with 1.0 service factor have Class F temperature rise.

The following tables show the suggested alarm and trip settings for RTDs. Proper bearing and winding RTD alarm and trip settings should be selected based on these tables unless otherwise specified for specific applications.

If the driven load is found to operate well below the initial temperature settings under normal conditions, the alarm and trip settings may be reduced so that an abnormal machine load will be identified.

The temperature limits are based on the installation of the winding RTDs imbedded in the winding as specified by NEMA. Bearing RTDs should be installed so they are in contact with the outer race on ball or roller bearings or in direct contact with the sleeve bearing shell.

Winding RTDs - Temperature Limit In °C (40°C Maximum Ambient)

Motor Load	Class B Temp Rise ≤ 80°C (Typical Design)		Class F Temp Rise ≤ 105°C		Class H Temp Rise ≤ 125°C	
	Alarm	Trip	Alarm	Trip	Alarm	Trip
≤ Rated Load	130	140	155	165	175	185
Rated Load to 1.15 S.F.	140	150	160	165	180	185

Note: • Winding RTDs are factory production installed, not from Mod-Express.
• When Class H temperatures are used, consider bearing temperatures and relubrication requirements.

Bearing RTDs - Temperature Limit In °C (40°C Maximum Ambient)

Bearing Type Oil or Grease	Anti-Friction		Sleeve	
	Alarm	Trip	Alarm	Trip
Standard*	95	100	85	95
High Temperature**	110	115	105	110

Note: * Bearing temperature limits are for standard design motors operating at Class B temperature rise.
** High temperature lubricants include some special synthetic oils and greases.

Greases that may be substituted that are compatible with Polyrex EM (but considered as "standard" lubricants) include the following:

- Texaco Polystar
- Rykon Premium #2
- Chevron SRI #2
- Mobilith SHC-100
- Pennzoil Pennzlube EM-2
- Chevron Black Pearl
- Darmex 707
- Darmex 711
- Petro-Canada Peerless LLG

See the motor nameplate for replacement grease or oil recommendation.
Contact Baldor application engineering for special lubricants or further clarifications.

Baldor District Offices Baldor District Offices Baldor District Offices

UNITED STATES

ARIZONA
PHOENIX
4211 S 43RD PLACE
PHOENIX, AZ 85040
PHONE: 602-470-0407
FAX: 602-470-0464

ARKANSAS
CLARKSVILLE
1001 COLLEGE AVE.
CLARKSVILLE, AR 72830
PHONE: 479-754-9108
FAX: 479-754-9205

CALIFORNIA
LOS ANGELES
6480 FLOTILLA
COMMERCE, CA 90040
PHONE: 323-724-6771
FAX: 323-721-5859

HAYWARD
21056 FORBES STREET
HAYWARD, CA 94545
PHONE: 510-785-9900
FAX: 510-785-9910

COLORADO
DENVER
3855 FOREST STREET
DENVER, CO 80207
PHONE: 303-623-0127
FAX: 303-595-3772

9980 PARK MEADOWS DRIVE
SUITE 214
LONE TREE, CO 80124-6739
PHONE: 303-339-9629
FAX: 303-339-9633

CONNECTICUT
WALLINGFORD
65 SOUTH TURNPIKE ROAD
WALLINGFORD, CT 06492
PHONE: 203-269-1354
FAX: 203-269-5485

FLORIDA
TAMPA/PUERTO RICO/
VIRGIN ISLANDS
3906 EAST 11TH AVENUE
TAMPA, FL 33605
PHONE: 813-248-5078
FAX: 813-247-2984

GEORGIA
ATLANTA
62 TECHNOLOGY DR.
ALPHARETTA, GA 30005
PHONE: 770-772-7000
FAX: 770-772-7200

5490 MCGINNIS FERRY PLACE
SUITE 133
ALPHARETTA, GA 30005
PHONE: 770-752-4254
FAX: 770-752-4257

ILLINOIS
CHICAGO
1601 FRONTENAC ROAD
NAPERVILLE, IL 60563
PHONE: 630-848-5100
FAX: 630-848-5110

INDIANA
COLUMBUS
3300 TENTH ST
COLUMBUS, IN 47201
PHONE: 812-378-2556
FAX: 812-378-2555

INDIANAPOLIS
5525 W. MINNESOTA STREET
INDIANAPOLIS, IN 46241
PHONE: 317-246-5100
FAX: 317-246-5110

IOWA
DES MOINES
1800 DIXON STREET, SUITE C
DES MOINES, IA 50316
PHONE: 515-263-6929
FAX: 515-263-6515

KANSAS
5030 BOB BILLINGS PKWY STE B
LAWRENCE, KS 66049
PHONE: 785-749-4339
FAX: 785-749-4217

MARYLAND
BALTIMORE
6660 SANTA BARBARA RD.
SUITE 22-24
ELKRIDGE, MD 21075
PHONE: 410-579-2135
FAX: 410-579-2677

MASSACHUSETTS
BOSTON
6 PULLMAN STREET
WORCESTER, MA 01606
PHONE: 508-854-0708
FAX: 508-854-0291

MICHIGAN
DETROIT
33782 STERLING PONDS BLVD.
STERLING HEIGHTS, MI 48312
PHONE: 586-978-9800
FAX: 586-978-9969

GRAND RAPIDS
668 THREE MILE ROAD NW
GRAND RAPIDS, MI 49504
PHONE: 616-785-1784
FAX: 616-785-1788

MINNESOTA
MINNEAPOLIS
21080 134TH AVE. NORTH
ROGERS, MN 55374
PHONE: 763-428-3633
FAX: 763-428-4551

MISSOURI
ST LOUIS
422 INDUSTRIAL DRIVE
MARYLAND HEIGHTS, MO 63043
PHONE: 314-298-1800
FAX: 314-298-7660

KANSAS CITY
1501 BEDFORD AVENUE
NORTH KANSAS CITY, MO 64116
PHONE: 816-587-0272
FAX: 816-587-3735

NEW YORK
AUBURN
ONE ELLIS DRIVE
AUBURN, NY 13021
PHONE: 315-255-3403
FAX: 315-253-9923

NORTH CAROLINA
GREENSBORO
1220 ROTHERWOOD ROAD
GREENSBORO, NC 27406
P O BOX 16500
GREENSBORO, NC 27416
PHONE: 336-272-6104
FAX: 336-273-6628

OHIO
CINCINNATI
2929 CRESCENTVILLE ROAD
WEST CHESTER, OH 45069
PHONE: 513-771-2600
FAX: 513-772-2219

CLEVELAND
8929 FREEWAY DRIVE
MACEDONIA, OH 44056
PHONE: 330-468-4777
FAX: 330-468-4778

29525 CHAGRIN BLVD SUITE 208
CLEVELAND, OH 44122
PHONE: 216-360-8296
FAX: 216-360-4172

OKLAHOMA
TULSA
2 EAST DAWES
BIXBY, OK 74008
PHONE: 918-366-9320
FAX: 918-366-9338

OREGON
PORTLAND
20393 SW AVERY COURT
TUALATIN, OR 97062
PHONE: 503-691-9010
FAX: 503-691-9012

PENNSYLVANIA
KING OF PRUSSIA
1060 FIRST AVE STE 400
KING OF PRUSSIA, PA 19406
PHONE: 610-768-8018
FAX: 215-672-5759

PHILADELPHIA
1035 THOMAS BUSCH
MEMORIAL HIGHWAY
PENNSAUKEN, NJ 08110
PHONE: 856-661-1442
FAX: 856-663-6363

PITTSBURGH
159 PROMINENCE DRIVE
NEW KENSINGTON, PA 15068
PHONE: 724-889-0092
FAX: 724-889-0094

TENNESSEE
MEMPHIS
4000 WINCHESTER ROAD
MEMPHIS, TN 38118
PHONE: 901-365-2020
FAX: 901-365-3914

TEXAS
ADDISON
3939 BELT LINE ROAD #250
ADDISON, TX 75001
PHONE: 972-499-7746, 499-7747
FAX: 972-242-1505

HOUSTON
4647 PINE TIMBERS
SUITE # 135
HOUSTON, TX 77041
PHONE: 713-895-7062
FAX: 713-690-4540

DALLAS
3040 QUEBEC
DALLAS, TX 75247
PHONE: 214-634-7271
FAX: 214-634-8874

UTAH
SALT LAKE CITY
2230 SOUTH MAIN STREET
SALT LAKE CITY, UT 84115
PHONE: 801-832-0127
FAX: 801-832-8911

VIRGINIA
RICHMOND
6767 FOREST HILL AVE STE 305
RICHMOND, VA 23225
PHONE: 804-545-6848
FAX: 804-545-6840

WASHINGTON
KIRKLAND, WA
550 KIRKLAND WAY STE 205
KIRKLAND, WA 98033
PHONE: 425-952-5000
FAX: 775-255-8019

WISCONSIN
MILWAUKEE
2725 SOUTH 163RD STREET
NEW BERLIN, WI 53151
PHONE: 262-784-5940
FAX: 262-784-1215

WAUKESHA
N14 W23777 STONE RIDGE DRIVE
SUITE 170
WAUKESHA, WI 53188
PHONE: 262-347-2000
FAX: 262-437-0258

INTERNATIONAL SALES
FORT SMITH, AR
P.O. BOX 2400
FORT SMITH, AR 72902
PHONE: 479-646-4711
FAX: 479-648-5895

CANADA
EDMONTON, ALBERTA
4053-92 STREET
EDMONTON, ALBERTA T6E 6R8
PHONE: 780-434-4900
FAX: 780-438-2600

11428-168 STREET
EDMONTON, ALBERTA T5M 3T9
PHONE: 780-822-7865
FAX: 780-822-7878

MISSISSAUGA, ONTARIO
244 BRITANNIA ROAD EAST
MISSISSAUGA, ONTARIO L4Z 1S6
PHONE: 905-890-5110
FAX: 905-890-5540

OAKVILLE, ONTARIO
2750 COVENTRY ROAD
OAKVILLE, ONTARIO L6H 6R1
PHONE: 905-829-3301
FAX: 905-829-3302

DORVAL, QUEBEC
95 RUE LINDSAY
DORVAL QUEBEC H9P 2S6
PHONE: 514-422-8818
FAX: 514-422-8982

MONTREAL, QUEBEC
1844 WILLIAM STREET
MONTREAL, QUEBEC H3J 1R5
PHONE: 514-933-2711
FAX: 514-933-8639

VANCOUVER,
BRITISH COLUMBIA
1538 KEBET WAY
PORT COQUITLAM,
BRITISH COLUMBIA V3C 5M5
PHONE 604-421-2822
FAX: 604-421-3113

WINNIPEG, MANITOBA
54 PRINCESS STREET
WINNIPEG, MANITOBA R3B 1K2
PHONE: 204-942-5205
FAX: 204-956-4251

AUSTRALIA
UNIT 3, 6 STANTON ROAD
SEVEN HILLS, NSW 2147, AUSTRALIA
PHONE: (61) (2) 9674 5455
FAX: (61) (2) 9674 2495

UNIT 8, 5 KELLETTS ROAD
ROWVILLE, VICTORIA, 3178
AUSTRALIA
PHONE: (61) (3) 9753 4355
FAX: (61) (3) 9753 4366

EL SALVADOR
RESIDENCIAL PINARES DE SUIZA
POL. 15 #44,
NVA. SAN SALVADOR, EL SALVADOR
PHONE: +503 2288-1519
FAX: +503 2288-1518

CHILE
LUIS THAYER OJEDA 166,
OF 402 - PROVIDENCIA
SANTIAGO, CHILE
PHONE: 56-2-290-0762
FAX: 56-2-290-0762

CHINA
ROOM NO. A-8421
JIAHUA BUSINESS CENTER
808 HONG QIAO ROAD
SHANGHAI 200030, CHINA
PHONE: (86-21) 6447 3060
FAX: (86-21) 6407 8620

UNIT 905, 9TH FLOOR,
TOWER B WANDA PLAZA
NO. 93 JIANGUO ROAD,
CHAOYANG DISTRICT
BEIJING, 100022, CHINA
PHONE +86 (010) 58205516
FAX +86 (010) 58204231

GERMANY
DIESELSTRASSE 22
D-85551 KIRCHHEIM
MUNICH, GERMANY
PHONE: +49 89 90 5080
FAX: +49 89 90 50 8492

HERMANN-HEINRICH-GOSSEN-STRASSE 3
D-50858 KÖLN, GERMANY
PHONE: 49 2234 37941 0
FAX: 49 2234 37941 64

INDIA
14, COMMERCE AVENUE
MAHAGANESH COLONY
PAUD ROAD
PUNE - 411038
MAHARASHTRA, INDIA
PHONE: 91 20 25452717, 25452718
FAX: 91 20 25452719

ITALY
BALDOR ASR AG
SUCCURSALE DI MENDRISIO
VIA BORROMINI, 20A
CH-6850 MENDRISIO
SWITZERLAND
PHONE: 0041 91 640 99 50
FAX: 0041 91 630 26 33

JAPAN
DIA BLDG 802,
2-21-1 TSURUYA-CHO,
KANAGAWA-KU
YOKOHAMA, 221-0835, JAPAN
PHONE: 81-45-412-4506
FAX: 81-45-412-4507

KOREA
ROOM 208-37
INCHEON INDUSTRIAL GOODS
CIRCULATING CENTER
SONGHYEON 3-DONG, DONG-GU
INCHEON. KOREA, 401-705
PHONE: (82) 32 588 3253
FAX: (82) 32 588 3254

MEXICO
LEON, GUANAJUATO
KM. 2.0 BLVD. AEROPUERTO
LEÓN 37545, GUANAJUATO, MÉXICO
PHONE: 52 477 761 2030
FAX: 52 477 761 2010

MIDDLE EAST & NORTH AFRICA
VSE INTERNATIONAL CORP.
P. O. BOX 5618
BUFFALO GROVE, IL 60089-5618
PHONE: 847 590 5547
FAX: 847 590 5587

SINGAPORE
51 KAKI BUKIT ROAD 2
K B WAREHOUSE COMPLEX
SINGAPORE 417863
PHONE: (65) 6744 2572
FAX: (65) 6747 1708

PANAMA
AVE. RICARDO J. ALFARO
EDIFICIO SUN TOWERS MALL
PISO 2, LOCAL 55
CIUDAD DE PANAMÁ, PANAMÁ
PHONE: +507 236-5155
FAX: +507 261-5355

SWITZERLAND
POSTFACH 73
SCHUTZENSTRASSE 59
CH-8245 FEUERTHALEN
SWITZERLAND
PHONE: +41 52 647 4700
FAX: +41 52 659 2394

TAIWAN
1F, NO 126 WENSHAN 3RD STREET,
NANTUN DISTRICT,
TAICHUNG CITY 408
TAIWAN R.O.C
PHONE: (886) 4 238 04235
FAX: (886) 4 238 04463

UNITED KINGDOM
6 BRISTOL DISTRIBUTION PARK
HAWKLEY DRIVE
BRISTOL BS32 0BF U.K.
PHONE: +44 1454 850000
FAX: +44 1454 859001

VENEZUELA
AV. ROMA. QTA EL MILAGRO. URB.
CALIFORNIA NORTE
CARACAS, 1070
VENEZUELA
PHONE: 58-414-114-8623
FAX: 58-412-322-5790

400-0207

BALDOR

BALDOR • DODGE • RELIANCE

BALDOR ELECTRIC COMPANY
World Headquarters
P.O. Box 2400 Fort Smith, AR 72901-2400
(479) 646-4711 Fax (479) 648-5792
www.baldor.com

© Baldor Electric Company
MN400

Printed in USA
2/07

Installation,
Operation, and
Maintenance Manual

3102

FLYGT
a xylem brand

Table of Contents

Introduction and Safety....3
Introduction....3
Safety....3
Safety terminology and symbols....3
Environmental safety....5
User safety....5
Ex-approved products....6
Product warranty....7

Transportation and Storage....9
Inspect the delivery....9
Inspect the package....9
Inspect the unit....9
Transportation guidelines....9
Precautions....9
Position and fastening....9
Lifting....9
Temperature ranges for transportation, handling and storage....10
Handling at freezing temperature....10
Unit in as-delivered condition....10
Lifting the unit out of liquid....10
Storage guidelines....11
Storage location....11
Long-term storage....11

Product Description....12
Pump design....12
Parts....13
Monitoring equipment....14
Optional sensors....14
The data plate....14
Approvals....15
Product approvals for hazardous locations....15
EN approval plate....15
IEC approval plate....16
FM approval plate....16
Product denomination....16

Installation....18
Install the pump....18
Authority regulation....18
Fasteners....18
Install with P-installation....19
Install with S-installation....20
Install with T/Z-installation....20
Install with F-installation....21
Install with X-installation....22
Make the electrical connections....23
General precautions....23
Requirements....23
Cables....24
Earthing (Grounding)....24

Connect the motor cable to the pump....24
Connect the motor cable to the starter and monitoring equipment....25
Cable charts....26
Check the impeller rotation....34

Operation....36
Precautions....36
Distance to wet areas....36
Noise level....36
Start the pump....36

Maintenance....38
Precautions....38
Maintenance guidelines....38
Torque values....39
Change the oil....39
Empty the oil....40
Fill with oil....41
Service the pump....41
Inspection....42
Major overhaul....43
Service in case of alarm....43
Replace the impeller....43
Replace the C- or D-impeller....44
Replace the F-impeller....48
Replace the M-impeller....52
Replace the N-impeller....56

Troubleshooting....59
Introduction....59
The pump does not start....59
The pump does not stop when a level sensor is used....60
The pump starts-stops-starts in rapid sequence....60
The pump runs but the motor protection trips....61
The pump delivers too little or no water....62

Technical Reference....64
Motor data....64
Application limits....64

Introduction and Safety

Introduction

Purpose of this manual

The purpose of this manual is to provide necessary information for:

- Installation
- Operation
- Maintenance

CAUTION:

Read this manual carefully before installing and using the product. Improper use of the product can cause personal injury and damage to property, and may void the warranty.

NOTICE:

Save this manual for future reference, and keep it readily available at the location of the unit.

Safety

WARNING:

- The operator must be aware of safety precautions to prevent physical injury.
- Any pressure-containing device can explode, rupture, or discharge its contents if it is over-pressurized. Take all necessary measures to avoid over-pressurization.
- Operating, installing, or maintaining the unit in any way that is not covered in this manual could cause death, serious personal injury, or damage to the equipment. This includes any modification to the equipment or use of parts not provided by Xylem. If there is a question regarding the intended use of the equipment, please contact an Xylem representative before proceeding.
- This manual clearly identifies accepted methods for disassembling units. These methods must be adhered to. Trapped liquid can rapidly expand and result in a violent explosion and injury. Never apply heat to impellers, propellers, or their retaining devices to aid in their removal.
- Do not change the service application without the approval of an authorized Xylem representative.

CAUTION:

You must observe the instructions contained in this manual. Failure to do so could result in physical injury, damage, or delays.

Safety terminology and symbols

About safety messages

It is extremely important that you read, understand, and follow the safety messages and regulations carefully before handling the product. They are published to help prevent these hazards:

- Personal accidents and health problems
- Damage to the product
- Product malfunction

Hazard levels

Hazard level	Indication
DANGER:	A hazardous situation which, if not avoided, will result in death or serious injury
WARNING:	A hazardous situation which, if not avoided, could result in death or serious injury
CAUTION:	A hazardous situation which, if not avoided, could result in minor or moderate injury
NOTICE:	• A potential situation which, if not avoided, could result in undesirable conditions • A practice not related to personal injury

Hazard categories

Hazard categories can either fall under hazard levels or let specific symbols replace the ordinary hazard level symbols.

Electrical hazards are indicated by the following specific symbol:

Electrical Hazard:

These are examples of other categories that can occur. They fall under the ordinary hazard levels and may use complementing symbols:

- Crush hazard
- Cutting hazard
- Arc flash hazard

Magnetic hazard

Magnetic hazards are indicated by a specific symbol that replaces the typical hazard level symbols:

CAUTION:

The Ex symbol

The Ex symbol indicates safety regulations for Ex-approved products when used in atmospheres that are potentially explosive or flammable.

Environmental safety

The work area

Always keep the station clean to avoid and/or discover emissions.

Waste and emissions regulations

Observe these safety regulations regarding waste and emissions:

- Appropriately dispose of all waste.
- Handle and dispose of the processed liquid in compliance with applicable environmental regulations.
- Clean up all spills in accordance with safety and environmental procedures.
- Report all environmental emissions to the appropriate authorities.

WARNING:

Do NOT send the product to the Xylem manufacturer if it has been contaminated by any nuclear radiation. Inform Xylem so that accurate actions can take place.

Electrical installation

For electrical installation recycling requirements, consult your local electric utility.

Recycling guidelines

Always recycle according to these guidelines:

1. Follow local laws and regulations regarding recycling if the unit or parts are accepted by an authorized recycling company.
2. If the first guideline is not applicable, then return the unit or parts to your Xylem representative.

User safety

General safety rules

These safety rules apply:

- Always keep the work area clean.
- Pay attention to the risks presented by gas and vapors in the work area.
- Avoid all electrical dangers. Pay attention to the risks of electric shock or arc flash hazards.
- Always bear in mind the risk of drowning, electrical accidents, and burn injuries.

Safety equipment

Use safety equipment according to the company regulations. Use this safety equipment within the work area:

- Hard hat
- Safety goggles, preferably with side shields
- Protective shoes
- Protective gloves
- Gas mask
- Hearing protection
- First-aid kit
- Safety devices

NOTICE:

Never operate a unit unless safety devices are installed. Also see specific information about safety devices in other chapters of this manual.

Electrical connections

Electrical connections must be made by certified electricians in compliance with all international, national, state, and local regulations. For more information about requirements, see sections dealing specifically with electrical connections.

Hazardous liquids

The product is designed for use in liquids that can be hazardous to your health. Observe these rules when you work with the product:

- Make sure that all personnel who work with biologically hazardous liquids are vaccinated against diseases to which they may be exposed.
- Observe strict personal cleanliness.

Wash the skin and eyes

Follow these procedures for chemicals or hazardous fluids that have come into contact with your eyes or your skin:

Condition	Action
Chemicals or hazardous fluids in eyes	1. Hold your eyelids apart forcibly with your fingers. 2. Rinse the eyes with eyewash or running water for at least 15 minutes. 3. Seek medical attention.
Chemicals or hazardous fluids on skin	1. Remove contaminated clothing. 2. Wash the skin with soap and water for at least 1 minute. 3. Seek medical attention, if necessary.

Ex-approved products

Follow these special handling instructions if you have an Ex-approved unit.

Personnel requirements

These are the personnel requirements for Ex-approved products in potentially explosive atmospheres:

- All work on the product must be carried out by certified electricians and Xylem-authorized mechanics. Special rules apply to installations in explosive atmospheres.
- All users must know about the risks of electric current and the chemical and physical characteristics of the gas, the vapor, or both present in hazardous areas.
- Any maintenance for Ex-approved products must conform to international and national standards (for example, IEC/EN 60079-17).

Xylem disclaims all responsibility for work done by untrained and unauthorized personnel.

Product and product handling requirements

These are the product and product handling requirements for Ex-approved products in potentially explosive atmospheres:

- Only use the product in accordance with the approved motor data.
- The Ex-approved product must never run dry during normal operation. Dry running during service and inspection is only permitted outside the classified area.
- Before you start work on the product, make sure that the product and the control panel are isolated from the power supply and the control circuit, so they cannot be energized.
- Do not open the product while it is energized or in an explosive gas atmosphere.
- Make sure that thermal contacts are connected to a protection circuit according to the approval classification of the product, and that they are in use.
- Intrinsically safe circuits are normally required for the automatic level-control system by the level regulator if mounted in zone 0.

- The yield stress of fasteners must be in accordance with the approval drawing and the product specification.
- Do not modify the equipment without approval from an authorized Xylem representative.
- Only use parts that are provided by an authorized Xylem representative.

Guidelines for compliance

Compliance is fulfilled only when you operate the unit within its intended use. Do not change the conditions of the service without the approval of an Xylem representative. When you install or maintain explosion proof products, always comply with the directive and applicable standards (for example, IEC/EN 60079–14).

Minimum permitted liquid level

See the dimensional drawings of the product for the minimum permitted liquid level according to the approval for explosion proof products. If the information is missing on the dimensional drawing, the product must be fully submerged. Level-sensing equipment must be installed if the product can be operated at less than the minimum submersion depth.

Monitoring equipment

For additional safety, use condition-monitoring devices. Condition-monitoring devices include but are not limited to the following:

- Level indicators
- Temperature detectors

Product warranty

Coverage

Xylem undertakes to remedy faults in products from Xylem under these conditions:

- The faults are due to defects in design, materials, or workmanship.
- The faults are reported to an Xylem representative within the warranty period.
- The product is used only under the conditions described in this manual.
- The monitoring equipment incorporated in the product is correctly connected and in use.
- All service and repair work is done by Xylem-authorized personnel.
- Genuine Xylem parts are used.
- Only Ex-approved spare parts and accessories authorized by Xylem are used in Ex-approved products.

Limitations

The warranty does not cover faults caused by these situations:

- Deficient maintenance
- Improper installation
- Modifications or changes to the product and installation made without consulting Xylem
- Incorrectly executed repair work
- Normal wear and tear

Xylem assumes no liability for these situations:

- Bodily injuries
- Material damages
- Economic losses

Warranty claim

Xylem products are high-quality products with expected reliable operation and long life. However, should the need arise for a warranty claim, then contact your Xylem representative.

Spare parts

Xylem guarantees that spare parts will be available for 15 years after the manufacture of this product has been discontinued.

Transportation and Storage

Inspect the delivery

Inspect the package

1. Inspect the package for damaged or missing items upon delivery.
2. Note any damaged or missing items on the receipt and freight bill.
3. File a claim with the shipping company if anything is out of order.
   If the product has been picked up at a distributor, make a claim directly to the distributor.

Inspect the unit

1. Remove packing materials from the product.
   Dispose of all packing materials in accordance with local regulations.
2. Inspect the product to determine if any parts have been damaged or are missing.
3. If applicable, unfasten the product by removing any screws, bolts, or straps.
   For your personal safety, be careful when you handle nails and straps.
4. Contact your sales representative if anything is out of order.

Transportation guidelines

Precautions

WARNING:
- Stay clear of suspended loads.
- Observe accident prevention regulations in force.

Position and fastening

The unit can be transported either horizontally or vertically. Make sure that the unit is securely fastened during transportation, and cannot roll or fall over.

Lifting

WARNING:
- Crush hazard. The unit and the components can be heavy. Use proper lifting methods and wear steel-toed shoes at all times.
- Lift and handle the product carefully, using suitable lifting equipment.
- The product must be securely harnessed for lifting and handling. Use eyebolts or lifting lugs if available.
- Always lift the unit by its lifting handle. Never lift the unit by the motor cable or by the hose.
- Do not attach sling ropes to shaft ends.

Lifting equipment

Lifting equipment is always required when handling the unit. It must fulfill the following requirements:

- The minimum height (contact Xylem for information) between the lifting hook and the floor must be sufficient to lift the unit.
- The lifting equipment must be able to hoist the unit straight up and down, preferably without the need for resetting the lifting hook.
- The lifting equipment must be securely anchored and in good condition.
- The lifting equipment must support weight of the entire assembly and must only be used by authorized personnel.
- Two sets of lifting equipment must be used to lift the unit for repair work.
- The lifting equipment must be dimensioned to lift the unit with any remaining pumped media in it.
- The lifting equipment must not be oversized.

NOTICE:

Oversized lifting equipment could cause damage if the unit should stick when being lifted.

Temperature ranges for transportation, handling and storage

Handling at freezing temperature

At temperatures below freezing, the product and all installation equipment, including the lifting gear, must be handled with extreme care.

Make sure that the product is warmed up to a temperature above the freezing point before starting up. Avoid rotating the impeller/propeller by hand at temperatures below the freezing point. The recommended method to warm the unit up is to submerge it in the liquid which will be pumped or mixed.

NOTICE:

Never use a naked flame to thaw the unit.

Unit in as-delivered condition

If the unit is still in the condition in which it left the factory - all packing materials are undisturbed - then the acceptable temperature range during transportation, handling and storage is: –50°C (–58°F) to +60°C (+140°F).

If the unit has been exposed to freezing temperatures, then allow it to reach the ambient temperature of the sump before operating.

Lifting the unit out of liquid

The unit is normally protected from freezing while operating or immersed in liquid, but the impeller/propeller and the shaft seal may freeze if the unit is lifted out of the liquid into a surrounding temperature below freezing.

Units equipped with an internal cooling system are filled with a mixture of water and 30% glycol. This mixture remains a flowing liquid at temperatures down to –13°C (9°F). Below –13°C (9°F), the viscosity increases such that the glycol mixture will lose its flow properties. However, the glycol-water mixture will not solidify completely and thus cannot harm the product.

Follow these guidelines to avoid freezing damage:

1. Empty all pumped liquid, if applicable.
2. Check all liquids used for lubrication or cooling, both oil and water-glycol mixtures, for the presence of water. Change if needed.

Storage guidelines

Storage location

The product must be stored in a covered and dry location free from heat, dirt, and vibrations.

NOTICE:

- Protect the product against humidity, heat sources, and mechanical damage.
- Do not place heavy weights on the packed product.

Long-term storage

If the unit is stored more than 6 months, the following apply:

- Before operating the unit after storage, it must be inspected with special attention to the seals and the cable entry.
- The impeller/propeller must be rotated every other month to prevent the seals from sticking together.

Product Description

Pump design

The pump is submersible, and driven by an electric motor.

For a list of pump version and corresponding motor type, see *Motor data* (page 64).

Intended use

The product is intended for moving waste water, sludge, raw and clean water. Always follow the limits given in *Application limits* (page 64). If there is a question regarding the intended use of the equipment, please contact an Xylem representative before proceeding.

WARNING:

In explosive or flammable environments, only use Ex- or MSHA-approved pumps.

NOTICE:

Do NOT use the pump in highly corrosive liquids.

Spare parts

- Modifications to the unit or installation should only be carried out after consulting with Xylem.
- Original spare parts and accessories authorized by Xylem are essential for compliance. The use of other parts can invalidate any claims for warranty or compensation. For more information contact your Xylem representative.

Pressure class

LT	Low head
MT	Medium head
HT	High head
SH	Super high head

Parts

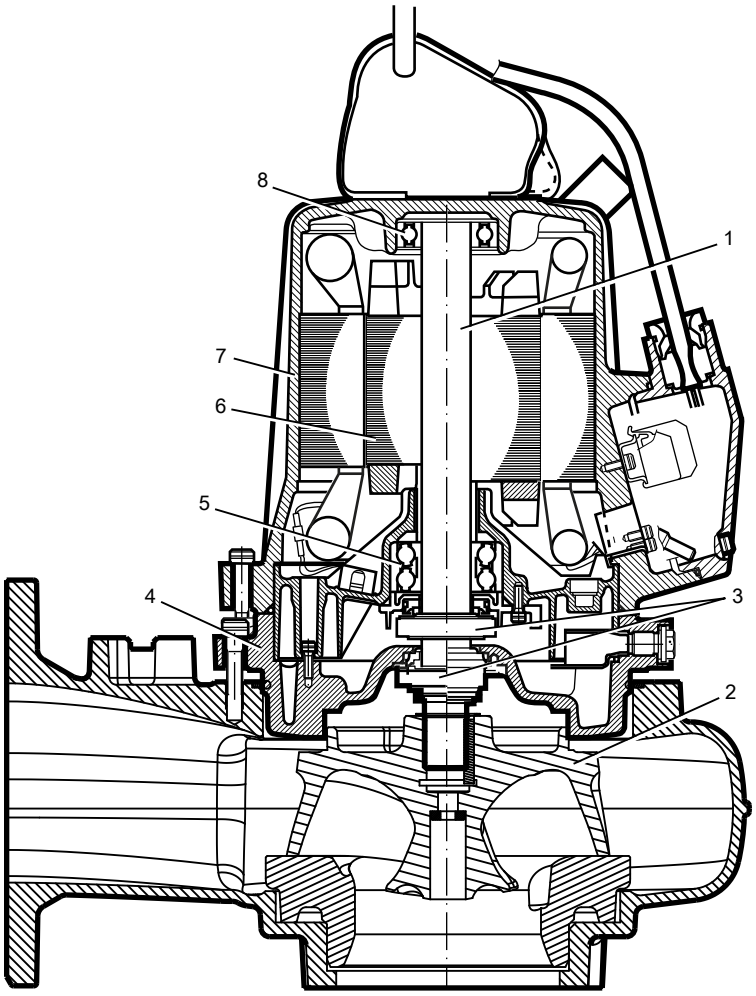

Position	Part	Description
1	Shaft	The shaft is made of stainless steel, with an integrated rotor.
2	Impeller	There are multiple types of impellers. For information about the pumps impellers, see Parts List.
3	Mechanical seals	One inner and one outer seal in a combination of materials: • Aluminium oxide Al_2O_3 • Silicon carbide RSiC • Corrosion-resistant cemented carbide WCCR For information about the pumps mechanical seals, see Parts List.
4	Oil housing	The oil housing includes a coolant that lubricates and cools the seals; the housing acts as a buffer between the pumped fluid and the drive unit.
5	Main bearing	The bearing consisting of a two-row angular contact ball bearing.
6	Motor	For information about the motor, see *Motor data* (page 64).
7	Stator housing	The pump is cooled by the ambient liquid/air.
8	Support bearing	The bearing consisting of a single-row ball bearing.

Monitoring equipment

The following applies to the monitoring equipment of the pump:

- The stator incorporates three thermal contacts connected in series that activate the alarm and stops the pump at overtemperature
- The thermal contacts open at 125°C (257°F).
- Ex-approved pumps must have thermal contacts connected to the control panel.
- The sensors must be connected to either the MiniCAS II monitoring equipment or an equivalent equipment.
- The monitoring equipment must be of a design that makes automatic restart impossible.
- Information in the junction box shows if the pump is equipped with optional sensors.

Optional sensors

FLS FLS is a miniature float switch for detection of liquid in the stator housing. Due to its design it is best suited for pumps in a vertical position. The FLS sensor is installed in the bottom of the stator housing.

CLS CLS is a sensor for detection of water in the oil housing. The sensor initiates an alarm when the oil contains approximately 35% water. The sensor is installed in the bearing housing/bearing holder with its sensing part in the oil housing. The CLS sensor is not applicable to Ex-approved pumps.

NOTICE:
The CLS sensor body is made of glass. Handle the sensor with care.

One CLS and one FLS sensor can be used in the same pump, if they are connected in parallel.

The data plate

The data plate is a metal label located on the main body of the products. The data plate lists key product specifications. Specially approved products also have an approval plate.

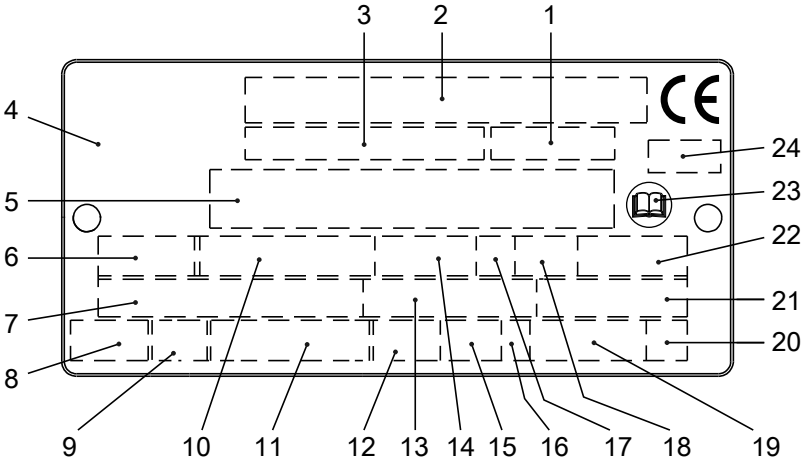

1. Curve code/Propeller code
2. Serial number, see *Product denomination* (page 16)
3. Product number
4. Country of origin
5. Additional information
6. Phase; type of current; frequency
7. Rated voltage

8. Thermal protection
9. Thermal class
10. Rated shaft power
11. International standard
12. Degree of protection
13. Rated current
14. Rated speed
15. Maximum submergence
16. Direction of rotation: L=left, R=right
17. Duty class
18. Duty factor
19. Product weight
20. Locked rotor code letter
21. Power factor
22. Maximum ambient temperature
23. Read installation manual
24. Notified body. Only for EN-approved Ex-products

Figure 1: The data plate

Approvals

Product approvals for hazardous locations

Pump	Approval
• 3102.090 • 3102.095 • 3102.190 • 3102.810 • 3102.830 • 3102.890 • 3102.910	European Norm (EN) • ATEX Directive • EN 60079-0, EN 60079-1, EN 1127-1 • Ex II 2 G Ex d IIB T4
	EN approval for cable entry: • Certificate number: INERIS 02ATEX9008 U • Ex II 2 G Ex d IIC or I M2 Ex d I
	IEC • IECEx scheme • IEC 60079–0, IEC 60079–1 • Ex d IIB T4
	Factory Mutural (FM) • Class I. Div 1. Group C and D • Dust ignition proof for use in Class II. Div 1. Group E, F and G • Suitable for use in Class III. Div 1. Hazardous Locations

EN approval plate

This illustration describes the EN approval plate and the information contained in its fields.

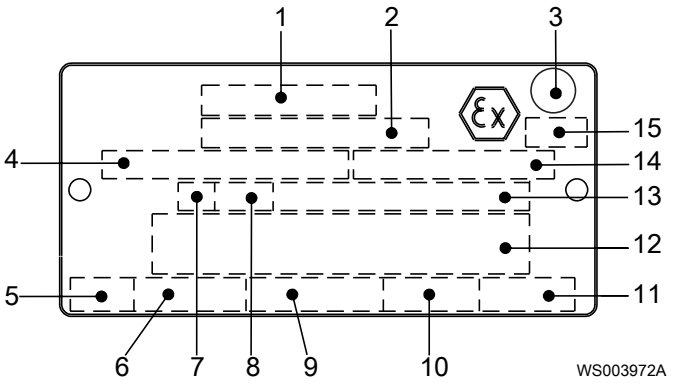

1. Approval
2. Approval authority + approval number
3. Approval for Class I
4. Approved drive unit
5. Stall time
6. Starting current/Rated current
7. Duty class
8. Duty factor
9. Input power
10. Rated speed
11. Controller
12. Additional information
13. Maximum ambient temperature
14. Serial number
15. ATEX marking

IEC approval plate

This illustration describes the IEC approval plate and the information contained in its fields. International Norm; not for EU member countries.

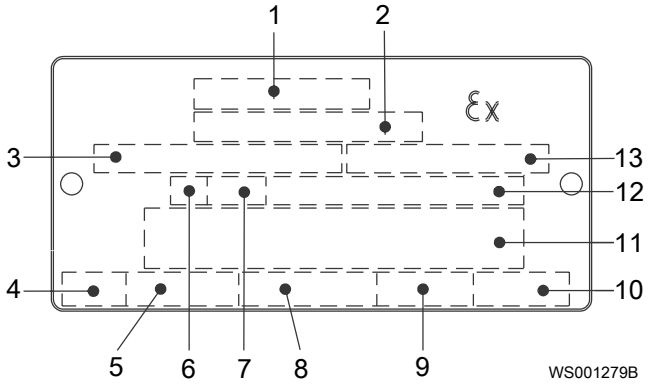

1. Approval
2. Approval authority + approval number
3. Approved for drive unit
4. Stall time
5. Starting current/Rated current
6. Duty class
7. Duty factor
8. Input power
9. Rated speed
10. Controller
11. Additional information
12. Max. ambient temperature
13. Serial number

FM approval plate

This illustration describes the FM approval plate and the information contained in its fields.

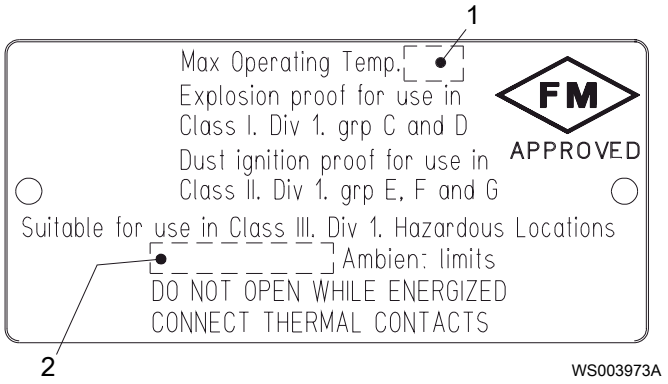

1. Temperature class
2. Maximum ambient temperature

Product denomination

Sales denomination

The sales denomination consists of the four-digit sales code and two letters that indicate the hydraulic end and type of installation.

This is an example of a sales denomination, and an explanation of its parts.

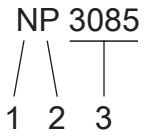

1. Hydraulic part
2. Installation type
3. Sales code

Product code

The product code consists of nine characters divided into two parts.

This is an example of a product code, and an explanation of its parts.

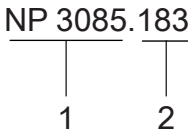

1. Sales denomination
2. Version

Serial number

The serial number is used for identification of an individual product, and is divided into four parts.

This is an example of a serial number, and an explanation of its parts.

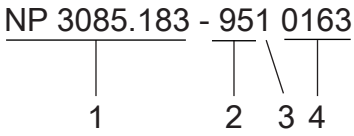

1. Product code
2. Production year
3. Production cycle
4. Running number

Installation

Install the pump

WARNING:
- Before installing the pump, check that the cable and cable entry have not been damaged during transportation.
- Note that special rules apply to installation in explosive atmospheres.
- Make sure that the unit cannot roll or fall over and injure people or damage property.
- Do not install CSA-approved products in locations that are classified as hazardous in the national electric code, ANSI/NFPA 70-2005.
- Do not install the starter equipment in an explosive zone unless it is explosion-proof rated.

WARNING:
A permanent-magnet motor generates voltage when the shaft is rotating. Ensure that the shaft can not rotate before performing any electrical installation.

NOTICE:
- Do not run the pump dry.
- Never force piping to make a connection with a pump.
- Always remove all debris and waste material from the sump, inlet piping, and discharge connection, before you install the pump.

These requirements apply:
- Use the pump dimensional drawing in order to ensure proper installation.
- Provide a suitable barrier around the work area, for example, a guard rail.
- Check the explosion risk before you weld or use electric hand tools.
- If the unit has a permanent magnet motor, ensure that you have read and understood all safety instructions regarding permanent magnet motors.

Authority regulation

Vent the tank of a sewage machine station in accordance with local plumbing codes.

Fasteners

WARNING:
- Only use fasteners of the proper size and material.
- Replace all corroded fasteners.
- Make sure that all fasteners are properly tightened and that there are no missing fasteners.

Install with P-installation

In the P-installation, the pump is installed on a stationary discharge connection, and operates either completely or partially submerged in the pumped liquid. These requirements and instructions only apply when the installation is made according to the dimensional drawing.

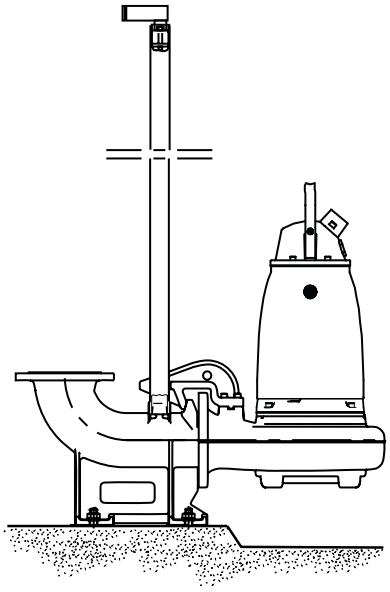

Figure 2: P-installation

These items are required:

- Guide bars
- Guide bar bracket for attaching the guide equipment to the access frame or to the upper part of the sump
- Cable holder for holding the cable
- Access frame (with covers) to which the upper guide bar bracket and cable holder can be attached
- Discharge connection for connecting the pump to the discharge line

  The discharge connection has a flange which fits the pump casing flange and a bracket for attaching the guide equipment.
- Fasteners for the discharge connection
- Anchor bolts

1. Install the access frame:
   a) Place the access frame in position and align it horizontally.
   b) Grout the frame in place.
2. Grout the anchor bolts in place.

   Be careful when you align and position the discharge connection in relation to the access frame.
3. Place the discharge connection in position, and tighten the nuts.
4. Install the guide bars:
   a) Secure the guide bars in the bracket.
   b) Check that the guide bars are placed vertically. Use a level or a plumb line.
5. Connect the discharge pipe to the discharge connection.
6. Lower the pump along the guide bars.

   When it reaches the bottom position, the pump automatically connects to the discharge connection.

7. Secure the motor cable:
   a) Fasten the permanent lifting device to the pump and to the access frame. For example, you can use a stainless-steel lifting chain with shackles.
   b) Fasten the cable to the cable holder.

      Make sure that the cable cannot be sucked into the pump inlet or that it is neither sharply bent, or pinched. Support straps are required for deep installations.
   c) Connect the motor cable and the starter and monitoring equipment according to the separate instructions.

      Make sure that the impeller rotation is correct. For more information, see *Check the impeller rotation* (page 34).

Clean all debris from the sump before starting the pump.

Install with S-installation

In the S-installation, the pump is transportable and intended to operate either completely or partially submerged in the pumped liquid. The pump is equipped with a connection for hose or pipe and stands on a base stand.

These requirements and instructions only apply when the installation is made according to the dimensional drawing. For information about the different installation types, see Parts List.

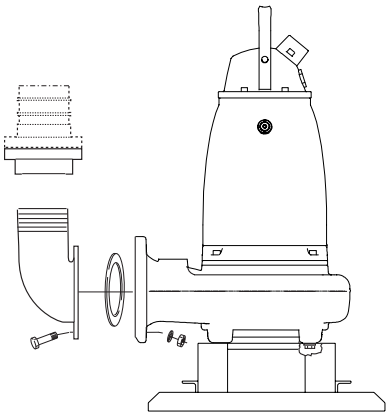

Figure 3: S-installation

1. Run the cable so that it has no sharp bends. Make sure that it is not pinched, and cannot be sucked into the pump inlet.
2. Connect the discharge line.
3. Lower the pump into the sump.
4. Place the pump on the base and make sure it cannot fall over or sink.

   Alternatively, the pump can be suspended with a lifting chain just above the sump bottom. Make sure that the pump cannot rotate at startup or during operation.
5. Connect the motor cable and the starter and monitoring equipment according to the separate instructions.

   Make sure that the impeller rotation is correct. For more information, see *Check the impeller rotation* (page 34).

Install with T/Z-installation

This installation is not applicable for these versions:

- 170
- 890

In the T-installation, the pump is installed in a vertical position in a dry well next to the wet sump. These requirements and instructions only apply when the installation is made according to the dimensional drawing.

In the Z-installation, the pump is installed in a horizontal position on a support stand in a dry well next to the wet sump. The following requirements and instructions are for Z-installations that comply to the dimensional drawing.

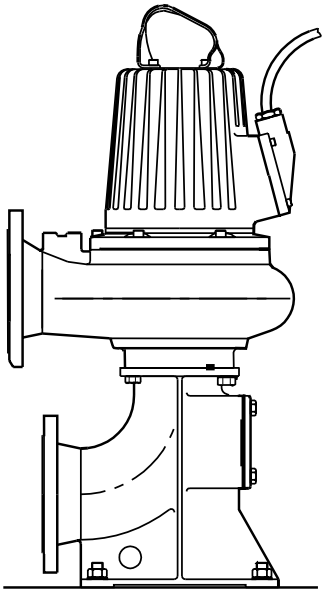

Figure 4: T-installation

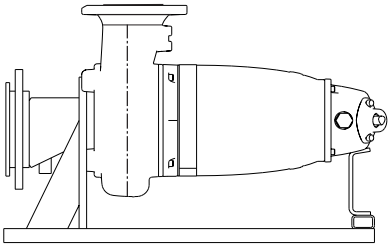

Figure 5: Z-installation

These items are required:

- Anchor bolts for anchoring the pump to a base.
- Shut-off valves that allow you to remove the pump from service

NOTICE:

The risk of freezing is particularly high in T- or Z-installations.

1. Fasten the pump:
   a) Bolt the stationary suction connection to the concrete base.
   b) Bolt the pump to the suction connection.
2. Make sure that the pump is vertical for the T-installation or horizontal for the Z-installation.
3. Connect the suction line and discharge line.
4. Connect the motor cable and the starter and monitoring equipment according to the separate instructions.

   Make sure that the impeller rotation is correct. For more information, see *Check the impeller rotation* (page 34).
5. Make sure that the weight of the pump does not put strain on the piping.

Install with F-installation

In the F-installation, the pump is free standing and installed primarily in a small sump on a firm surface. The pump is intended to operate completely or partially submerged in the pumped liquid. The pump is equipped with a connection for hose or pipe and with supporting legs and/or a strainer. These requirements and instructions are for F-installations that comply to the dimensional drawing.

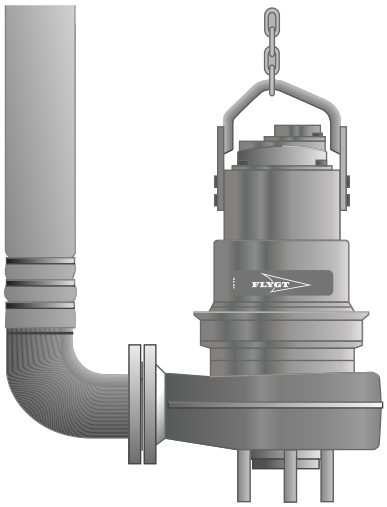

Figure 6: F-installation

These items are required:

- Nipple pipe/Flange/Coupling
- Pipe or hose

1. Run the cable so that is has no sharp bends, is not pinched, and cannot be sucked into the pump inlet.
2. Fit the nipple pipe/flange/coupling.
3. Lower the pump into the sump.
4. Place the pump on the sump bottom and make sure it cannot fall over.
5. Connect the motor cable and the starter and monitoring equipment according to the separate instructions.

   Make sure that the impeller rotation is correct. For more information, see *Check the impeller rotation* (page 34).

Install with X-installation

In the X-installation, the pump has no pre-determined mechanical connection. The flange is drilled.

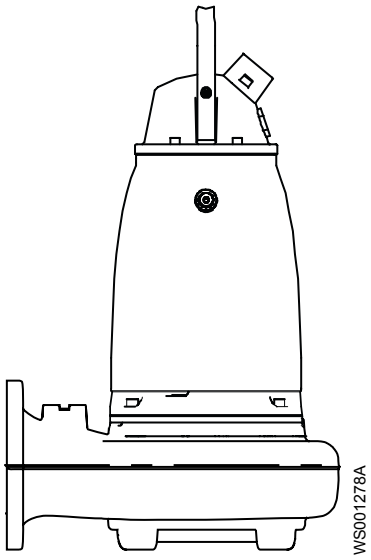

Figure 7: X-installation

NOTICE:

A pump prepared for X-installation is only approved to be used in P- or S-installation. Never use it in T- or Z-installation

For installation instructions, see appropriate mechanical accessories.

Make the electrical connections

General precautions

Electrical Hazard:

- A certified electrician must supervise all electrical work. Comply with all local codes and regulations.
- Before starting work on the unit, make sure that the unit and the control panel are isolated from the power supply and cannot be energized. This applies to the control circuit as well.
- Leakage into the electrical parts can cause damaged equipment or a blown fuse. Keep the end of the motor cable above the liquid level.
- Make sure that all unused conductors are insulated.
- There is a risk of electrical shock or explosion if the electrical connections are not correctly carried out or if there is fault or damage on the product.
- A permanent-magnet motor generates voltage when the shaft is rotating. Ensure that the shaft can not rotate before performing any electrical installation.

WARNING:

Do not install the starter equipment in an explosive zone unless it is explosion-proof rated.

CAUTION:

If the pump is equipped with automatic level control and/or internal contactor, there is a risk of sudden restart.

Requirements

These general requirements apply for electrical installation:

- The supply authority must be notified before installing the pump if it will be connected to the public mains. When the pump is connected to the public power supply, it may cause flickering of incandescent lamps when started.
- The mains voltage and frequency must agree with the specifications on the data plate. If the pump can be connected to different voltages, then the connected voltage is specified by a yellow sticker close to the cable entry.
- The fuses and circuit breakers must have the proper rating, and the pump overload protection (motor protection breaker) must be connected and set to the rated current according to the data plate and if applicable the cable chart. The starting current in direct-on-line start can be up to six times higher than the rated current.
- The fuse rating and the cables must be in accordance with the local rules and regulations.
- If intermittent operation is prescribed, then the pump must be provided with monitoring equipment supporting such operation.
- If stated on the data plate, then the motor is convertible between different voltages.

- The thermal contacts/thermistors must be in use.
- For FM-approved pumps, FLS must be connected and in use in order to meet approval requirements.

Cables

These are the requirements to follow when you install cables:

- The cables must be in good condition, not have any sharp bends, and not be pinched.
- The sheathing must not be damaged and must not have indentations or be embossed (with markings, etc.) at the cable entry.
- The cable entry seal sleeve and washers must conform to the outside diameter of the cable.
- The minimum bending radius must not be below the accepted value.
- If using a cable which has been used before, a short piece must be peeled off when refitting it so that the cable entry seal sleeve does not close around the cable at the same point again. If the outer sheath of the cable is damaged, then replace the cable. Contact an Xylem service shop.
- The voltage drop in long cables must be taken into account. The drive unit's rated voltage is the voltage measured at the cable connection point in the pump.
- The screened cable must be used according to the European CE requirements if a Variable Frequency Drive (VFD) is used. For more information, contact your Xylem representative (VFD-supplier).

Earthing (Grounding)

Electrical Hazard:

- You must earth (ground) all electrical equipment. This applies to the pump equipment, the driver, and any monitoring equipment. Test the earth (ground) lead to verify that it is connected correctly.
- If the motor cable is jerked loose by mistake, the earth (ground) conductor should be the last conductor to come loose from its terminal. Make sure that the earth (ground) conductor is longer than the phase conductors. This applies to both ends of the motor cable.
- Risk of electrical shock or burn. You must connect an additional earth- (ground-) fault protection device to the earthed (grounded) connectors if persons are likely to come into physical contact with the pump or pumped liquids.

Connect the motor cable to the pump

CAUTION:

Leakage into the electrical parts can cause damaged equipment or a blown fuse. Keep the end of the motor cable above the liquid level.

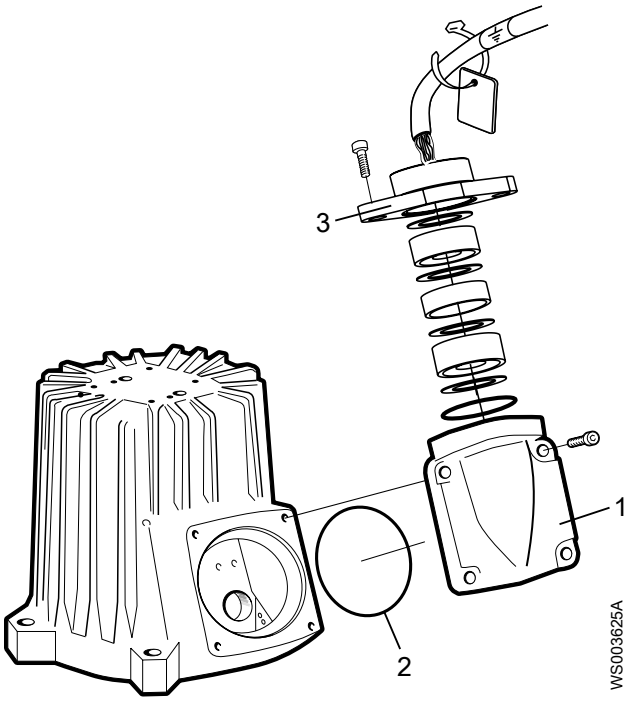

1. Entrance cover
2. O-ring
3. Entrance flange

1. Remove the entrance cover and the O-ring from the stator housing.

   This provide access to the terminal board/closed end splices.
2. Check the data plate to see which connections are required for the power supply.
3. Arrange the connections on the terminal board/closed end splices in accordance with the required power supply.
4. Connect the mains leads (L1, L2, L3, and earth (ground)) according to applicable cable chart.

   The earth (ground) lead must be 50 mm (2.0 in.) longer than the phase leads in the junction box of the unit.
5. Make sure that the pump is correctly connected to earth (ground).
6. Make sure that any thermal contacts incorporated in the pump are properly connected to the terminal block/closed end splices.
7. Install the entrance cover and the O-ring on the stator housing.
8. Fasten the screws on the entrance flange so that the cable insertion assembly bottoms out.

Connect the motor cable to the starter and monitoring equipment

WARNING:

Do not install the starter equipment in an explosive zone unless it is explosion-proof rated.

NOTICE:

- Thermal contacts are incorporated in the pump.
- Thermal contacts must never be exposed to voltages higher than 250 V, breaking current maximum 4 A. It is recommended that they are connected to 24 V over separate fuses to protect other automatic equipment.

The single phase pumps must be equipped with a starter which has start and run capacitors.

A specially Flygt designed starter is required for the operation of single phase pumps. The connection of the motor cable to the starter is shown in the wiring diagram.

1. If thermal contacts are included in the pump installation, connect the T1 and T2 control conductors to the monitoring equipment.

   Do not connect the T1 and T2 leads to thermal contacts if the temperature of the pumped liquid is above 40°C (104°F).

   NOTICE:

   Ex-approved products must always have the thermal contacts connected irrespective of the ambient temperature.

2. Connect the mains leads (L1, L2, L3, and earth [ground]) to the starter equipment.

   For information about the phase sequence and the color codes of the leads, see *Cable charts*.

3. Ensure that the warning label is attached to the cable end. In case the label is missing, attach the spare label to the cable end.

   The label is delivered with the pump.

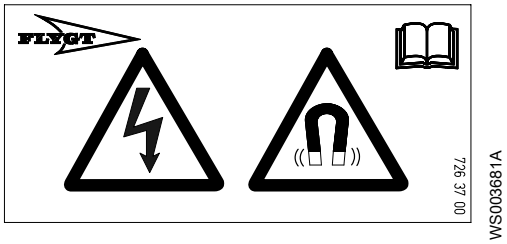

4. Check the functionality of the monitoring equipment:

   a) Check that the signals and the tripping function work properly.

   b) Check that the relays, lamps, fuses, and connections are intact.

   Replace any defective equipment.

Cable charts

Description

This topic contains general connection information. It also provides cable charts that show connection alternatives for use with different cables and power supply.

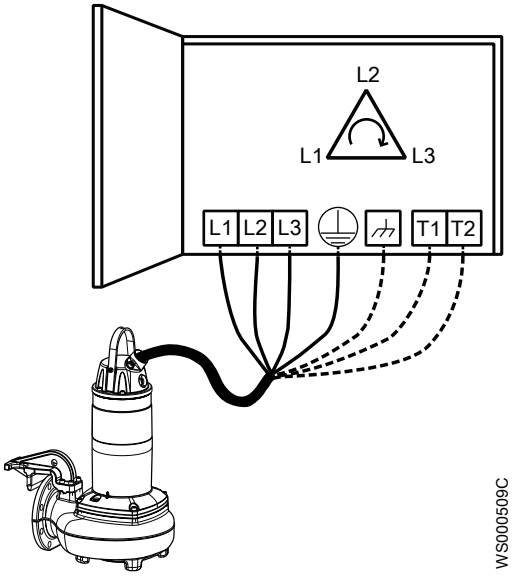

Figure 8: Phase sequence

Connection locations

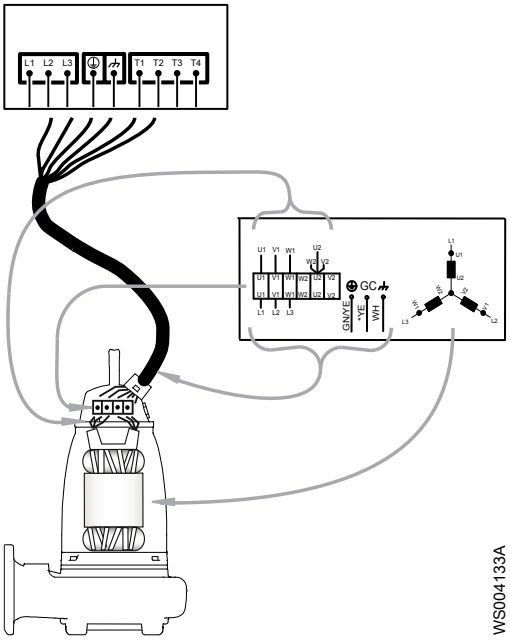

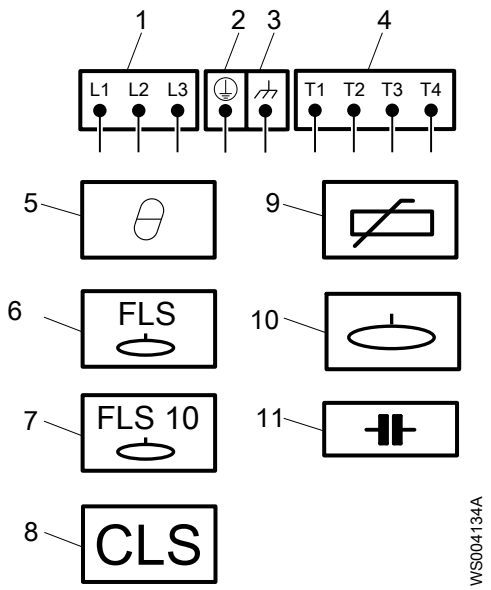

1. Starter equipment and mains leads (L1, L2, L3)
2. Earth (ground)
3. Functional ground
4. Control leads (T1, T2, T3, T4)
5. Thermal contact
6. FLS
7. FLS 10
8. CLS
9. Thermistor
10. Level sensor
11. Capacitor

Color code standard

Code	Description
BN	Brown
BK	Black
WH	White
OG	Orange
GN	Green
GNYE	Green-Yellow
RD	Red
GY	Grey
BU	Blue
YE	Yellow

Colors and markings of leads

Motor connection

Colours and marking of main leads

COLOUR STANDARD
BN=Brown
BK=Black
WH=White
OG=Orange
GN=Green
GN/YE=Green-Yellow
RD=Red
GY=Grey
BU=Blue
YE=Yellow

STATOR LEADS
U1,U5 RD
U2,U6 GN
V1,V5 BN
V2,V6 BU
W1,W5 YE
W2,W6 BK
T1,T2 WH/YE

*SUBCAB AWG
* * Ground Conductor is stranded around cores
GC=Ground Check

772 17 00/1

Mains 1~	Mains 3~	SUBCAB 7GX Screenflex 7GX	SUBCAB 4GX Screenflex 4GX	SUBCAB AWG	SUBCAB Screened
1	L1	BK 1	BN	RD	BN
2	L2	BK 2	BK	BK	BK
3	L3	BK 3	GY	WH	GY
	L1	BK 4	–	–	–
	L2	BK 5	–	–	–
	L3	BK 6	–	–	–
⏚		GN/YE	GN/YE	GN/YE	**Screen/PE from cores
⏚		Screen (WH)	Screen (WH)	–	Screen (WH)
GC		–	–	YE	–

WS004125A

For markings on sensor leads, see *Sensors connection* (page 33).

Connections included

- *3-phase connection* (page 29)
- *1-phase connection* (page 31)

- *Sensors connection* (page 33)
- *Screened cable connection* (page 32)

3-phase connection

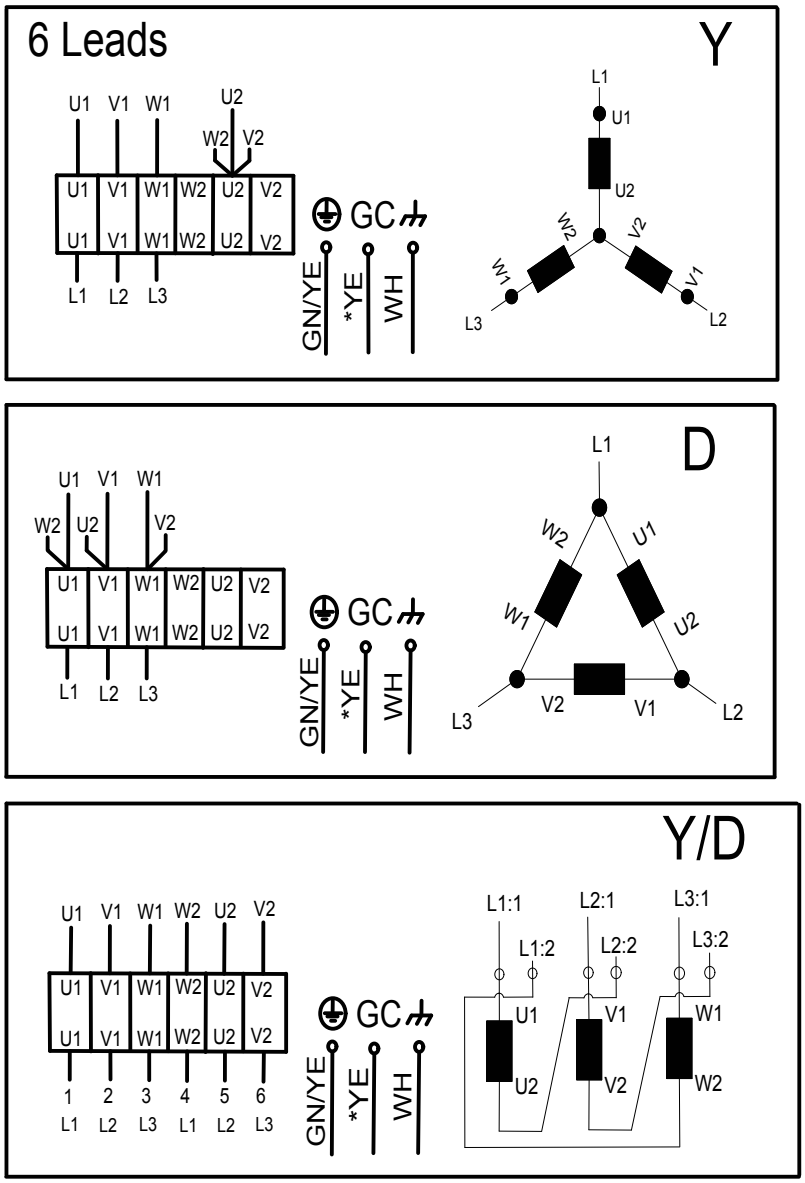

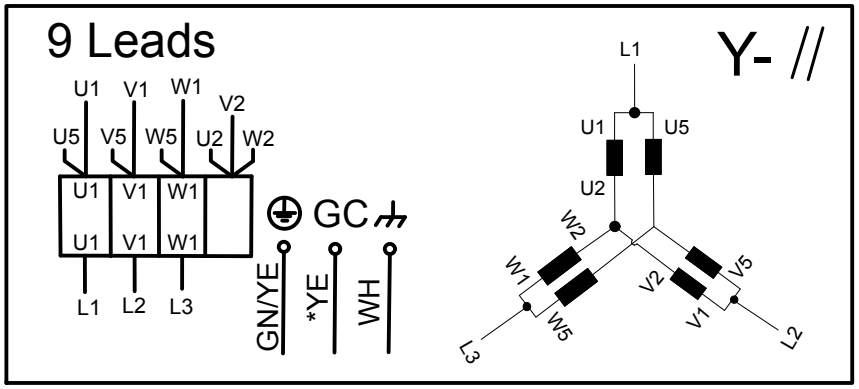

WS004127A

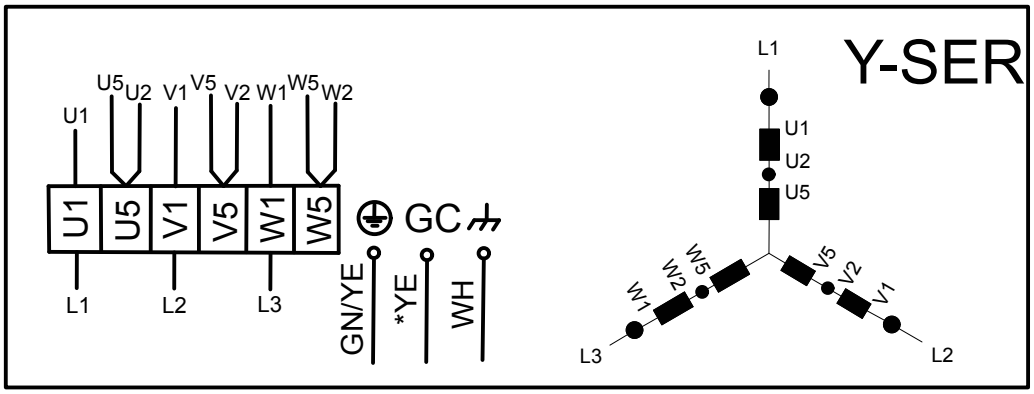

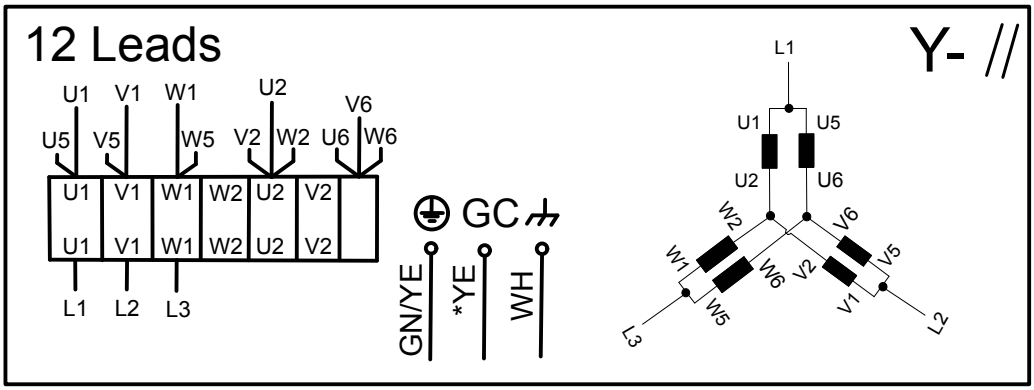

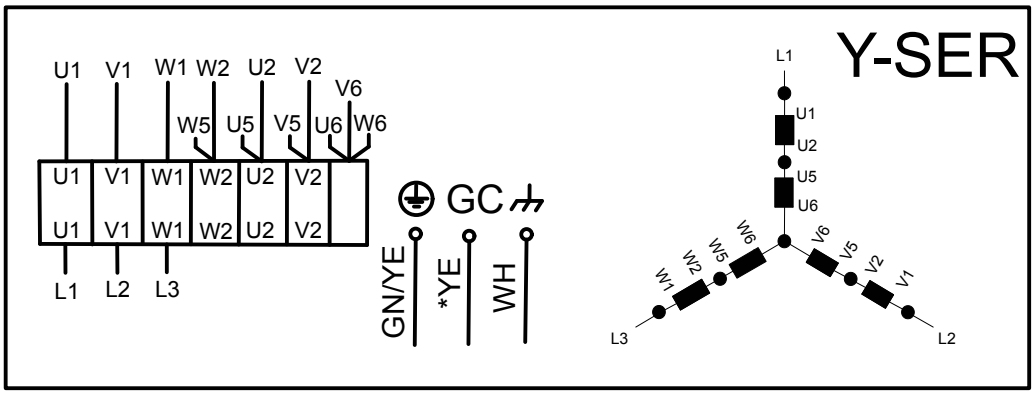

WS004128A

1-phase connection

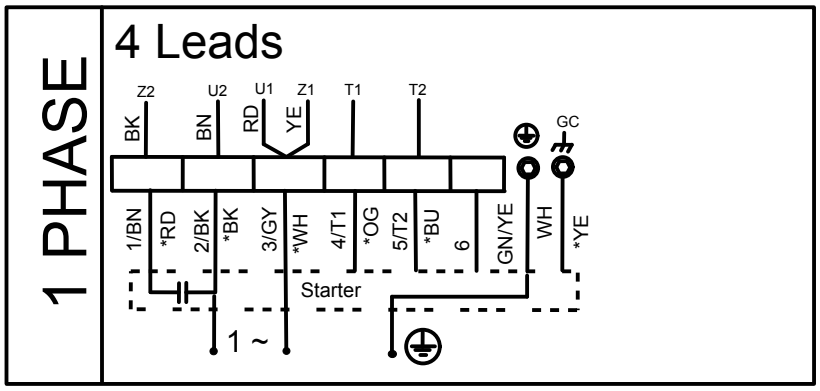

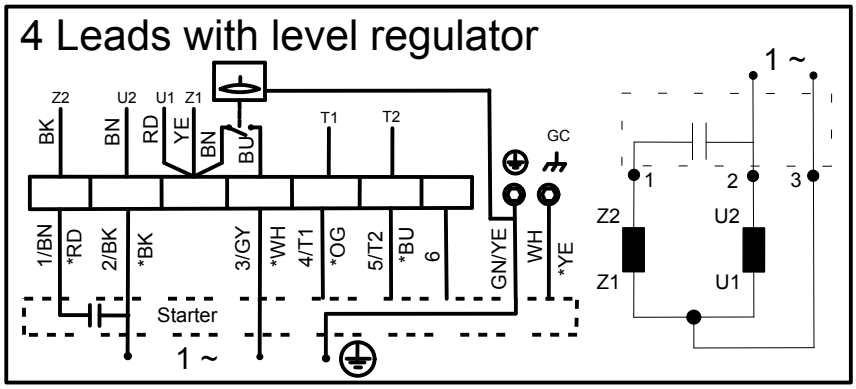

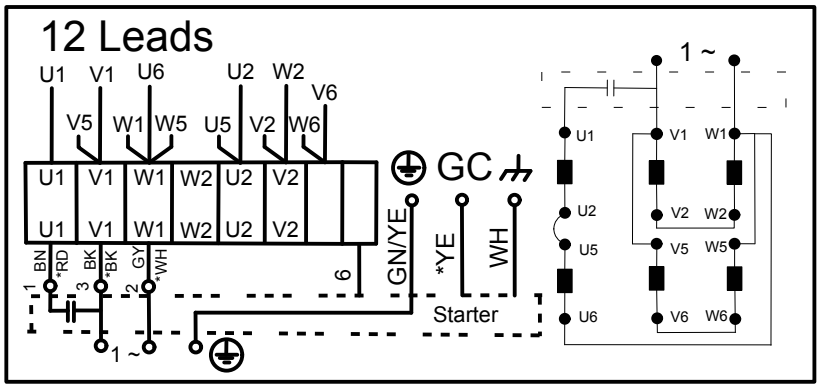

WS004129A

Screened cable connection

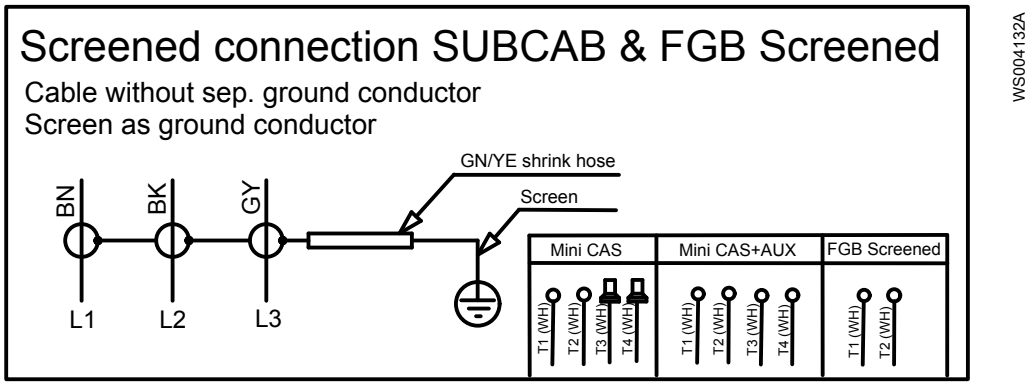

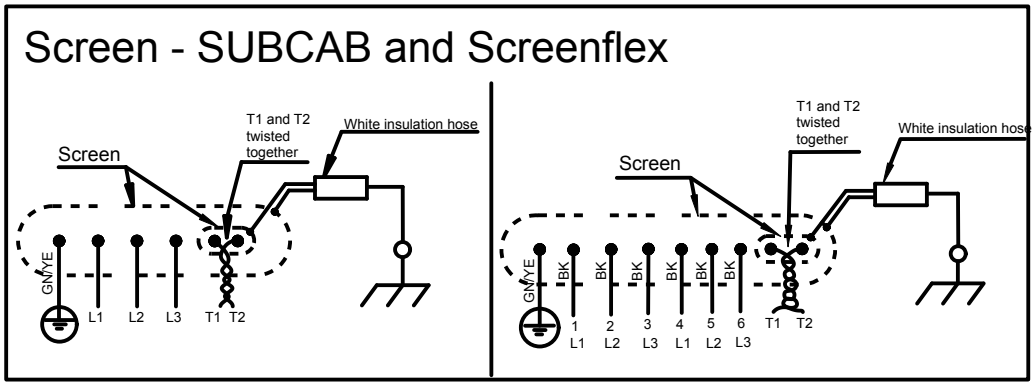

Sensors connection

SENSORS	Control	SUBCAB 7GX & 4GX Screenflex	SUBCAB AWG	SUBCAB screened
	T1	WH T1	OG	WH T1
	T2	WH T2	BU	WH T2
	T3	-	-	WH T3
	T4	-	-	WH T4

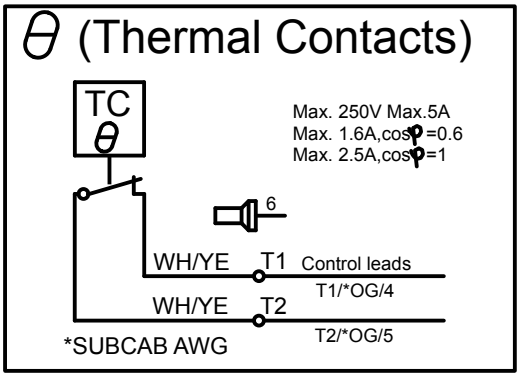

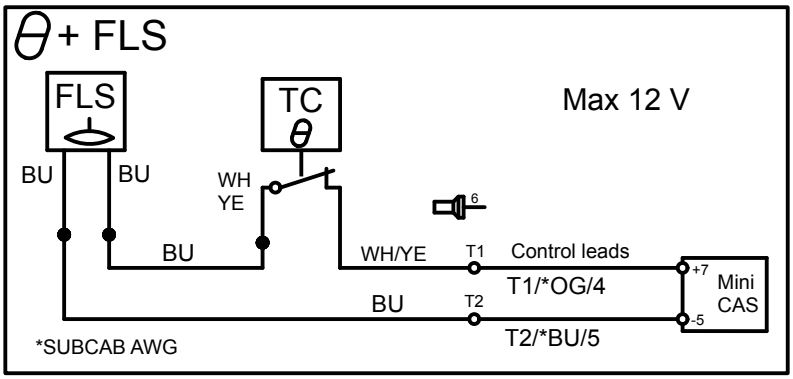

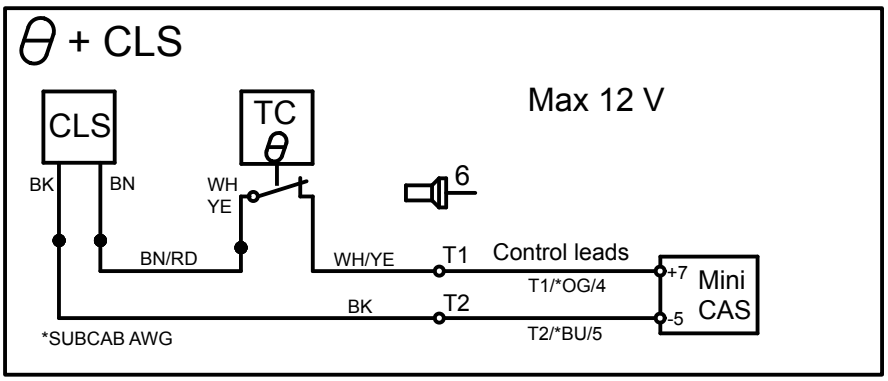

WS004130A

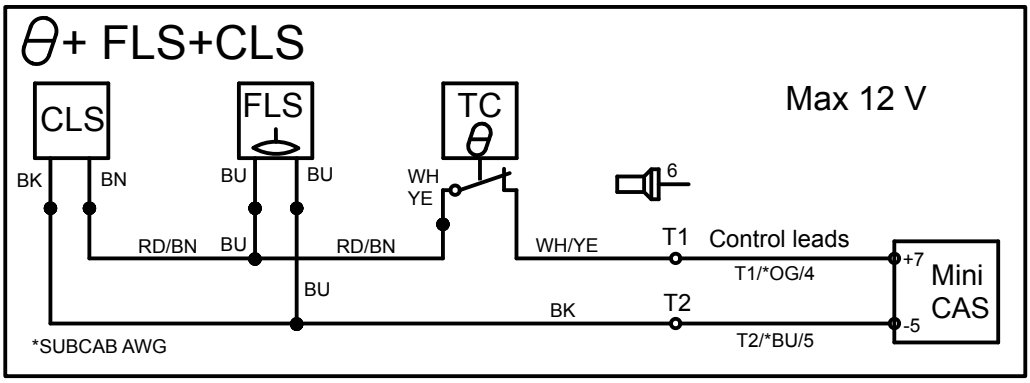

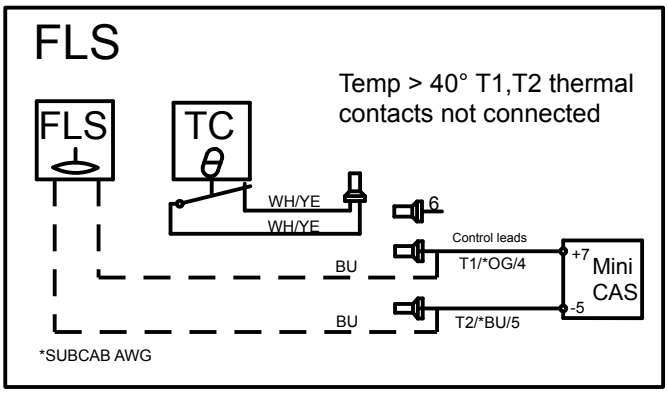

WS004131A

Sensor connection characteristics

The values have a 10 % tolerance.

Sensors	Value (mA)	Definition
FLS and thermal contact	0	Overtemperature
	7.8	OK
	36	Leakage
CLS and thermal contact	0	Overtemperature
	5.5	OK
	29	Leakage (5 seconds delay)
CLS, FLS and thermal contact	0	Overtempterature
	13.3	OK
	36–42	Leakage (0/5 seconds delay)

Check the impeller rotation

WARNING:
The starting jerk can be powerful.

1. Start the motor.
2. Stop the motor after a few seconds.
3. Check that the impeller rotates according to this illustration.

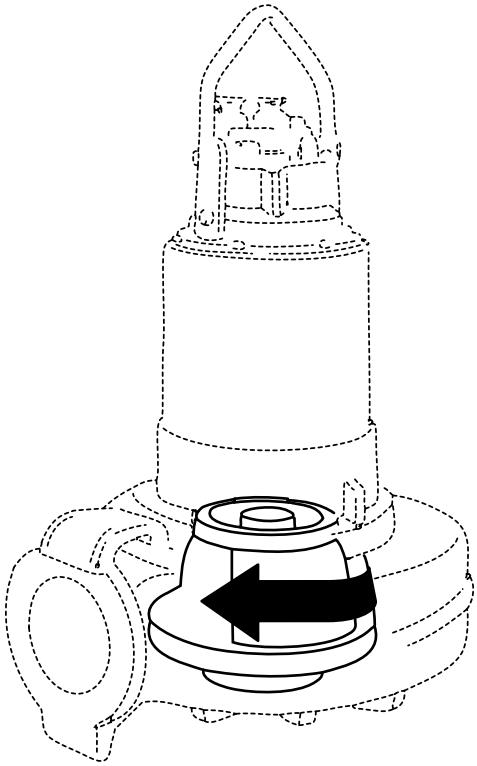

The correct direction of impeller rotation is clockwise when you look at the pump from above.

4. If the impeller rotates in the wrong direction, do one of these steps:
   - If the motor has a 1-phase connection, contact the local Xylem shop.
   - If the motor has a 3-phase connection, transpose two phase leads and do this procedure again.

Operation

Precautions

WARNING:
- Never operate the pump without safety devices installed.
- Never operate the pump with the discharge valve closed.
- Make sure you have a clear path of retreat.
- Never work alone.

CAUTION:
If the pump is equipped with automatic level control and/or internal contactor, there is a risk of sudden restart.

Distance to wet areas

Electrical Hazard:
Risk of electrical shock. Make sure no one gets closer than 20 m (65 ft.) to the unit when being in contact with the pumped or mixed liquid.

Noise level

NOTICE:
The noise level of the product is lower than 70 dB. However, the noise level of 70 dB may be exceeded in some installations and at certain operating points on the performance curve. Make sure that you understand the noise level requirements in the environment where the pump is installed. Failure to do so may result in hearing loss or violation of local laws.

Start the pump

Electrical Hazard:
A permanent-magnet motor generates voltage when the shaft is rotating. Ensure that the shaft can not rotate before performing any electrical installation.

WARNING:
- If you need to work on the pump, make sure that it is isolated from the power supply and cannot be energized.
- Make sure that the unit cannot roll or fall over and injure people or damage property.
- In some installations, the pump and the surrounding liquid may be hot. Bear in mind the risk of burn injuries.
- Make sure nobody is close to the unit when it is started. The unit will jerk in the opposite direction of the impeller rotation.

NOTICE:

Make sure that the rotation of the impeller is correct. For more information, see Check the impeller rotation.

1. Check the oil level in the oil housing.
2. Remove the fuses or open the circuit breaker, and check that the impeller can be rotated freely.
3. Conduct insulation test phase to ground. To pass, the value must exceed 5 megohms.
4. Check that the monitoring equipment works.
5. Start the pump.

Maintenance

Precautions

WARNING:

- Always follow safety guidelines when working on the product. See *Introduction and Safety* (page 3).
- Disconnect and lock out electrical power before installing or servicing the pump.
- Make sure that the unit cannot roll or fall over and injure people or damage property.
- Rinse the unit thoroughly with clean water before working on the unit.
- Rinse the components in water after dismantling.

WARNING:

Electrical hazard. A permanent magnet motor produces voltage when the shaft is rotating. The conductors must be insulated.

CAUTION:

- Magnetic stray fields may damage cardiac pacemaker and other medical implants. Stay clear of any magnetic stray fields that can occur near an open or disassembled permanent-magnet synchronous motor, or near a separate rotor of such a motor. Keep magnetic media away, including credit cards and watches.
- Crush hazard during disassembly or assembly of a permanent-magnet synchronous motor. Fingers or other body parts can be trapped and injured. Magnetic items such as tools attracted to the rotor can also cause personal injury.
- Assembly and disassembly of permanent-magnet synchronous motors must be performed by qualified personnel and according to relevant instructions.

Make sure that you follow these requirements:

- Check the explosion risk before you weld or use electrical hand tools.
- Allow all system and pump components to cool before you handle them.
- Make sure that the product and its components have been thoroughly cleaned.
- Do not open any vent or drain valves or remove any plugs while the system is pressurized. Make sure that the pump is isolated from the system and that pressure is relieved before you disassemble the pump, remove plugs, or disconnect piping.
- If the unit has a permanent magnet motor, ensure that you have read and understood all safety instructions regarding permanent magnet motors.

Maintenance guidelines

During maintenance and before reassembly, always remember to perform these tasks:

- Clean all parts thoroughly, particularly O-ring grooves.
- Change all O-rings, gaskets, and seal washers.
- Lubricate all springs, screws, and O-rings with grease.

During reassembly, always make sure that existing index markings are in line.

The reassembled drive unit must always be insulation-tested and the reassembled pump must always be test-run before normal operation.

Torque values

All screws and nuts must be lubricated to achieve correct tightening torque. Screws that are screwed into stainless steel must have the threads coated with suitable lubricants to prevent seizing.

If there is a question regarding the tightening torques, please contact a sales representative.

Screws and nuts

Table 1: Stainless steel, A2 and A4, torque Nm (ft-lbs)

Property class	M4	M5	M6	M8	M10	M12	M16	M20	M24	M30
50	1.0 (0.74)	2.0 (1.5)	3.0 (2.2)	8.0 (5.9)	15 (11)	27 (20)	65 (48)	127 (93.7)	220 (162)	434 (320)
70, 80	2.7 (2)	5.4 (4)	9.0 (6.6)	22 (16)	44 (32)	76 (56)	187 (138)	364 (268)	629 (464)	1240 (915)
100	4.1 (3)	8.1 (6)	14 (10)	34 (25)	66 (49)	115 (84.8)	248 (183)	481 (355)	–	–

Table 2: Steel, torque Nm (ft-lbs)

Property class	M4	M5	M6	M8	M10	M12	M16	M20	M24	M30
8.8	2.9 (2.1)	5.7 (4.2)	9.8 (7.2)	24 (18)	47 (35)	81(60)	194 (143)	385 (285)	665 (490)	1310 (966.2)
10.9	4.0 (2.9)	8.1 (6)	14 (10)	33 (24)	65 (48)	114 (84)	277 (204)	541 (399)	935 (689)	1840 (1357)
12.9	4.9 (3.6)	9.7 (7.2)	17 (13)	40 (30)	79 (58)	136 (100)	333 (245)	649 (480)	1120 (825.1)	2210 (1630)

Hexagon screws with countersunk heads

For hexagon socket head screws with countersunk head, maximum torque for all property classes must be 80% of the values for property class 8.8 above.

Change the oil

This image shows the plugs that are used to change the oil.

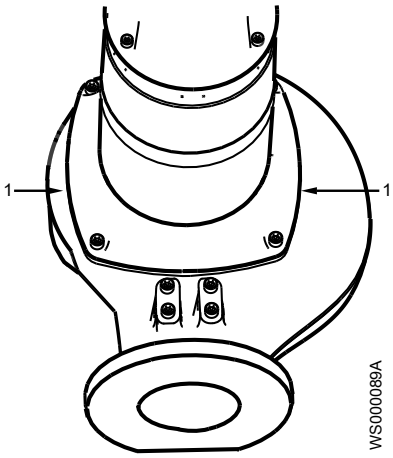

1. Oil plug

Empty the oil

WARNING:
The oil housing may be pressurized. Hold a rag over the oil plug to prevent oil from spraying out.

1. Place the pump in a horizontal position and unscrew the oil plug.
   If the pump has a hole with the markings "oil out" it is important that this hole is used for drainage.

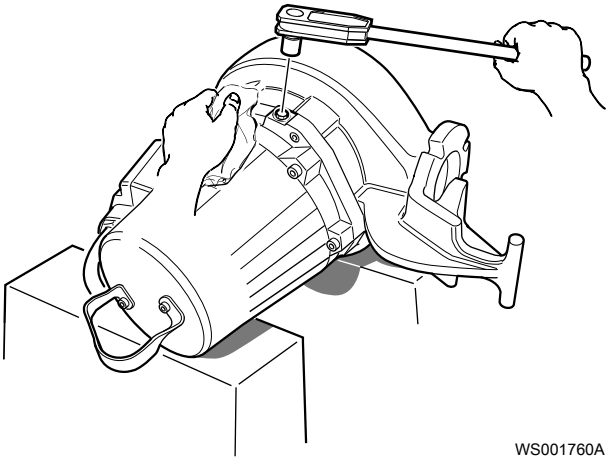

2. Place a container under the pump and turn the pump.
3. Unscrew the other oil plug.
   If this hole has the markings "oil in", raise the pump upright for a short period of time during drainage in order to drain all the oil.

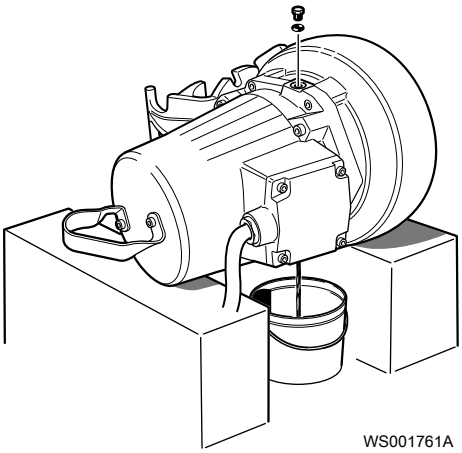

Fill with oil

The oil should be a medical white oil of paraffin type that fulfills FDA 172.878 (a) and viscosity close to VG32.

1. Replace the O-rings of the oil plugs.
2. Refit an oil plug in the hole that faces downwards or is marked "oil out", and tighten.
   Tightening torque: 10-40 Nm (7.5-29.5 ft-lbs)
3. Fill with oil through the hole on the opposite side or the hole marked "oil in".
   If the hole is marked "oil in", slightly tilt the pump and lower it again in order to fill the pump with the correct quantity.
   Quantity: approximately 1.0 L (1.1 qt.)

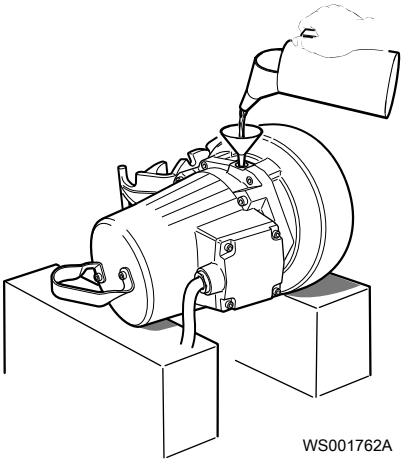

4. Refit the oil plug and tighten.
   Tightening torque: 10-40 Nm (7.5-29.5 ft-lbs)

Service the pump

Type of service	Purpose	Inspection interval
Initial inspection	To make a check up of the pump condition by an authorized Xylem service representative and, based on the result and findings from these measures, to determine the intervals for periodical inspection and major overhaul for the specific installation.	Within the first year of operation.

Type of service	Purpose	Inspection interval
Periodical inspection	To prevent operational interruptions and machine breakdown. Measures to secure performance and pump efficiency are defined and decided for each individual application. It can include such things as impeller trimming, wear part control and replacement, control of zinc-anodes and control of the stator.	Up to every year Applies to normal applications and operating conditions at media (liquid) temperatures <40°C.
Major overhaul	To secure a long operating lifetime for the product. It includes replacement of key components and the measures taken during an inspection.	Up to every 3 year Applies to normal applications and operating conditions at media (liquid) temperatures <40°C.

NOTICE:

Shorter intervals may be required when the operating conditions are extreme, for example with very abrasive or corrosive applications or when the liquid temperatures exceed 40°C (104°F).

Inspection

Service item	Action
Cable	1. If the outer jacket is damaged, replace the cable. 2. Check that the cables do not have any sharp bends and are not pinched.
Connection to power	Check that the connections are properly tightened.
Electrical cabinets	Check that they are clean and dry.
Impeller	1. Check the impeller clearance. 2. Adjust the impeller, if necessary.
Stator housing	1. Drain all liquid, if any. 2. Check the resistance of the leakage sensor. Normal value approx.1500 ohms, alarm approx. 430 ohms.
Insulation	Use a megger maximum 1000 V. 1. Check that the resistance between the earth (ground) and phase lead is more than 5 megohms. 2. Conduct a phase-to-phase resistance check.
Junction box	Check that it is clean and dry.
Lifting device	Check that local safety regulations are followed.
Lifting handle	1. Check the screws. 2. Check the condition of the lifting handle. 3. Replace if necessary.

Service item	Action
O-rings	1. Replace the oil plug O-rings. 2. Replace the O-rings at the entrance or junction cover. 3. Grease the new O-rings.
Overload protection and other protections	Check the correct settings.
Personnel safety devices	Check the guard rails, covers, and other protections.
Rotation direction	Check the impeller rotation.
Oil housing	Fill with new oil, if necessary.
Terminal block/closed end splice	Check that the connections are properly tightened.
Thermal contacts	Normally closed circuit; interval 0–1 ohm.
Voltage and amperage	Check the running values.

Major overhaul

For a major overhaul, take this action in addition to the tasks listed under Inspection.

Service item	Action
Support and main bearing	Replace the bearings with new bearings.
Mechanical seal	Replace with new seal units.

Service in case of alarm

For information about indication values for sensors, see *Sensor-connection*.

Alarm source	Action
CLS	Check for water in the oil housing. If the oil contains too much water: 1. Drain the oil and water. 2. Replace with new oil.
FLS	1. Check for liquid in the stator housing. 2. Drain all liquid, if any. 3. Check the mechanical seal unit, the O-rings, and the cable entry, if liquid was found.
Thermal contact	Check the start and stop levels.
The overload protection	Check that the impeller can rotate freely.

Replace the impeller

Required tools:

- 8 mm hexagon bit adapter with an extension of at least 125 mm (4.92 in.)
- Impeller puller

  If applicable, contact your local Xylem representative for correct type and size.
- Rod (wood or copper) for locking the impeller in place, if applicable.
- Two crowbars, if applicable

WARNING:
- If you fail with the impeller installation, you must redo the installation procedure from the beginning.
- A worn impeller and/or pump housing can have very sharp edges. Wear protective gloves.
- When laying the pump on its side, do not allow the weight of the pump to rest on any portion of the impeller. The impeller must not be allowed to make contact with the concrete floor or other hard and rough surfaces.

Replace the C- or D-impeller

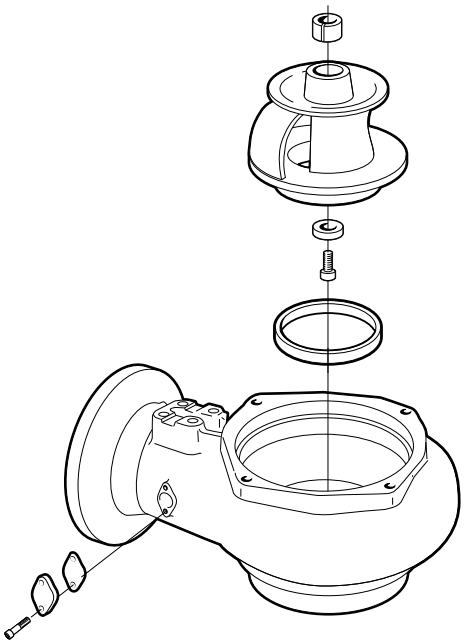

Figure 9: C-impeller

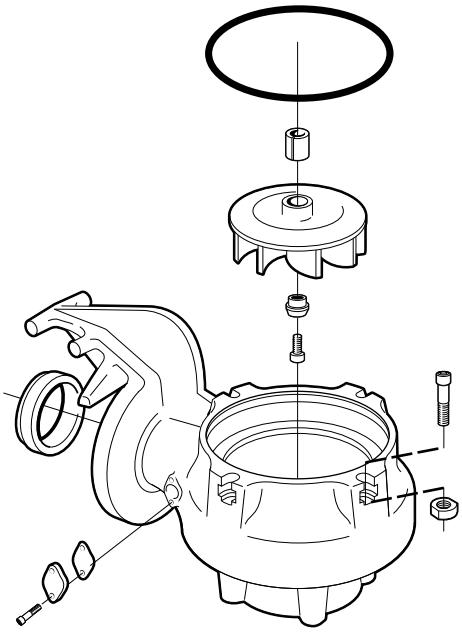

Figure 10: D-impeller

Remove the impeller: C , D

CAUTION:
A worn impeller and/or pump housing can have very sharp edges. Wear protective gloves.

1. Remove the pump housing or the suction cover.

2. Remove the impeller screw.
   If applicable, use the rod.

Figure 11: C-impeller

Figure 12: D-impeller

3. Remove the washer.
4. Remove the impeller.
   Use the impeller puller or the crowbars.

Figure 13: D-impeller

5. Remove the conical sleeve.

Install the impeller: C , D

1. Prepare the shaft:
   a) Make sure that the end of the shaft is clean and free from burrs.
      Polish off any flaws with a fine emery cloth.
   b) Lubricate the end of the shaft.

   NOTICE:
   Do not grease the conical part of the shaft.

2. Mount the impeller:
   a) Fit the conical sleeve onto the shaft.

   b) Lubricate the impeller screw threads and contact surface.
      Ensure that all parts are clean.
   c) Fit the washer on the lubricated impeller screw.
   d) Press the impeller onto the shaft with the impeller screw.

   NOTICE:
   The impeller may get jammed against the oil housing bottom. Pull out the impeller a couple of mm, when mounting a C impeller with the pressure class LT.

3. Tighten the impeller screw.
   If applicable, use the rod.
   Tightening torque: 65 Nm (48 ft-lbs)
   For versions .800, .810, .820, .830, .900, .910, tighten a further 1/8 turn, 45° after tightening to the correct torque.

Check that the impeller can rotate freely.

4. Mount the pump housing:
   a) T-, Z-installation only: Fit a new lubricated O-ring to the pump housing.
   b) Fit the pump housing.
   c) Fit and tighten the lubricated screws.
      Tightening torque: 57 Nm (42 ft-lbs).

Replace the F-impeller

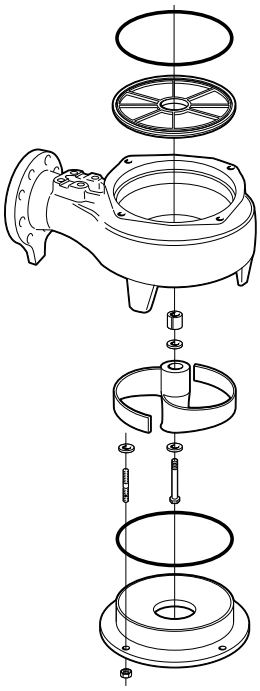

Remove the F-impeller

CAUTION:
A worn impeller and/or pump housing can have very sharp edges. Wear protective gloves.

1. Remove the suction cover.
2. Remove the impeller screw, the ring, and the washers.
   If applicable, use the rod.

3. Remove the impeller.
   Use the impeller puller or the crowbars.
4. Remove the conical sleeve.

Install the F-impeller

1. Prepare the shaft:

a) Make sure that the end of the shaft is clean and free from burrs.
   Polish off any flaws with a fine emery cloth.
b) Lubricate the end of the shaft.

NOTICE:
Do not grease the conical part of the shaft.

2. Mount the impeller:
   a) Fit the conical sleeve onto the shaft.
   b) Fit one plain washer with a thickness of 2 mm (0.08 in.), eight adjustment washers with a thickness of 0.5 mm (0.02 in.), and eight adjustment washers with a thickness of 0.2 mm (0.008 in.) onto the impeller.

   c) Lubricate the impeller screw threads and contact surface.
      Ensure that all parts are clean.
   d) Press the impeller onto the shaft with the impeller screw.
3. Fasten the impeller:
   a) Prevent the impeller from rotating by inserting the rod through the pump housing outlet.
   b) Tighten the impeller screw.
      If applicable, use the rod.
      Tightening torque: 65 Nm (48 ft-lbs)
      For versions .800, .810, .820, .830, .900, .910, tighten a further 1/8 turn, 45° after tightening to the correct torque.

   Check that the impeller can rotate freely.

4. Adjust the impeller:
   a) Measure the distance between the edge of the impeller and the pump housing cover.

      The correct distance should be 0.5-1.5 mm (0.02-0.06 in.). Add or remove the appropriate number of adjusting washers in order to achieve correct distance.

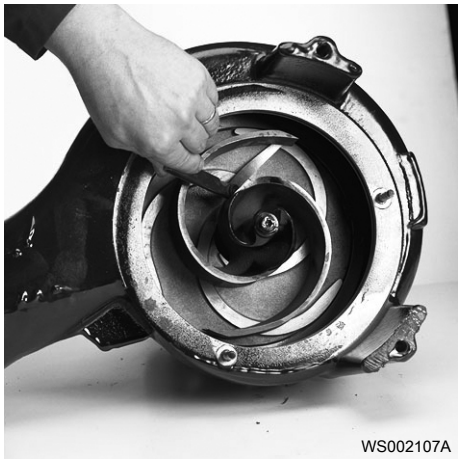

   b) Tighten the impeller screw.

      If applicable, use the rod.

      Tightening torque: 65 Nm (48 ft-lbs)

      For versions .800, .810, .820, .830, .900, .910, tighten a further 1/8 turn, 45° after tightening to the correct torque.

      Check that the impeller can rotate freely.
5. Fit a new greased O-ring to the into the groove in the pump housing.

6. Mount the suction cover:
   a) Fit the studs on the pump housing.

      Use Loctite 603 locking liquid in order to secure the studs.
   b) Fit two adjustment washers with a thickness of 2 mm (0.08 in.) and 8-10 adjustment washers with a thickness of 0.25 mm (0.01 in.), onto each stud.

c) Fit the suction cover to the studs.
d) Fit the lock nuts onto the studs.
e) Tighten the nuts.
   Tightening torque: 17 Nm (13 ft-lbs)

7. Adjust the suction cover:
   a) Measure the distance between the impeller and the suction cover.
      The correct distance should be 0.5-1 mm (0.02-0.04 in.). Add or remove the appropriate number of adjusting washers in order to achieve the correct distance.

   b) Tighten the nuts.
      Tightening torque: 17 Nm (13 ft-lbs)

8. Raise the pump to a vertical position.
   Check that the impeller can rotate freely.

Replace the M-impeller

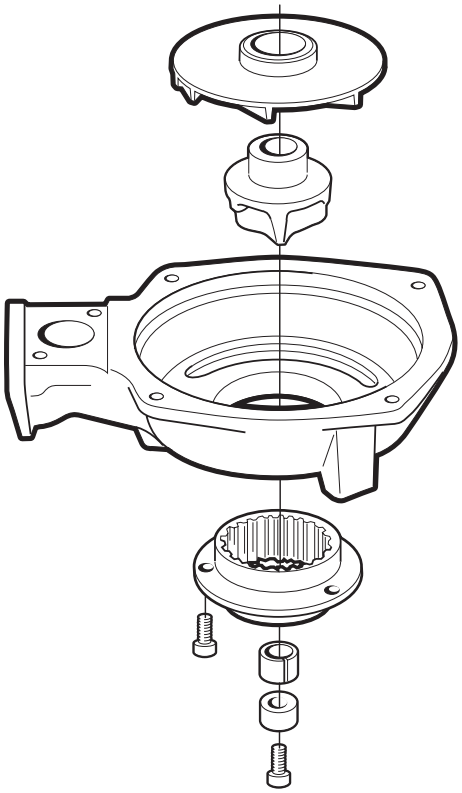

Figure 14: M-impeller

Remove the M-impeller

CAUTION:
A worn impeller and/or pump housing can have very sharp edges. Wear protective gloves.

1. Remove the pump housing.
2. Remove the impeller screw and outer sleeve.
   If applicable, use the rod.

3. Refit the impeller screw.

4. Fit the impeller puller and pull off the impeller and cutter wheel.
   Place a protector between the screw head and the impeller puller.

5. Remove the conical sleeve.

Install the M-impeller

1. Make sure that the end of the shaft is clean and free from burrs.
   Polish off any flaws with a fine emery cloth.
2. Mount the impeller:
   a) Fit the conical sleeve onto the shaft.

   b) Fit the cutter wheel into the impeller.
   c) Fit the outer sleeve onto the lubricated impeller screw.
   d) Fit the impeller with the cutter wheel onto the shaft with the impeller screw.
      Do not tighten the impeller screw.
3. Adjust the impeller:
   a) Use a straightedge and a vernier to measure the distance between the vanes of the impeller and the shoulder for the pump housing on the oil housing bottom.

Pressure class	Phase	Hz	Distance
LT	1	60	43.5±0.3 mm (1.71±0.01 in.)
LT	3	50, 60	46.0±0.3 mm (1.81±0.01 in.)
HT	1,3	50, 60	43.5±0.3 mm (1.71±0.01 in.)

   b) Slide the impeller on to the shaft until you reach the correct distance.

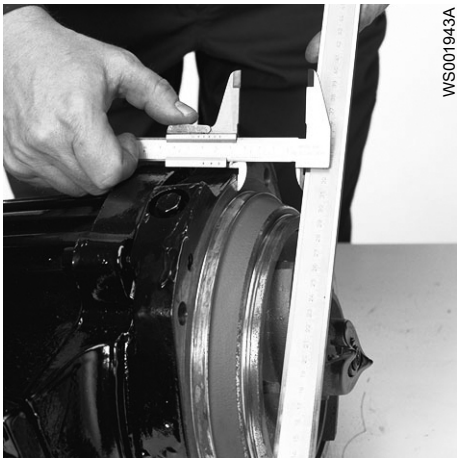

4. Tighten the impeller screw.
   If applicable, use the rod.
   Tightening torque: 65 Nm (48 ft-lbs)

   Check that the impeller can rotate freely.
5. Mount the pump housing:
   a) Fit a new lubricated O-ring into the pump housing.
   b) Fit the pump housing.
   c) Fit and tighten the lubricated screws.
      Tightening torque: 57 Nm (42 ft-lbs).

Replace the N-impeller

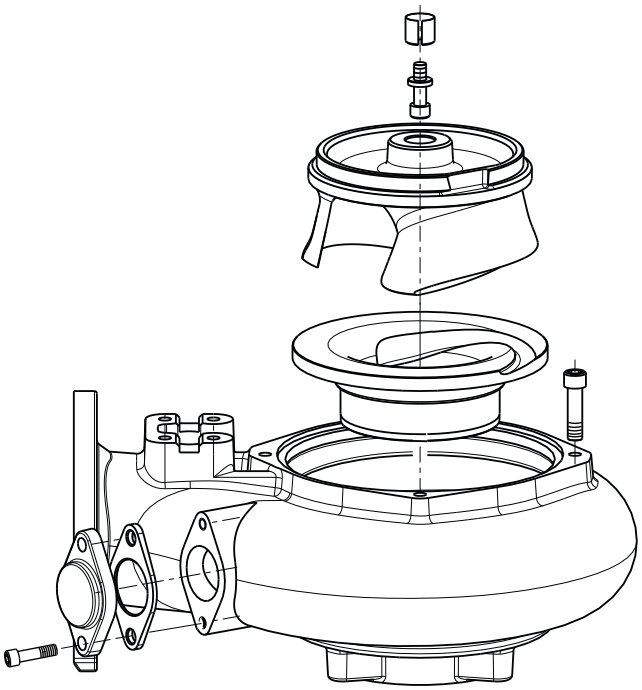

Remove the N-impeller

CAUTION:
A worn impeller and/or pump housing can have very sharp edges. Wear protective gloves.

1. Remove the pump housing.
2. For the version .160 and .190, remove the plug.
3. Remove the impeller screw.
   Use the impeller puller or the crowbars.
4. Remove the impeller.
5. Remove the washer and the conical sleeve.

Install the N-impeller

1. Prepare the shaft:
   a) Make sure that the end of the shaft is clean and free from burrs.
      Polish off any flaws with a fine emery cloth.
   b) Grease the shaft end.

   NOTICE:
   Surplus grease can cause the impeller to become loose. Remove surplus grease from conical and/or cylindrical surfaces of shafts and/or sleeves.
2. Mount the impeller:
   a) Fit the conical sleeve onto the shaft.
   b) Lubricate the impeller screw threads and contact surface.
      Ensure that all parts are clean.
   c) Fit the washer on the lubricated impeller screw.

d) Fit the impeller to the shaft.
e) Hand-tighten the impeller screw enough to prevent it from falling off.

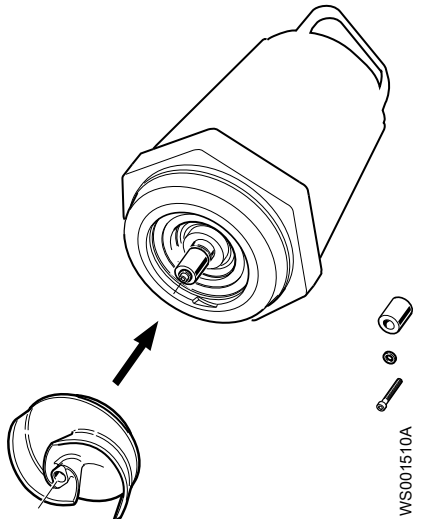

3. Mount the pump housing:
   a) Fit the pump housing.
   b) Fit and tighten the lubricated screws.
      Tightening torque: 57 Nm (42 ft-lbs).
4. Adjust the impeller:
   a) Measure the distance between the lower edge of the impeller and the insert ring.
      The correct distance is 0.2-0.8 mm (0.084-0.032 in.).

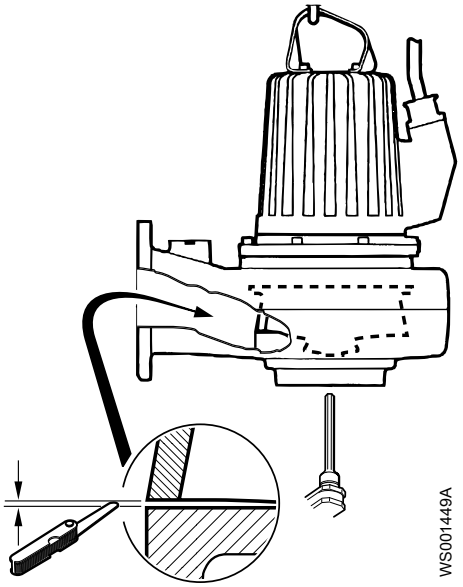

   b) Slide the impeller on the shaft until the correct clearance is reached.
5. Tighten the impeller screw.
   If applicable, use the rod.
   Tightening torque: 65 Nm (48 ft-lbs)
   For versions .800, .810, .820, .830, .900, .910, tighten a further 1/8 turn, 45° after tightening to the correct torque.
   Check that the impeller can rotate freely.

CAUTION:

Beware of the pinch point hazard between the rotating impeller and the guide pin.

6. For the .160 and .190, fit the lubricated plug and tighten it.
   Tightening torque: 25 Nm (19 ft-lbs)

Troubleshooting

Introduction

Follow these guidelines when troubleshooting the pump:

- Disconnect and lock out the power supply except when conducting checks that require voltage.
- Make sure that no one is near the pump when the power supply is reconnected.
- When troubleshooting electrical equipment, use the following:
  - Universal instrument multimeter
  - Test lamp (continuity tester)
  - Wiring diagram

The pump does not start

WARNING:
Always disconnect and lock out power before servicing to prevent unexpected startup. Failure to do so could result in death or serious injury.

WARNING:
Electrical hazard. A permanent magnet motor produces voltage when the shaft is rotating. The conductors must be insulated.

NOTICE:
Do NOT override the motor protection repeatedly if it has tripped. Doing so may result in equipment damage.

Cause	Remedy
An alarm signal has been triggered on the control panel.	Check that: • The impeller rotates freely. • The sensor indicators do not indicate an alarm. • The overload protection is not tripped. If the problem still persists: Contact the local Xylem service shop.
The pump does not start automatically, but can be started manually.	Check that: • The start level regulator is functioning. Clean or replace if necessary. • All connections are intact. • The relay and contactor coils are intact. • The control switch (Man/Auto) makes contact in both positions. Check the control circuit and functions.
The installation is not receiving voltage.	Check that: • The main power switch is on. • There is control voltage to the start equipment. • The fuses are intact. • There is voltage in all phases of the supply line.

Cause	Remedy
	• All fuses have power and that they are securely fastened to the fuse holders. • The overload protection is not tripped. • The motor cable is not damaged.
The impeller is stuck.	Clean: • The impeller • The sump in order to prevent the impeller from clogging again.

If the problem persists, refer to the Flygt Service Guide on the web or contact the local Xylem service shop. Always state the serial number of your pump when you contact Xylem, see *Product Description* (page 12).

The pump does not stop when a level sensor is used

WARNING:
Always disconnect and lock out power before servicing to prevent unexpected startup. Failure to do so could result in death or serious injury.

WARNING:
Electrical hazard. A permanent magnet motor produces voltage when the shaft is rotating. The conductors must be insulated.

Cause	Remedy
The pump is unable to empty the sump to the stop level.	Check that: • There are no leaks from the piping and/or discharge connection. • The impeller is not clogged. • The non-return valve(s) are functioning properly. • The pump has adequate capacity. For information: Contact the local Xylem service shop.
There is a malfunction in the level-sensing equipment.	• Clean the level regulators. • Check the functioning of the level regulators. • Check the contactor and the control circuit. • Replace all defective items.
The stop level is set too low.	Raise the stop level.

If the problem persists, refer to the Flygt Service Guide on the web or contact the local Xylem service shop. Always state the serial number of your pump when you contact Xylem, see *Product Description* (page 12).

The pump starts-stops-starts in rapid sequence

Cause	Remedy
The pump starts due to back-flow which fills the sump to the start level again.	Check that:

Cause	Remedy
	• The distance between the start and stop levels is sufficient. • The non-return valve(s) work(s) properly. • The length of the discharge pipe between the pump and the first non-return valve is sufficiently short.
The self-holding function of the contactor malfunctions.	Check: • The contactor connections. • The voltage in the control circuit in relation to the rated voltages on the coil. • The functioning of the stop-level regulator. • Whether the voltage drop in the line at the starting surge causes the contactor's self-holding malfunction.

If the problem persists, refer to the Flygt Service Guide on the web or contact the local Xylem service shop. Always state the serial number of your pump when you contact Xylem, see *Product Description* (page 12).

The pump runs but the motor protection trips

WARNING:

Always disconnect and lock out power before servicing to prevent unexpected startup. Failure to do so could result in death or serious injury.

WARNING:

Electrical hazard. A permanent magnet motor produces voltage when the shaft is rotating. The conductors must be insulated.

NOTICE:

Do NOT override the motor protection repeatedly if it has tripped. Doing so may result in equipment damage.

Cause	Remedy
The motor protection is set too low.	Set the motor protection according to the data plate and if applicable the cable chart.
The impeller is difficult to rotate by hand.	• Clean the impeller. • Clean out the sump. • Check that the impeller is properly trimmed.
The drive unit is not receiving full voltage on all three phases.	• Check the fuses. Replace fuses that have tripped. • If the fuses are intact, notify a certified electrician.
The phase currents vary, or they are too high.	Contact the local Xylem service shop.

Cause	Remedy
The insulation between the phases and ground in the stator is defective.	1. Use an insulation tester. With a 1000 V DC megger, check that the insulation between the phases and between any phase and ground is > 5 megohms. 2. If the insulation is less: Contact the local Xylem service shop.
The density of the pumped fluid is too high.	Make sure that the maximum density is 1100 kg/m^3 (9.2 lb/US gal) • Change the impeller, or • Change to a more suitable pump. • Contact the local Xylem service shop.
There is a malfunction in the overload protection.	Replace the overload protection.

If the problem persists, refer to the Flygt Service Guide on the web or contact the local Xylem service shop. Always state the serial number of your pump when you contact Xylem, see *Product Description* (page 12).

The pump delivers too little or no water

WARNING:
Always disconnect and lock out power before servicing to prevent unexpected startup. Failure to do so could result in death or serious injury.

WARNING:
Electrical hazard. A permanent magnet motor produces voltage when the shaft is rotating. The conductors must be insulated.

NOTICE:
Do NOT override the motor protection repeatedly if it has tripped. Doing so may result in equipment damage.

Cause	Remedy
The impeller rotates in the wrong direction.	• If it is a 3-phase pump, transpose two phase leads. • If it is a 1-phase pump: Contact the local Xylem service shop.
One or more of the valves are set in the wrong positions.	• Reset the valves that are set in the wrong position. • Replace the valves, if necessary. • Check that all valves are correctly installed according to media flow. • Check that all valves open correctly.
The impeller is difficult to rotate by hand.	• Clean the impeller. • Clean out the sump. • Check that the impeller is properly trimmed.
The pipes are obstructed.	Clean out the pipes to ensure a free flow.
The pipes and joints leak.	Find the leaks and seal them.

Cause	Remedy
There are signs of wear on the impeller, pump, and casing.	Replace the worn parts.
The liquid level is too low.	• Check that the level sensor is set correctly. • Depending on the installation type, add a means for priming the pump, such as a foot valve.

If the problem persists, refer to the Flygt Service Guide on the web or contact the local Xylem service shop. Always state the serial number of your pump when you contact Xylem, see *Product Description* (page 12).

Technical Reference

Motor data

Feature	Description
Motor type	• 3102.090/.095/.160/.170/.181/.185/.190/.890: Squirrel-cage induction motor • 3102.800/.810/.820/.830/.900/.910: Line-started, permanent-magnet synchronous motor
Frequency	50 or 60 Hz
Supply	1-phase or 3-phase
Starting method	• Direct on-line • Star-delta • Soft starter
Maximum starts per hour	30 evenly spaced starts per hour
Code compliance	IEC 60034-1
Rated output variation	±5%
Voltage variation without overheating	±10%, provided that it does not run continuously at full load
Voltage imbalance tolerance	2%
Stator insulation class	H (180°C [360°F])

Application limits

Data	Description
Liquid temperature	40°C (104°F) maximum The pump can be operated at full load only if at least half the stator housing is submerged. Warm-liquid version: 70°C (158°F) maximum (3102.160, 3102.181, 3102.185) Ex-approved pumps: 40°C (104°F) maximum
Liquid density	1100 kg/m³ (9.2 lb per US gal) maximum
pH of the pumped media (liquid)	5.5–14
Depth of immersion	20 m (65 ft) maximum
Other	For the specific weight, current, voltage, power ratings, and speed of the pump, see the data plate of the pump.

Xylem |ˈzīləm|

1) The tissue in plants that brings water upward from the roots
2) A leading global water technology company

We're 12,500 people unified in a common purpose: creating innovative solutions to meet our world's water needs. Developing new technologies that will improve the way water is used, conserved, and re-used in the future is central to our work. We move, treat, analyze, and return water to the environment, and we help people use water efficiently, in their homes, buildings, factories and farms. In more than 150 countries, we have strong, long-standing relationships with customers who know us for our powerful combination of leading product brands and applications expertise, backed by a legacy of innovation.

For more information on how Xylem can help you, go to xyleminc.com

xylem
Let's Solve Water

Xylem Water Solutions AB
Gesällvägen 33
174 87 Sundbyberg
Sweden
Tel. +46-8-475 60 00
Fax +46-8-475 69 00
http://tpi.xyleminc.com

Visit our Web site for the latest version of this document and more information

The original instruction is in English. All non-English instructions are translations of the original instruction.

© 2011 Xylem Inc.

898565_3.0_en.US_2012-04_IOM.
3102.090/.095/.160/.170/.181/.185/.190/.800/.810/.820/.830/.890/.900/.910

SEW EURODRIVE

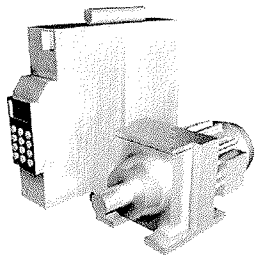

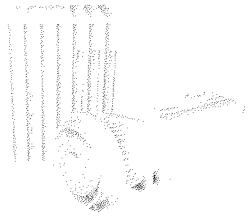

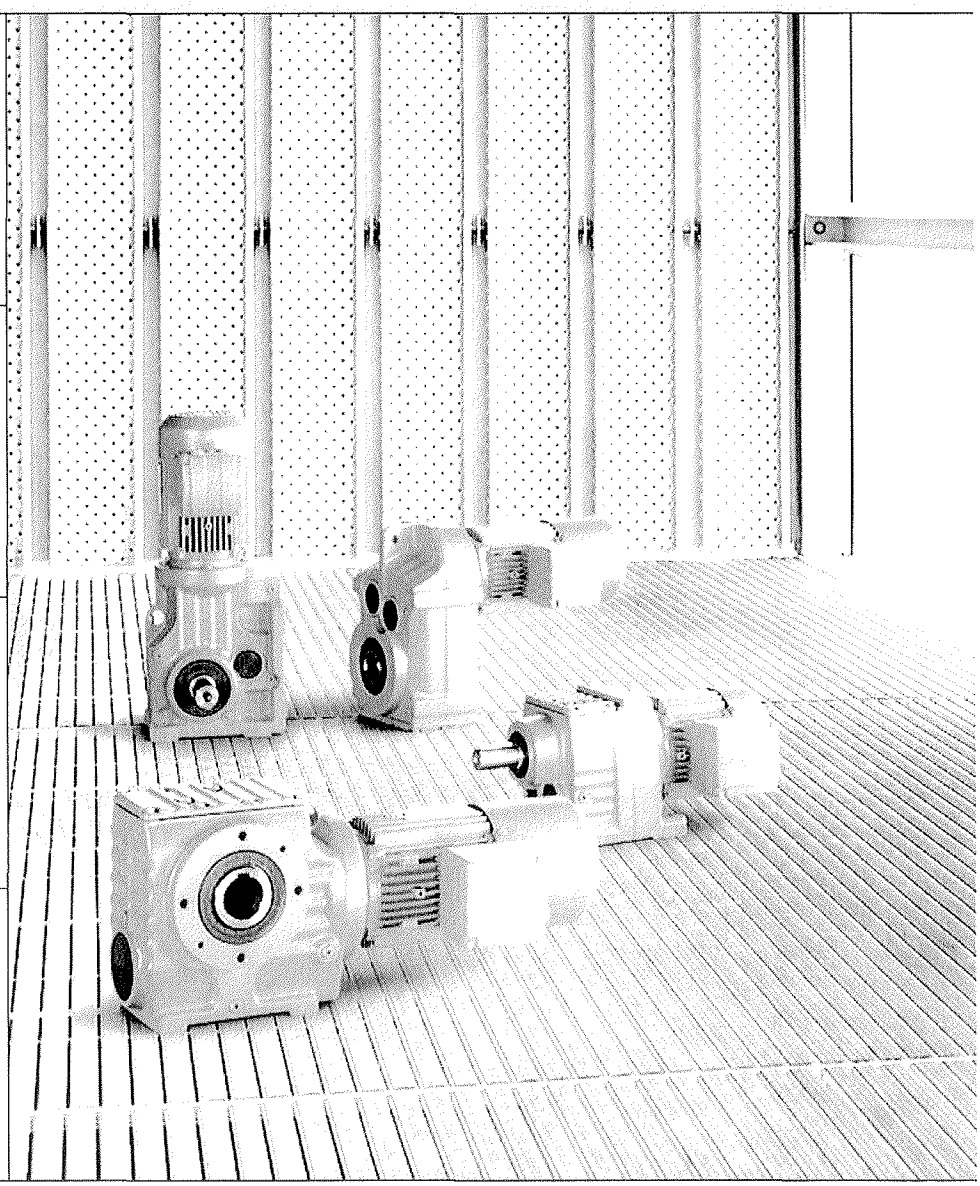

Gear Units, R..7, F..7, K..7, S..7 Series, SPIROPLAN® W

A6.B01

Edition 05/2004

11226811 / EN

Operating Instructions

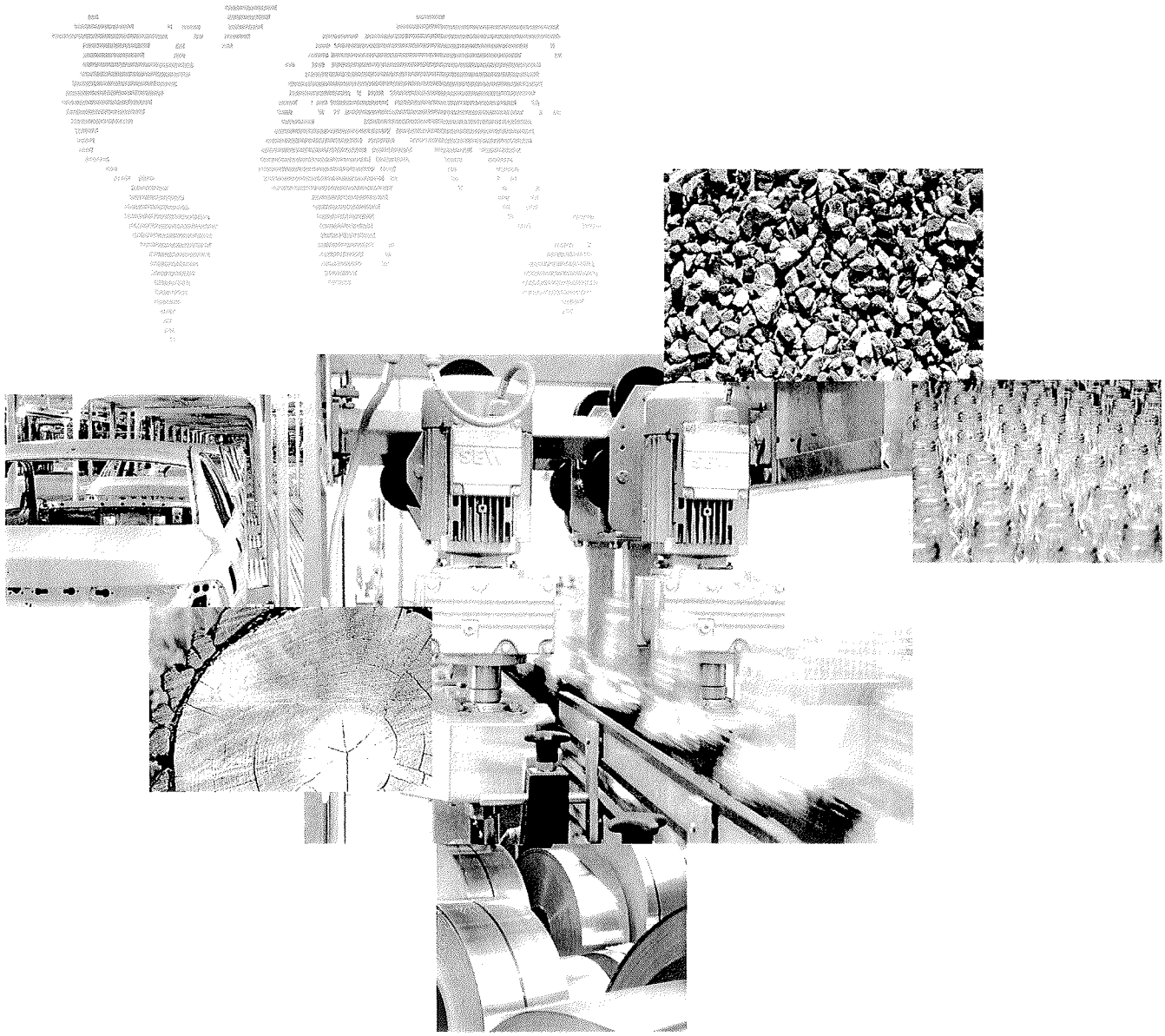

SEW
EURODRIVE

Contents

1 Important Notes 4

2 Safety Notes 6

3 Gear Unit Structure 9
3.1 Basic structure of helical gear units 9
3.2 Basicstructure of parallel shaft helical gear units 10
3.3 Basic structure of helical-bevel gear units 11
3.4 Basic structure of helical-worm gear units 12
3.5 Basic structure of SPIROPLAN® gear units 13
3.6 Nameplate, unit designation 14

4 Mechanical Installation 15
4.1 Required tools / aids 15
4.2 Prerequisites for assembly 15
4.3 Installing the gear unit 16
4.4 Gear unit with solid shaft 19
4.5 Torque arms for mounted gear units 21
4.6 Mounted gear unit with keyway or splined hollow shaft 23
4.7 Mounted gear units with shrink disc 27
4.8 Mounted gear units with TorqLOC® 30
4.9 AM adapter coupling 36
4.10 AQ adapter coupling 38
4.11 AD input shaft assembly 40

5 Startup 44
5.1 Startup of helical-worm and SPIROPLAN® W gear units 44
5.2 Startup of helical, parallel shaft helical and helical-bevel gear units 44

6 Inspection and Maintenance 45
6.1 Inspection and maintenance intervals 45
6.2 Lubricant change intervals 45
6.3 Inspection and maintenance of the gear unit 46
6.4 Inspection / maintenance of AM / AQA adapters 47
6.5 Inspection / maintenance of AD adapters 47

7 Malfunctions 48
7.1 Gear unit malfunctions 48
7.2 AM / AQA / AL adapter malfunctions 48
7.3 AD input shaft assembly malfunctions 49

8 Mounting Positions 50
8.1 General information on mounting positions 50
8.2 Key to the mounting position sheets 51
8.3 Mounting positions for R helical gearmotors 52
8.4 Mounting positions of RX helical gearmotors 55
8.5 Mounting positions for parallel shaft helical gearmotors 57
8.6 Mounting positions for helical-bevel gearmotors 60
8.7 Mounting positions for helical-worm gearmotors 65
8.8 Mounting positions for SPIROPLAN® W gearmotors 71

9 Lubricants 74
9.1 Lubricant table 74
9.2 Lubricant fill quantities 77

10 Appendix 82
10.1 Index of changes 82

11 Index 83

1 Important Notes

Safety and warning instructions

Always follow the safety and warning instructions in this publication!

	Electrical hazard Possible consequences: Severe or fatal injuries.
	Hazard Possible consequences: Severe or fatal injuries.
	Hazardous situation Possible consequences: Slight or minor injuries.
STOP	**Harmful situation** Possible consequences: Damage to the drive and the environment.
	Tips and useful information.

You must adhere to the operating instructions to ensure:

- Trouble-free operation
- Fulfillment of any rights to claim under guarantee

Consequently, read the operating instructions before you start working with the gear unit!

The operating instructions contain important information about servicing. Therefore, keep the operating instructions close to the gear unit.

STOP

- Adjust the lubricant fill volume and position of the breather valve accordingly in the event of a change of mounting position (see Sec. "Lubricants" and "Mounting Positions").
- Follow the instructions in Sec. "Mechanical installation" / "Installing the gear unit"!

Waste disposal

Please follow the latest instructions: Dispose of the following materials in accordance with the regulations in force:

- Steel scrap:
  - Housing parts
  - Gears
  - Shafts
  - Anti-friction bearing
  - Gray-cast iron (if there is no special collection)
- Parts of the worm gears are made of non-ferrous metals. Dispose of the worm gears as appropriate.
- Collect waste oil and dispose of it correctly.

2 Safety Notes

Preface

The following safety notes are primarily concerned with the use of gear units. If using **gearmotors**, please also refer to the safety notes for motors in the relevant operating instructions.

Please also consider the supplementary safety notes in the individual sections of these operating instructions.

General information

During and after operation, gearmotors, gear units and motors have:

- Live parts
- Moving parts
- Hot surfaces (may be the case)

Only qualified personnel may carry out the following work:

- Transportation
- Putting into storage
- Installation / assembly
- Connection
- Startup
- Maintenance
- Servicing

The following information and documents must be observed during these processes:

- Relevant operating instructions and wiring diagrams
- Warning and safety signs on the gear unit / gearmotor
- System-specific regulations and requirements
- National / regional regulations governing safety and the prevention of accidents

Serious injuries and property damage may result from:

- Improper use
- Incorrect installation or operation
- Unauthorized removal of necessary protection covers or the housing

Designated use

Gearmotors / gear units from SEW are intended for industrial systems. They correspond to the applicable standards and regulations.

Technical data and information about the permitted conditions can be found on the nameplate and in the documentation.

It is essential that you follow all the instructions!

Transportation

Inspect the shipment for any damage that may have occurred in transit as soon as you receive the delivery. Inform the shipping company immediately. It may be that you are not permitted to startup the drive due to the damage.

Tighten installed eyebolts. The eyebolts are only designed for the weight of the gearmotor / gear unit. Do not attach any additional loads.

The installed lifting eyebolts comply with DIN 580. The loads and regulations specified in this standard must always be observed. If two eyebolts are available, use both of them for transport. In this case, the tension force vector of the slings must not exceed a 45° angle in accordance with DIN 580.

Use suitable, sufficiently rated handling equipment if necessary. Remove any transportation fixtures prior to startup.

Extended storage of gear units

Gear units of the "extended storage" type have:

- An oil fill suitable for the mounting position so the unit is ready to run (mineral oil CLP and synthetic oil CLP HC). You should still check the oil level before startup (see Sec. "Inspection / Maintenance" / "Inspection and maintenance of the gear unit").
- A higher oil level in some cases (synthetic oil CLP PG / food grade oil). Correct the oil level before startup (see Sec. "Inspection / Maintenance" / "Inspection and maintenance of the gear unit").

Comply with the storage conditions specified in the following table for extended storage:

Climate zone	Packaging[1)]	Storage location	Storage time
Temperate (Europe, USA, Canada, China and Russia, excluding tropical zones)	Packed in containers, with desiccant and moisture indicator sealed in the plastic wrap.	With roof, protected against rain and snow, no shock loads.	Up to three years with regular checks on the packaging and moisture indicator (relative atmospheric humidity < 50 %).
	Open	With roof, enclosed at constant temperature and atmospheric humidity (5 °C < ϑ < 60 °C, < 50 % relative atmospheric humidity). No sudden temperature fluctuations and controlled ventilation with filter (free from dirt and dust). No aggressive vapors and no shock loads.	Two years or more given regular inspections. Check for cleanliness and mechanical damage as part of the inspection. Check corrosion protection.
Tropical (Asia, Africa, Central and South America, Australia, New Zealand excluding temperate zones)	Packed in containers, with desiccant and moisture indicator sealed in the plastic wrap. Protected against insect damage and mildew by chemical treatment.	With roof, protected against rain, no shock loads.	Up to three years with regular checks on the packaging and moisture indicator (relative atmospheric humidity < 50 %).
	Open	With roof, enclosed at constant temperature and atmospheric humidity (5 °C < ϑ < 60 °C, < 50 % relative atmospheric humidity). No sudden temperature fluctuations and controlled ventilation with filter (free from dirt and dust). No aggressive vapors and no shock loads. Protection against insect damage.	Two years or more given regular inspections. Check for cleanliness and mechanical damage as part of the inspection. Check corrosion protection.

1) Packaging must be performed by an experienced company using the packaging materials that have been expressly specified for the particular application.

Installation / assembly	Observe the instructions in the sections "Installation" and "Assembly/Removal"!
Startup / operation	Check that the direction of rotation is correct in **decoupled** status. Listen out for unusual grinding noises as the shaft rotates. Secure the shaft keys for test mode without drive components. Do not render monitoring and protection equipment inoperative even for test mode. Switch off the gearmotor if in doubt whenever changes occur in relation to normal operation (e.g. increased temperature, noise, vibration). Determine the cause; contact SEW-EURODRIVE if necessary.
Inspection / maintenance	Follow the instructions in the section "Inspection and Maintenance"!

3 Gear Unit Structure

The following figures are block diagrams. Their purpose is only to make it easier to assign components to the spare parts lists. Discrepancies may occur depending on the gear unit size and version!

3.1 Basic structure of helical gear units

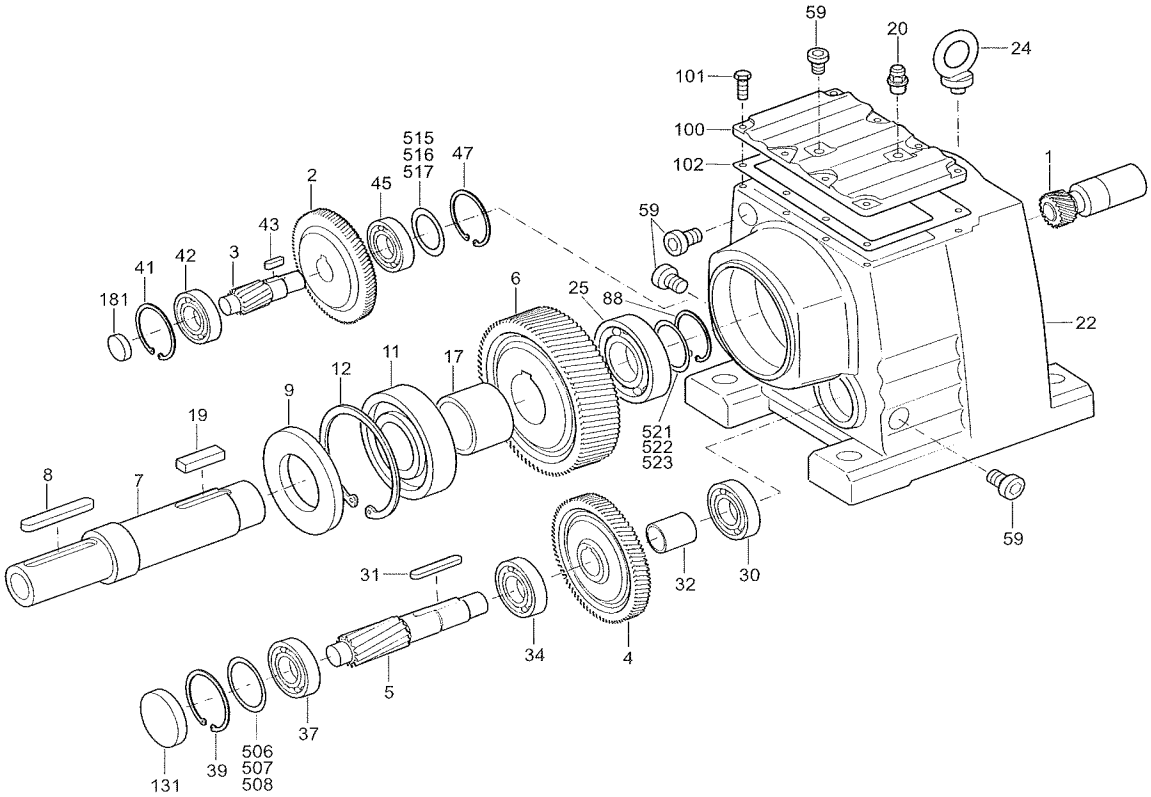

03438AXX

Figure 1: Basic structure of helical gear units

Key

1	Pinion	19	Key	42	Anti-friction bearing	507	Shim ring
2	Gear	20	Breather valve	43	Key	508	Shim ring
3	Pinion shaft	22	Gearcase	45	Anti-friction bearing	515	Shim ring
4	Gear	24	Lifting eyebolt	47	Circlip	516	Shim ring
5	Pinion shaft	25	Anti-friction bearing	59	Screw plug	517	Shim ring
6	Gear	30	Anti-friction bearing	88	Circlip	521	Shim ring
7	Output shaft	31	Key	100	Gearcase cover	522	Shim ring
8	Key	32	Spacer	101	Hex head bolt	523	Shim ring
9	Oil seal	34	Anti-friction bearing	102	Gasket		
11	Anti-friction bearing	37	Anti-friction bearing	131	Closing cap		
12	Circlip	39	Circlip	181	Closing cap		
17	Spacer	41	Circlip	506	Shim ring		

3.2 Basicstructure of parallel shaft helical gear units

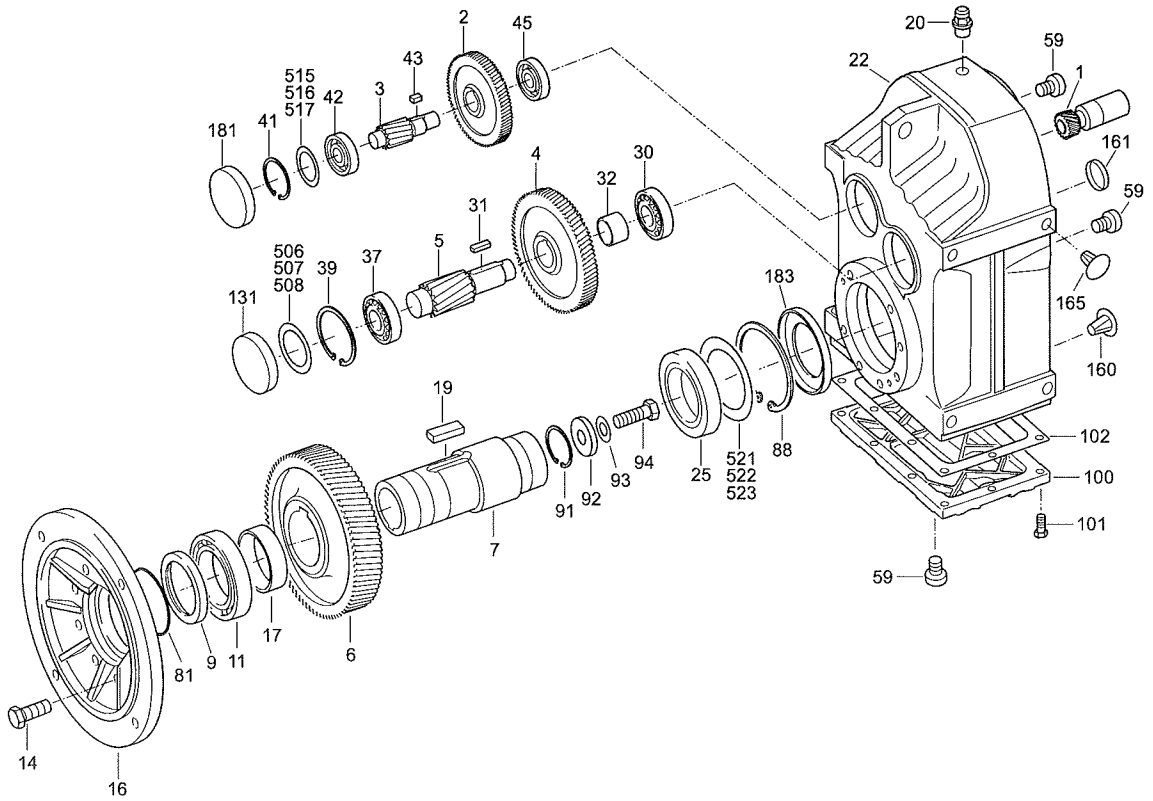

Figure 2: Basic structure of parallel shaft helical gear units

Key

1	Pinion	22	Gearcase	91	Circlip	506	Shim ring
2	Gear	25	Anti-friction bearing	92	Washer	507	Shim ring
3	Pinion shaft	30	Anti-friction bearing	93	Lock washer	508	Shim ring
4	Gear	31	Key	94	Hex head bolt	515	Shim ring
5	Pinion shaft	32	Spacer	100	Gearcase cover	516	Shim ring
6	Gear	37	Anti-friction bearing	101	Hex head bolt	517	Shim ring
7	Hollow shaft	39	Circlip	102	Gasket	521	Shim ring
9	Oil seal	41	Circlip	131	Closing cap	522	Shim ring
11	Anti-friction bearing	42	Anti-friction bearing	160	Closing plug	523	Shim ring
14	Hex head bolt	43	Key	161	Closing cap		
16	Output flange	45	Anti-friction bearing	165	Closing plug		
17	Spacer	59	Screw plug	181	Closing cap		
19	Key	81	O-ring	183	Oil seal		
20	Breather valve	88	Circlip				

3.3 Basic structure of helical-bevel gear units

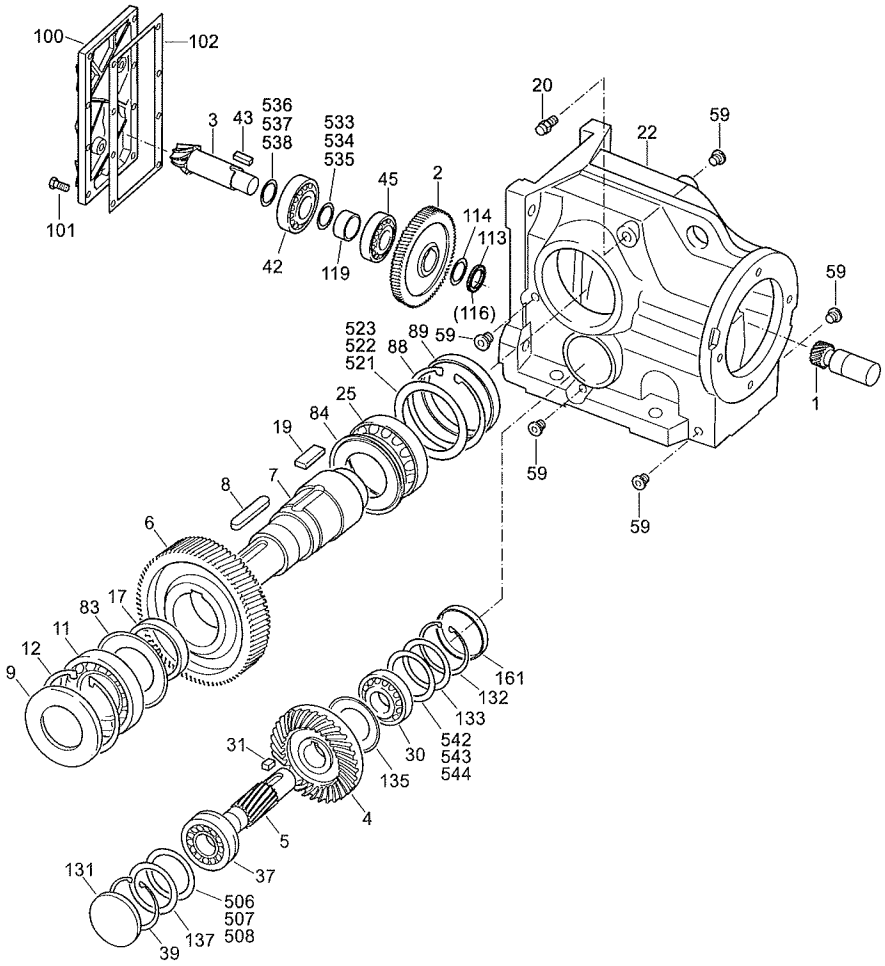

05675AXX

Figure 3: Basic structure of helical-bevel gear units

Key

1	Pinion	25	Anti-friction bearing	102	Adhesive and sealing compound	522	Shim ring
2	Gear	30	Anti-friction bearing	113	Slotted round nut	523	Shim ring
3	Pinion shaft	31	Key	114	Multi-tang washer	533	Shim ring
4	Gear	37	Anti-friction bearing	116	Thread lock	534	Shim ring
5	Pinion shaft	39	Circlip	119	Spacer	535	Shim ring
6	Gear	42	Anti-friction bearing	131	Closing cap	536	Shim ring
7	Output shaft	43	Key	132	Circlip	537	Shim ring
8	Key	45	Anti-friction bearing	133	Spacer	538	Shim ring
9	Oil seal	59	Screw plug	135	Nilos ring	542	Shim ring
11	Anti-friction bearing	83	Nilos ring	161	Closing cap	543	Shim ring
12	Circlip	84	Nilos ring	506	Shim ring	544	Shim ring
17	Spacer	88	Circlip	507	Shim ring		
19	Key	89	Closing cap	508	Shim ring		
20	Breather valve	100	Gearcase cover	521	Shim ring		
22	Gearcase	101	Hex head bolt	521	Shim ring		

3.4 Basic structure of helical-worm gear units

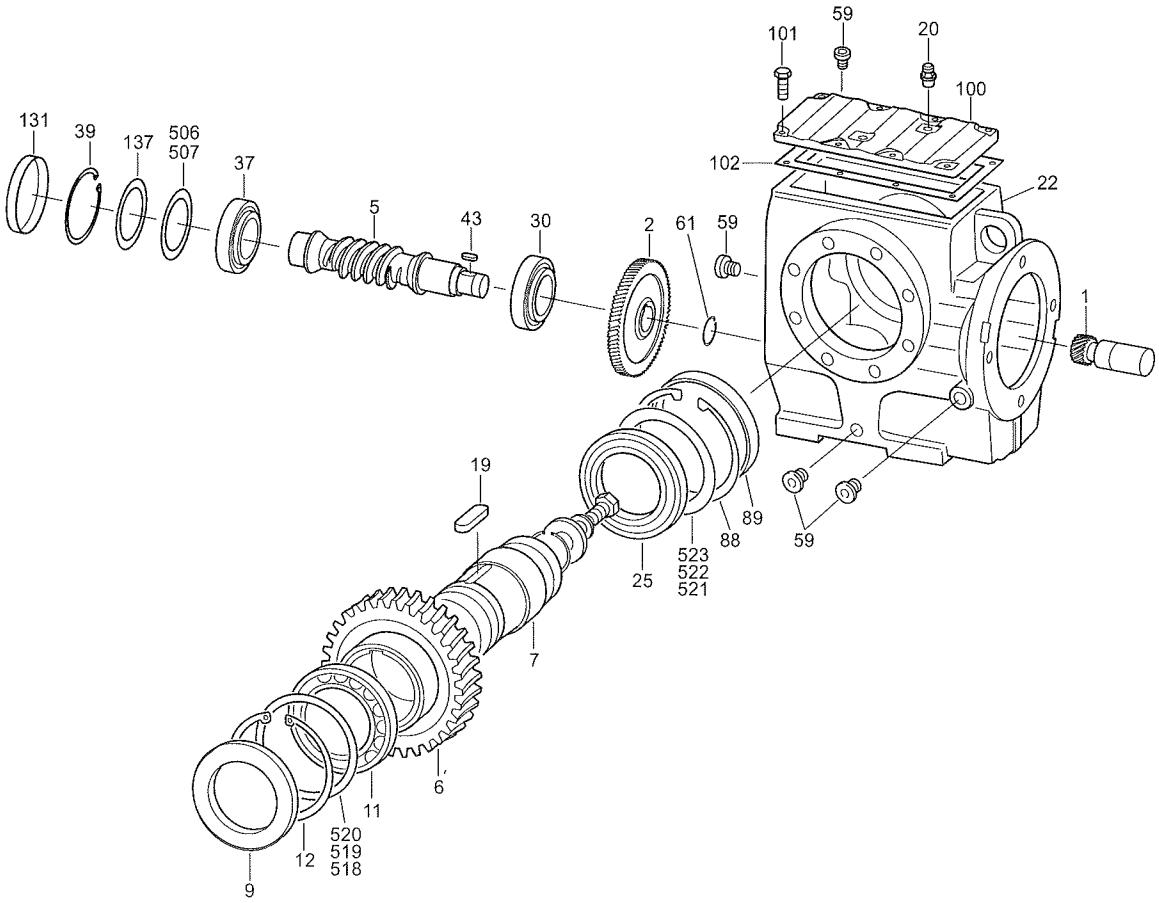

50884AXX

Figure 4: Basic structure of helical-worm gear units

Key

1	Pinion	20	Breather valve	88	Circlip	518	Shim ring
2	Gear	22	Gearcase	89	Closing cap	519	Shim ring
5	Worm	25	Anti-friction bearing	100	Gearcase cover	520	Shim ring
6	Worm gear wheel	30	Anti-friction bearing	101	Hex head bolt	521	Shim ring
7	Output shaft	37	Anti-friction bearing	102	Rubber seal	522	Shim ring
9	Oil seal	39	Circlip	131	Closing cap	523	Shim ring
11	Anti-friction bearing	43	Key	137	Spacer		
12	Circlip	59	Screw plug	506	Shim ring		
19	Key	61	Circlip	507	Shim ring		

3.5 Basic structure of SPIROPLAN® gear units

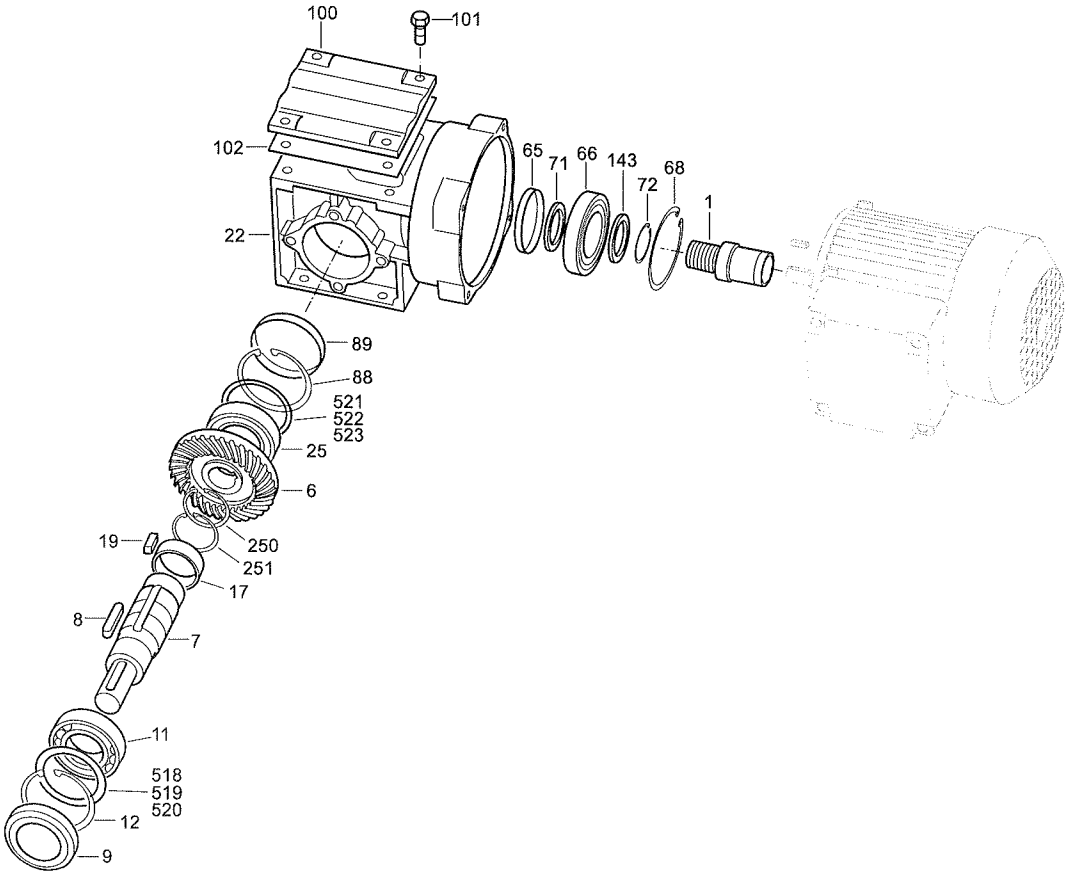

Figure 5: Basic structure of SPIROPLAN® gear units

Key

1	Pinion	19	Key	88	Circlip	251	Circlip
6	Gear	22	Gearcase	89	Closing cap	518	Shim ring
7	Output shaft	25	Anti-friction bearing	100	Gearcase cover	519	Shim ring
8	Key	65	Oil seal	101	Hex head bolt	520	Shim ring
9	Oil seal	66	Anti-friction bearing	102	Gasket	521	Shim ring
11	Anti-friction bearing	71	Spacer	132	Circlip	522	Shim ring
12	Circlip	72	Circlip	183	Oil seal	523	Shim ring
17	Spacer	143	Spacer	250	Circlip		

3.6 Nameplate, unit designation

Sample nameplate

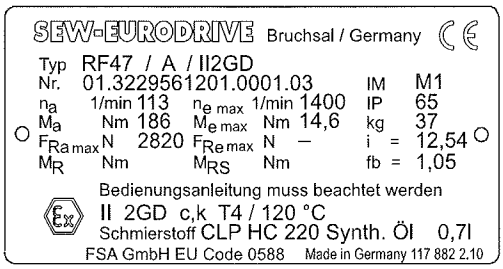

06687ADE

Figure 6: Sample nameplate

f_b		= Service factor
$F_{Ra\,max}$	[N]	= Maximum overhung load on the output side
$F_{Re\,max}$	[N]	= Maximum overhung load on the input side (with input shaft assembly AD)
i		= Gear unit reduction ratio
IM		= Mounting position
IP..		= Enclosure
$n_{e\,max}$	[1/min]	= Maximum input speed
n_a	[1/min]	= Output speed
$M_{e\,max}$	[Nm]	= Maximum input torque
M_a	[Nm]	= Output torque
M_R	[Nm]	= Overload torque when using an AR adapter
M_{RS}	[Nm]	= Locking torque of the backstop

Unit designation

Example: Helical gear unit, category II2GD

RF 47 / A / II2GD

- II2GD — Explosion-proof design to directive 94/9/EC
- A — For direct motor mounting
- 47 — Gear unit size
- RF — Helical gear unit series (flange mounted)

Example: Serial number

3229561201. 0001. 03

- 03 — Year number end digits of the year of manufacture (2-digit)
- 0001. — Part number (4-digit)
- 3229561201. — Order number (10 digits)

4 Mechanical Installation

4.1 Required tools / aids

- Set of spanners
- Torque wrench for:
  - Shrink discs
  - AQH motor adapter
  - Input shaft assembly with centering shoulder
- Mounting device
- Shims and distance rings if necessary
- Fixing devices for input and output elements
- Lubricant (e.g. NOCO® Fluid)
- Bolt adhesive (for input shaft assembly with centering shoulder), e.g. Loctite® 243
- Standard parts are not part of the delivery

Installation tolerances

Shaft end	Flanges
Diameter tolerance in accordance with DIN 748 • ISO k6 for solid shafts with Ø ≤ 50 mm • ISO m6 for solid shafts with Ø > 50 mm • ISO H7 for hollow shafts • Center bore in accordance with DIN 332, shape DR	Centering shoulder tolerance in accordance with DIN 42948 • ISO j6 with b1 ≤ 230 mm • ISO h6 with b1> 230 mm

4.2 Prerequisites for assembly

Check that the following conditions have been met:

- The data on the nameplate of the gearmotor matches the voltage supply system.
- The drive has not been damaged during transportation or storage.
- Ensure that the following requirements have been met:
  - **For standard gear units:**
    Ambient temperature according to the lubricant table in Sec. "Lubricants" (see standard).
    The drive must not be assembled in the following ambient conditions:
    - Potentially explosive atmosphere
    - Oil
    - Acids
    - Gas
    - Vapors
    - Radiation
  - **For special versions:**
    The drive configured in accordance with the ambient conditions.
  - **For helical-worm / SPIROPLAN® W gear units:**
    No large external mass moments of inertia which could exert a retrodriving load on the gear unit.
    [At η' (retrodriving) = $2 - 1/\eta < 0.5$ self-locking]

- You must clean the output shafts and flange surfaces thoroughly to ensure they are free of anti-corrosion agents, contamination or similar. Use a commercially available solvent. Do not let the solvent come into contact with the sealing lips of the oil seals – danger of damage to the material!
- When the drive is installed in abrasive ambient conditions, protect the output end oil seals against wear.

4.3 Installing the gear unit

The gear unit or gearmotor is only allowed to be installed in the specified mounting position. SPIROPLAN® gear units are not dependent on the mounting position.

The support structure must have the following characteristics:

- Level
- Vibration damping
- Torsionally rigid

Maximum permitted flatness error for foot and flange mounting (approximate values with reference to DIN ISO 1101):

- Gear unit size ≤ 67: max. 0.4 mm
- Gear unit size 77 ... 107: max. 0.5 mm
- Gear unit size 137 ... 147: max. 0.7 mm
- Gear unit size 157 ... 187: max. 0.8 mm

Do not tighten the housing legs and mounting flanges against one another and ensure that you comply with the permitted overhung and axial loads!

Secure the gearmotors with bolts of quality 8.8.

Secure the following gearmotors with bolts of quality 10.9:

- RF37, R37F with flange ∅ 120 mm
- RF47, R47F with flange ∅ 140 mm
- RF57, R57F with flange ∅ 160 mm

STOP

The oil checking and drain screws and the breather valves must be freely accessible!

At the same time, also check that the oil fill is as specified for the mounting position (see Sec. "Lubricants" / "Lubricant fill quantities" or refer to the information on the nameplate). The gear units are filled with the required oil volume at the factory. There may be slight deviations at the oil level plug as a result of the mounting position, which are permitted within the manufacturing tolerances.

Adjust the lubricant fill volumes and the position of the breather valve accordingly in the event of a change of mounting position.

Please contact our SEW customer service if you change the mounting position of K gear units to M5 or M6 or between M5 and M6.

Please contact our SEW customer service if you change the mounting position of size S47 S97 S gear units to mounting position M2.

Use plastic inserts (2 ... 3 mm thick) if there is a risk of electrochemical corrosion between the gear unit and the driven machine. The material used must have an electrical bleeder resistor < 10^9 Ω. Electrochemical corrosion can occur between various metals, for example, cast iron and high-grade steel. Also install the bolts with plastic washers! Ground the housing additionally – use the grounding bolts on the motor.

Installation in damp locations or in the open

Drives are supplied in corrosion-resistant versions for use in damp areas or in the open air. Repair any damage to the paint work (e.g. on the breather valve).

When mounting the motors onto AM, AQ, AR, AT adapters, seal the flange areas with a suitable sealing compound, e.g. Loctite® 574.

Gear unit venting

No breather plug is required for the following gear units:

- R07 in mounting positions M1, M2, M3, M5 and M6
- R17, R27 and F27 in mounting positions M1, M3, M5 and M6
- SPIROPLAN® W gear units

SEW-EURODRIVE supplies all other gear units with the breather valve installed and activated according to the particular mounting position.

Exceptions:

1. SEW supplies the following gear units with a screw plug on the vent hole provided:
   - Gear units for extended storage
   - Pivoted mounting positions, if possible
   - Gear units for mounting on a slant

   The breather valve is located in the motor terminal box. Before startup, you must replace the highest screw plug with the breather valve supplied.
2. SEW supplies a breather valve in a plastic bag for **gear head units** requiring venting on the input end.
3. **Enclosed gear units** are supplied without a breather valve.

Activating the breather valve

As a rule, the breather valve is already activated at the factory. If the breather valve has not been activated, you must remove the transport fixture from the breather valve before starting up the gear unit!

1. Breather valve with transport fixture
2. Remove the transport fixture
3. Breather valve activated

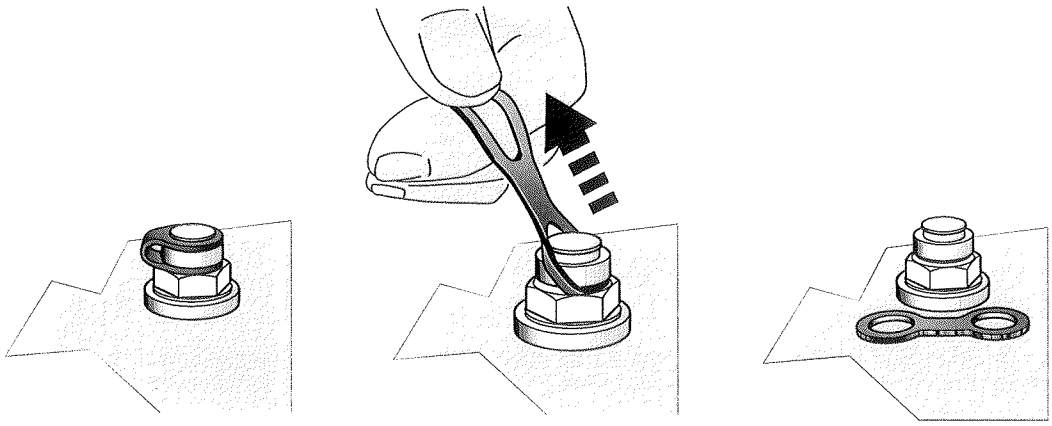

02053BXX 02054BXX 02055BXX

Painting the gear unit

If you paint or respray the drive, ensure that you cover the breather valve and oil seals carefully. Remove the strips of tape after completing the painting work.

4.4 Gear unit with solid shaft

Installing input and output elements

The following figure shows a mounting device for installing couplings or hubs on gear unit or motor shaft ends. It may be possible to dispense with the thrust bearing on the mounting device.

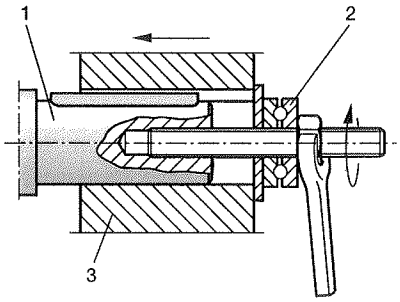

1) Gear shaft end
2) Thrust bearing
3) Coupling hub

03371BXX

Avoid impermissibly high overhung loads: Install the gear or chain sprocket according to figure **B**.

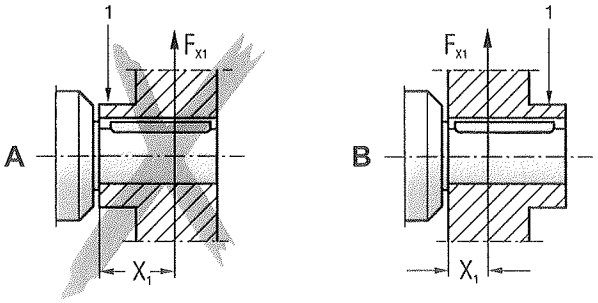

1 = Hub

A = Unfavorable
B = Correct

03369BXX

- Only use a mounting device for installing input and output elements. Use the center bore and the thread on the shaft end for positioning.
- **Never drive belt pulleys, couplings, pinions, etc. onto the shaft end by hitting them with a hammer This will damage the bearings, housing and the shaft!**
- **In the case of belt pulleys, make sure the belt is tensioned correctly in accordance with the manufacturer's instructions.**
- Power transmission elements should be balanced after fitting and must not give rise to any impermissible radial or axial forces (see the "Gearmotor" or "Explosion-Proof Drives" catalogs for permitted values).

Note:

Assembly is easier if you first apply lubricant to the output element or heat it up briefly (to 80 ... 100 °C).

Installing couplings

Couplings must be mounted and balanced according to the information provided by the coupling manufacturer:

a) Maximum and minimum clearance

b) Axial misalignment

c) Angular misalignment

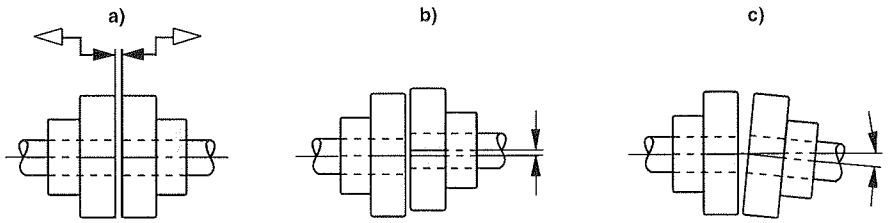

03356AXX

Figure 7: Clearance and misalignment for coupling installation

Input and output elements such as belt pulleys, couplings, etc. must be protected against contact!

4.5 Torque arms for mounted gear units

Do not place torque arms under strain during installation!

Parallel shaft helical gear units

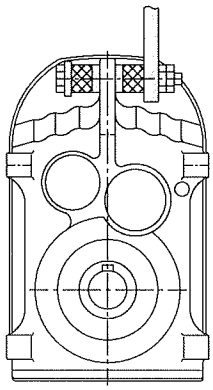

01029BXX

Figure 8: Torque arm for parallel shaft helical gear units

Helical-bevel gear units

- Bush with bearings on both ends → (1).
- Install connection end B as a mirror image of A.

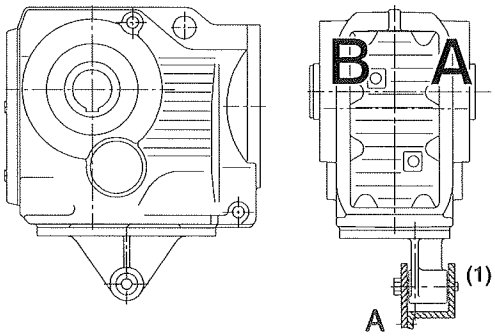

01030CXX

Figure 9: Torque arm for helical-bevel gear units

Gear unit	Bolts	Tightening torque
KA37	4 × M10 × 25 – 8.8	48 Nm
KA47	4 × M10 × 30 – 8.8	48 Nm
KA67	4 × M12 × 35 – 8.8	86 Nm
KA77	4 × M16 × 40 – 8.8	210 Nm
KA87	4 × M16 × 45 – 8.8	210 Nm
KA97	4 × M20 × 50 – 8.8	410 Nm
KA107	4 × M24 × 60 – 8.8	710 Nm
KA127	4 × M36 × 130 – 8.8	2500 Nm
KA157	4 × M36 × 130 – 8.8	2500 Nm

Helical-worm gear units

- Bush with bearings on both ends → (1).

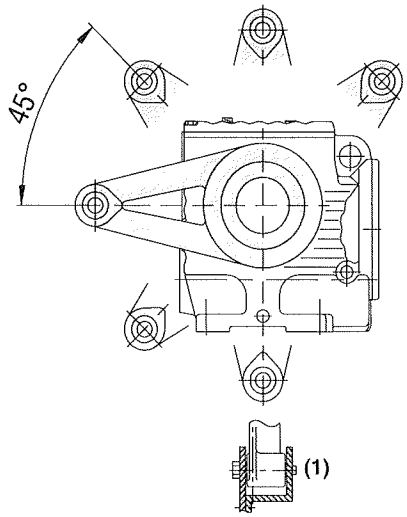

01031CXX

Figure 10: Torque arm for helical-worm gear units

Gear unit	Bolts	Tightening torque
SA37	M6 × 16 – 8.8	11 Nm
SA47	M8 × 20 – 8.8	25 Nm
SA57	M8 × 20 – 8.8	25 Nm
SA67	M12 × 25 – 8.8	86 Nm
SA77	M12 × 35 – 8.8	86 Nm
SA87	M16 × 35 – 8.8	210 Nm
SA97	M16 × 35 – 8.8	210 Nm

SPIROPLAN® W gear units

- Bush with bearings on both ends → (1)

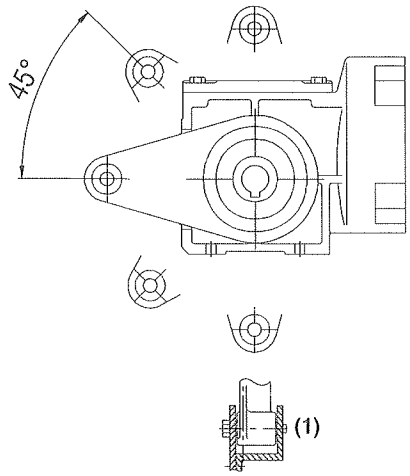

02050CXX

Figure 11: Torque arm for SPIROPLAN® W gear units

Gear unit	Bolts	Tightening torque
WA10	M6 × 16	11 Nm
WA20	M6 × 16	11 Nm
WA30	M6 × 16	11 Nm

4.6 Mounted gear unit with keyway or splined hollow shaft

For the configuration of customer shafts, please also refer to the design notes in the Gearmotors catalog!

Installation notes

1. Apply NOCO® fluid.

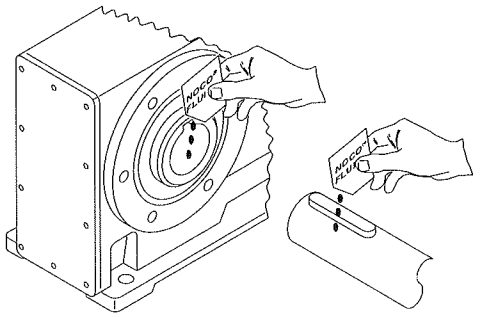

02042BXX

2. Distribute the NOCO® fluid carefully.

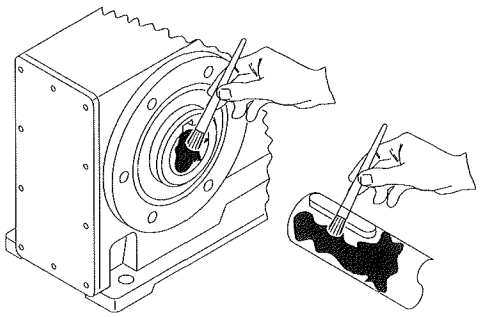

02043AXX

3. Install the shaft and secure it axially
   (mounting is facilitated by using a mounting device)
   3A: Mounting with standard scope of delivery

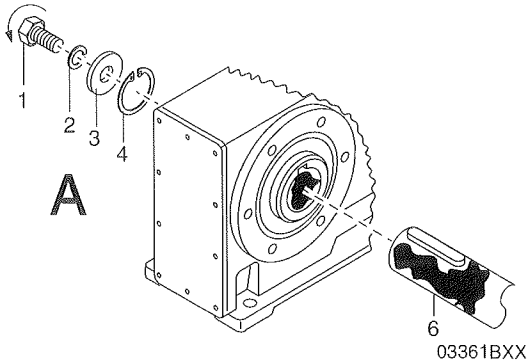

03361BXX

1 Short retaining bolt (standard scope of delivery)
2 Lock washer
3 Washer
4 Circlip
6 Customer shaft

3B: Assembly with SEW-EURODRIVE assembly/disassembly kit (→ page 26)

– Customer's shaft **with** contact shoulder

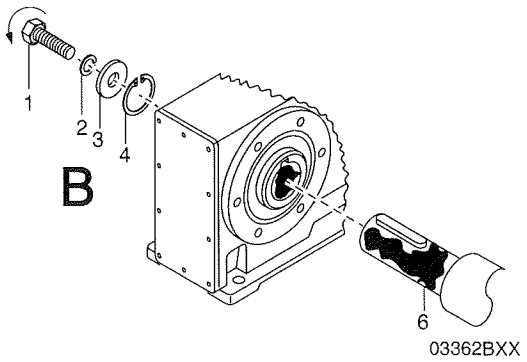

1 Retaining bolt
2 Lock washer
3 Washer
4 Circlip
6 Customer's shaft with contact shoulder

3C: Assembly with SEW-EURODRIVE assembly/disassembly kit (→ page 26)

– Customer's shaft **without** contact shoulder

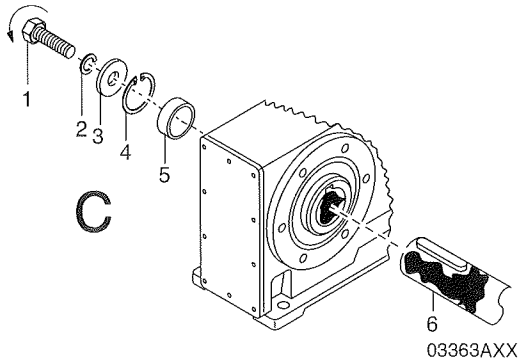

1 Retaining bolt
2 Lock washer
3 Washer
4 Circlip
5 Spacer
6 Customer's shaft without contact shoulder

4. Tighten the retaining bolt to the appropriate torque (see table).

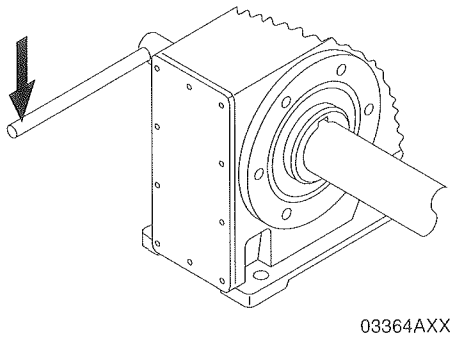

Bolt	Tightening torque [Nm]
M5	5
M6	8
M10/12	20
M16	40
M20	80
M24	200

Note:

To avoid contact corrosion, we recommend that the customer's shaft should additionally be recessed between the two contact surfaces!

Removal notes

This description is only applicable when the gear unit was assembled using the installation/removal kit from SEW-EURODRIVE(→ page 26) (see the previous description, point 3B or 3C).

1. Loosen the retaining bolt [1].
2. Remove parts 2 to 4 and, if fitted, spacer 5.

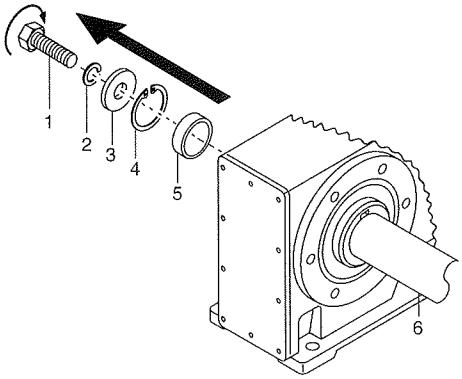

1 Retaining bolt
2 Lock washer
3 Washer
4 Circlip
5 Spacer
6 Customer shaft

03366AXX

3. Insert the forcing washer [8] and the fixed nut [7] from the SEW-EURODRIVE installation/removal kit between the customer's shaft [6] and the circlip [4].
4. Re-insert the circlip [4].
5. Screw the retaining bolt [1] back in. Now you can force the gear unit off the shaft by tightening the bolt.

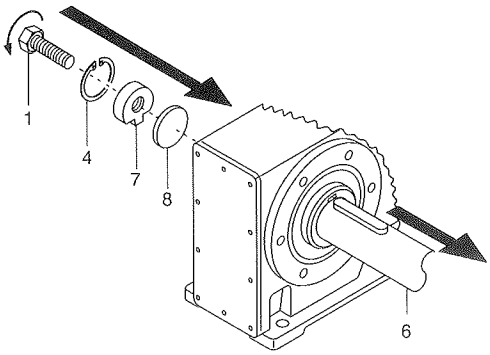

1 Retaining bolt
4 Circlip
6 Customer shaft
7 Fixed nut
8 Forcing washer

03367AXX

SEW installation/removal kit

The SEW-EURODRIVE installation/removal kit can be ordered under the following part number.

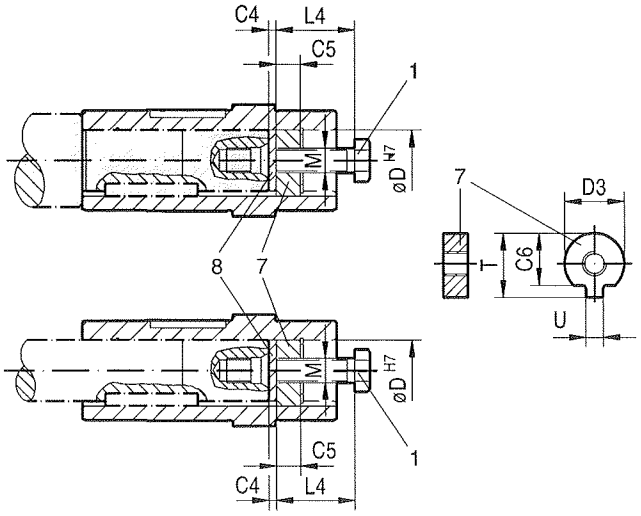

03394AXX

Figure 12: SEW-EURODRIVE installation/removal kit

1 Retaining bolt
7 Fixed nut for disassembly
8 Forcing washer

Type	D^{H7} [mm]	M[1)]	C4 [mm]	C5 [mm]	C6 [mm]	$U^{-0.5}$ [mm]	$T^{-0.5}$ [mm]	$D3^{-0.5}$ [mm]	L4 [mm]	Part number of installa-tion/removal kit
WA..10	16	M5	5	5	12	4.5	18	15.7	50	643 712 5
WA..20	18	M6	5	6	13.5	5.5	20.5	17.7	25	643,682 X
WA..20, WA..30, SA..37	20	M6	5	6	15.5	5.5	22.5	19.7	25	643 683 8
FA..27, SA..47	25	M10	5	10	20	7.5	28	24.7	35	643 684 6
FA..37, KA..37, SA..47, SA..57	30	M10	5	10	25	7.5	33	29.7	35	643 685 4
FA..47, KA..47, SA..57	35	M12	5	12	29	9.5	38	34.7	45	643 686 2
FA..57, KA..57, FA..67, KA..67, SA..67	40	M16	5	12	34	11.5	41.9	39.7	50	643 687 0
SA..67	45	M16	5	12	38.5	13.5	48.5	44.7	50	643 688 9
FA..77, KA..77, SA..77	50	M16	5	12	43.5	13.5	53.5	49.7	50	643 689 7
FA..87, KA..87, SA..77, SA..87	60	M20	5	16	56	17.5	64	59.7	60	643 690 0
FA..97, KA..97, SA..87, SA..97	70	M20	5	16	65.5	19.5	74.5	69.7	60	643 691 9
FA..107, KA..107, SA..97	90	M24	5	20	80	24.5	95	89.7	70	643 692 7
FA..127, KA..127	100	M24	5	20	89	27.5	106	99.7	70	643 693 5
FA..157, KA..157	120	M24	5	20	107	31	127	119.7	70	643 694 3

1) Retaining bolt

The SEW assembly kit for mounting the customer shaft is a recommendation from SEW-EURODRIVE. You must always check whether this design can compensate the axial loads. In particular applications (e.g. mounting mixer shafts), a different design may have to be used to secure the shaft axially. In these cases, customers can use their own devices. However, you must ensure that these designs do not cause potential sources of combustion according to DIN EN 13463 (for example, impact sparks).

4.7 *Mounted gear units with shrink disc*

Installation notes

- Do not tighten the locking bolts unless the shaft is installed - the hollow shaft could become deformed!

1. Loosen the locking bolts by a few turns (do not unscrew them completely!).

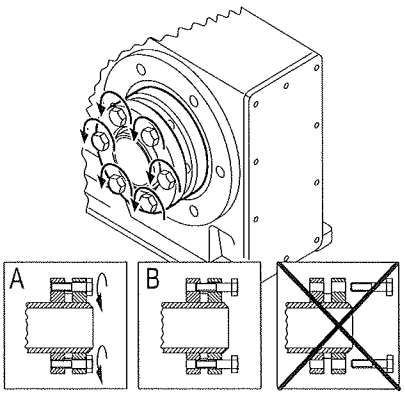

51092AXX

2. Carefully degrease the hollow shaft hole and the input shaft.

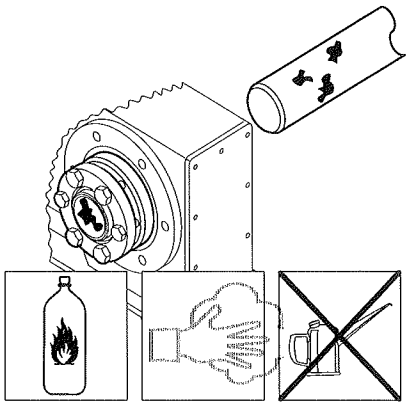

51093AXX

3. Hollow shaft/input shaft after degreasing

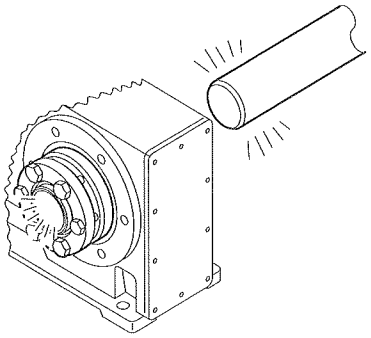

51094AXX

4. Apply NOCO® fluid to the input shaft[1] in the area of the bushing.

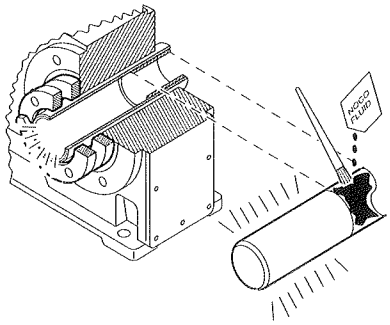

51095AXX

[1] **It is essential to make sure that the clamping area of the shrink disk is free from grease!**
For this reason, never apply NOCO® fluid directly to the bushing as the paste may be able to get into the clamping area of the shrink disk when the input shaft is put on.

5. Install the input shaft, making sure that the locking collars of the shrink disk are installed in parallel to each other[2]. For gear unit housing **with a shaft collar**, mount the **shrink disc to the stop on the shaft collar**. For gear unit housing **without a shaft collar**, mount the **shrink disk with a clearance of 1 to 2 mm from the gear unit housing**. Tighten the locking bolts with the torque wrench by working round several times from one bolt to the next (not in diametrically opposite sequence) until the bolts cannot be tightened any more. See the following table for tightening torques.

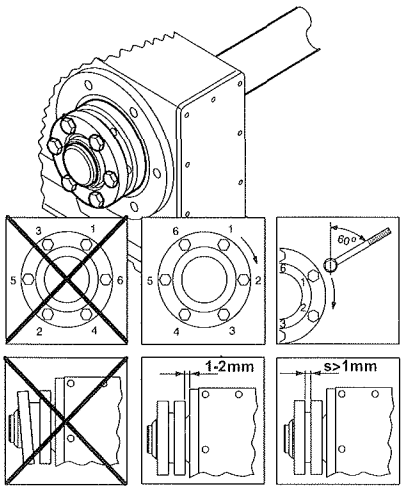

51096AXX

STOP

[2] **After installation**

- There must be a gap s > 1 mm between the locking collars
- Grease the outside of the hollow shaft in the area of the shrink disk to prevent corrosion.

Gear unit type			Bolt	Nm	∢ max.[1]
		SH37	M5	5	60°
KH37...77	FH37...77	SH47...77	M6	12	
KH87/97	FH87/97	SH87/97	M8	30	
KH107	FH107		M10	59	
KH127/157	FH127		M12	100	
KH167			M16	250	
KH187			M20	470	

1) Maximum tightening angle per cycle

Notes on removing the shrink disk

1. Unscrew the locking bolts evenly one after the other. Each locking bolt may only be unscrewed by about one quarter turn in the initial cycle. This is in order to avoid tilting and jamming the locking collars. Do not fully unscrew the locking bolts!
2. Remove the shaft or pull the hub off the shaft. (You must first remove any rust that may have formed between the hub and the end of the shaft.)
3. Pull the shrink disk off the hub.

Caution!

Risk of injury if the shrink disk is not removed correctly!

Cleaning and lubricating the shrink disk

There is no need to strip down and re-grease disassembled shrink disks before they are screwed back on.

The shrink disk only needs to be cleaned and re-greased if it is contaminated.

Use one of the following solid lubricants for the tapered surfaces.

Lubricant (Mo S2)	Sold as
Molykote 321 (lube coat)	Spray
Molykote spray (powder spray)	Spray
Molykote G Rapid	Spray or paste
Aemasol MO 19P	Spray or paste
Aemasol DIO-sétral 57 N (lube coat)	Spray

Grease the locking bolts with a multipurpose grease such as Molykote BR 2 or similar.

4.8 Mounted gear units with TorqLOC®

1. Clean the inside of the hollow shaft and the customer shaft. Ensure that all traces of grease or oil are removed.
2. Install the split ring and the bushing on the customer shaft.

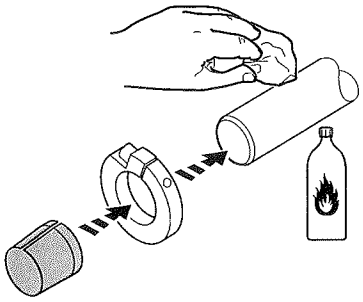

52089AXX

3. Apply NOCO® fluid to the bushing and distribute it carefully.

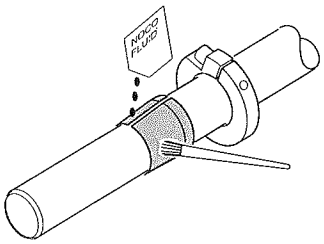

52090AXX

4. Push the gear unit onto the customer shaft.

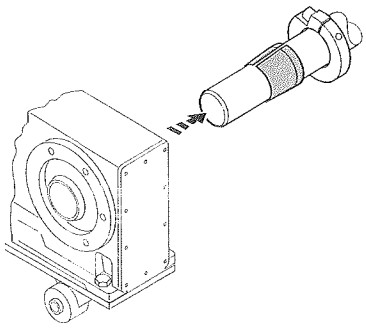

52091AXX

5. Preassemble the torque arm (do not tighten the bolts).

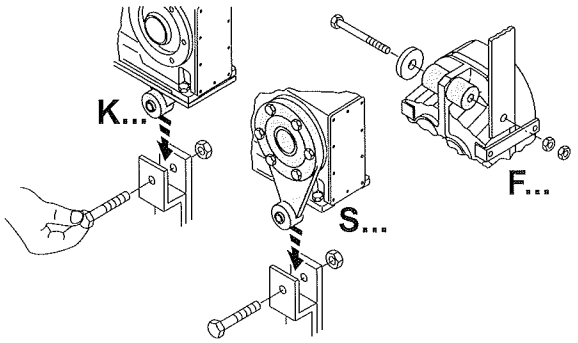

52092AXX

6. Push the busing onto the gear unit up to the stop.

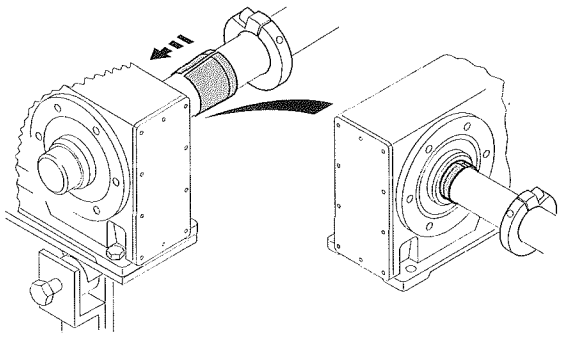

52093AXX

7. Tighten all the retaining bolts for the torque arm.

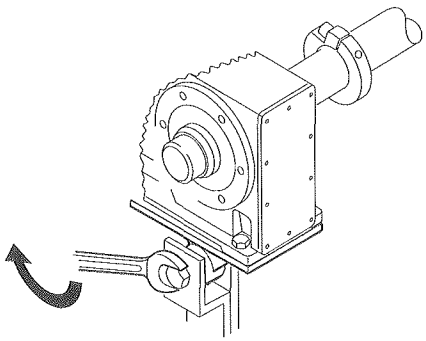

52094AXX

8. Secure the bushing with the split ring. Tighten the split ring on the bushing using the appropriate torque as specified in the following table.

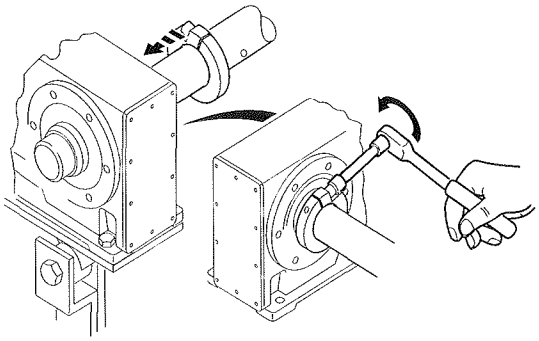

52095AXX

Type		Torque [Nm]	
KT/FT	ST	Nickel plated	Stainless steel
-	37	18	7.5
37	47	18	7.5
47	57	18	7.5
57, 67	67	35	18
77	77	35	18
87	87	35	18
97	97	35	18

9. Slide the shrink disk onto the hollow shaft. Ensure that all bolts have been loosened.

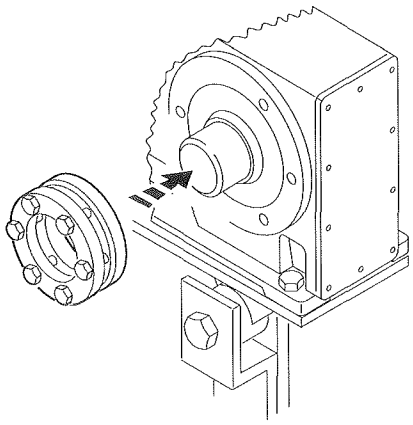

52096AXX

10. Push the counter bushing onto the customer shaft and into the hollow shaft or shrink disk right into the seat.

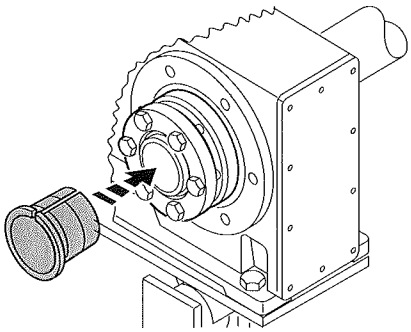

52097AXX

11. Tap lightly on the flange of the counter bushing to ensure that the socket is fitted securely in the hollow shaft.

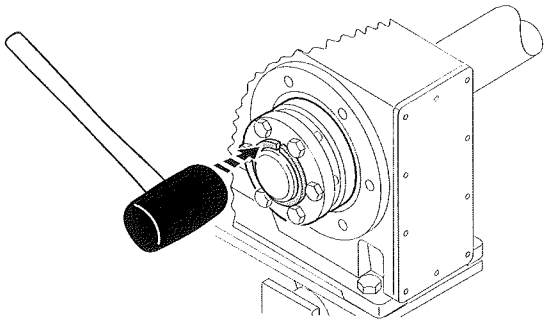

52098AXX

12. Ensure that the customer shaft is fitted in the counter bushing.

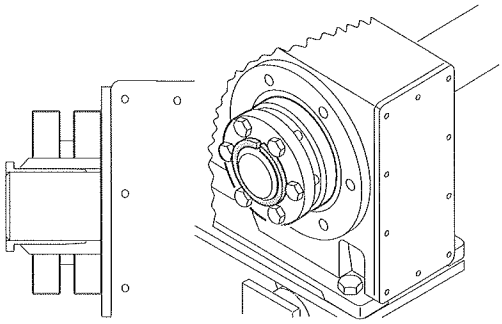

53478AXX

13. Tighten the bolts of the shrink disk by hand and ensure that the end rings of the shrink disc are parallel.

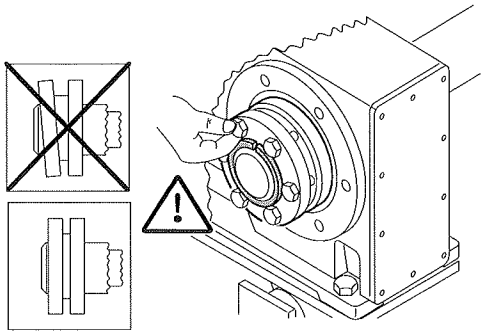

52100AXX

14. Tighten the locking bolts by working round several times from one bolt to the next (not in diametrically opposite sequence). See the table for tightening torques.

After installation, the remaining gap between the outer rings of the shrink discs must be > 0 mm.

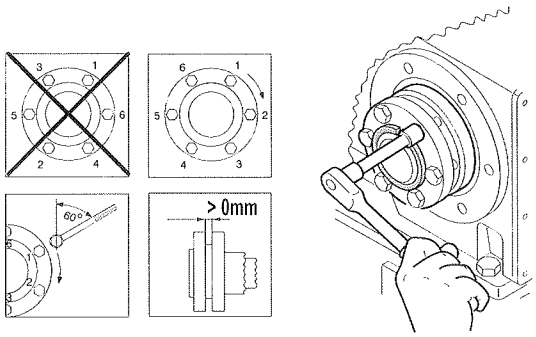

52101AXX

Type		Nickel plated	Stainless steel
KT/FT	ST	Torque [Nm]	
-	37	4.1	6.8
37	47	10	6.8
47	57	12	6.8
57, 67	67	12	15
77	77	30	30
87	87	30	50
97	97	30	50

15. The distance between the counter bushing and the hollow shaft end and between the split ring and the clamping ring must not exceed the following values. The following table lists the maximum and minimum gap width.

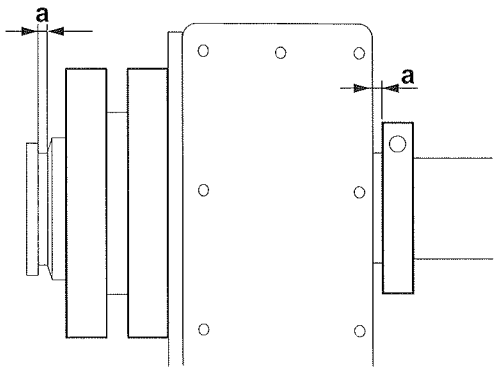

52102AXX

Type		Distance [mm]	
KT/FT	ST	a min.	a max.
-	37	3.3	5.6
37	47	3.3	5.6
47	57	5.0	7.6
57, 67	67	5.0	7.6
77	77	5.0	7.6
87	87	5.8	8.6
97	97	5.8	8.6

4.9 AM adapter coupling

IEC adapter AM63 225 / NEMA adapter AM56 365

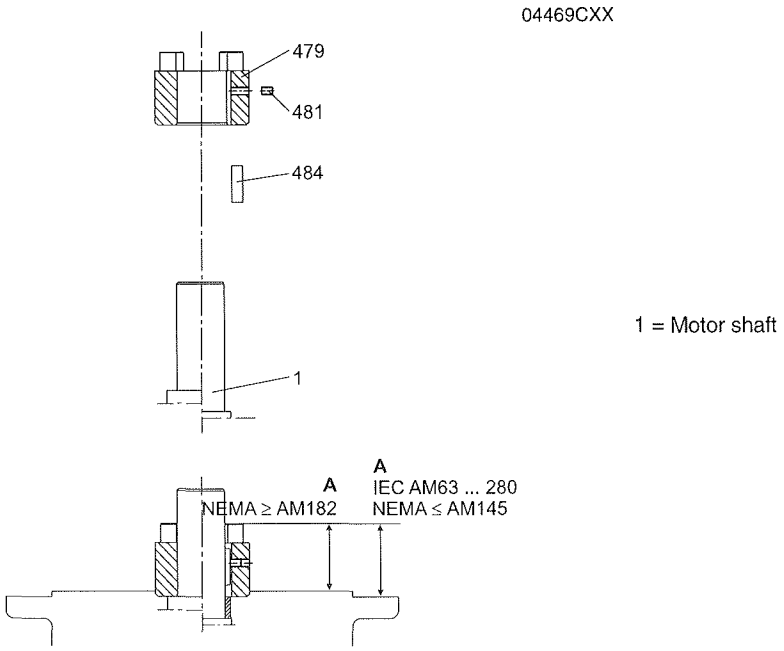

1. Clean the motor shaft and flange surfaces of the motor and adapter.
2. Remove the key from the motor shaft and replace it with the supplied key (484) (not AM63 and AM250).
3. Heat the coupling half (479) to approx. 80 – 100 °C, push the coupling half onto the motor shaft.

   Until stop at motor shaft shoulder (position to point **A** except for AM25 / AM280 and NEMA).
4. Secure key and coupling half using grub screw (481) and tightening torque T_A on motor shaft according to the table.
5. Check point **A**.
6. Seal the contact surfaces between the adapter and motor using a suitable sealing compound.
7. Mount the motor on the adapter. When doing this, make sure the coupling dogs of the adapter shaft engage in the plastic spider.

IEC AM	63 / 71	80 / 90	100 / 112	132	160 / 180	200	225	250 / 280
A	24.5	31.5	41.5	54	76	78.5	93.5	139
T_A	1.5	1.5	4.8	4.8	10	17	17	17
Thread	M4	M4	M6	M6	M8	M10	M10	M10
NEMA AM	56	143 / 145	182 / 184	213 / 215	254 / 256	284 / 286	324 / 326	364 / 365
A	46	43	55	63.5	78.5	85.5	107	107
T_A	1.5	1.5	4.8	4.8	10	17	17	17
Thread	M4	M4	M6	M6	M8	M10	M10	M10

To avoid contact corrosion, we recommend applying NOCO® fluid to the motor shaft before mounting the coupling half.

When installing a motor onto the adapter, you must use an anaerobic fluid seal to ensure that moisture cannot penetrate the adapter.

Permitted loads

The load data specified in the following table must not be exceeded when a motor is mounted.

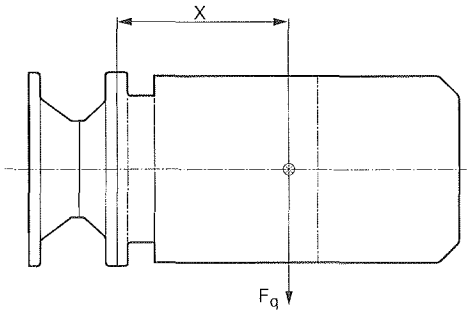

51102AXX

Adapter type			F_q 1) [N]	
IEC	NEMA	x 1) [mm]	IEC adapter	NEMA adapter
AM63/71	AM56	77	530	410
AM80/90	AM143/145	113	420	380
AM100/112	AM182/184	144	2000	1760
AM132 2)	AM213/215 2)	186	1600	1250
AM132..	AM213/215		4700	3690
AM160/180	AM254/286	251	4600	4340
AM200/225	AM324 - AM365	297	5600	5250
AM250/280	-	390	11200	-

1) The maximum permitted weight of the attached motor F_{qmax} must be reduced proportionally as the distance between the adapter flange and the middle of the motor (x) increases. When this distance is reduced, the maximum permitted weight F_{qmax} cannot be increased.

2) Diameter of the adapter drive flange: 160 mm

Adapter AM with backstop AM../RS

Check the direction of rotation of the drive before installation and startup. Please inform the SEW-EURODRIVE customer service if the direction of rotation is incorrect.

The backstop is maintenance-free in operation, and does not require any further maintenance work.

The backstops have a minimum lift-off speed depending on the size (→ following table). If the minimum lift-off speeds are violated, the backstops are subject to wear, and the resulting friction causes the temperature to increase.

Type	Maximum locking torque of backstop [Nm]	Minimum lift-off speed [1/min]
AM80/90/RS, AM143/145/RS	90	640
AM100/112/RS, AM182/184/RS	340	600
AM132/RS, AM213/215/RS	700	550
AM160/180/RS, AM254/286/RS	1200	630
AM200/225/RS, AM324-365/RS	1450	430

STOP

In rated operation, the lift-off speeds must not drop below the minimum values. The lift-off speeds are only permitted to drop below the minimum values during start-up or braking.

4.10 AQ adapter coupling

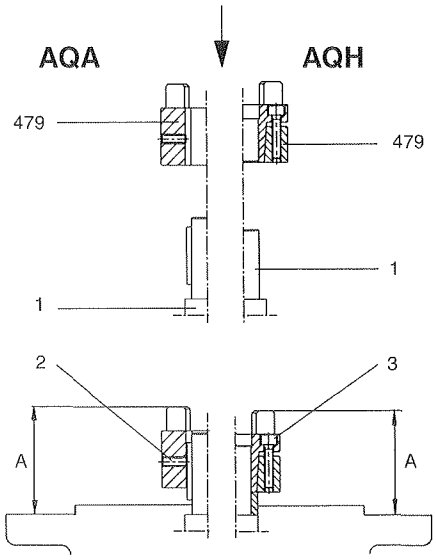

1 Motor shaft
2 Setscrew
3 Bolt

AQA = With keyway
AQH = Without keyway

53512AXX

1. Clean the motor shaft and flange surfaces of the motor and adapter.
2. **Type AQH:** Unscrew the bolts of the coupling half (479) and loosen the conical connection.
3. Heat the coupling half (80 °C – 100 °C) and push it onto the motor shaft.

   Type AQA / AQH: Up to clearance "A" (see table).
4. **Type AQH:** Tighten the bolts on the coupling half in diametrically opposite sequence

(work round several times tightening the bolts evenly one after the other) until all bolts reach the tightening torque T_A specified in the table.

Type AQA: Use a setscrew to secure the coupling half (see table).

5. Check the position of the coupling half (clearance "A", see table).

   Install motor onto the adapter making sure that the dogs of the two coupling halves engage in each other. The force that must be applied when joining the two coupling halves is dissipated after final assembly, so there is no risk of any axial load being applied to adjacent bearings.

Only for AQA, not permitted for AQH: To avoid contact corrosion, we recommend applying NOCO® fluid to the motor shaft before mounting the coupling half.

When installing a motor onto the adapter, you must use an anaerobic fluid seal to ensure that moisture cannot penetrate the adapter.

Setting dimensions, tightening torques

Type	Coupling size	Clearance "A" [mm]	Bolts DIN 912		Tightening torque T_A [Nm]	
			AQA	AQH	AQA	AQH
AQA /AQH 80 /1/2/3	19/24	44,5	M5	M4	2	3
AQA /AQH 100 /1/2		39				
AQA /AQH 100 /3/4		53				
AQA /AQH 115 /1/2		62				
AQA /AQH 115 /3	24/28	62	M5	M5	2	6
AQA /AQH 140 /1/2		62				
AQA /AQH 140 /3	28/38	74,5	M8	M5	10	6
AQA /AQH 190 /1/2		76,5				
AQA /AQH 190 /3	38/45	100	M8	M6	10	10

4.11 AD input shaft assembly

Please refer to Sec. "Installing input and output shafts" for information on mounting of input elements.

Cover with motor mounting platform AD../P

Mounting the motor and adjusting the motor mounting platform.

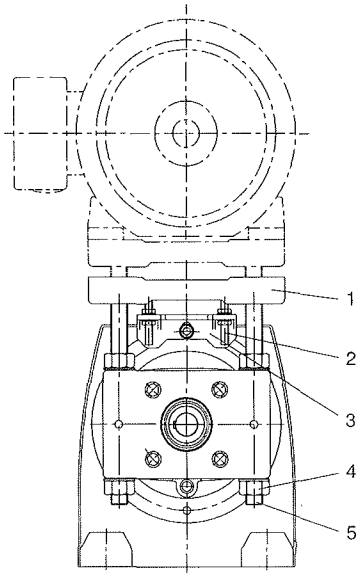

1 Motor mounting platform
2 Stud bolt (only AD6/P / AD7/P)
3 Support (only AD6/P / AD7/P)
4 Nut
5 Threaded column

03519BXX

1. Set the motor mounting platform to the required mounting position by evenly tightening the adjusting nuts. It may be necessary to remove the lifting eyebolt from helical gear units in order to achieve the lowest adjustment position. Touch up any damage to the paint work.
2. Align the motor on the motor mounting platform (shaft ends must be in alignment) and secure it.
3. Mount the input elements on the input shaft end and the motor shaft. Line them up with one another. Correct the motor position again if necessary.
4. Put on traction elements (V-belt, chain, etc.) and apply a preload by evenly adjusting the motor mounting platform. Do not stress the motor mounting platform and the columns against one another when doing this.
5. Tighten the threaded columns using the nuts which are not used for adjustment.

Only AD6/P and AD7/P:

Unscrew the nuts on the stud bolts before adjustment to allow the stud bolts to move axially in the support without restriction. Do not tighten the nuts until the final adjustment position has been achieved. Do not adjust the motor mounting platform using the support.

Type with centering shoulder AD../ZR

Mounting applications on the input shaft assembly with centering shoulder.

1. Retaining bolts of a suitable length must be used to secure the application. The length l of the new bolts is calculated as follows:

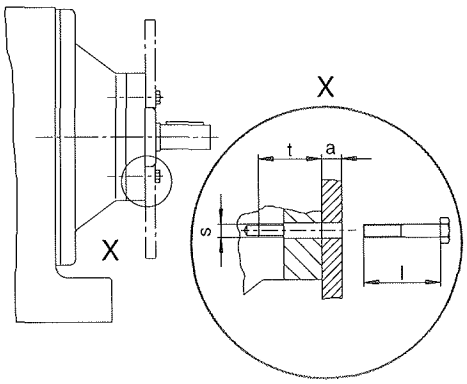

l = t + a
t = Screw-in depth (see table)
a = Thickness of the application
s = Retaining thread (see table)

02725CXX

Round down the calculated bolt length to the next smaller standard length.

2. Remove the retaining bolts from the centering shoulder.
3. Clean the contact surface and the centering shoulder.
4. Clean the threads of the new bolts and apply a bolt locking compound (e.g. Loctite 243) to the first few threads.
5. Position the application against the centering shoulder and tighten the retaining bolts to the specified tightening torque T_A (see table).

Type	Screw-in depth t [mm]	Retaining thread s	Tightening torque T_A for connection bolts in strength class 8.8 [Nm]
AD2/ZR	25,5	M8	25
AD3/ZR	31,5	M10	48
AD4/ZR	36	M12	86
AD5/ZR	44	M12	86
AD6/ZR	48,5	M16	210
AD7/ZR	49	M20	410
AD8/ZR	42	M12	86

Permitted loads

The load values specified in the following table must not be exceeded.

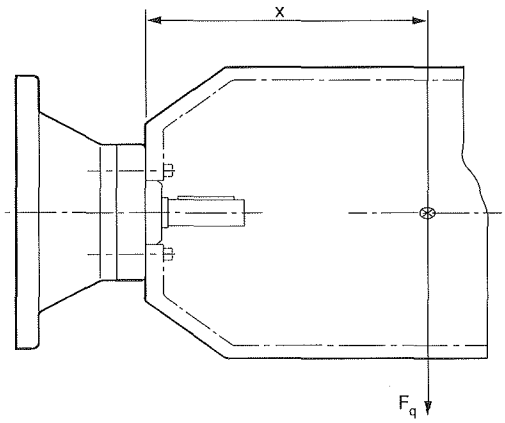

53513AXX

Type	x[1] [mm]	F_q[1] [N]
AD2/ZR	193	330
AD3/ZR	274	1400
AD4/ZR[2]	361	1120
AD4/ZR		3300
AD5/ZR	487	3200
AD6/ZR	567	3900
AD7/ZR	663	10000
AD8/ZR	516	4300

1) Maximum load values for connection bolts in strength class 8.8. The maximum permitted weight of the attached motor F_{qmax} must be reduced proportionally as the distance between the adapter flange and the middle of the motor (x) increases When this distance is reduced, the F_{qmax} cannot be increased.

2) Diameter of the adapter output flange: 160 mm

Cover with backstop AD../RS

Check the direction of rotation of the drive before installation and startup. Please inform the SEW-EURODRIVE customer service if the direction of rotation is incorrect.

The backstop is maintenance-free in operation, and does not require any further maintenance work.

The backstops have a minimum lift-off speed depending on the size (→ following table). If the minimum lift-off speeds are violated, the backstops are subject to wear, and the resulting friction causes the temperature to increase.

Type	Maximum locking torque of backstop [Nm]	Minimum lift-off speed [1/min]
AD2/RS	90	640
AD3/RS	340	600
AD4/RS	700	550
AD5/RS	1200	630
AD6/RS	1450	430
AD7/RS	1450	430
AD8/RS	2860	430

STOP

In rated operation, the lift-off speeds must not drop below the minimum values. The lift-off speeds are only permitted to drop below the minimum values during start-up or braking.

5 Startup

Prior to startup check that the oil level is as specified for the mounting position. The oil checking and drain screws and the breather valves must be freely accessible.

5.1 Startup of helical-worm and SPIROPLAN® W gear units

Note: The direction of rotation of the output shaft in series S..7 helical-worm gear units has been changed from CW to CCW; this is different from the S..2 series. Change direction of rotation: Swap over two motor feeder cables.

Run-in period

SPIROPLAN® and helical-worm gear units require a run-in period of at least 24 hours before reaching their maximum efficiency. A separate run-in period applies for each direction of rotation if the gear unit is operated in both directions of rotation. The table shows the average power reduction during the run-in period.

No. of starts	Worm		Spiroplan®	
	Power reduction	i range	Power reduction	i range
1 start	ca. 12 %	ca. 50...280	ca. 15 %	approx. 40 ... 75
2 start	ca. 6 %	ca. 20...75	ca. 10 %	ca. 20...30
3 start	ca. 3 %	ca. 20...90	ca. 8 %	ca. 15
4 start	-	-	ca. 8 %	ca. 10
5 start	ca. 3 %	ca. 6...25	ca. 5 %	ca. 8
6 start	ca. 2 %	ca. 7...25	-	-

5.2 Startup of helical, parallel shaft helical and helical-bevel gear units

No special startup instructions are required for helical, parallel shaft helical and helical-bevel gear units providing the gear units have been installed in accordance with Sec. "Mechanical Installation".

6 Inspection and Maintenance

6.1 Inspection and maintenance intervals

Frequency	What to do?
• Every 3000 machine hours, at least every 6 months.	• Check oil and oil level. • Check the seals visually for leakage. • For gear units with a torque arm: Check the rubber buffer and change it, if necessary
• Depending on the operating conditions (see chart below), every 3 years at the latest. • According to oil temperature.	• Change mineral oil.
	• Replace anti-friction bearing grease (recommendation). • Replace oil seal (do not install it in the same track).
• Depending on the operating conditions (see chart below), every 5 years at the latest. • According to oil temperature.	• Change synthetic oil
	• Replace anti-friction bearing grease (recommendation). • Replace oil seal (do not install it in the same track).
• Gear unitsR07, R17, R27, F27 and Spiroplan® are have lubrication for life and are therefore maintenance-free	
• Varying (depending on external factors).	• Touch up or renew the surface/anticorrosion coating.

6.2 Lubricant change intervals

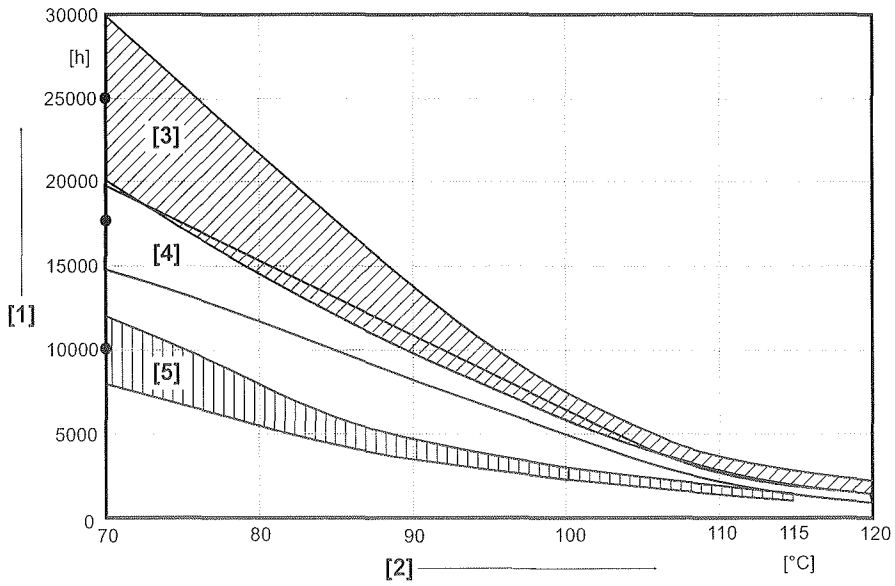

53232AXX

Figure 13: Oil change intervals for standard gear units under normal environmental conditions

[1] Operating hours
[2] Sustained oil bath temperature
- Average value per oil type at 70 °C

[3] CLP PG
[4] CLP HC / HCE
[5] CLP / HLP / E

6.3 Inspection and maintenance of the gear unit

Do not intermix synthetic lubricants and do not mix synthetic and mineral lubricants together!

The standard lubricant is mineral oil (except for Spiroplan® gear units).

The position of the oil level and oil drain plug and the breather valve depends on the mounting position. Refer to the diagrams of the mounting positions.

Checking the oil level

1. **De-energize the gearmotor and secure it to prevent it from being switched on inadvertently!**

   Wait until the gear unit has cooled off – Danger of burns!
2. Refer to Sec. "Installing the gear unit" when changing the mounting position!
3. For gear units with an oil level plug: Remove the oil level plug, check the fill level and correct it if necessary. Screw the oil level plug back in.

Checking the oil

1. **De-energize the gearmotor and secure it to prevent it from being switched on inadvertently!**

   Wait until the gear unit has cooled off – Danger of burns!
2. Remove a little oil from the oil drain plug.
3. Check the oil consistency.
   - Viscosity
   - If you can see that the oil is heavily contaminated, we recommend that you change the oil even if this is outside the service intervals specified in "Inspection and maintenance periods".
4. For gear units with an oil level plug: Remove the oil level plug, check the fill level and correct it if necessary. Screw the oil level plug back in.

Changing the oil

Only change the oil when the gear unit is at operating temperature.

De-energize the gearmotor and secure it to prevent it from being switched back on inadvertently!

Wait until the gear unit cools down - Danger of burns!

Note: The gear unit must still be warm otherwise the high viscosity of excessively cold oil will make it harder to drain the oil correctly.

With oil drain plug / oil level screw

1. Place a container underneath the oil drain plug
2. Remove the oil level plug, breather plug/breather valve and oil drain plug.
3. Drain all the oil.
4. Screw in the oil drain plug.
5. Pour in new oil of the same type through the vent hole (if changing the oil type, please first contact our customer service). Do not mix synthetic lubricants.
   - Pour in the volume of oil in accordance with the mounting position (see Sec. "Lubricant fill quantities") or as specified on the nameplate.
   - Check at the oil level plug.
6. Screw the oil level plug back in
7. Screw in the breather plug/breather valve.

Without oil drain plug / oil level plug

1. Remove cover plate.
2. Drain the oil through the cover plate opening.
3. Pour in new oil of the same type through the vent hole (if changing the oil type, please first contact our customer service). Do not mix synthetic lubricants.
   - Pour in the volume of oil in accordance with the mounting position (see Sec. "Lubricant fill quantities") or as specified on the nameplate.
4. Check the oil level (→ Sec. "Check oil level for gear units with oil level plug")
5. Attach cover plate (observe the tightening torque and series → Sec. "Check the oil level for gear units without an oil level plug")

Changing the oil seal

1. **De-energize the gearmotor and secure it to prevent it from being switched on inadvertently!**

   Wait until the gear unit has cooled off – Danger of burns!
2. When changing the oil seal, ensure that there is a sufficient grease reservoir between the dust lip and protective lip, depending on the type of gear unit.
3. If you use double oil seals, the space has to be filled one-third with grease.

6.4 Inspection / maintenance of AM / AQA adapters

Frequency	What to do?
• Every 3000 machine hours, at least every 6 months	• Check torsional play • Visually check the elastic annular gear • Check the adapter visually for leakage
• After 25000 - 30000 machine hours	• Renew the anti-friction bearing grease • Replace oil seal (do not install it in the same track) • Change the elastic annular gear.

6.5 Inspection / maintenance of AD adapters

Frequency	What to do?
• Every 3000 machine hours, at least every 6 months	• Check running noise for possible bearing damage • Check the adapter visually for leakage
• After 25000 - 30000 machine hours	• Renew the anti-friction bearing grease
	• Change the oil seal

7 Malfunctions

Customer service

Please have the following information to hand if you require the assistance of our customer service:
- Data from the nameplate (complete)
- Nature and extent of the fault
- Time and peripheral circumstances of the fault
- Presumed cause

7.1 Gear unit malfunctions

Problem	Possible cause	Remedy
Unusual, regular running noise	A Meshing/grinding noise: Bearing damage. B Knocking noise: Irregularity in the gearing	A Check the oil (see Sec. "Inspection and Maintenance"), change bearings B Contact customer service
Unusual, irregular running noise	Foreign bodies in the oil	• Check the oil (see Sec. "Inspection and Maintenance") • Stop the drive, contact customer service
Oil leaking[1)] • From the gear cover plate • From the motor flange • From the motor oil seal • From the gear unit flange • From the output end oil seal	A Rubber seal on the gear cover plate leaking B Seal defective C Gear unit not vented	A Tighten the bolts on the gear cover plate and observe the gear unit. Oil still leaking: Contact customer service B Contact customer service C Vent the gear unit (see Sec. "Mounting Positions")
Oil leaking from breather valve	A Too much oil B Drive operated in incorrect mounting position C Frequent cold starts (oil foams) and/or high oil level	A Correct the oil level (see Sec. "Inspection and Maintenance") B Mount the breather valve correctly (see Sec. "Mounting Positions") and correct the oil level (see "Lubricants")
Output shaft does not turn although the motor is running or the input shaft is rotated	Connection between shaft and hub in gear unit interrupted	Send in the gear unit/gearmotor for repair

1) Short-term oil/grease leakage at the oil seal is possible in the run-in phase (24 hours running time).

7.2 AM / AQA / AL adapter malfunctions

Problem	Possible cause	Remedy
Unusual, regular running noise	Meshing/grinding noise: Bearing damage	Contact SEW-EURODRIVE customer service
Oil leaking	Seal defective	Contact SEW-EURODRIVE customer service
Output shaft does not turn although the motor is running or the input shaft is rotated	Connection between shaft and hub in gear unit interrupted	Send the gear unit to SEW-EURODRIVE for repair.
Change in running noise and / or vibrations occur	A Annular gear wear, short-term torque transfer through metal contact B Bolts to secure hub axially are loose.	A Change the annular gear B Tighten the bolts
Premature wear in annular gear	A Contact with aggressive fluids / oil; ozone influence; too high ambient temperatures etc, which can cause a change in the physical properties of the annular gear. B Impermissibly high ambient/contact temperature for the annular gear; maximum permitted temperature –20 °C to +80 °C. C Overload	Contact SEW-EURODRIVE customer service

7.3 AD input shaft assembly malfunctions

Problem	Possible cause	Remedy
Unusual, regular running noise	Meshing/grinding noise: Bearing damage.	Contact SEW-EURODRIVE customer service
Oil leaking	Seal defective	Contact SEW-EURODRIVE customer service
Output shaft does not turn although the input shaft is rotated.	Connection between shaft and hub in gear unit or cover interrupted	Send the gear unit to SEW-EURODRIVE for repair.

8 Mounting Positions

8.1 General information on mounting positions

Mounting position designation

SEW differentiates between six mounting positions M1 ... M6 for gear units. The following figure shows the spatial orientation of the gearmotor in mounting positions M1 ... M6.

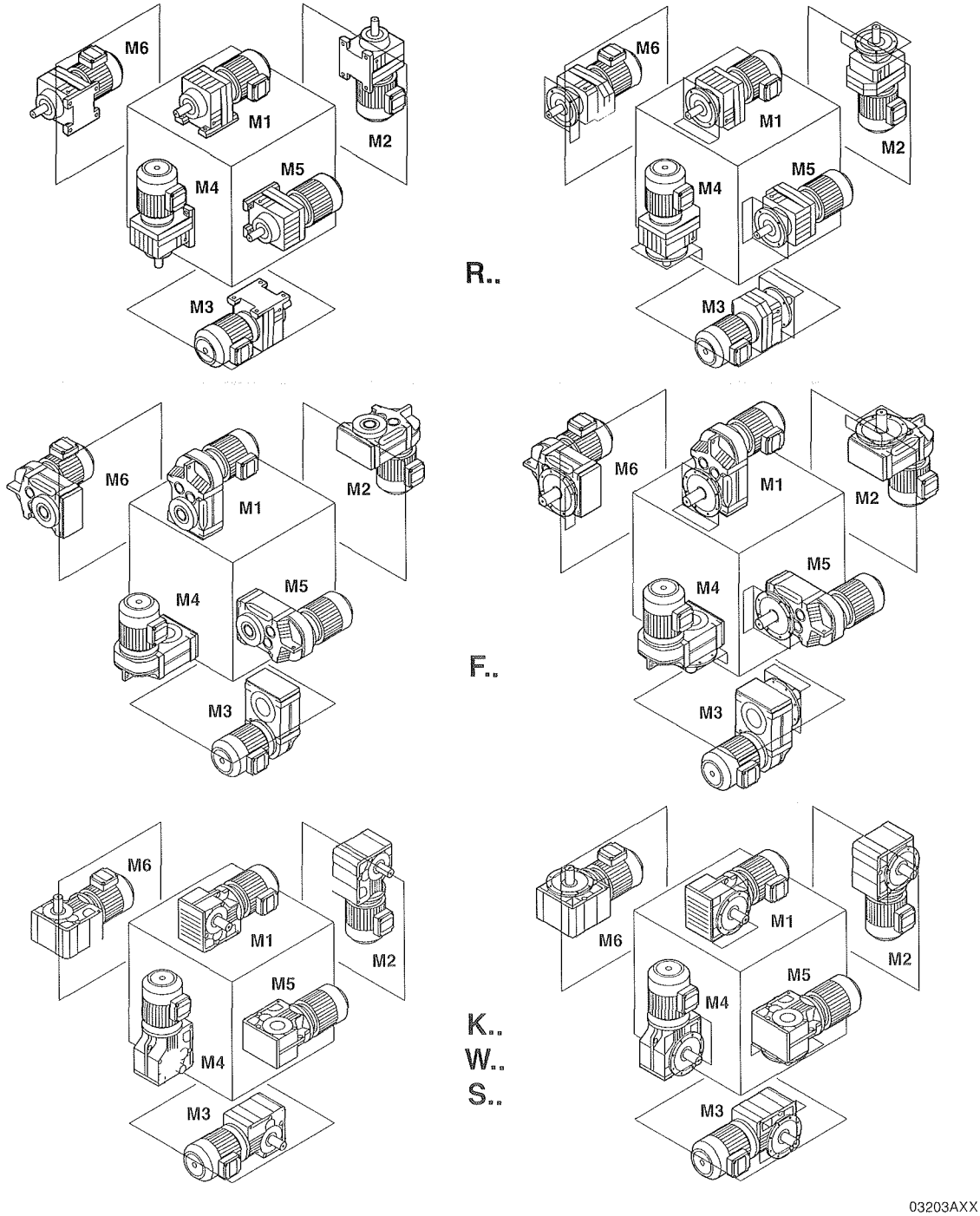

Figure 14: Depiction of mounting positions M1 ... M6

8.2 *Key to the mounting position sheets*

SPIROPLAN® gearmotors do not depend on any particular mounting position. However, mounting positions M1 to M6 are also shown for SPIROPLAN® gearmotors to assist you in working with this documentation.

Important: SPIROPLAN® gearmotors cannot be equipped with breather valves, oil level plugs or drain plugs.

Symbols used

The following table shows the symbols used in the mounting position sheets and what they mean:

Symbol	Meaning
	Breather valve
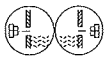	Oil level plug
	Oil drain plug

Churning losses

*

Increased churning losses may arise in some mounting positions. Contact SEW-EURODRIVE in case of the following combinations:

Mounting position	Gear unit type	Gear unit size	Input speed [1/min]
M2, M4	R	97 ... 107	> 2500
		> 107	>1500
M2, M3, M4, M5, M6	F	97 ... 107	> 2500
		> 107	> 1500
	K	77 ... 107	> 2500
		> 107	> 1500
	S	77 ... 97	> 2500

8.3 Mounting positions for R helical gearmotors

R07-R167

04 040 200

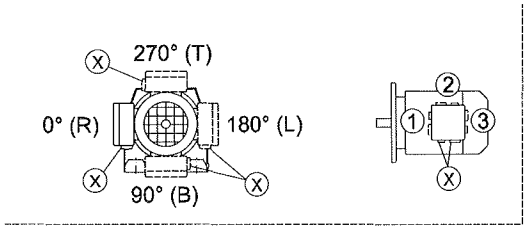

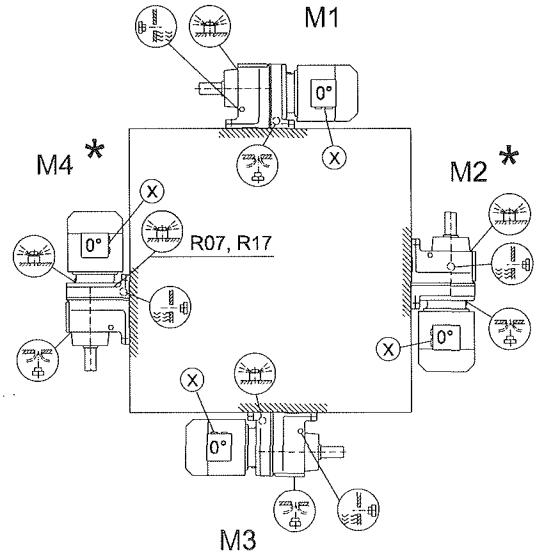

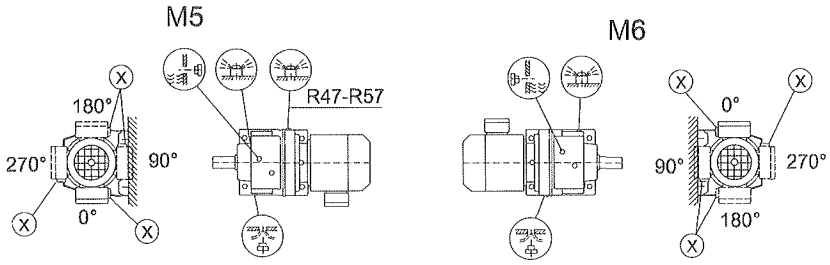

R07		M1, M2 , M3 , M5 , M6
R17, R27		M1, M3 , M5 , M6
R07, R17, R27		
R47, R57		M5

* → page 51

RF07-RF167

04 041 200

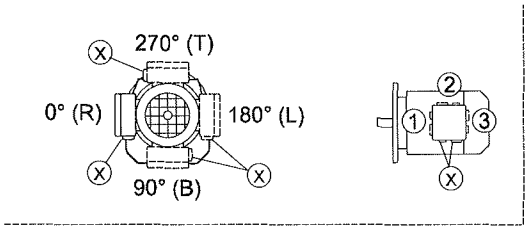

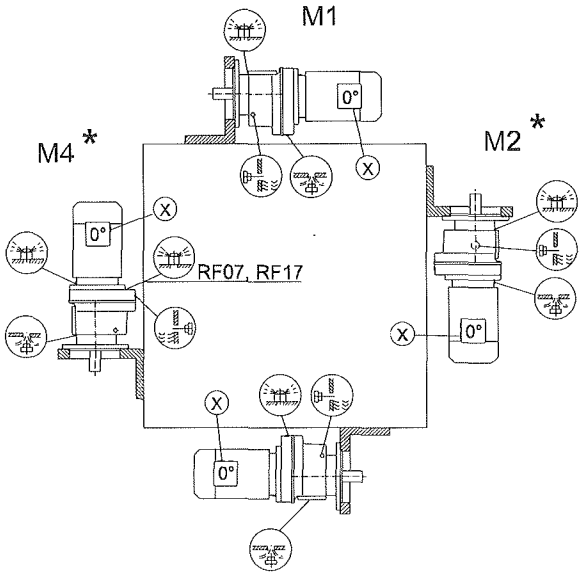

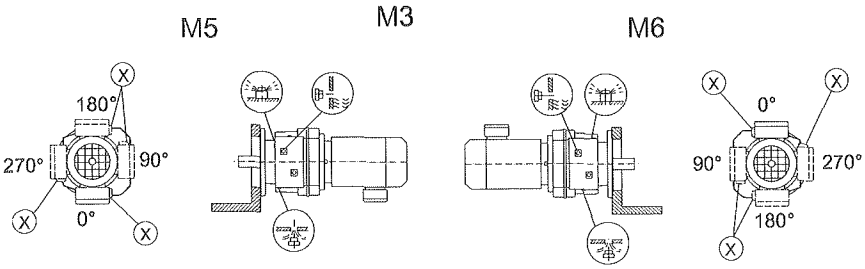

RF07		M1, M2 , M3 , M5 , M6
RF17, RF27		M1, M3 , M5 , M6
RF07, RF17, RF27		
RF47, RF57		M5

* → page 51

R07F-R87F

04 042 200

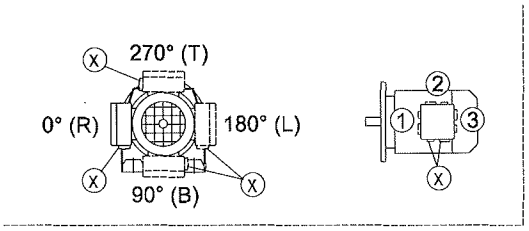

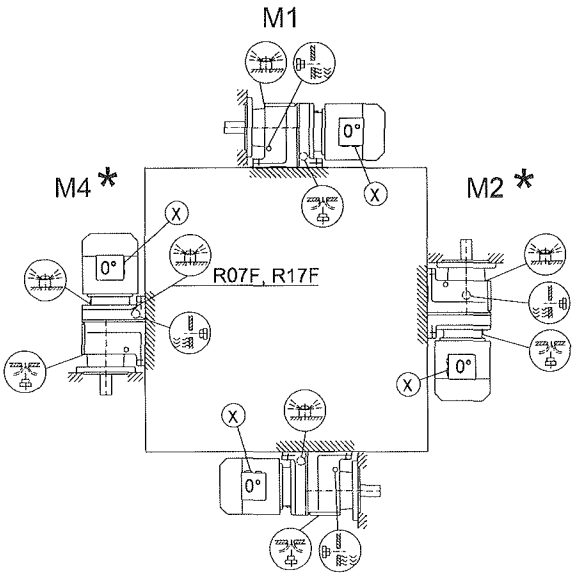

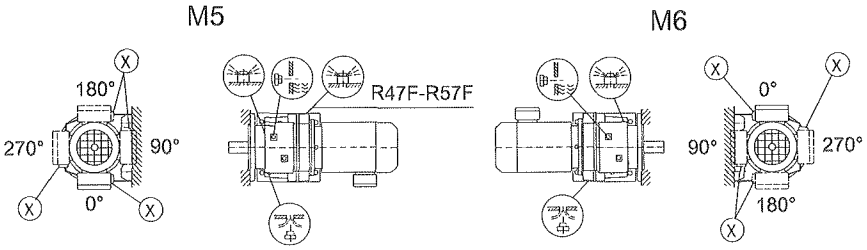

R07F		M1, M2 , M3 , M5 , M6
R17F, R27F		M1, M3 , M5 , M6
R07F, R17F, R27F		
R47F, R57F		M5

* → page 51

Important: See the (i) information in the "Gearmotors" catalog, section "Project Planning for Gear Units/Overhung and axial loads."

8.4 *Mounting positions of RX helical gearmotors*

RX57-RX107

04 043 200

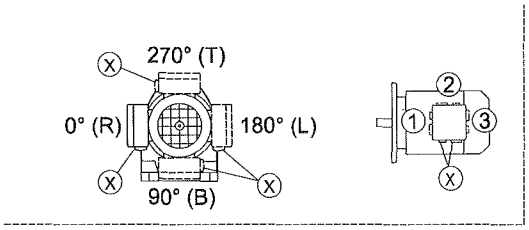

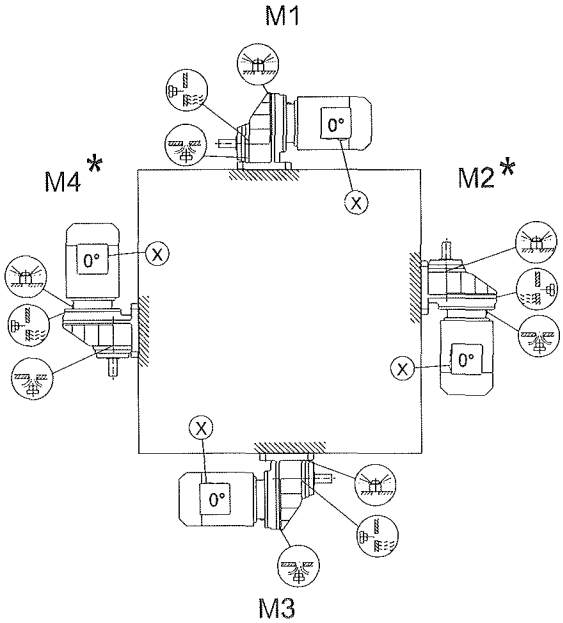

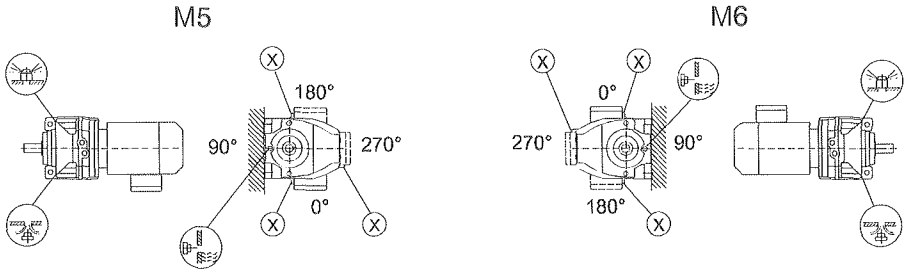

* → page 51

RXF57 - RXF107

04 044 200

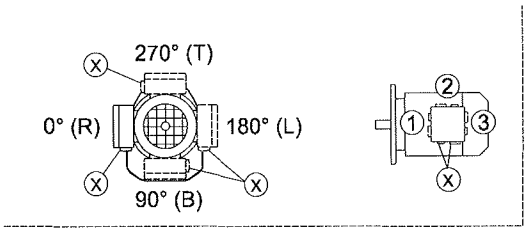

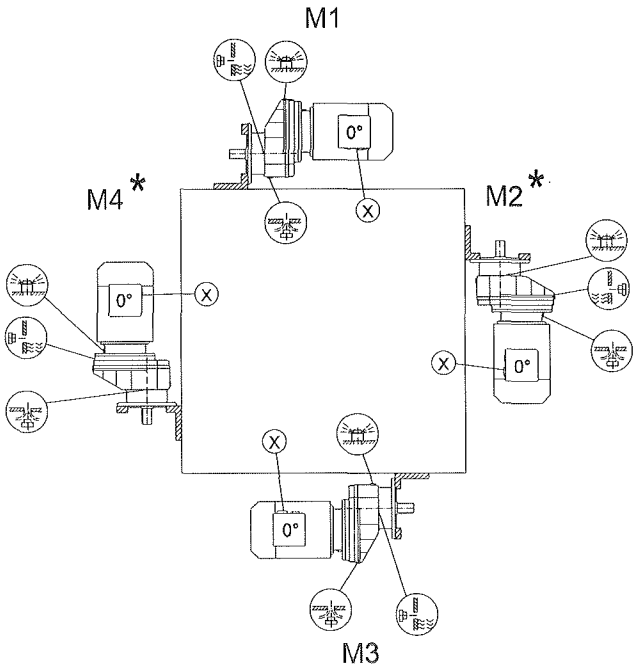

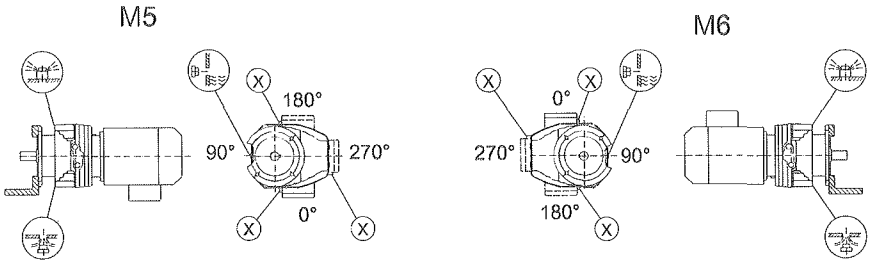

* → page 51

8.5 Mounting positions for parallel shaft helical gearmotors

F/FA..B/FH27B-157B, FV27B-107B

42 042 200

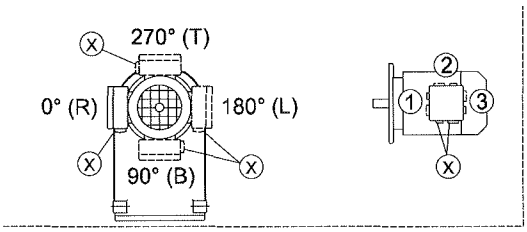

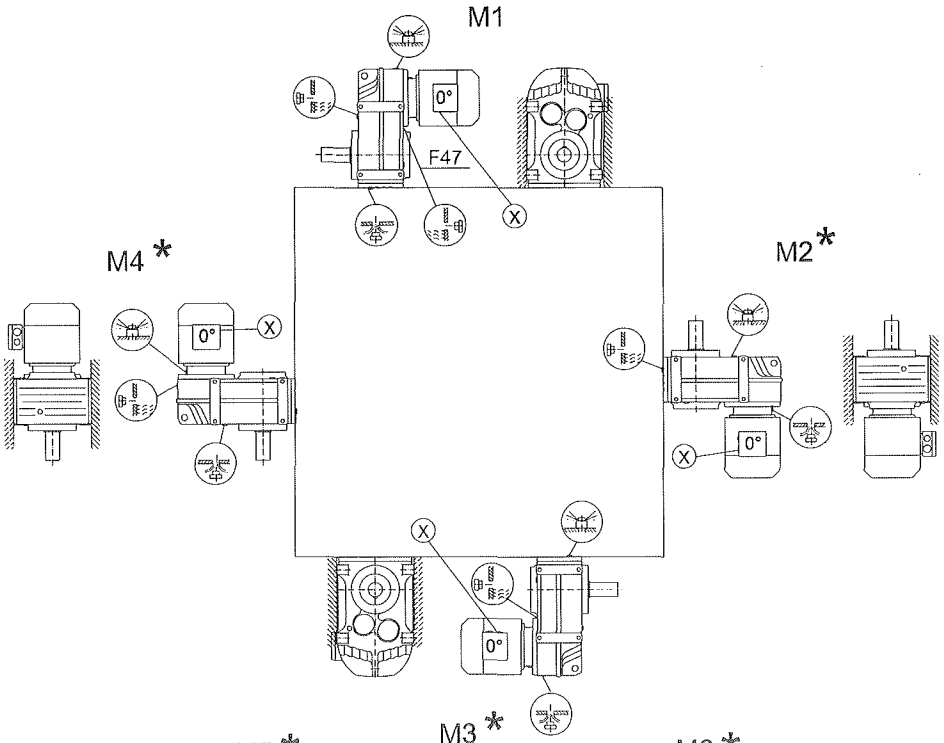

F..27 M1, M3, M5, M6

F..27 M1 - M6

F..27 M1, M3, M5, M6

* → page 51

FF/FAF/FHF/FAZ/FHZ27-157, FVF/FVZ27-107

42 043 200

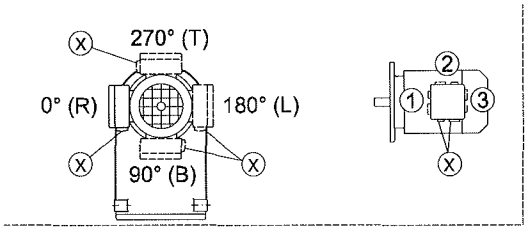

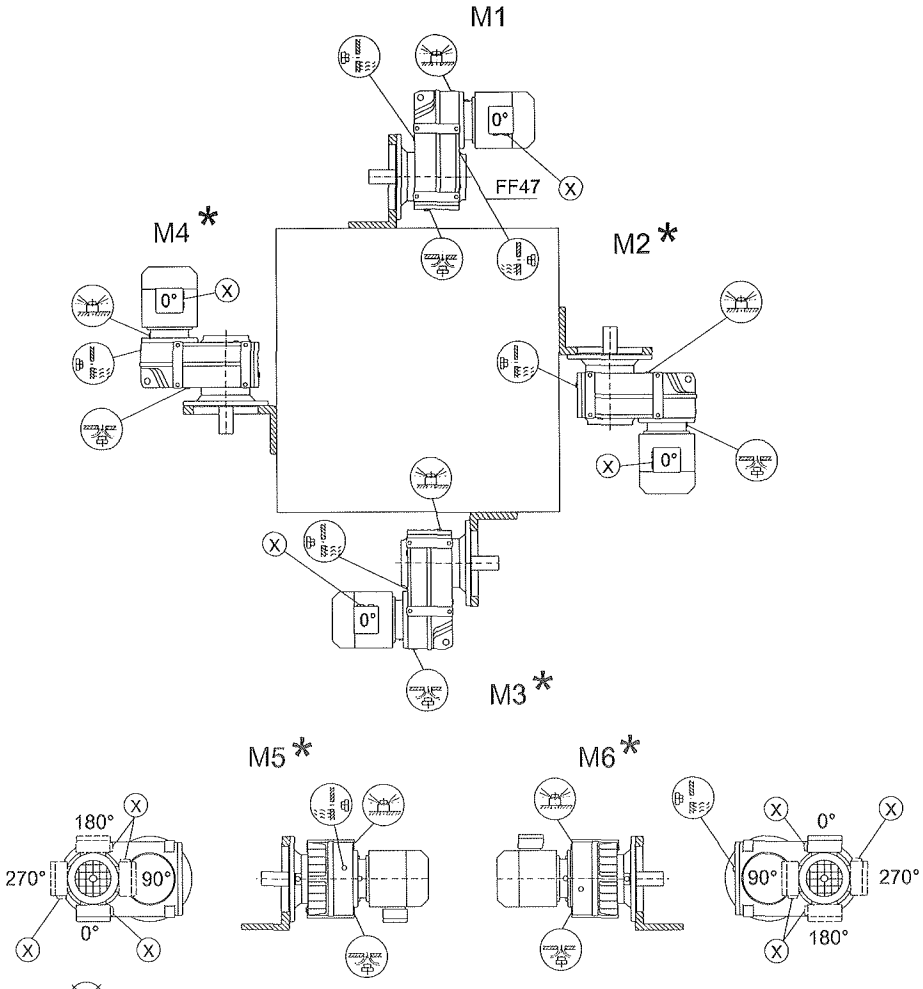

F..27 M1, M3, M5, M6

F..27 M1 - M6

F..27 M1, M3, M5, M6

* → page 51

FA/FH27-157, FV27-107, FT37-97

42 044 200

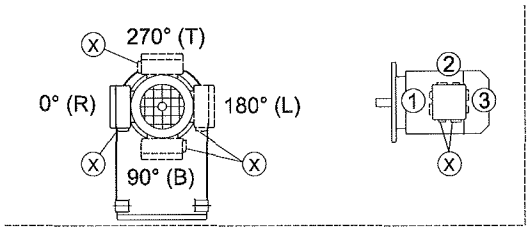

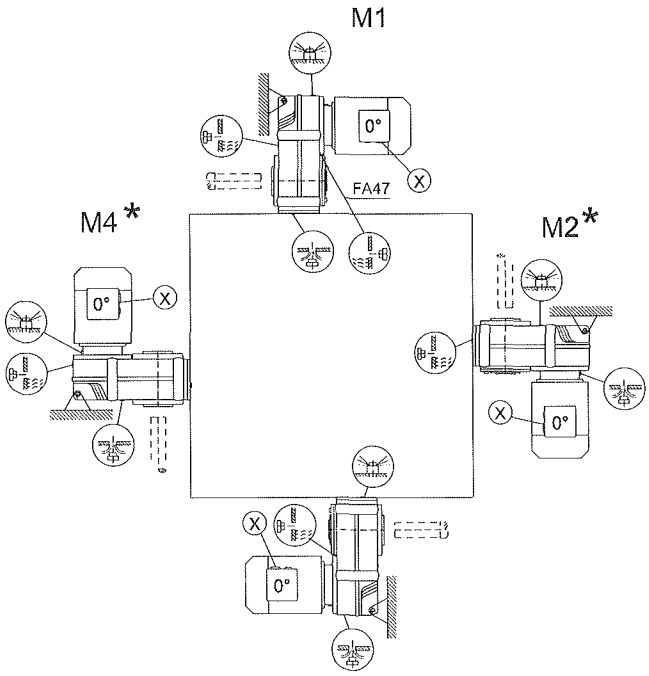

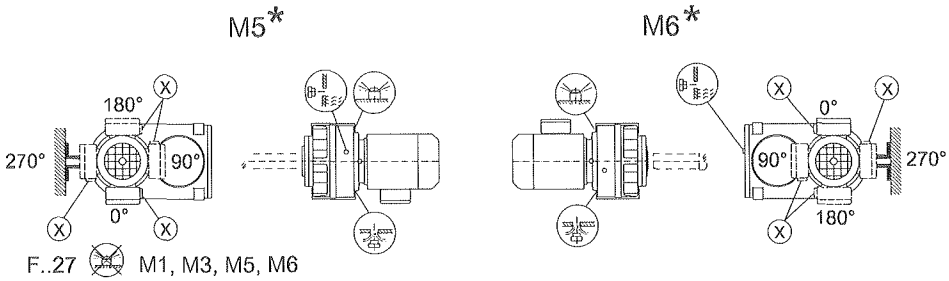

F..27 M1, M3, M5, M6

F..27 M1 - M6

F..27 M1, M3, M5, M6

* → page 51

8.6 Mounting positions for helical-bevel gearmotors

K/KA..B/KH37B-157B, KV37B-107B

34 025 200

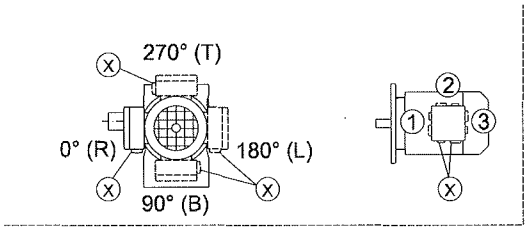

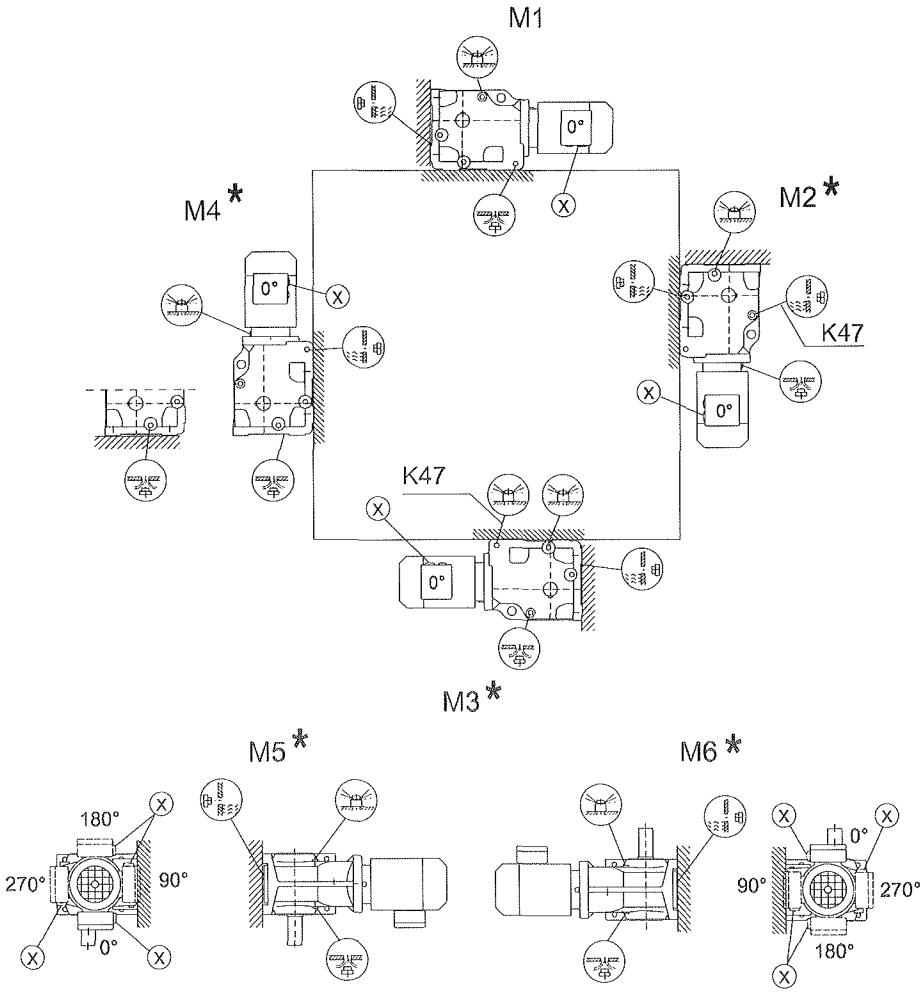

* → page 51

Important: See the (i) information in the "Gearmotors" catalog, section "Project Planning for Gear Units/Overhung and axial loads."

K167-187, KH167B-187B

34 026 200

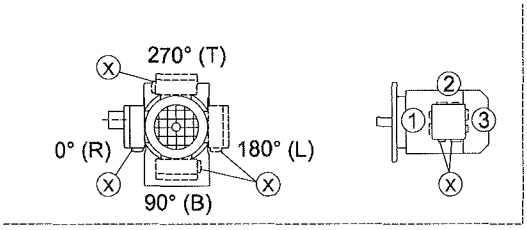

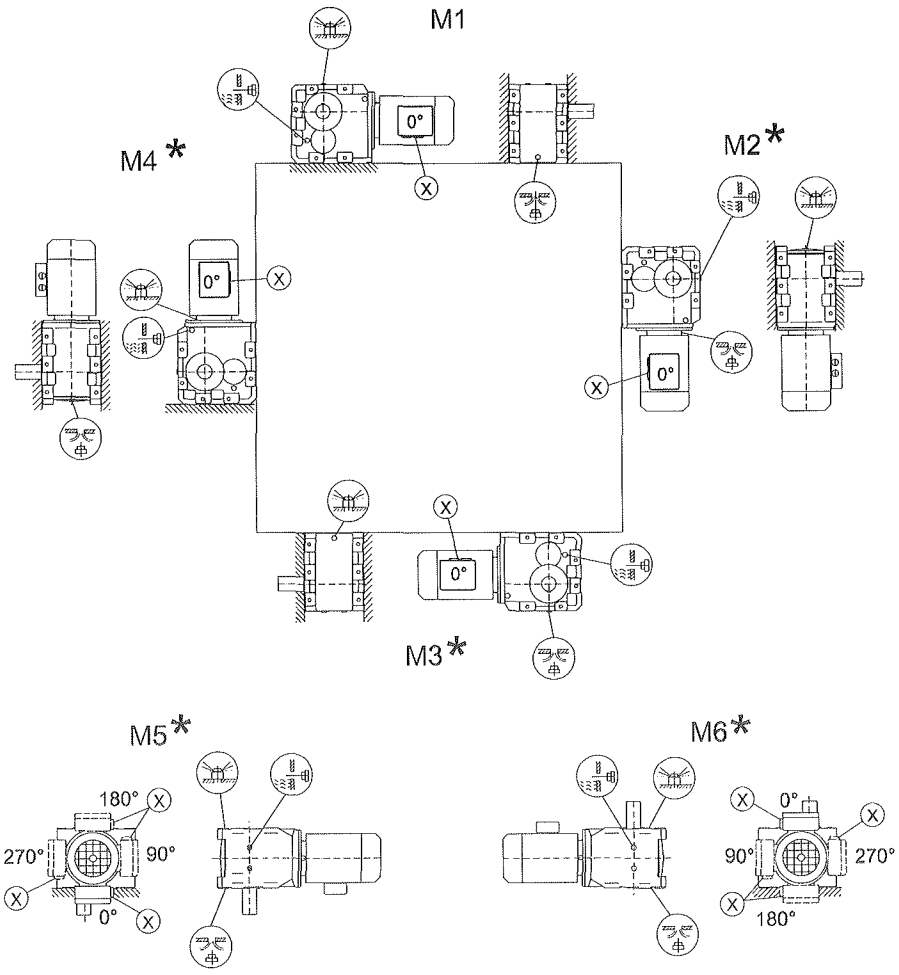

* → page 51

Important: See the ⓘ information in the "Gearmotors" catalog, section "Project Planning for Gear Units/Overhung and axial loads."

KF/KAF/KHF/KAZ/KHZ37-157, KVF/KVZ37-107

34 027 200

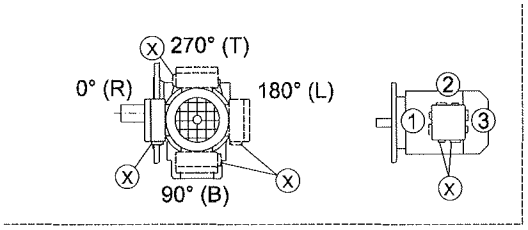

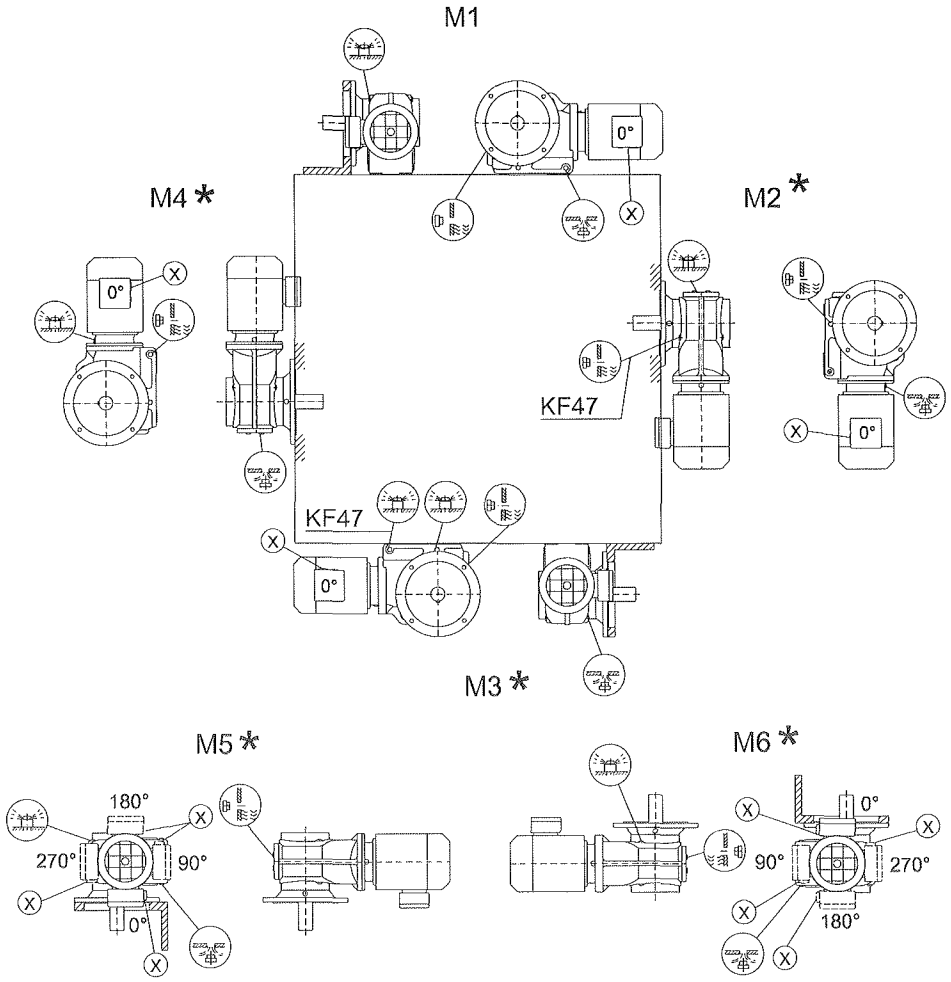

* → page 51

KA/KH37-157, KV37-107, KT37-97

39 025 200

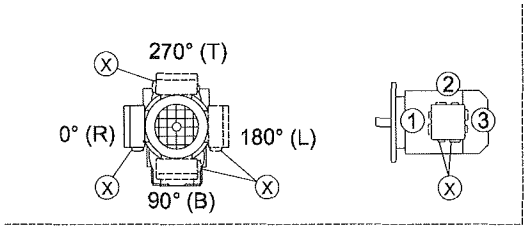

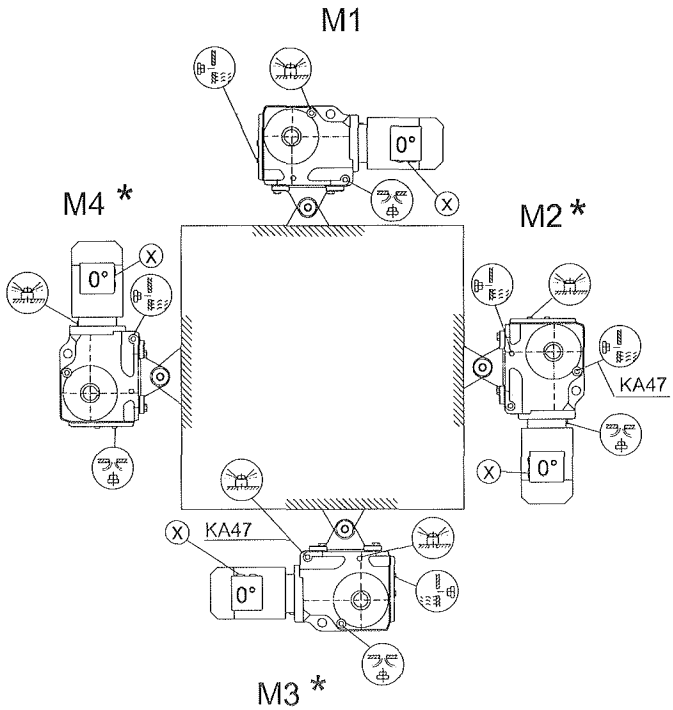

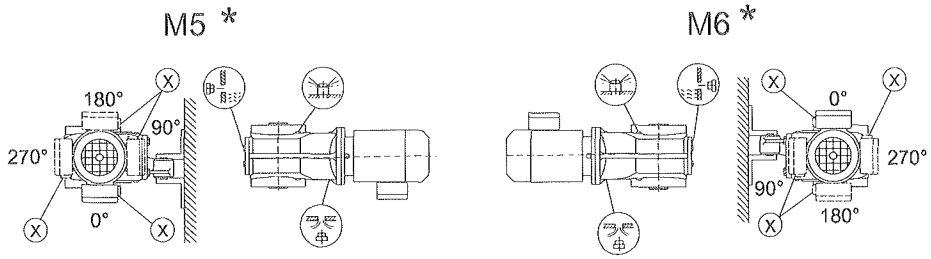

* → page 51

KH167-187

39 026 200

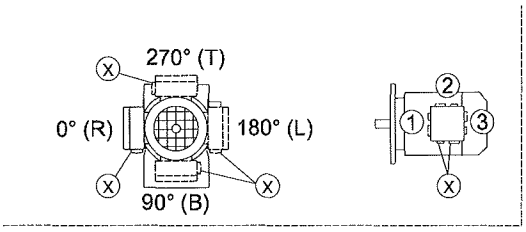

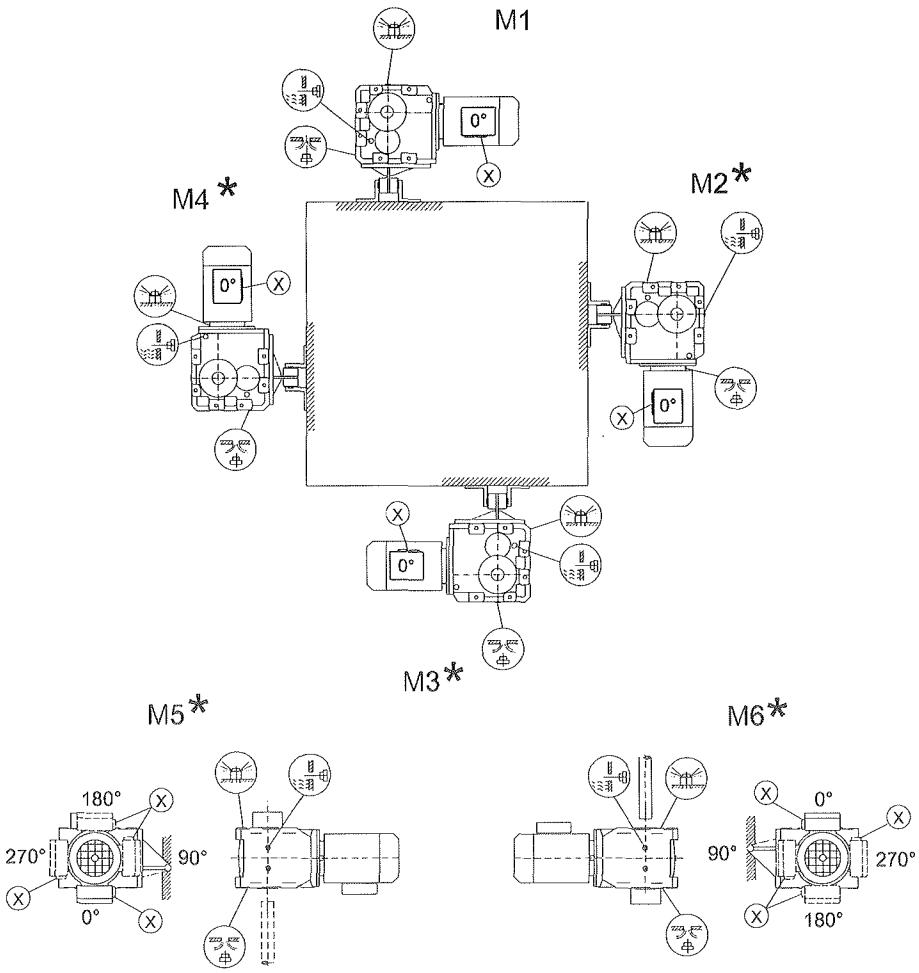

* → page 51

8.7 Mounting positions for helical-worm gearmotors

S37

05 025 200

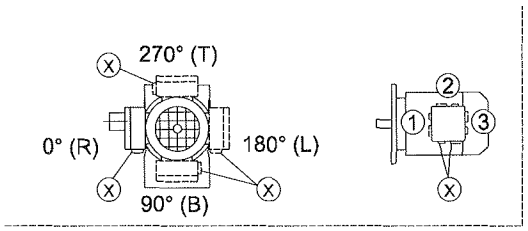

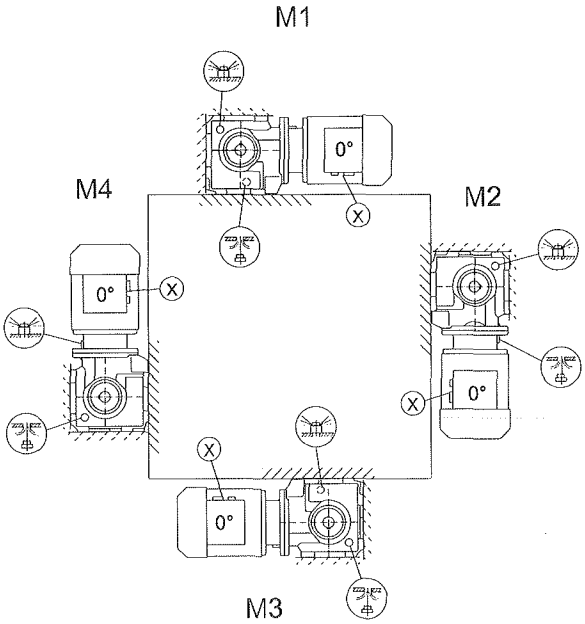

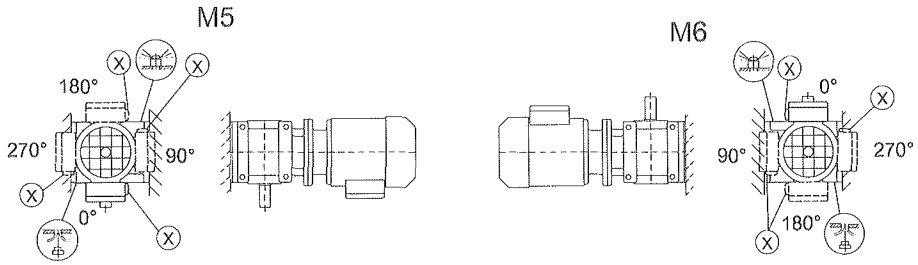

Important: See the (i) information in the "Gearmotors" catalog, section "Project Planning for Gear Units/Overhung and axial loads."

S47 - S97

05 026 200

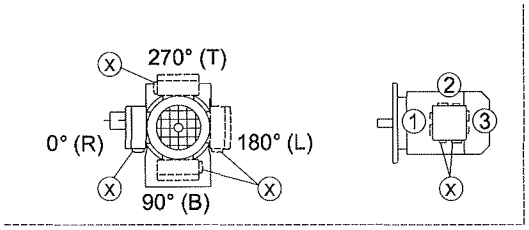

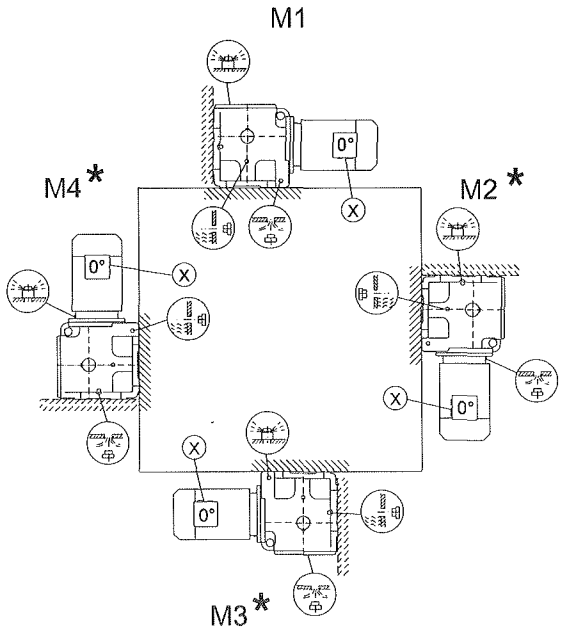

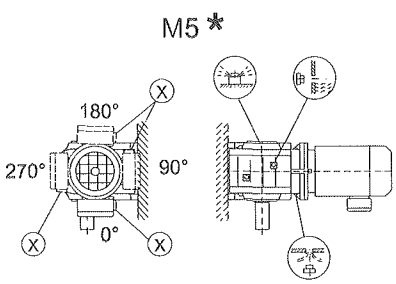

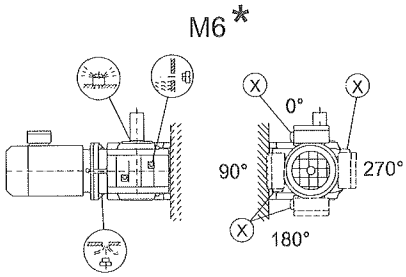

* → page 51

Important: See the (i) information in the "Gearmotors" catalog, section "Project Planning for Gear Units/Overhung and axial loads."

SF/SAF/SHF37

05 027 200

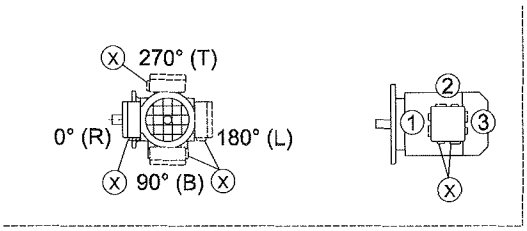

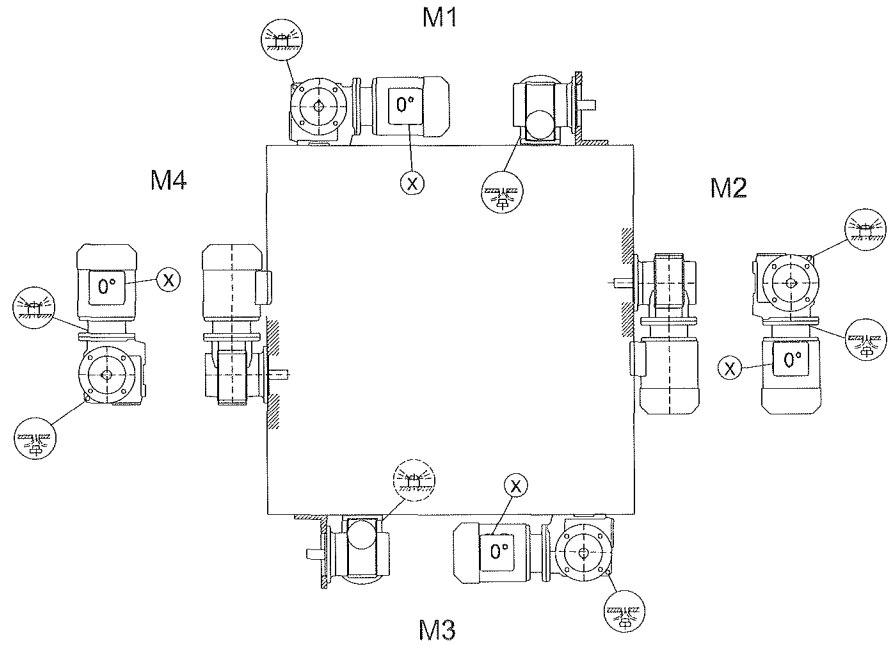

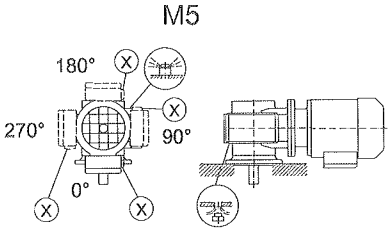

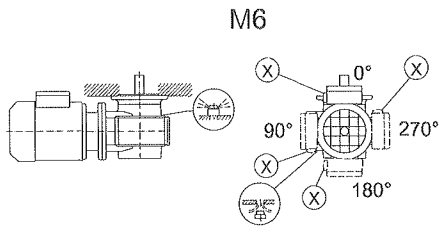

SF/SAF/SHF/SAZ/SHZ47-97

05 028 200

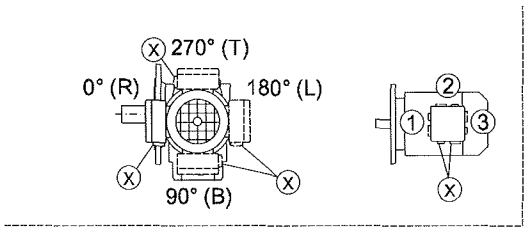

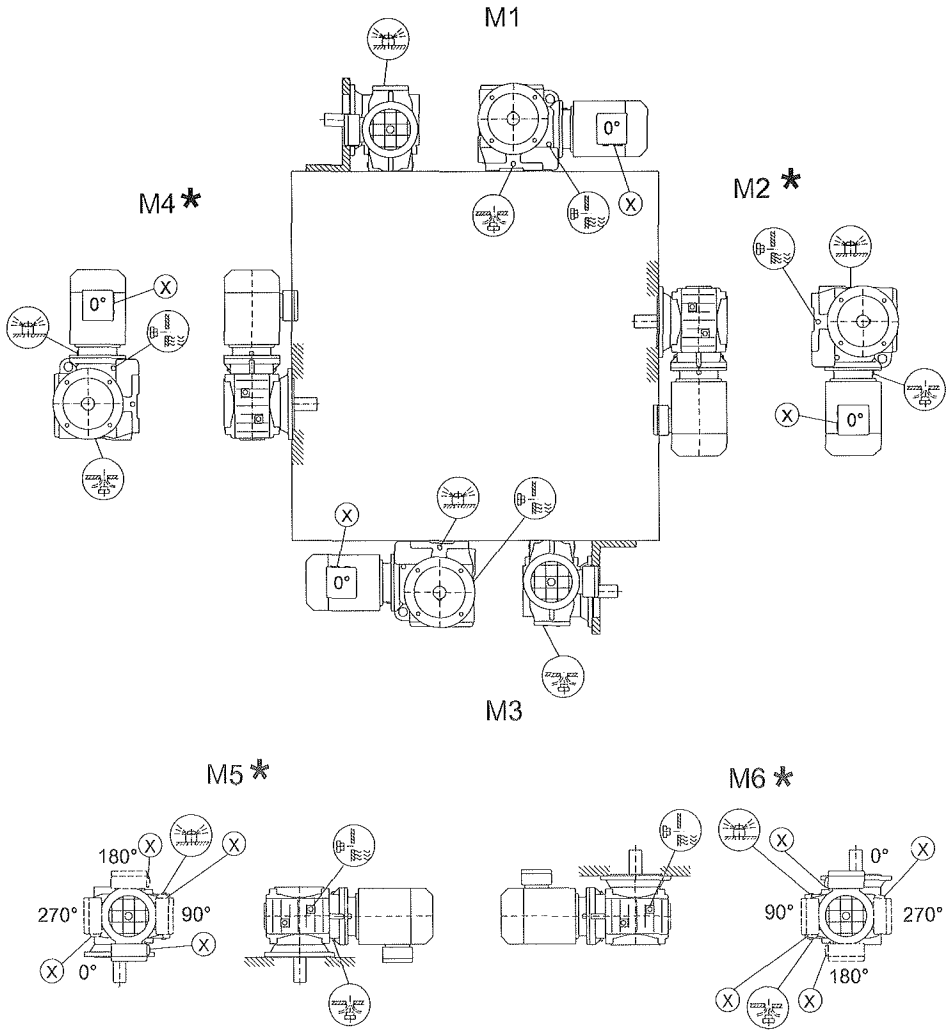

* → page 51

SA/SH/ST37

28 020 200

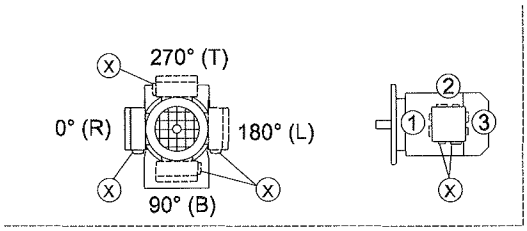

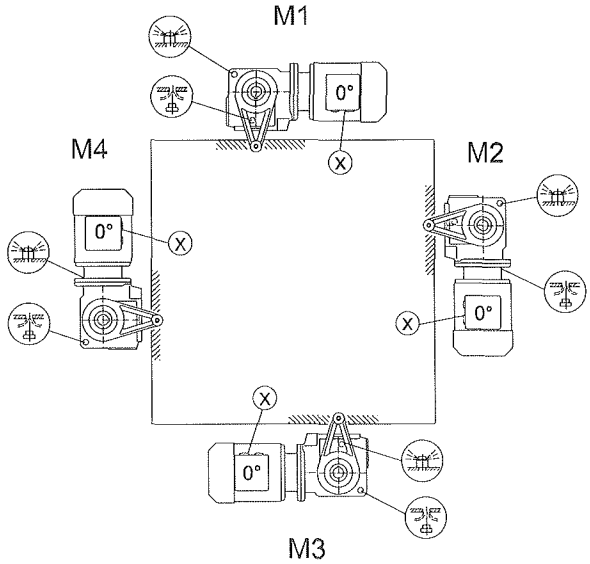

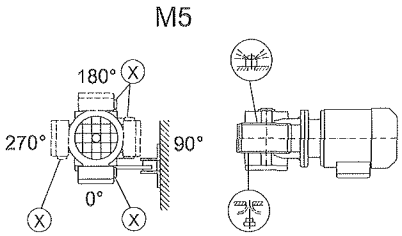

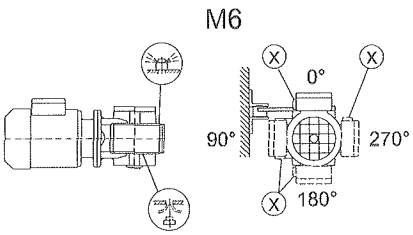

SA/SH/ST47-97

28 021 200

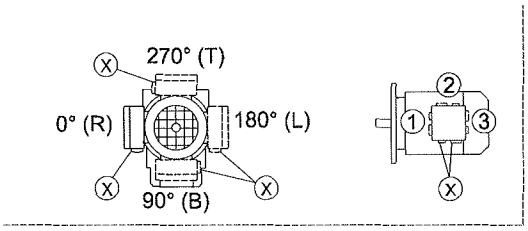

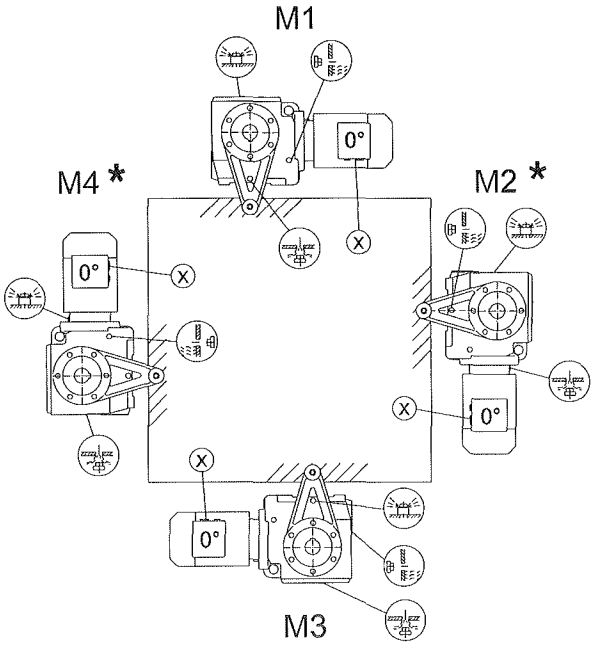

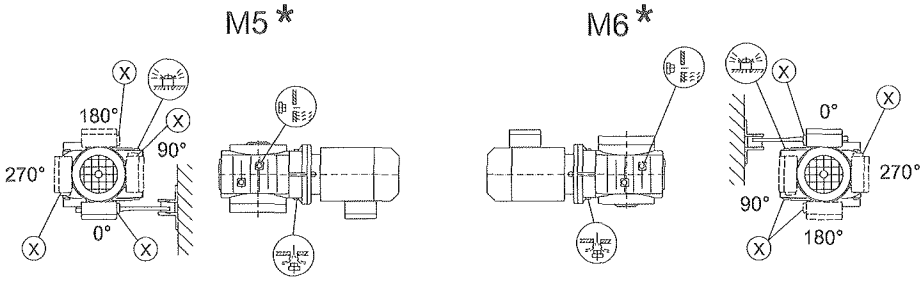

* → page 51

8.8 Mounting positions for SPIROPLAN® W gearmotors

W10-30

20 001 002

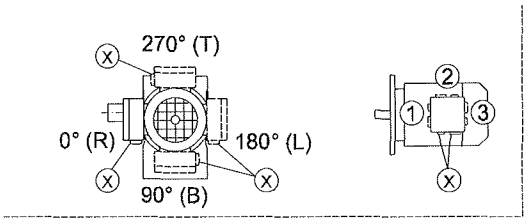

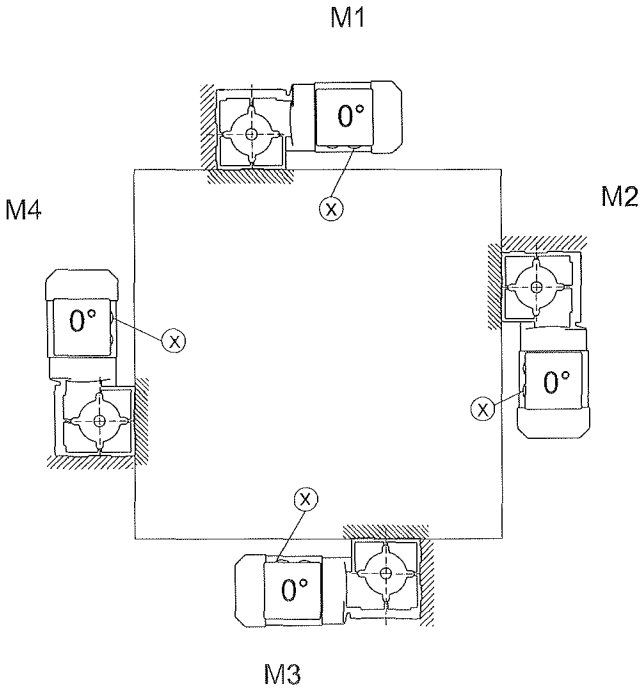

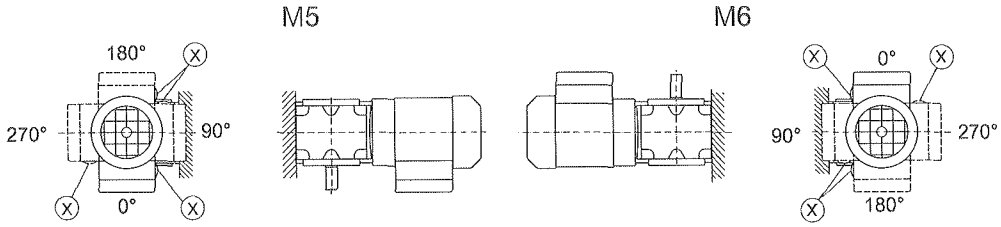

WF/WAF10-30

20 002 002

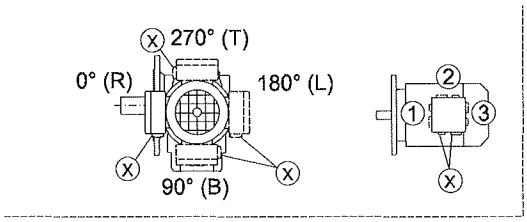

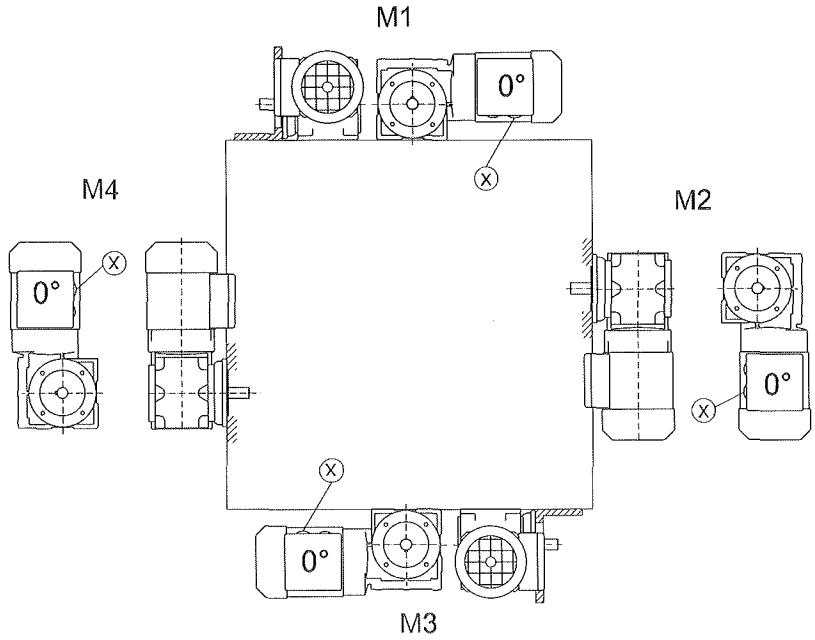

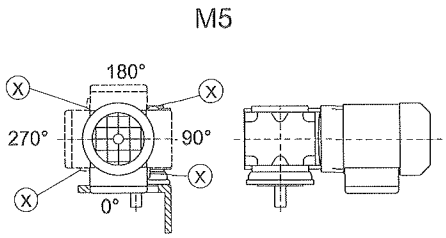

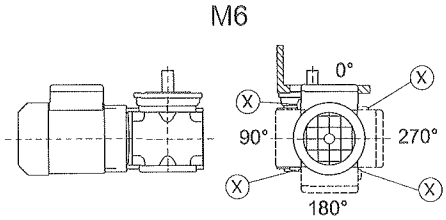

WA10-30

20 003 002

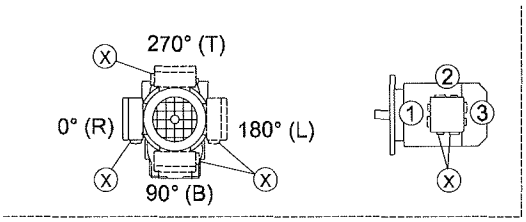

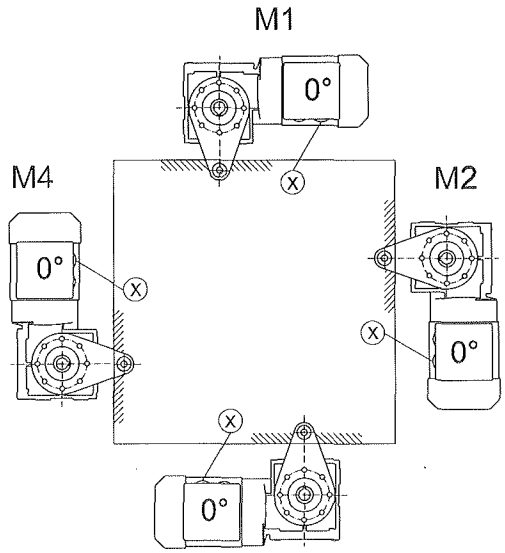

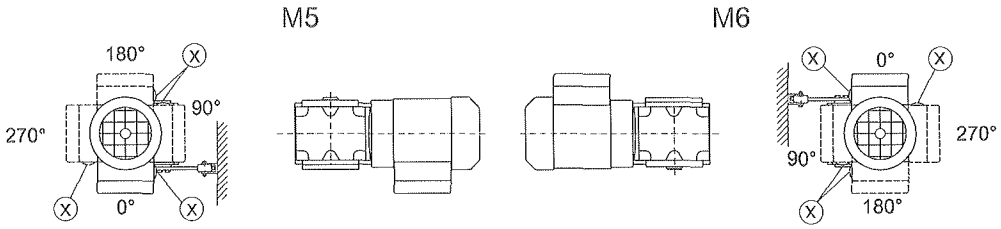

9 Lubricants

General information

Unless a special arrangement is made, SEW-EURODRIVE supplies the drives with a lubricant fill adapted for the specific gear unit and mounting position. The decisive factor is the mounting position (M1 ... M6, → Sec. "Mounting Positions and Important Order Information") specified when ordering the drive. You must adapt the lubricant fill to any subsequent changes made to the mounting position (→ Lubricant fill quantities).

9.1 Lubricant table

The lubricant table on the following page shows the permitted lubricants for SEW-EURODRIVE gear units. Please note the following key to the lubricant table.

Key to the lubricant table

Abbreviations used, meaning of shading and notes:

CLP	= Mineral oil
CLP PG	= Polyglycol (W gear units, conforms to USDA-H1)
CLP HC	= Synthetic hydrocarbons
E	= Ester oil (water pollution danger category WGK 1)
HCE	= Synthetic hydrocarbons + ester oil (USDA-H1 certification)
HLP	= Hydraulic oil
	= Synthetic lubricant (= synthetic anti-friction bearing grease)
	= Mineral lubricant (= mineral-based anti-friction bearing grease)
1)	Helical-worm gear units with PG oil: Please contact SEW
2)	Special lubricant for Spiroplan® gear units only
3)	Recommendation: Select SEW $f_B \geq 1.2$
4)	Pay attention to critical starting behavior at low temperatures!
5)	Low-viscosity grease
6)	Ambient temperature
	Lubricant for the food industry (food grade oil)
	Biodegradable oil (lubricant for use in agriculture, forestry and water resources)

Anti-friction bearing greases

The anti-friction bearings in gear units and motors are given a factory-fill with the greases listed below. SEW-EURODRIVE recommends regreasing anti-friction bearings with a grease fill at the same time as changing the oil.

	Ambient temperature	Manufacturer	Type
Anti-friction bearing in gear unit	-20 °C ... +60 °C	Mobil	Mobilux EP 2
	-40 °C ... +80 °C	Mobil	Mobiltemp SHC 100
Anti-friction bearing in motor	-20 °C ... +80 °C	Esso	Unirex EQ3
	-20 °C ... +60 °C	Shell	Alvania RL3
	+80 °C ... +100 °C	Klüber	Barrierta L55/2
	-45 °C ... -25 °C	Shell	Aero Shell Grease 16
Special greases for anti-friction bearings in gear units:			
	-30 °C ... +40 °C	Aral	Eural Grease EP 2
	-20 °C ... +40 °C	Aral	Aralube BAB EP2

The following grease quantities are required:

- For fast-running bearings (motor and gear unit input end): Fill the cavities between the rolling elements one third full with grease.
- For slow-running bearings (in gear units and at gear unit output end): Fill the cavities between the rolling elements two thirds full with grease.

Lubricant table

	6) °C -50 0 +50 +100	DIN (ISO)	ISO,NLGI	Mobil®	Shell			BP	Tribol			
R...	Standard -10 +40	CLP(CC)	VG 220	Mobilgear 630	Shell Omala 220	Klüberoil GEM 1-220	Aral Degol BG 220	BP Energol GR-XP 220	Tribol 1100/220	Meropa 220	Optigear BM 220	Renolin CLP 220
	-25 +80	CLP PG	VG 220	Mobil Glygoyle 30	Shell Tivela S 220	Klübersynth GH 6-220	Aral Degol GS 220	BP Enersyn SG-XP 220	Tribol 800/220	Synlube CLP 220	Optiflex A 220	
K...(HK...)	4) -40 +80	CLP HC	VG 220	Mobil SHC 630	Shell Omala HD 220	Klübersynth EG 4-220	Aral Degol PAS 220		Tribol 1510/220	Pinnacle EP 220	Optigear Synthetic A 220	Renolin Unisyn CLP 220
	4) -40 +40		VG 150	Mobil SHC 629	Shell Omala HD 150	Klübersynth EG 4-150				Pinnacle EP 150		
	-20 +25	CLP (CC)	VG 150 VG 100	Mobilgear 627	Shell Omala 100	Klüberoil GEM 1-150	Aral Degol BG 100	BP Energol GR-XP 100	Tribol 1100/100	Meropa 150	Optigear BM 100	Renolin CLP 150
F...	-30 +10	HLP (HM)	VG 68-46 VG 32	Mobil D.T.E. 13M	Shell Tellus T 32	Klüberoil GEM 1-68	Aral Degol BG 46		Tribol 1100/68	Rando EP Ashless 46	Optigear 32	Renolin B 46 HVI
	4) -40 +10	CLP HC	VG 32	Mobil SHC 624		Klüber-Summit HySyn FG-32				Cetus PAO 46		
	4) -40 -20	HLP (HM)	VG 22 VG 15	Mobil D.T.E. 11M	Shell Tellus T 15	Isoflex MT 30 ROT		BP Energol HLP-HM 15		Rando HDZ 15		
S...(HS...)	Standard 0 +40	CLP (CC)	VG 680	Mobilgear 636	Shell Omala 680	Klüberoil GEM 1-680	Aral Degol BG 680	BP Energol GR-XP 680	Tribol 1100/680	Meropa 680	Optigear BM 680	Renolin CLP 680
	-20 +60	CLP PG	VG 680 1)		Shell Tivela S 680	Klübersynth GH 6-680		BP Enersyn SG-XP 680	Tribol 800/680	Synlube CLP 680		
	4) -30 +80	CLP HC	VG 460	Mobil SHC 634	Shell Omala HD 460	Klübersynth EG 4-460				Pinnacle EP 460		
	4) -40 +10		VG 150	Mobil SHC 629	Shell Omala HD 150	Klübersynth EG 4-150				Pinnacle EP 150		
	-20 +10	CLP (CC)	VG 150 VG 100	Mobilgear 627	Shell Omala 100	Klüberoil GEM 1-150	Aral Degol BG 100	BP Energol GR-XP 100	Tribol 1100/100	Meropa 100	Optigear BM 100	Renolin CLP 150
	-25 +20	CLP PG	VG 220 1)	Mobil Glygoyle 30	Shell Tivela S 220	Klübersynth GH 6-220			Tribol 800/220	Synlube CLP 220	Optiflex A 220	
	4) -40 0	CLP HC	VG 32	Mobil SHC 624		Klüber-Summit HySyn FG-32				Cetus PAO 46		
R...,K...(HK...), F...,S...(HS...)	4) -30 +40	HCE	VG 460		Shell Cassida Fluid GL 460	Klüberoil 4UH1-460 N	Aral Eural Gear 460				Optileb GT 460	
	-20 +40	E	VG 460			Klüberbio CA2-460	Aral Degol BAB 460				Optisynt BS 460	
W...(HW...)	Standard -20 +40	SEW PG	VG 460 2)			Klüber SEW HT-460-5						
	4) -40 +10	API GL5	SAE 75W90 (~VG 100)	Mobilube SHC 75 W90-LS								
	-20 +40	CLP PG	VG 460 3)			Klübersynth UH1 6-460						
R32 R302	-25 +60	DIN 51 818 5)	00	Glygoyle Grease 00	Shell Tivela GL 00	Klübersynth GE 46-1200				Multifak 6833 EP 00		
	Standard -15 +40		000 - 0	Mobilux EP 004	Shell Alvania GL 00		Aralub MFL 00	BP Energrease LS-EP 00		Multifak EP 000	Longtime PD 00	Renolin SF 7 - 041

01 805 892

9.2 Lubricant fill quantities

The specified fill quantities are **recommended values**. The precise values vary depending on the number of stages and gear ratio. When filling, it is essential to check the **oil level plug since it indicates the precise oil capacity**.

The following tables show guide values for lubricant fill quantities in relation to the mounting position M1 ... M6.

Helical (R) gear units

Gear unit type R.., R..F	Fill quantity in liters					
	M1[1)]	M2[1)]	M3	M4	M5	M6
R07/R07F	0.12	0.20	0.20	0.20	0.20	0.20
R17/R17F	0.25	0.55	0.35	0.55	0.35	0.35
R27/R27F	0.25/0.40	0.70	0.50	0.70	0.50	0.50
R37/R37F	0.30/0.95	0.85	0.95	1.05	0.75	0.95
R47/R47F	0.70/1.50	1.60	1.50	1.65	1.50	1.50
R57/R57F	0.80/1.70	1.90	1.70	2.10	1.70	1.70
R67/R67F	1.10/2.30	2.60/3.50	2.80	3.20	1.80	2.00
R77/R77F	1.20/3.00	3.80/4.10	3.60	4.10	2.50	3.40
R87/R87F	2.30/6.0	6.7/8.2	7.2	7.7	6.3	6.5
R97	4.60/9.8	11.7/14.0	11.7	13.4	11.3	11.7
R107	6.0/13.7	16.3	16.9	19.2	13.2	15.9
R137	10.0/25.0	28.0	29.5	31.5	25.0	25.0
R147	15.4/40.0	46.5	48.0	52.0	39.5	41.0
R167	27.0/70.0	82.0	78.0	88.0	66.0	69.0
Gear unit type RF.. / RM..	**Fill quantity in liters**					
	M1[1)]	M2[1)]	M3	M4	M5	M6
RF07	0.12	0.20	0.20	0.20	0.20	0.20
RF17	0.25	0.55	0.35	0.55	0.35	0.35
RF27	0.25/0.40	0.70	0.50	0.70	0.50	0.50
RF37	0.35/0.95	0.90	0.95	1.05	0.75	0.95
RF47	0.65/1.50	1.60	1.50	1.65	1.50	1.50
RF/RM57	0.80/1.70	1.80	1.70	2.00	1.70	1.70
RF/RM67	1.20/2.50	2.70/3.60	2.70	2.60	1.90	2.10
RF/RM77	1.20/2.60	3.80/4.10	3.30	4.10	2.40	3.00
RF/RM87	2.40/6.0	6.8/7.9	7.1	7.7	6.3	6.4
RF/RM97	5.1/10.2	11.9/14.0	11.2	14.0	11.2	11.8
RF/RM107	6.3/14.9	15.9	17.0	19.2	13.1	15.9
RF/RM137	9.5/25.0	27.0	29.0	32.5	25.0	25.0
RF/RM147	16.4/42.0	47.0	48.0	52.0	42.0	42.0
RF/RM167	26.0/70.0	82.0	78.0	88.0	65.0	71.0

1) The output end gear unit of multi-stage gear units must be filled with the larger oil volume.

Helical (RX) gear units

Gear unit type RX..	Fill quantity in liters					
	M1	M2	M3	M4	M5	M6
RX57	0.60	0.80	1.30	1.30	0.90	0.90
RX67	0.80	0.80	1.70	1.90	1.10	1.10
RX77	1.10	1.50	2.60	2.70	1.60	1.60
RX87	1.70	2.50	4.80	4.80	2.90	2.90
RX97	2.10	3.40	7.4	7.0	4.80	4.80
RX107	3.90	5.6	11.6	11.9	7.7	7.7
Gear unit type RXF..	**Fill quantity in liters**					
	M1	**M2**	**M3**	**M4**	**M5**	**M6**
RXF57	0.50	0.80	1.10	1.10	0.70	0.70
RXF67	0.70	0.80	1.50	1.40	1.00	1.00
RXF77	0.90	1.30	2.40	2.00	1.60	1.60
RXF87	1.60	1.95	4.90	3.95	2.90	2.90
RXF97	2.10	3.70	7.1	6.3	4.80	4.80
RXF107	3.10	5.7	11.2	9.3	7.2	7.2

Parallel shaft helical (F) gear units

F.., FA..B, FH..B, FV..B:

Gear unit type	Fill quantity in liters					
	M1	M2	M3	M4	M5	M6
F..27	0.60	0.80	0.65	0.70	0.60	0.60
F..37	0.95	1.25	0.70	1.25	1.00	1.10
F..47	1.50	1.80	1.10	1.90	1.50	1.70
F..57	2.60	3.50	2.10	3.50	2.80	2.90
F..67	2.70	3.80	1.90	3.80	2.90	3.20
F..77	5.9	7.3	4.30	8.0	6.0	6.3
F..87	10.8	13.0	7.7	13.8	10.8	11.0
F..97	18.5	22.5	12.6	25.2	18.5	20.0
F..107	24.5	32.0	19.5	37.5	27.0	27.0
F..127	40.5	54.5	34.0	61.0	46.3	47.0
F..157	69.0	104.0	63.0	105.0	86.0	78.0

FF..:

Gear unit type	Fill quantity in liters					
	M1	M2	M3	M4	M5	M6
FF27	0.60	0.80	0.65	0.70	0.60	0.60
FF37	1.00	1.25	0.70	1.30	1.00	1.10
FF47	1.60	1.85	1.10	1.90	1.50	1.70
FF57	2.80	3.50	2.10	3.70	2.90	3.00
FF67	2.70	3.80	1.90	3.80	2.90	3.20
FF77	5.9	7.3	4.30	8.1	6.0	6.3
FF87	10.8	13.2	7.8	14.1	11.0	11.2
FF97	19.0	22.5	12.6	25.6	18.9	20.5
FF107	25.5	32.0	19.5	38.5	27.5	28.0
FF127	41.5	55.5	34.0	63.0	46.3	49.0
FF157	72.0	105.0	64.0	106.0	87.0	79.0

FA.., FH.., FV.., FAF.., FHF.., FVF.., FAZ.., FHZ.., FVZ..:

Gear unit type	Fill quantity in liters					
	M1	M2	M3	M4	M5	M6
F..27	0.60	0.80	0.65	0.70	0.60	0.60
F..37	0.95	1.25	0.70	1.25	1.00	1.10
F..47	1.50	1.80	1.10	1.90	1.50	1.70
F..57	2.70	3.50	2.10	3.40	2.90	3.00
F..67	2.70	3.80	1.90	3.80	2.90	3.20
F..77	5.9	7.3	4.30	8.0	6.0	6.3
F..87	10.8	13.0	7.7	13.8	10.8	11.0
F..97	18.5	22.5	12.6	25.2	18.5	20.0
F..107	24.5	32.0	19.5	37.5	27.0	27.0
F..127	39.0	54.5	34.0	61.0	45.0	46.5
F..157	68.0	103.0	62.0	104.0	85.0	77.0

Helical-bevel (K) gear units

K.., KA..B, KH..B, KV..B:

Gear unit type	Fill quantity in liters					
	M1	M2	M3	M4	M5	M6
K..37	0.50	1.00	1.00	1.25	0.95	0.95
K..47	0.80	1.30	1.50	2.00	1.60	1.60
K..57	1.20	2.30	2.50	2.80	2.60	2.40
K..67	1.10	2.40	2.60	3.45	2.60	2.60
K..77	2.20	4.10	4.40	5.8	4.20	4.40
K..87	3.70	8.0	8.7	10.9	8.0	8.0
K..97	7.0	14.0	15.7	20.0	15.7	15.5
K..107	10.0	21.0	25.5	33.5	24.0	24.0
K..127	21.0	41.5	44.0	54.0	40.0	41.0
K..157	31.0	62.0	65.0	90.0	58.0	62.0
K..167	33.0	95.0	105.0	123.0	85.0	84.0
K..187	53.0	152.0	167.0	200	143.0	143.0

KF..:

Gear unit type	Fill quantity in liters					
	M1	M2	M3	M4	M5	M6
KF37	0.50	1.10	1.10	1.50	1.00	1.00
KF47	0.80	1.30	1.70	2.20	1.60	1.60
KF57	1.30	2.30	2.70	3.15	2.90	2.70
KF67	1.10	2.40	2.80	3.70	2.70	2.70
KF77	2.10	4.10	4.40	5.9	4.50	4.50
KF87	3.70	8.2	9.0	11.9	8.4	8.4
KF97	7.0	14.7	17.3	21.5	15.7	16.5
KF107	10.0	21.8	25.8	35.1	25.2	25.2
KF127	21.0	41.5	46.0	55.0	41.0	41.0
KF157	31.0	66.0	69.0	92.0	62.0	62.0

KA.., KH.., KV.., KAF.., KHF.., KVF.., KAZ.., KHZ.., KVZ..:

Gear unit type	Fill quantity in liters					
	M1	M2	M3	M4	M5	M6
K..37	0.50	1.00	1.00	1.40	1.00	1.00
K..47	0.80	1.30	1.60	2.15	1.60	1.60
K..57	1.30	2.30	2.70	3.15	2.90	2.70
K..67	1.10	2.40	2.70	3.70	2.60	2.60
K..77	2.10	4.10	4.60	5.9	4.40	4.40
K..87	3.70	8.2	8.8	11.1	8.0	8.0
K..97	7.0	14.7	15.7	20.0	15.7	15.7
K..107	10.0	20.5	24.0	32.4	24.0	24.0
K..127	21.0	41.5	43.0	52.0	40.0	40.0
K..157	31.0	66.0	67.0	87.0	62.0	62.0
KH167	33.0	95.0	105.0	123.0	85.0	84.0
KH187	53.0	152.0	167.0	200	143.0	143.0

Spiroplan® (W) gear units

The fill quantity of Spiroplan® gear units does not vary, irrespective of their mounting position:

Gear unit type	Fill quantity in liters, regardless of mounting position
W..10	0.16
W..20	0.26
W..30	0.50

Helical-worm (S) gear units

S..:

Gear unit type	Fill quantity in liters					
	M1	M2	M3[1)]	M4	M5	M6
S37	0.25	0.40	0.50	0.55	0.40	0.40
S47	0.35	0.80	0.70/0.90	1.00	0.80	0.80
S57	.50	1.20	1.00/1.20	1.45	1.30	1.30
S67	1.00	2.00	2.20/3.10	3.10	2.60	2.60
S77	1.90	4.20	3.70/5.4	5.9	4.40	4.40
S87	3.30	8.1	6.9/10.4	11.3	8.4	8.4
S97	6.8	15.0	13.4/18.0	21.8	17.0	17.0

1) The larger gear unit of multi-stage gear units must be filled with the larger oil volume.

SF..:

Gear unit type	Fill quantity in liters					
	M1	M2	M3[1)]	M4	M5	M6
SF37	0.25	0.40	0.50	0.55	0.40	0.40
SF47	0.40	0.90	0.90/1.05	1.05	1.00	1.00
SF57	0.50	1.20	1.00/1.50	1.55	1.40	1.40
SF67	1.00	2.20	2.30/3.00	3.20	2.70	2.70
SF77	1.90	4.10	3.90/5.8	6.5	4.90	4.90
SF87	3.80	8.0	7.1/10.1	12.0	9.1	9.1
SF97	7.4	15.0	13.8/18.8	22.6	18.0	18.0

1) The larger gear unit of multi-stage gear units must be filled with the larger oil volume.

SA.., SH.., SAF.., SHF.., SAZ.., SHZ..:

Gear unit type	Fill quantity in liters					
	M1	M2	M3[1)]	M4	M5	M6
S..37	0.25	0.40	0.50	0.50	0.40	0.40
S..47	0.40	0.80	0.70/0.90	1.00	0.80	0.80
S..57	0.50	1.10	1.00/1.50	1.50	1.20	1.20
S..67	1.00	2.00	1.80/2.60	2.90	2.50	2.50
S..77	1.80	3.90	3.60/5.0	5.8	4.50	4.50
S..87	3.80	7.4	6.0/8.7	10.8	8.0	8.0
S..97	7.0	14.0	11.4/16.0	20.5	15.7	15.7

1) The larger gear unit of multi-stage gear units must be filled with the larger oil volume.

10 Appendix

10.1 Index of changes

The following additions and changes have been made compared to the previous edition of the "Explosion-Proof Gear Units R..7, F..7, K..7, S..7, SPIROPLAN® W" (publication number: 1055520x, edition 11/2002) operating instructions:

General additions and corrections.

Mechanical installation

- Installing the gear unit: Data on flatness error
- Installing torque arms for mounted gear units: Data on retaining bolts
- Mounted gear units with shrink disks: Information on assembly / removal has been added
- Mounted gear units with TorqLOC®
- AM adapter coupling: Point A

Inspection and maintenance

- Lubricant change intervals

11 Index

A

AD inspection / maintenance 47
AD, mounting on the input shaft assembly 40
Adapter coupling 36
Adjusting the mounting position 17
AM with backstop 38
Anti-friction bearing greases 75
AQ, installing the coupling adapter 38
AQA, maintenance / inspection 47

B

Backstop RS 38
Breather valve 18

C

Centering shoulder AD../ZR 41
Change the oil seal 47
Check oil 46
Check oil level 46
Churning losses 51
Couplings, installation 20
Cover with backstop AD../RS 43
Cover with motor mounting platform AD../P 40
Customer service 48

D

Damp locations 17
Designated use 6

E

Extended storage 7

F

F gear units, lubricant fill quantities 78
Flatness error 16

G

Gear unit inspection 46
Gear unit maintenance 46
Gear unit structure 9
Gear unit venting 18

H

Helical gear units, lubricant fill quantities 77, 78
helical gear units, structure 9
Helical-bevel gear units, lubricant fill quantities 79
Helical-bevel gear units, structure 11
Helical-worm gear unit, structure 12
Helical-worm gear units, lubricant fill quantities 80

I

IEC adapter 36
Input and output elements, installation 19
Inspection intervals 45
Inspection of AD adapter 47
Inspection of AM / AQA adapters 47
Installation tolerances 15
Installing couplings 20
Installing input and output elements 19
Installing the AM coupling adapter 36
Installing the AQ coupling adapter 38
Installing the gear unit 16

K

K gear units, lubricant fill quantities 79
Keyway 23

L

Lubricant change intervals 45
Lubricant fill quantities 77
Lubricant fill quantities for helical gear units 77, 78
Lubricant fill quantities for helical-bevel gear units 79
Lubricant fill quantities for helical-worm gear units 80
Lubricant fill quantities for parallel shaft helical gear units 78
Lubricant fill quantities for Spiroplan® gear units 80
Lubricant table 74, 76
Lubricants 74

M

Maintenance / inspection 47
Maintenance intervals 45
Maintenance of AD adapter 47
Maintenance of AM / AQA adapters 47
Malfunctions 48
- *AD input shaft assembly* 49
- *AM / AQA / AL adapters* 48
- *Gear units* 48

Mechanical installation 15
Motor mounting platform 40
Mounted gear units 23, 27, 30
Mounting on the input shaft assembly AD 40
Mounting position designation 50
Mounting positions
- *Helical gear units* 52, 55
- *Helical-bevel gear units* 60
- *Helical-worm gear units* 65
- *Parallel shaft helical gear units* 57
- *Spiroplan® gear units* 71

Mounting torque arms 21

N

Nameplate 14
NEMA adapter 36

O

Oil change 46
Open air 17

P

Painting gear units 18
Parallel shaft helical gear unit, structure 10
Parallel shaft helical gear units, lubricant fill quantities 78

R

R gear units, lubricant fill quantities 77
RS backstop 43
RX gear units, lubricant fill quantities 78

S

S gear units, lubricant fill quantities 80
Safety notes 6
Serial number 14
Shrink disk 27
Solid shaft 19
Spiroplan® gear units, lubricant fill quantities 80
Spiroplan® W gear units, structure 13
Splined hollow shaft 23
Startup 44
- *Helical, parallel shaft helical and helical-bevel gear units* 44
- *Helical-worm and Spiroplan® W gear units* 44

Structure
- *Helical gear units* 9
- *Helical-bevel gear units* 11
- *Helical-worm gear unit* 12
- *Parallel shaft helical gear unit* 10
- *Spiroplan® gear units* 13

T

TorqLOC® 30
Torque arm for helical-bevel gear units 21
Torque arm for helical-worm gear units 22
Torque arm for Spiroplan® W gear units 22
Torque arms for parallel shaft helical gear units 21
Torque arms, mounting 21
Transportation 7

U

Unit designation 14

W

W gear units, lubricant fill quantities 80
Waste disposal 5

Address List

Germany			
Headquarters **Production** **Sales**	**Bruchsal**	SEW-EURODRIVE GmbH & Co KG Ernst-Blickle-Straße 42 D-76646 Bruchsal P.O. Box Postfach 3023 · D-76642 Bruchsal	Tel. +49 7251 75-0 Fax +49 7251 75-1970 http://www.sew-eurodrive.de sew@sew-eurodrive.de
Service **Competence Center**	**Central** Gear units / Motors	SEW-EURODRIVE GmbH & Co KG Ernst-Blickle-Straße 1 D-76676 Graben-Neudorf	Tel. +49 7251 75-1710 Fax +49 7251 75-1711 sc-mitte-gm@sew-eurodrive.de
	Central Electronics	SEW-EURODRIVE GmbH & Co KG Ernst-Blickle-Straße 42 D-76646 Bruchsal	Tel. +49 7251 75-1780 Fax +49 7251 75-1769 sc-mitte-e@sew-eurodrive.de
	North	SEW-EURODRIVE GmbH & Co KG Alte Ricklinger Straße 40-42 D-30823 Garbsen (near Hannover)	Tel. +49 5137 8798-30 Fax +49 5137 8798-55 sc-nord@sew-eurodrive.de
	East	SEW-EURODRIVE GmbH & Co KG Dänkritzer Weg 1 D-08393 Meerane (near Zwickau)	Tel. +49 3764 7606-0 Fax +49 3764 7606-30 sc-ost@sew-eurodrive.de
	South	SEW-EURODRIVE GmbH & Co KG Domagkstraße 5 D-85551 Kirchheim (near München)	Tel. +49 89 909552-10 Fax +49 89 909552-50 sc-sued@sew-eurodrive.de
	West	SEW-EURODRIVE GmbH & Co KG Siemensstraße 1 D-40764 Langenfeld (near Düsseldorf)	Tel. +49 2173 8507-30 Fax +49 2173 8507-55 sc-west@sew-eurodrive.de
	Drive Service Hotline / 24 Hour Service		+49 180 5 SEWHELP +49 180 5 7394357
	Additional addresses for service in Germany provided on request!		

France			
Production **Sales** **Service**	**Haguenau**	SEW-USOCOME 48-54, route de Soufflenheim B. P. 20185 F-67506 Haguenau Cedex	Tel. +33 3 88 73 67 00 Fax +33 3 88 73 66 00 http://www.usocome.com sew@usocome.com
Assembly **Sales** **Service**	**Bordeaux**	SEW-USOCOME Parc d'activités de Magellan 62, avenue de Magellan - B. P. 182 F-33607 Pessac Cedex	Tel. +33 5 57 26 39 00 Fax +33 5 57 26 39 09
	Lyon	SEW-USOCOME Parc d'Affaires Roosevelt Rue Jacques Tati F-69120 Vaulx en Velin	Tel. +33 4 72 15 37 00 Fax +33 4 72 15 37 15
	Paris	SEW-USOCOME Zone industrielle 2, rue Denis Papin F-77390 Verneuil l'Etang	Tel. +33 1 64 42 40 80 Fax +33 1 64 42 40 88
	Additional addresses for service in France provided on request!		

Algeria			
Sales	**Alger**	Réducom 16, rue des Frères Zaghnoun Bellevue El-Harrach 16200 Alger	Tel. +213 21 8222-84 Fax +213 21 8222-84

Argentina			
Assembly **Sales** **Service**	**Buenos Aires**	SEW EURODRIVE ARGENTINA S.A. Centro Industrial Garin, Lote 35 Ruta Panamericana Km 37,5 1619 Garin	Tel. +54 3327 4572-84 Fax +54 3327 4572-21 sewar@sew-eurodrive.com.ar

Australia			
Assembly **Sales** **Service**	**Melbourne**	SEW-EURODRIVE PTY. LTD. 27 Beverage Drive Tullamarine, Victoria 3043	Tel. +61 3 9933-1000 Fax +61 3 9933-1003 http://www.sew-eurodrive.com.au enquires@sew-eurodrive.com.au
	Sydney	SEW-EURODRIVE PTY. LTD. 9, Sleigh Place, Wetherill Park New South Wales, 2164	Tel. +61 2 9725-9900 Fax +61 2 9725-9905 enquires@sew-eurodrive.com.au

Austria			
Assembly **Sales** **Service**	**Wien**	SEW-EURODRIVE Ges.m.b.H. Richard-Strauss-Strasse 24 A-1230 Wien	Tel. +43 1 617 55 00-0 Fax +43 1 617 55 00-30 http://sew-eurodrive.at sew@sew-eurodrive.at

Belgium			
Assembly **Sales** **Service**	**Brüssel**	CARON-VECTOR S.A. Avenue Eiffel 5 B-1300 Wavre	Tel. +32 10 231-311 Fax +32 10 231-336 http://www.caron-vector.be info@caron-vector.be

Brazil			
Production **Sales** **Service**	**Sao Paulo**	SEW-EURODRIVE Brasil Ltda. Avenida Amâncio Gaiolli, 50 Caixa Postal: 201-07111-970 Guarulhos/SP - Cep.: 07251-250	Tel. +55 11 6489-9133 Fax +55 11 6480-3328 http://www.sew.com.br sew@sew.com.br
	Additional addresses for service in Brazil provided on request!		

Bulgaria			
Sales	**Sofia**	BEVER-DRIVE GMBH Bogdanovetz Str.1 BG-1606 Sofia	Tel. +359 2 9532565 Fax +359 2 9549345 bever@mbox.infotel.bg

Cameroon			
Sales	**Douala**	Electro-Services Rue Drouot Akwa B.P. 2024 Douala	Tel. +237 4322-99 Fax +237 4277-03

Canada			
Assembly **Sales** **Service**	**Toronto**	SEW-EURODRIVE CO. OF CANADA LTD. 210 Walker Drive Bramalea, Ontario L6T3W1	Tel. +1 905 791-1553 Fax +1 905 791-2999 http://www.sew-eurodrive.ca l.reynolds@sew-eurodrive.ca
	Vancouver	SEW-EURODRIVE CO. OF CANADA LTD. 7188 Honeyman Street Delta. B.C. V4G 1 E2	Tel. +1 604 946-5535 Fax +1 604 946-2513 b.wake@sew-eurodrive.ca
	Montreal	SEW-EURODRIVE CO. OF CANADA LTD. 2555 Rue Leger Street LaSalle, Quebec H8N 2V9	Tel. +1 514 367-1124 Fax +1 514 367-3677 a.peluso@sew-eurodrive.ca
	Additional addresses for service in Canada provided on request!		

Chile			
Assembly **Sales** **Service**	**Santiago de Chile**	SEW-EURODRIVE CHILE LTDA. Las Encinas 1295 Parque Industrial Valle Grande LAMPA RCH-Santiago de Chile P.O. Box Casilla 23 Correo Quilicura - Santiago - Chile	Tel. +56 2 75770-00 Fax +56 2 75770-01 sewsales@entelchile.net

China			
Production **Assembly** **Sales** **Service**	**Tianjin**	SEW-EURODRIVE (Tianjin) Co., Ltd. No. 46, 7th Avenue, TEDA Tianjin 300457	Tel. +86 22 25322612 Fax +86 22 25322611 victor.zhang@sew-eurodrive.cn http://www.sew.com.cn

China			
Assembly **Sales** **Service**	**Suzhou**	SEW-EURODRIVE (Suzhou) Co., Ltd. 333, Suhong Middle Road Suzhou Industrial Park Jiangsu Province, 215021 P. R. China	Tel. +86 512 62581781 Fax +86 512 62581783 suzhou@sew.com.cn

Colombia			
Assembly **Sales** **Service**	**Bogotá**	SEW-EURODRIVE COLOMBIA LTDA. Calle 22 No. 132-60 Bodega 6, Manzana B Santafé de Bogotá	Tel. +57 1 54750-50 Fax +57 1 54750-44 sewcol@andinet.com

Croatia			
Sales **Service**	**Zagreb**	KOMPEKS d. o. o. PIT Erdödy 4 II HR 10 000 Zagreb	Tel. +385 1 4613-158 Fax +385 1 4613-158 kompeks@net.hr

Czech Republic			
Sales	**Praha**	SEW-EURODRIVE CZ S.R.O. Business Centrum Praha Luná 591 CZ-16000 Praha 6 - Vokovice	Tel. +420 220121234 + 220121236 Fax +420 220121237 http://www.sew-eurodrive.cz sew@sew-eurodrive.cz

Denmark			
Assembly **Sales** **Service**	**Kopenhagen**	SEW-EURODRIVEA/S Geminivej 28-30, P.O. Box 100 DK-2670 Greve	Tel. +45 43 9585-00 Fax +45 43 9585-09 http://www.sew-eurodrive.dk sew@sew-eurodrive.dk

Estonia			
Sales	**Tallin**	ALAS-KUUL AS Paldiski mnt.125 EE 0006 Tallin	Tel. +372 6593230 Fax +372 6593231 veiko.soots@alas-kuul.ee

Finland			
Assembly **Sales** **Service**	**Lahti**	SEW-EURODRIVE OY Vesimäentie 4 FIN-15860 Hollola 2	Tel. +358 3 589-300 Fax +358 3 7806-211 http://www.sew-eurodrive.fi sew@sew-eurodrive.fi

Gabon			
Sales	**Libreville**	Electro-Services B.P. 1889 Libreville	Tel. +241 7340-11 Fax +241 7340-12

Great Britain			
Assembly **Sales** **Service**	**Normanton**	SEW-EURODRIVE Ltd. Beckbridge Industrial Estate P.O. Box No.1 GB-Normanton, West- Yorkshire WF6 1QR	Tel. +44 1924 893-855 Fax +44 1924 893-702 http://www.sew-eurodrive.co.uk info@sew-eurodrive.co.uk

Greece			
Sales **Service**	**Athen**	Christ. Boznos & Son S.A. 12, Mavromichali Street P.O. Box 80136, GR-18545 Piraeus	Tel. +30 2 1042 251-34 Fax +30 2 1042 251-59 http://www.boznos.gr info@boznos.gr

Hong Kong			
Assembly **Sales** **Service**	**Hong Kong**	SEW-EURODRIVE LTD. Unit No. 801-806, 8th Floor Hong Leong Industrial Complex No. 4, Wang Kwong Road Kowloon, Hong Kong	Tel. +852 2 7960477 + 79604654 Fax +852 2 7959129 sew@sewhk.com

Hungary			
Sales **Service**	**Budapest**	SEW-EURODRIVE Kft. H-1037 Budapest Kunigunda u. 18	Tel. +36 1 437 06-58 Fax +36 1 437 06-50 office@sew-eurodrive.hu

India			
Assembly **Sales** **Service**	**Baroda**	SEW-EURODRIVE India Pvt. Ltd. Plot No. 4, Gidc Por Ramangamdi · Baroda - 391 243 Gujarat	Tel. +91 265 2831021 Fax +91 265 2831087 mdoffice@seweurodriveindia.com
Technical Offices	**Bangalore**	SEW-EURODRIVE India Private Limited 308, Prestige Centre Point 7, Edward Road Bangalore	Tel. +91 80 22266565 Fax +91 80 22266569 sewbangalore@sify.com
	Mumbai	SEW-EURODRIVE India Private Limited 312 A, 3rd Floor, Acme Plaza Andheri Kurla Road, Andheri (E) Mumbai	Tel. +91 22 28348440 Fax +91 22 28217858 sewmumbai@vsnl.net

Ireland			
Sales **Service**	**Dublin**	Alperton Engineering Ltd. 48 Moyle Road Dublin Industrial Estate Glasnevin, Dublin 11	Tel. +353 1 830-6277 Fax +353 1 830-6458

Israel			
Sales	**Tel-Aviv**	Liraz Handasa Ltd. Ahofer Str 34B / 228 58858 Holon	Tel. +972 3 5599511 Fax +972 3 5599512 lirazhandasa@barak-online.net

Italy			
Assembly **Sales** **Service**	**Milano**	SEW-EURODRIVE di R. Blickle & Co.s.a.s. Via Bernini,14 I-20020 Solaro (Milano)	Tel. +39 2 96 9801 Fax +39 2 96 799781 sewit@sew-eurodrive.it

Ivory Coast			
Sales	**Abidjan**	SICA Ste industrielle et commerciale pour l'Afrique 165, Bld de Marseille B.P. 2323, Abidjan 08	Tel. +225 2579-44 Fax +225 2584-36

Japan			
Assembly **Sales** **Service**	**Toyoda-cho**	SEW-EURODRIVE JAPAN CO., LTD 250-1, Shimoman-no, Toyoda-cho, Iwata gun Shizuoka prefecture, 438-0818	Tel. +81 538 373811 Fax +81 538 373814 sewjapan@sew-eurodrive.co.jp

Korea			
Assembly **Sales** **Service**	**Ansan-City**	SEW-EURODRIVE KOREA CO., LTD. B 601-4, Banweol Industrial Estate Unit 1048-4, Shingil-Dong Ansan 425-120	Tel. +82 31 492-8051 Fax +82 31 492-8056 master@sew-korea.co.kr

Latvia			
Sales	**Riga**	SIA Alas-Kuul Katlakalna 11C LV-1073 Riga	Tel. +371 7139386 Fax +371 7139386 info@alas-kuul.ee

Lebanon			
Sales	**Beirut**	Gabriel Acar & Fils sarl B. P. 80484 Bourj Hammoud, Beirut	Tel. +961 1 4947-86 +961 1 4982-72 +961 3 2745-39 Fax +961 1 4949-71 gacar@beirut.com

Lithuania			
Sales	**Alytus**	UAB Irseva Merkines g. 2A LT-4580 Alytus	Tel. +370 315 79204 Fax +370 315 79688 irmantas.irseva@one.lt

Luxembourg			
Assembly **Sales** **Service**	**Brüssel**	CARON-VECTOR S.A. Avenue Eiffel 5 B-1300 Wavre	Tel. +32 10 231-311 Fax +32 10 231-336 http://www.caron-vector.be info@caron-vector.be

Malaysia			
Assembly **Sales** **Service**	**Johore**	SEW-EURODRIVE SDN BHD No. 95, Jalan Seroja 39, Taman Johor Jaya 81000 Johor Bahru, Johor West Malaysia	Tel. +60 7 3549409 Fax +60 7 3541404 kchtan@pd.jaring.my

Morocco			
Sales	**Casablanca**	S. R. M. Société de Réalisations Mécaniques 5, rue Emir Abdelkader 05 Casablanca	Tel. +212 2 6186-69 + 6186-70 + 6186-71 Fax +212 2 6215-88 srm@marocnet.net.ma

Netherlands			
Assembly **Sales** **Service**	**Rotterdam**	VECTOR Aandrijftechniek B.V. Industrieweg 175 NL-3044 AS Rotterdam Postbus 10085 NL-3004 AB Rotterdam	Tel. +31 10 4463-700 Fax +31 10 4155-552 http://www.vector.nu info@vector.nu

New Zealand			
Assembly **Sales** **Service**	**Auckland**	SEW-EURODRIVE NEW ZEALAND LTD. P.O. Box 58-428 82 Greenmount drive East Tamaki Auckland	Tel. +64 9 2745627 Fax +64 9 2740165 sales@sew-eurodrive.co.nz
	Christchurch	SEW-EURODRIVE NEW ZEALAND LTD. 10 Settlers Crescent, Ferrymead Christchurch	Tel. +64 3 384-6251 Fax +64 3 384-6455 sales@sew-eurodrive.co.nz

Norway			
Assembly **Sales** **Service**	**Moss**	SEW-EURODRIVE A/S Solgaard skog 71 N-1599 Moss	Tel. +47 69 241-020 Fax +47 69 241-040 sew@sew-eurodrive.no

Peru			
Assembly **Sales** **Service**	**Lima**	SEW DEL PERU MOTORES REDUCTORES S.A.C. Los Calderos, 120-124 Urbanizacion Industrial Vulcano, ATE, Lima	Tel. +51 1 3495280 Fax +51 1 3493002 sewperu@sew-eurodrive.com.pe

Poland			
Assembly **Sales** **Service**	**Lodz**	SEW-EURODRIVE Polska Sp.z.o.o. ul. Techniczna 5 PL-92-518 Lodz	Tel. +48 42 67710-90 Fax +48 42 67710-99 http://www.sew-eurodrive.pl sew@sew-eurodrive.pl

Portugal			
Assembly **Sales** **Service**	**Coimbra**	SEW-EURODRIVE, LDA. Apartado 15 P-3050-901 Mealhada	Tel. +351 231 20 9670 Fax +351 231 20 3685 http://www.sew-eurodrive.pt infosew@sew-eurodrive.pt

Romania			
Sales **Service**	**Bucuresti**	Sialco Trading SRL str. Madrid nr.4 011785 Bucuresti	Tel. +40 21 230-1328 Fax +40 21 230-7170 sialco@sialco.ro

Russia			
Sales	**St. Petersburg**	ZAO SEW-EURODRIVE P.O. Box 263 RUS-195220 St. Petersburg	Tel. +7 812 5357142 +812 5350430 Fax +7 812 5352287 http://www.sew-eurodrive.ru sew@sew-eurodrive.ru

Senegal			
Sales	**Dakar**	SENEMECA Mécanique Générale Km 8, Route de Rufisque B.P. 3251, Dakar	Tel. +221 849 47-70 Fax +221 849 47-71 senemeca@sentoo.sn

Serbia and Montenegro			
Sales	**Beograd**	DIPAR d.o.o. Kajmakcalanska 54 SCG-11000 Beograd	Tel. +381 11 3046677 Fax +381 11 3809380 dipar@yubc.net

Singapore			
Assembly **Sales** **Service**	**Singapore**	SEW-EURODRIVE PTE. LTD. No 9, Tuas Drive 2 Jurong Industrial Estate Singapore 638644	Tel. +65 68621701 ... 1705 Fax +65 68612827 sales@sew-eurodrive.com.sg

Slovakia			
Sales	**Sered**	SEW-Eurodrive SK s.r.o. Trnavska 920 SK-926 01 Sered	Tel. +421 31 7891311 Fax +421 31 7891312 sew@sew-eurodrive.sk

Slovenia			
Sales **Service**	**Celje**	Pakman - Pogonska Tehnika d.o.o. Ul. XIV. divizije 14 SLO – 3000 Celje	Tel. +386 3 490 83-20 Fax +386 3 490 83-21 pakman@siol.net

South Africa			
Assembly **Sales** **Service**	**Johannesburg**	SEW-EURODRIVE (PROPRIETARY) LIMITED Eurodrive House Cnr. Adcock Ingram and Aerodrome Roads Aeroton Ext. 2 Johannesburg 2013 P.O.Box 90004 Bertsham 2013	Tel. +27 11 248-7000 Fax +27 11 494-3104 dross@sew.co.za
	Capetown	SEW-EURODRIVE (PROPRIETARY) LIMITED Rainbow Park Cnr. Racecourse & Omuramba Road Montague Gardens Cape Town P.O.Box 36556 Chempet 7442 Cape Town	Tel. +27 21 552-9820 Fax +27 21 552-9830 Telex 576 062 dswanepoel@sew.co.za
	Durban	SEW-EURODRIVE (PROPRIETARY) LIMITED 2 Monaceo Place Pinetown Durban P.O. Box 10433, Ashwood 3605	Tel. +27 31 700-3451 Fax +27 31 700-3847 dtait@sew.co.za

Spain			
Assembly **Sales** **Service**	**Bilbao**	SEW-EURODRIVE ESPAÑA, S.L. Parque Tecnológico, Edificio, 302 E-48170 Zamudio (Vizcaya)	Tel. +34 9 4431 84-70 Fax +34 9 4431 84-71 sew.spain@sew-eurodrive.es

Sweden			
Assembly **Sales** **Service**	**Jönköping**	SEW-EURODRIVE AB Gnejsvägen 6-8 S-55303 Jönköping Box 3100 S-55003 Jönköping	Tel. +46 36 3442-00 Fax +46 36 3442-80 http://www.sew-eurodrive.se info@sew-eurodrive.se

Switzerland			
Assembly **Sales** **Service**	**Basel**	Alfred Imhof A.G. Jurastrasse 10 CH-4142 Münchenstein bei Basel	Tel. +41 61 41717-17 Fax +41 61 41717-00 http://www.imhof-sew.ch info@imhof-sew.ch

Thailand			
Assembly **Sales** **Service**	**Chon Buri**	SEW-EURODRIVE (Thailand) Ltd. Bangpakong Industrial Park 2 700/456, Moo.7, Tambol Donhuaroh Muang District Chon Buri 20000	Tel. +66 38 454281 Fax +66 38 454288 sewthailand@sew-eurodrive.co.th

Tunisia			
Sales	**Tunis**	T. M.S. Technic Marketing Service 7, rue Ibn El Heithem Z.I. SMMT 2014 Mégrine Erriadh	Tel. +216 1 4340-64 + 1 4320-29 Fax +216 1 4329-76

Turkey			
Assembly **Sales** **Service**	**Istanbul**	SEW-EURODRIVE Hareket Sistemleri Sirketi Bagdat Cad. Koruma Cikmazi No. 3 TR-34846 Maltepe ISTANBUL	Tel. +90 216 4419163 + 216 4419164 + 216 3838014 Fax +90 216 3055867 sew@sew-eurodrive.com.tr

USA			
Production **Assembly** **Sales** **Service**	**Greenville**	SEW-EURODRIVE INC. 1295 Old Spartanburg Highway P.O. Box 518 Lyman, S.C. 29365	Tel. +1 864 439-7537 Fax Sales +1 864 439-7830 Fax Manuf. +1 864 439-9948 Fax Ass. +1 864 439-0566 Telex 805 550 http://www.seweurodrive.com cslyman@seweurodrive.com
Assembly **Sales** **Service**	**San Francisco**	SEW-EURODRIVE INC. 30599 San Antonio St. Hayward, California 94544-7101	Tel. +1 510 487-3560 Fax +1 510 487-6381 cshayward@seweurodrive.com
	Philadelphia/PA	SEW-EURODRIVE INC. Pureland Ind. Complex 2107 High Hill Road, P.O. Box 481 Bridgeport, New Jersey 08014	Tel. +1 856 467-2277 Fax +1 856 845-3179 csbridgeport@seweurodrive.com
	Dayton	SEW-EURODRIVE INC. 2001 West Main Street Troy, Ohio 45373	Tel. +1 937 335-0036 Fax +1 937 440-3799 cstroy@seweurodrive.com
	Dallas	SEW-EURODRIVE INC. 3950 Platinum Way Dallas, Texas 75237	Tel. +1 214 330-4824 Fax +1 214 330-4724 csdallas@seweurodrive.com
	Additional addresses for service in the USA provided on request!		

Venezuela			
Assembly **Sales** **Service**	**Valencia**	SEW-EURODRIVE Venezuela S.A. Av. Norte Sur No. 3, Galpon 84-319 Zona Industrial Municipal Norte Valencia, Estado Carabobo	Tel. +58 241 832-9804 Fax +58 241 838-6275 sewventas@cantv.net sewfinanzas@cantv.net

How we're driving the world

With people who think fast and develop the future with you.

With a worldwide service network that is always close at hand.

With drives and controls that automatically improve your productivity.

With comprehensive knowledge in virtually every branch of industry today.

With uncompromising quality that reduces the cost and complexity of daily operations.

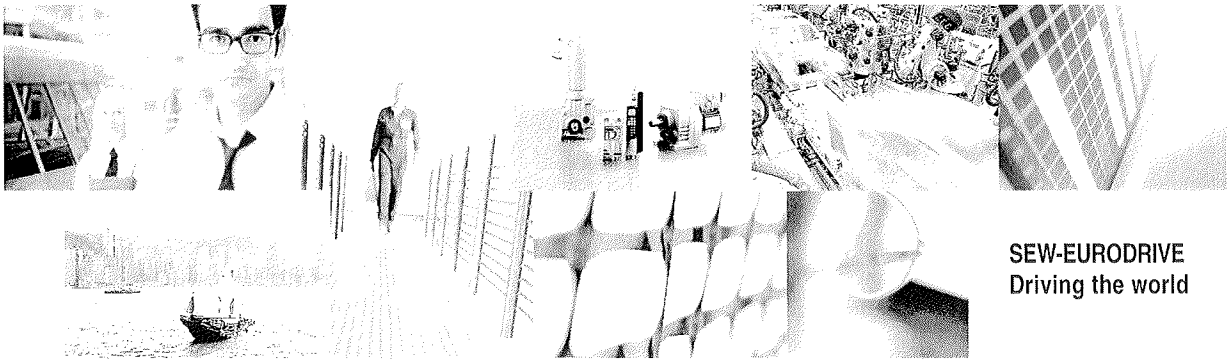

SEW-EURODRIVE
Driving the world

With a global presence that offers responsive and reliable solutions. Anywhere.

With innovative technology that solves tomorrow's problems today.

With online information and software updates, via the Internet, available around the clock.

SEW-EURODRIVE GmbH & Co KG
P.O. Box 3023 · D-76642 Bruchsal / Germany
Phone +49 7251 75-0 · Fax +49 7251 75-1970
sew@sew-eurodrive.com
→ **www.sew-eurodrive.com**

OPERATION

&

MAINTENANCE MANUAL FOR THREE PHASE INDUCTION MOTORS

TECO-Westinghouse Motor Company
5100 North IH-35
Round Rock, Tx. 78681

INDEX PAGE

1. INTRODUCTION……. 1
2. ACCEPTING, INSPECTION, STORAGE, TRANSPORTATION…… 2
3. INSTALLATION…….. 4
   3.1 Site and environment for motor installation…….. 4
   3.2 Foundation…….. 4
   3.3 Installation of shaft coupling…….. 6
   3.4 Installation of belt drive…… 9
   3.5 Conveyance with chain or gear……. 10
   3.6 Electrical connections……. 11
4. OPERATION…… 12
   4.1 Examination before starting…… 12
   4.2 Starting operation…….. 15
5. MAINTENANCE…….. 17
   5.1 Major points in regular inspection and maintenance…….. 17
   5.2 Motor windings……... 18
   5.3 Cleaning of the interior of the motor…… 18
   5.4 Cleaning of the exterior of the motor……... 19
   5.5 Maintenance of anti-friction bearings…….. 19
      5.5.1 Frequency of re-lubrication…….. 19
      5.5.2 Kinds of grease…… 20
      5.5.3 Grease quantity…… 20
      5.5.4 Re-greasing…….. 20
      5.5.5 Oil re-lubrication……. 22
      5.5.6 Cleaning and installation of bearings…… 23
   5.6 Maintenance of sleeve bearings…… 24
      5.6.1 Daily inspection……... 24
      5.6.2 Regular examination…….. 24
      5.6.3 Disassembly……. 25
      5.6.4 Re-assembly……. 26
   5.7 Maintenance of slip rings (for Wound Rotor only)…… 27
   5.8 Maintenance of non-reverse ratchet mechanism (Vertical Motors only) 29
6. FAULT FINDING AND RECOGNITION…….. 31

1. INTRODUCTION

This and the following instruction address the more common situations encountered in motor installation, operation and maintenance. For the TWMC motor warranty to be and to remain in effect, the motor must be installed and operated in strict accordance with the outline drawing, motor nameplates and these instructions and must not be altered or modified in any unauthorized manner.

During the installation and operation of motors in heavy industrial applications there is a danger of live electrical parts and rotating parts. Therefore to prevent injury and/or damage the basic planning work for installation, transportation, assembly, operation, etc... needs to be done and checked by authorized and competent personnel only.

Since these instructions cannot cover every eventuality of installation, operation and maintenance, the following points should be considered and checked.

- The technical data and information on permissible use such as assembly, connection, ambient and operating conditions given in the related catalogue, operating instructions, nameplates and other production documentation.
- The general erection and safety regulations.
- The local and plant-specific specifications and requirements.
- The proper use of transport, lifting devices and tools.
- The use of personal protective equipment.

Following indications should be observed when reading these instructions.

Safety instructions are marked as follows:

Warning of electric hazards for personnel.

Warning of dangers for personnel.

ATTENTION!
Warning of damage for the motor or installation.

2. ACCEPTING, INSPECTION, STORAGE, TRANSPORTATION

Inspection upon receipt
Check to following points upon receipt:

- Are the nameplate ratings identical with what you ordered?
- Are dimensions and color in compliance with your specifications?
- Are the nameplate ratings for space heater, thermal protector, temperature detector, etc. identical with what you ordered?
- Is there any damage?
- Are all accessories and accompanying instruction manuals in good order?
- Please ensure that the arrow head indicator really indicates direction of rotation.
- If there are any specific requirements, please ensure they are in conformity with your specifications.

2.1 Storage
When motors are not in operation, the following precautionary measures should be undertaken to assure best performance.

2.2 Place
(a) High and dry, well ventilated without direct sun, dust or corrosive gas.
(b) Not located near to a boiler or freezer.
(c) Entirely free form vibration and easy for movements.
(d) Motors should be put on pallets to prevent moisture.

2.3 Moisture prevention
Since moisture can be very detrimental to electrical components, the motor temperature should be maintained about 3ºC above the dew point temperature by providing either external or internal heat. If the motor is equipped with space heaters, they should be energized at the voltage shown by the space heater nameplate attached to the motor. Incandescent light bulbs can be placed within the motor to provide heat. However, if used, they must not be allowed to come in contact with any parts of the motor because of the concentrated hot spot that could result.

2.4
Even during storage, the insulation resistance should be kept above the specified values.
(a) For measurement of insulation resistance and acceptable standard values, please refer to measures stated in 4.1.2 “Measurement of insulation resistance”.
(b) Insulation resistance test should be performed once every three months.

2.5

If the motor is not in operation for a long period (one week and above) after installation or has been in operation but stopped for a period of time, the following precautions must be taken.

(a) Protect the motor as measures stated in 2.3.
(b) Insulation resistance test should be performed as stated in 2.4.

2.6 Bearing protection

(a) If the motor has been provided with a shaft shipping brace to prevent shaft movement during transit, it must be removed before operating the motor. It is very important that this brace be re-installed exactly as it was originally, before the motor is moved form storage or any time when the motor is being transported. This prevents axial rotor movement that might damage the bearings.
(b) Motors equipped with sleeve bearings are shipped from the factory with the bearing oil reservoirs drained. In storage, the oil reservoirs should be properly filled to the center of the oil level gauge with a good grade of rust inhibiting oil. To keep the bearing journals well oiled and to prevent rusting, the motor shaft should be rotated several revolutions about every month ensuring the shaft does not come to rest in its original position. While the shaft is rotating, it should be pushed to both extremes of the endplay.
(c) Motors with anti-friction bearings are properly lubricated with the correct grade of grease at the factory and no further greasing is required in storage. The shaft should be rotated several revolutions about every month to maintain proper distribution of the grease within the bearings.
(d) Tilt-pad bearings are a type of sleeve bearing used in special design applications. Due to the nature of this bearing, a loose oil ring for delivering lubricant cannot be provided. Therefore, during the storage internal, oil must be periodically manually introduced into the pads and housing to prevent the occurrence of oxidation of the precision machined components.
    (1) Remove the pipe plug from the bearing cap located above the tilt-bearing shell.
    (2) Pour in approximately one cup of oil every month and rotate the shaft a few revolutions about every two (2) weeks.
    (3) For long periods of storage, the oil that accumulates in the housing should be removed.

ATTENTION!
Care should be taken to keep parts such as fitting surfaces, key, shaft extension and axial central hole from any collision with foreign matter. Grease should also be generously applied to prevent rusting.

2.7 Transportation

To keep the rotating parts of motors from moving, thus preventing damage and scratching during transportation, they should be held securely with a locking device. Remove all transit clamps before operating the motor. It is very important that this device be reinstalled exactly as it was originally, before the motor is moved from storage or any time when the motor is being transported. The vertical mounting type motors should be transported in the vertical position.

Do not use the hoisting hook/eyebolts to lift more that the motor itself. They are designed to support the motor only. Make sure the hoisting hook is correctly attached to the eyebolt(s)/lug(s) are fully screwed in before hoisting. Also note such parts as fan cover, ventilation box, bracket, slip-ring, etc. may have their own hoisting lugs which can only carry their own weight. Nothing extra should be attached while hoisting.
Do not twist the steel wires and make sure the eyebolts have been firmly screwed and the sling angle is correct.

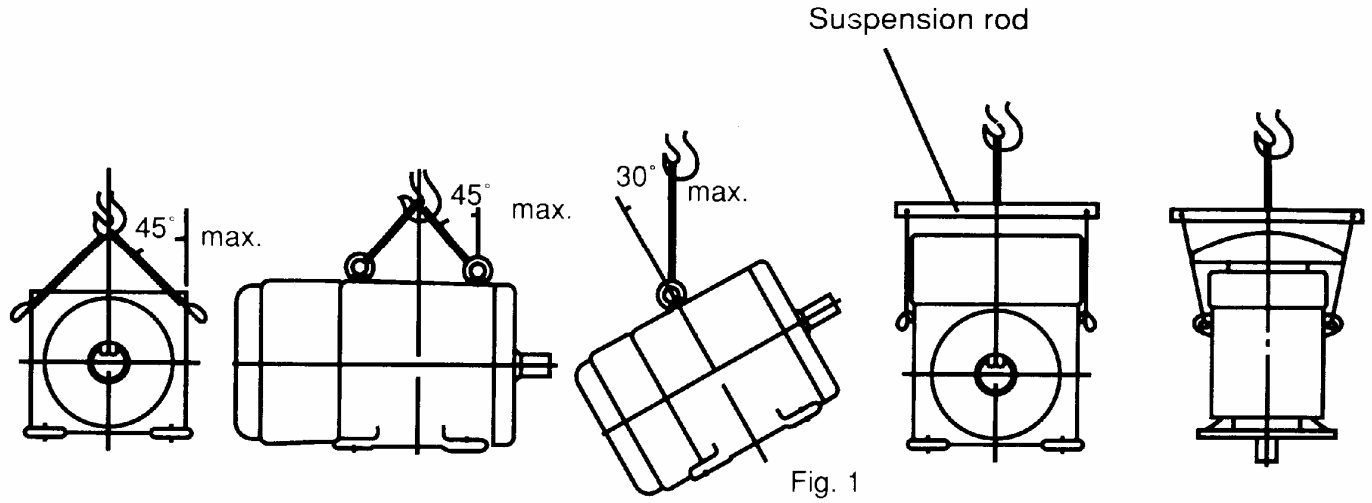

Fig. 1

3 INSTALLATION

Site and environment for motor installation

3.1.1

Standard environment and site conditions for the installation of motors are usually set as follows:

(a) Ambient temperature: -10~40ºC
(b) Humidity: Relative humidity below 90%RH for totally enclosed types, and below 80%RH for semi-enclosed types.
(c) Elevation: below 1000 meters or 3300 feet.
(d) Harmful gases, liquids, dusts, high moisture should be absent.
(e) Foundations should be strong and free of vibration.

If there are any special environmental conditions, please inform TWMC prior o ordering.

3.1.2 Ventilation and space

(a) Installation area should be well ventilated.
(b) The installation space should be large enough to facilitate heat dissipation and maintenance.

3.2 Foundation

3.2.1

Use rigid and solid sole plate or common bed as foundation.
For best motor performance, it is advisable to use a sole plate or common bed, particularly when using a shaft coupling.

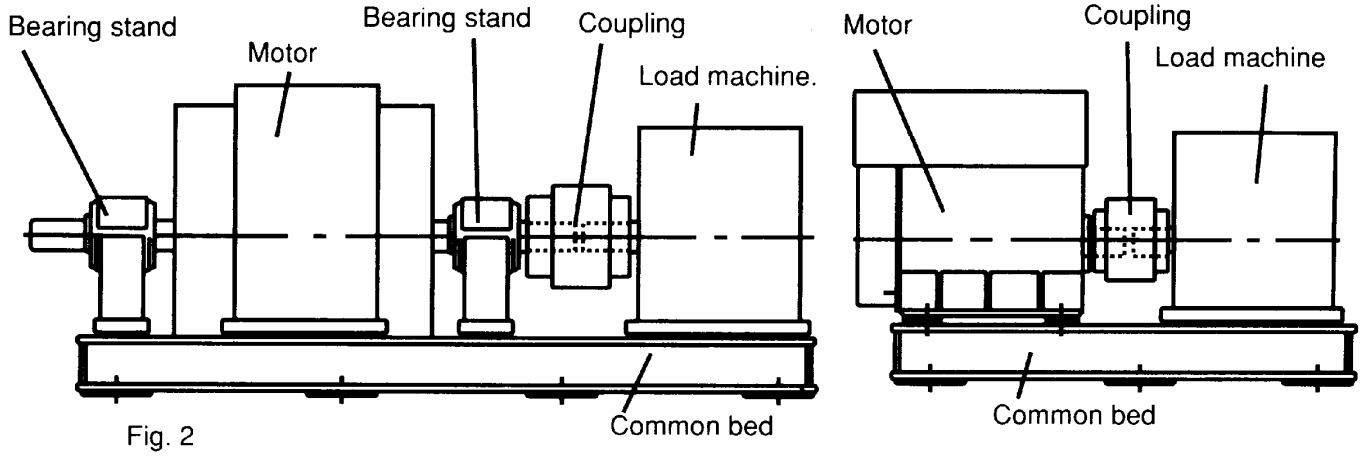

Fig. 2

3.2.2 Installation

(a) Select an appropriate foundation surface for the sole plate or common bed, which will be, considered the ultimate level.
(b) Align the position of the common bed with reference to that level.
(c) Align the level accuracy at least at four points such as bearing mounting, shaft extension etc. The accuracy should be within 0.04mm or .0015 inches
(d) Sole plate or common bed should be embedded in concrete foundation as illustrated in Fig. 3. Stiff pads should also be installed beneath the wedges, which are welded together at various spots about 400-500mm (15.75-19.70 inches) apart etc., to enable the foundation to carry evenly the weight of the whole motor.
(e) The base should be sturdy and rigid to keep it flat and level.
(f) Make sure the mortar and concrete are completely dry, and the precision of the level is acceptable, and then set the motor on the mounting foundation.
(g) Accurately install shaft couplings, belt sheaves etc., then weld the wedges solid to prevent untoward change in position.

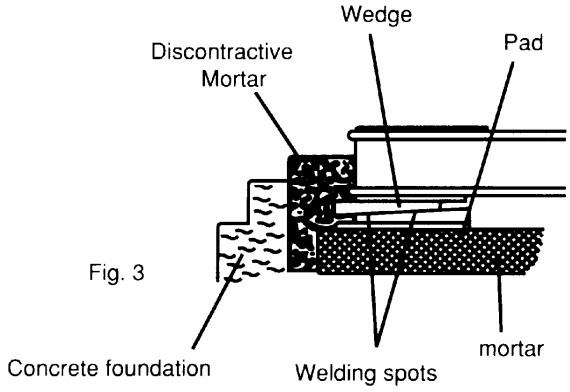

Fig. 3

3.2.3 The foundation of vertical induction motors: (Also the foundation of pump)

(a) Foundation of motor/pump must be rigid and secure to provide adequate support. There must be no vibration, twisting, misalignment etc. due to inadequate foundations.
(b) A massive concrete foundation is preferred in order to minimize vibration. Rigidity and stability are enhanced by prop plate and foundation bolt. As shown in Fig. 4.

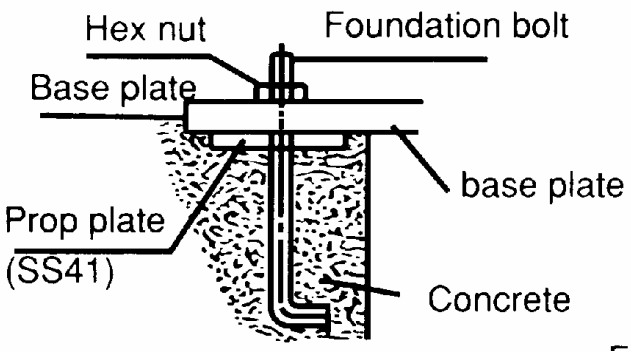

Fig. 4

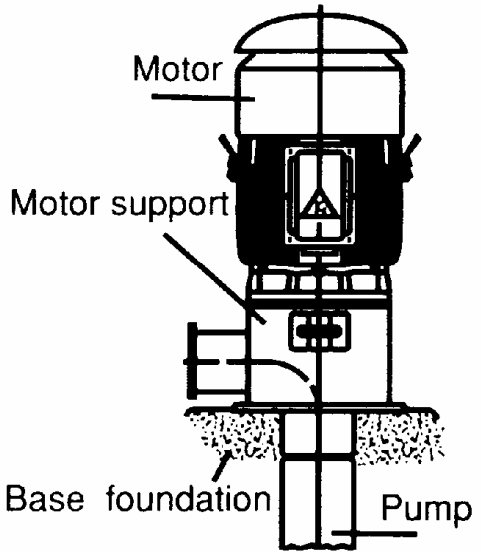

Fig. 5

3.2.4 Installation of vertical motors:

(a) All mounting surfaces must be clean and level.
(b) Foundation must be leveled at least at 4 points and guaranteed to be below 0.04mm (.0015 in.) flat and level.
(c) Make sure the mortar and concrete are completely dry, and the precision of the level is acceptable, and then set the motor on the mounting foundation.
(d) Accurately install shaft couplings.

3.3 Installation of shaft coupling

ATTENTION!
Motors must always be accurately aligned, and this applies especially where they are directly coupled.
Incorrect alignment can lead to bearing failure, vibration and even shaft fracture. As soon as bearing failure or vibration is detected, the alignment should be checked.

3.3.1
Field application of a coupling to the motor shaft should follow the procedures recommended by the coupling manufacturer. The motor shaft extension must not be subjected to either extreme heat or cold during coupling installation.

ATTENTION!
Basically, the coupling should be heated and pushed onto the shaft extension with slight axial force. Do not hammer coupling to prevent bearing damage.

3.3.2
Although the sleeve bearings are equipped with thrust faces, these are intended only to provide momentary axial restraint of rotor movement either during start-up or when operating the motor disconnected from the driven equipment. They must not be operated under a constant thrust load unless they were originally designed for this condition.

Motors with either sleeve or anti-friction bearings are suitable for connection to the driven load through a flexible coupling. Coupling solidly to the load is not acceptable. With sleeve bearings, the flexible coupling should be of the limited end float type to prevent the possibility of any end thrust from load being transmitted to the motor bearings, which could cause bearing damage. The recommended limits of end float are as follows:

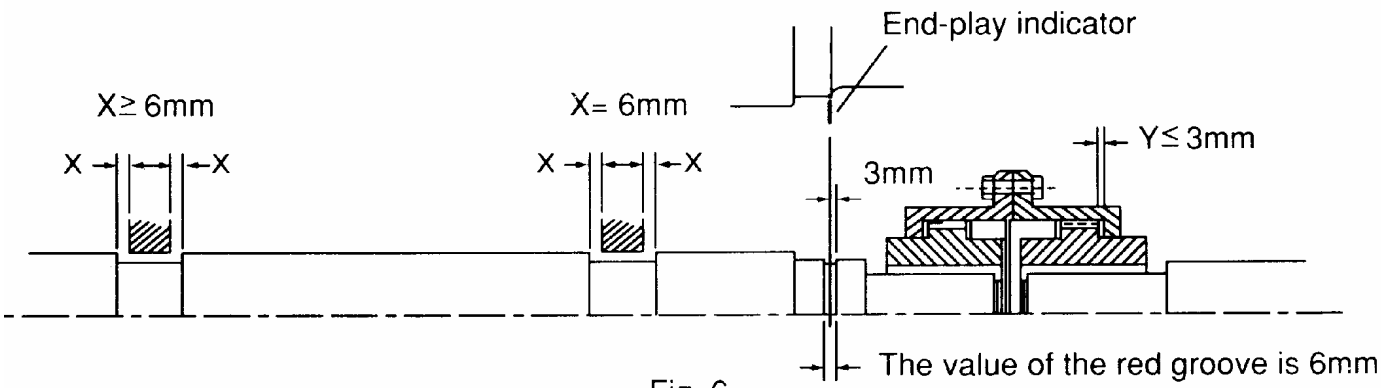

Fig. 6

(a) When the motor is in operation after installation, be sure that the end-play indicator is within the 6mm (.236 in.) of the groove on the shaft or aligned to the shaft shoulder immediately outboard of the drive-end bearing to assure there is low friction between shaft and bearing.

(b) Unless otherwise specified, the designed end-play value X of the groove for TWMC motors in general is within 6mm (.236 in.) as illustrated in Fig. 6. In essence, the endplay indicator is adjusted to point at the center of the groove or the drive-end shaft shoulder; thus X equals to 6±1mm or so, and the endplay value (Y) of the couplings should equal or be smaller than 3mm (.118 in.).

(c) If the desired value Y is grater than 3mmm (.118 in.) caused for instance by a thrust load and/or load machine with large end-play, please inform TWMC prior to entering an order.

3.3.3

In aligning the motor (and rotor) axially with the driven equipment, consideration should be given not only to the endplay indicator position but also to axial shaft expansion and increase in shaft centerline height due to thermal effects. In general, the axial shaft growth for motors can be disregarded since neither bearing is fixed and any shaft growth due to temperature increase will produce an elongation away from the coupling.

Shaft height growth (change in shaft centerline elevation) for TEFC machines can be calculated as follows:

$$\Delta = (0.0005") \times (\text{motor foot to shaft £ dimension})$$

For non-TEFC machines, divide the number by 2.

3.3.4

It is desirable, in normal operation that the motor operates on its magnetic center, so that no axial force is exerted on the coupling.

The motor shaft and the driven shaft should be aligned within the following tolerances in both angular and parallel alignment:

Unit: mm

TIR	Range of rotating speed	Solid coupling	Flexible coupling
C	2500 rpm and above	0.03	0.03
	Below 2500 rpm	0.04	0.05
A	2500 rpm and above	0.03	0.03
	Below 2500 rpm	0.03	0.04

Angular misalignment is the amount by which the centerlines of driver and driven shafts are skewed. It can be measured using a dial indicator set up as shown in Fig. 7. The couplings are rotated together through 360 degrees so that the indicator does not measure runout of the coupling hub face. The shafts should be forced against either the in or out extreme of their end float while being rotated.

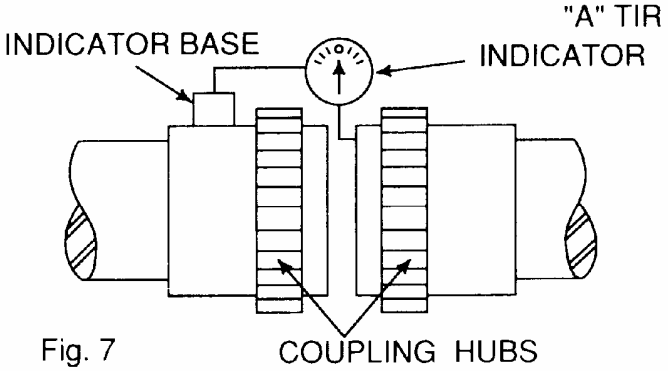

Fig. 7
TIR=Total indicator reading (by dial indicator)

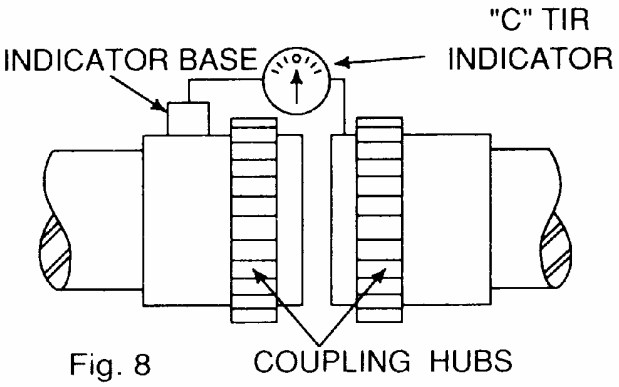

Fig. 8

Parallel misalignment is the amount by which the centerlines of the driver and driven shafts are out of parallel. It can be measured using a dial indicator set up as shown in Fig. 8. Again, the couplings are rotated together through 360 degrees so that the indicator does not measure runout of the coupling hub outside diameter.

3.3.5

After the motor has been properly aligned with the driven equipment and the hold-down bolts have been installed and tightened, for motors with fabricated frames, at least two dowel pins should be installed in two diagonally opposite motor feet.

3.3.6 Installation of shaft coupling: (Vertical hollow shaft motor only)

Bolted Coupling as shown in Fig. 9

(a) Bearings are provided to absorb some upward shaft thrust when the coupling is fitted.
(b) The coupling is fastened with bolts.
(c) This coupling type is not auto-release type.

Note: Standard high thrust motors can absorb momentary up-thrust load up to 30% of the standard down thrust load. If the up-thrust is long in duration (over 10 Seconds) and/or exceeds 30% of the standard high thrust rating, special design arrangements are required and standard motor is not suitable.

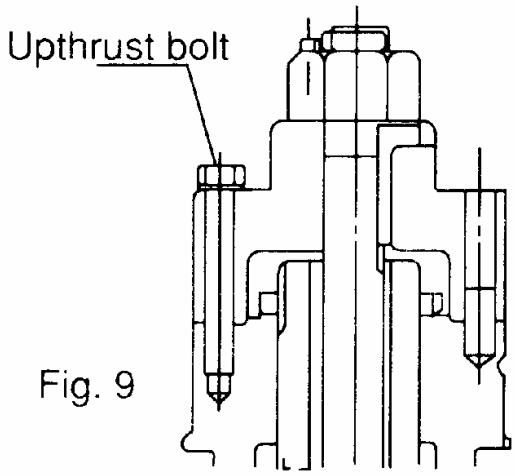

Fig. 9

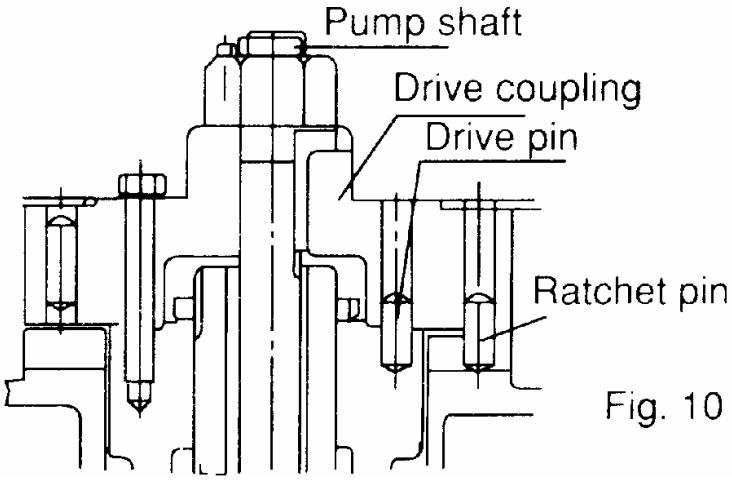

Fig. 10

3.3.7 Non-reverse ratchet/coupling, as Fig. 10 (If necessary)

The non-reverse coupling is also a bolted type and,

(a) It prevents the pump and motor from rotating in the reverse direction.
(b) It also prevents damage form over speeding and damage to pump shaft and bearings.
(c) The ratchet pins are lifted by the ratchet teeth and are held clear by centrifugal force and friction as the motor comes up to speed.
(d) When power is removed, speed decreases, and the pins fall. At the instant of reversal, a pin will catch in a ratchet tooth and prevent backward rotation.
(e) When installing the non-reverse coupling, do not use lubricant. Lubricant will interfere with proper operation. The top half of the coupling should seat solidly on the lower half and the pins should touch the bottom of the pockets between the teeth in the plate.
(f) As with the bolted coupling, the up-thrust capabilities are 30% of the standard high thrust rating for down thrust.

ATTENTION!
Do not apply non-reverse ratchets on applications in which the pump reversal time from shutdown (the instant the stop button is pressed) to zero speed is less than one second.

3.4 Installation for belt drive

In general, power transmission though direct flexible coupling is appropriate for large motors. Such motors are not suitable for belt, chain or gear connection unless specially designed for such service. However, for small and medium motors of which outputs within the ranges shown on table below, it is acceptable to use belt transmission as indicated. Beyond these ranges, do not apply belt sheaves unless specially designed.

3.4.1

The diameter ratio between conveyance sheaves should not be greater than 5 to 1 for flat belts, and 8 to 1 for V-belts. It is also advisable to limit the belt velocity to under 35m/sec (115 ft/sec) to limit belt abrasion and vibration. The smaller the outer diameter of the V-belt sheave, the greater the shaft bending stress will be. If the bending stress is in excess of the shaft fatigue stress, the shaft may break. Therefore, please inform TWMC when you have decided the size of the sheaves and the length of the belts upon ordering.

ATTENTION!
Place the sheave and belt as close as possible to the motor body (it is advisable to make x as shown in Fig. 11 equal to 0) to reduce the bending moment and improve shaft life.

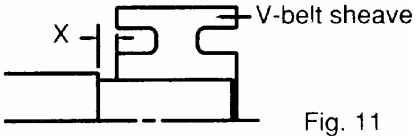

Fig. 11

3.4.2 Table of belt-sheave application for general electric motors

Output (KW/HP)			V-Belt Sheave							
			Conventional V-Belts				Narrow V-Belts			
4P	6P	8P	V-Belt Type	Number Of Belts	Min. PCD (mm)	Max Width (mm)	V-Belt Type	Number Of Belts	Min. PCD (mm)	Max Width (mm)
11/15	-	-	B	4	160	82	3V	4	125	48
-	11/15	-	B	5	170	101	3V	5	140	59
-	-	11/15	B	5	190	101	3V	6	160	69
15/20	-	-	B	5	170	101	3V	6	125	69
-	15/20	-	B	5	224	101	3V	6	160	69
-	-	15/20	C	4	224	111	5V	3	180	60
18.5/25	-	-	B	5	200	101	3V	6	140	69
-	18.5/25	-	C	4	224	111	5V	3	180	60
-	-	18.5/25	C	5	224	136	5V	4	180	78
22/30	-	-	B	5	224	101	5V	6	160	69
-	22/30	-	C	5	224	136	3V	4	180	78
-	-	22/30	C	5	250	136	5V	4	200	78
30/40	-	-	C	5	224	136	5V	4	180	78
-	30/40	-	C	5	265	136	5V	4	224	78
-	-	30/40	C	6	265	162	5V	5	224	95
37/50	-	-	C	6	224	162	5V	4	200	78
-	37/50	-	C	6	265	162	5V	4	224	78
-	-	37/50	C	7	280	187	5V	5	250	95
45/60	-	-	C	6	265	162	5V	4	224	78
-	45/60	-	C	7	280	187	5V	5	224	95
-	-	45/60	C	7	315	187	5V	6	250	113
55/75	-	-	C	7	265	187	5V	5	224	95
-	55/75	-	C	8	300	213	5V	6	250	113
-	-	55/75	D	5	355	196	5V	6	280	113
75/100	-	-	C	8	315	213	5V	6	250	113
-	75/100	-	D	6	355	233	5V	6	315	113
-	-	75/100	D	6	400	233	5V	6	355	113
-	90/120	-	D	6	400	233	5V	6	355	113
-	-	90/120	D	6	425	233	8V	4	355	124
-	110/150	-	D	7	400	270	8V	4	355	124
-	132/175	110/150	D	7	450	270	8V	4	400	124
-	160/200	132/175	D	9	450	344	8V	4	450	124

3.5 Conveyance with chain or gear

3.5.1

Make sure the loading capacity of shaft and bearings is appropriate for the size and installation position (overhung) of chain and gear. If necessary, please contact us to ensure the shaft and bearings will meet your requirements.

3.5.2
Pay close attention to ensure the parallelism of shafts.

3.5.3
The teeth of couplings should be correctly and precisely matched; the force conveyance centers should lie on the same line.

3.5.4
There should be no skip, jumping, vibration or unusual noises.

ATTENTION!
Do not hammer the conveyance devices such as couplings, belt sheaves, chain wheels, gears etc. onto the shaft. Those shaft fitments should be fitted and removed only by means of suitable devices. Heat shrinking may be a better alternative to avoid damaging bearings and components.

The exposed rotating parts should be covered to prevent accidents.

3.6 Electrical connections
All interconnecting wiring for controls and grounding should be in strict accordance with local requirements such as the USA National Electrical Code and UK IEE wiring regulations. Wiring of motor and control, overload protection and grounding should follow the instructions of connection diagrams attached to the motor.

3.6.1 Power
The rated conditions of operation for the motor are as shown on the nameplate. Within the limits, given below, of voltage and frequency variation from the nameplate values, the motor will continue to operate but with performance characteristics that may differ from those at rated conditions:

±10% of rated voltage
±5% of rated frequency
±10% combined voltage and frequency variation so long as frequency variation is no more than ±5% of rated.

Operating the motor at voltages and frequencies outside of the above limits can result in both unsatisfactory motor performance and damage to or failure of the motor.

3.6.2
The main lead box furnished with the motor has been sized to provide adequate space for the make-up of the connections between the motor lead cables and the incoming power cables.

The bolted joints between the motor lead and the power cables must be made and insulated in a workman-like manner following the best trade practices.

3.6.3
Either fabricated motors or fan cooled cast frame, motors are all provided with grounding pads or bolts.

The motor must be grounded by proper connection to the electrical system ground.

3.6.4
The rotation direction of the motor will be as shown by either a nameplate on the motor or the outline drawing. The required phase rotation of the incoming power for this motor rotation may also be stated. If either is unknown, the correct sequence can be determined in the following manner: While the motor is uncoupled from the load, start the motor and observe the direction of rotation. Allow the motor to achieve full speed before disconnecting it from the power source. Refer to the operation section of these instructions for information concerning initial start-up. If resulting rotation is incorrect, it can be reversed by interchanging any two (2) incoming cables.

3.6.5 Auxiliary devices
Auxiliary devices such as resistance temperature detectors, thermocouples, thermoguards, etc., will generally terminate on terminal blocks located in the auxiliary terminal box on the motor. Other devices may terminate in their own enclosures elsewhere on the motor. Such information can be obtained by referring to the outline drawing. Information regarding terminal designation and the connection of auxiliary devices can be obtained from auxiliary drawings or attached nameplates.
If the motor is provided with internal space heaters, the incoming voltage supplied to them must be exactly as shown by either a nameplate on the motor or the outline drawing for proper heater operation.

Caution must be exercised anytime contact is made with the incoming space heater circuit as space heater voltage is often automatically applied when the motor is shutdown.

4. OPERATION

4.1 Examination before start

4.1.1
When motors are installed in good manner, ensure the wiring is according to the diagram. Also, the following points should be noted:

(a) Make sure all wiring is correct.
(b) Ensure the sizes of cable wires are appropriate and all connections are well made for the currents they will carry.
(c) Ensure all connections are properly insulated for the voltage and temperature they will experience.
(d) Ensure the capacity of fuses, switches, magnetic switches and thermo relays etc. are appropriate and the contactors are in good condition.
(e) Make sure the frame and terminal box are grounded.
(f) Make sure that the starting method is correct.
(g) Make sure switches and starters are set at their right positions.
(h) Motor heaters must be switched off when the motor is running.

4.1.2 Measurement of insulation resistance

During and immediately after measuring, the terminals must not be touched as they may carry residual dangerous voltages. Furthermore, if power cables are connected, make sure that the power supplies are clearly disconnected and there are no moving parts.

(a) For rated voltage below 1000V, measured with a 500VDC megger.
(b) For rated voltage above 1000V, measured with a 1000VDC megger.
(c) In accordance with IEEE 43, clause 9.3, the following formula should be applied:

$$R \geq \left(\frac{\text{Rated voltage (v)}}{1000} + 1 \right) \times 10 (M\Omega)$$

(d) On a new winding, where the contaminant causing low insulation resistance is generally moisture, drying the winding through the proper application of heat will normally increase the insulation resistance to an acceptable level. The following are several accepted methods for applying heat to the winding:
   (1) If the motor is equipped with space heaters, they can be energized to heat the winding.
   (2) Direct current (as from a welder) can be passed through the winding. The total current should not exceed approximately 50% of rated full load current. If the motor has only three leads, two must be connected together to form one circuit through the winding. In this case, one phase will carry the fully applied current and each of the others, one-half each. If the motor has six leads (3 mains and 3 neutrals), the three phases should be connected into one series circuit.

Ensure there is adequate guarding so live parts cannot be touched.

   (3) Heated air can either blown directly into the motor or into a temporary enclosure surrounding the motor. The source of heated air should preferably be electrical as opposed to fueled (such as kerosene) where a malfunction of the fuel burner could result in carbon entering the motor.

ATTENTION!
Caution must be exercised, when heating the motor with any source of heat other than self contained space heaters, to raise the winding temperature at a gradual rate to allow any entrapped moisture to vaporize and escape without rupturing the insulation. The entire heating cycle should extend over 15-20 hours.

Insulation resistance measurements can be made while the winding is being heated. However, they must be corrected to 40ºC for evaluation since the actual insulation resistance will decrease with increasing temperature. As an approximation for a new winding, the insulation resistance will approximately halve for each 10ºC increase in insulation temperature above the dew point temperature.

(e) Should the resistance fail to attain the specified value even after drying, careful examination should be undertaken to eliminate all other possible causes, if any.

4.1.3 Power Source

(a) Ensure the capacity of the power source is sufficient.
(b) Ensure the supply voltage and frequency ratings are identical to those on the nameplate.
(c) Voltage variation should be confined to within ±10% of the rated value and the phase to phase voltages should be balanced.

4.1.4 Bearing lubrication

(a) For sleeve bearing motors, the oil reservoir must be filled with oil to the correct level. On self-lubricated bearings, the standstill oil level will be at the center of the oil gauge. The proper oil is a rust and oxidation inhibited, turbine grade oil. Refer to the lubrication nameplate for the recommended viscosity.

(b) Motors, which are supplied with provision for flood lubrication, have an inlet orifice to meter the oil flow to the bearing. Refer to the outline drawing for these values. If the supply pressure does not match that stated on the outline, the orifice size must be adjusted to produce the specified flow rate. The drain adapter (also provided) has a weir plate fixed to the inside of the pipe to permit the establishment of the proper oil level. This weir plate must be located at the bottom of the pipe and must be parallel to the plane of the motor feet. To ensure optimum flow, the drain line should be vented to the atmosphere.

Oil inlet temperature:	Normal below 50ºC
	Alarm 60ºC
	Trip 65ºC

(c) If the motor is in storage for over three (3) months, refilling of some new oil should be undertaken before operation to prevent bearing damage due to dry friction. The oil level should be kept at the center of the oil gauge. If necessary, drain some oil after refilling.

(d) Motors that have been designed with anti-friction bearings for use with an oil mist lubrication system have been packed at the factory with a small amount of grease for short test runs. Continuous running should not be considered unless the oil mist system is installed and operating.

(e) Grease lubricant type

(1) The bearings have been well greased at the factory before delivery. However, regreasing is required if a significant period has elapsed between manufacture and use or in storage

(2) All motors with ZZ bearings will have SHELL Alvania R3 (*Lithium base grease*). All motors with open bearings will have Polyrex EM (polyurea base grease).

4.1.5 Cooling water for the cooler on water-cooled motors

Make sure the quality, volume and inlet temperature of cooling water for the motors are normal before the machine is in operation.

Water:	General tower water or industrial water.
Volume:	Please see outline drawing
Inlet temperature:	Normal below 30ºC
	Alarm 35ºC
	Trip 40ºC

ATTENTION!
Make sure all locks, which fasten the movable parts of the motors during transportation, are dismantled and the shaft can rotate freely.

ATTENTION!
Ensure there is no foreign matter or tools inside the motors before starting motors.

4.1.6
Make sure the transmission system, including belts, screws, bolts, nuts and set pins are in good condition.

The keys fitted to the shaft extensions are held by plastic tape only to prevent them from falling out during transportation or handling. The shaft key shall be removed to avoid flying out, when the motor is operated prior to the couplings etc. being fitted to the shaft extension.

4.1.7
Make sure the items above are examined. Test the motor running with or without load. Record and check according to "Maintenance" at 15-minute intervals during the first three hours of operation. Then regular examinations should take place at longer intervals. If all goes well the motor can be classified as "in good order".

4.2 Starting operation

4.2.1 Starting load
Initially run the motor unloaded prior to coupling to other machines. Unless otherwise specified, a motor usually starts with light load, which is then gradually increased, proportional to the square of the speed and at last reaches 100% load at full load speed.

4.2.2 Starting
Too frequent starts can be harmful to the motors. The following restrictions should be observed:

(a) Motor can be restarted should the initial start fail. Two starts are generally permissible when the motor is cold.
(b) Motor can be started only once when it is at normal running temperature.
(c) Should additional starts be necessary beyond the conditions stated above, the following restrictions should be noted:
  (1) Let the motor cool down for 60 minutes before restarting, fully loaded.
  (2) Let the motor cool down for 30 minutes before restarting, unloaded.
  (3) Two inching starts can be regarded as one normal start.

ATTENTION!
If the motor rotor fails to start turning within one or two seconds, shut off the power supply immediately.
Investigate thoroughly and take corrective action before attempting a restart.

Possible reasons for not starting are:
(1) Too low a voltage at the motor terminals.
(2) The load is too much for the rotor to accelerate.
(3) The load is frozen up mechanically.
(4) All electrical connections have not been made.
(5) Single-phase power has been applied.
(6) Any combination of the above.

4.2.3 Rotating direction

(a) Most TWMC motors are bi-directional. However, when some special types, such as high speed 2-Pole, certain large capacity motors, those with a non-reversing ratchet etc., should rotate in one direction, please ensure the rotation is in conformity with the directional arrow-mark shown on the attached nameplate.

(b) To reverse a bi-directional motor, cut the power and wait until the motor stops. Then interchange any two of the three phases.

4.2.4 Power source, Voltage, Current

(a) Ensure the voltage and frequency of the power source are identical to the ratings shown on the nameplate.

(b) Voltage variation should be confined to within ±10% of the rating and the three phase voltages should be in full balance

(c) Ensure the motor phase currents, when without load, are within ±5% of the average values.

4.2.5

Frequency variation should be confined to within ±5% of the rating. The aggregate variation of voltage and frequency should be confined to within ±10% of the absolute value of the ratings.

Starting time and unusual noises

ATTENTION!
Starting time is longer for the motors with large inertia. However, if starting time is longer than usual or if there is difficulty in starting, or there is abnormal noise, do not run the motor and refer to TWMC Service representative.

4.2.6 Sleeve bearing oil rings (sleeve bearing types only)

As the oil ring is used to carry lubricant to sleeve bearings, frequently check to ensure the oil ring is in motion.

4.2.7 Bearing temperature rise

Following the initial start-up, the bearing temperatures should be closely monitored. The rate of rise in bearing temperature is more indicative of impending trouble than is the actual temperature.

ATTENTION!
If the rate of rise in temperature is excessive or if the motor exhibits excessive vibration or noise, it should be shut down immediately and a thorough investigation made as to the cause before it is operated again.

If the bearing temperature rise and motor operation appear to be normal, operation should continue until the bearing temperature stabilizes.

Recommended limits on bearing temperature are as follows:

Sleeve Bearings	**Total measured temperature**
● By permanently installed detector	90ºC
● By temporary detector on top of the bearing sleeve near the oil ring	85ºC

Anti-Friction Bearings	Total measured temperature
● By permanently installed detector	100ºC
● By temporary detector measuring the outside of the bearing housing	95ºC

ATTENTION! (For sleeve bearing)

(1) It must be noted that when operating flood lubricated sleeve bearings without outside lubrication supplied, the bearing temperature must not be allowed to exceed 85ºC total temperature

(2) Under normal condition, for the self-lube bearing, the rate of temperature rise should be from 11 to 14ºC for the first ten (10) minutes after starting up and approximately 22ºC at thirty (30) minutes. The rate of bearing temperature rise is a function of the natural ventilation and operating conditions.

(3) When the rate of bearing temperature rise is less than 1ºC per half-hour, the bearing temperature is considered to be stabilized.

(4) If the total bearing temperature exceeds 95ºC, the motor should be shut down immediately.

Noise and Vibration

ATTENTION!
Any abnormal noise or vibration should be immediately investigated and corrected. Increased vibration can be indicative of a change in balance due to mechanical failure of a rotor part, a stator winding problem or a change in motor alignment.

5. MAINTENANCE

5.1 Major points in regular inspections and maintenance.

For safety, maintenance and repairs must only be carried out by properly trained personnel.

Some testing, such as insulation resistance, usually requires the motor to be stopped and isolated from power supplie(s).

Routine inspection and maintenance are usually performed by looking, listening, smelling and simple meters.

High temperature may arise under operating conditions on the motor surfaces, so that touching should be prevented or avoided. Keep away from moving and live parts. Unless deemed necessary, do not remove guards whilst assessing the motor.

Timely replacement of worn parts can assure longevity and prevent breakdown.

Routine inspection and regular inspection and maintenance are important in preventing breakdown and lengthening service life.

Owing to the varied time and circumstances, motors are used, it is difficult to set the items and periods for regular inspection and maintenance. However, as a guide it is recommended to be performed periodically according to factory maintenance program. Generally, the inspection scope determined by the following factors:

(a) Ambient temperature.
(b) Starting and stopping frequency.
(c) Troublesome parts usually affecting motor functions.
(d) Easily abraded parts.
(e) The important position of motor in the operational system of a factory should be duly recognized. Therefore, its health and wellbeing should be fully protected especially when it is operating in severe conditions.

5.2 Motor windings:

(a) Measurement of insulation resistance and standards to determine quality of insulation resistance, please refer to measures stated in 4.1.2 “Measurement of insulation resistance”.
(b) Inspection of coil-ends:
  (1) Grease and dust accumulated on coils may cause insulation deterioration and poor cooling effect.
  (2) Moisture must not accumulate. Keep coils warm when motor is not in use if moisture can be seen.
  (3) Discoloring. This is mainly caused by overheating.
(c) Ensure no untoward change of wedges from original position.
(d) Ensure the binding at the coil end is in its normal position.

5.3 Clean the interior of the motor:

(a) After a motor is in operation for some time, accumulation of dust, carbon powder and grease etc., on the inside is unavoidable, and may cause damage. Regular cleaning and examination is necessary to assure top performance.
(b) Points to note during cleaning:
  (1) If using compressed air or blower:
    (a) Compressed air should be free of moisture.
    (b) Maintain air pressure at 4 kg/cm^2, since high pressure can cause damage to coils.
  (2) Vacuum
    Vacuum cleaning can be used, both before and after other methods of cleaning, to remove loose dirt and debris. It is a very effective way to remove loose surface contamination from the winding without scattering. Vacuum cleaning tools should be non-metallic to avoid any damage to thee winding insulation
  (3) Wiping
    Surface contamination on the winding can be removed by wiping using a soft, lint-free wiping material. If the contamination is oily, the wiping material can be moistened (not dripping wet) with a safety type petroleum solvent. In hazardous locations, a solvent such as inhibited methyl chloroform may be used, but must be used sparingly and immediately removed. While this solvent is non-flammable under ordinary conditions, it is toxic and proper health and safety precautions should be followed while using it.

ATTENTION!
Solvents of nay type should never be used on windings provided with abrasion protection. Abrasion protection is a gray, rubber-like coating applied to the winding end-turns.

⚠ **Adequate ventilation must always be provided in any area where solvents are being used to avoid the danger of fire, explosion or health hazards. In confined areas (such as pits) each operator should be provided with an airline respirator, a hose mask or a self-contained breathing apparatus. Operators should wear goggles, aprons and suitable gloves. Solvents and their vapors should never be exposed to open flames or sparks and should always be stored in approved safety containers.**

(4) Keep core ducts completely clean. The difference in temperature rise could be around 10℃ before and after cleaning

5.4 Clean the exterior of the motor:

(a) On open ventilated motors, screens and louvers over the inlet air openings should not be allowed to accumulate any build-up of dirt, lint, etc. that could restrict free air movement.

ATTENTION!
Screens and louvers should never be cleaned or disturbed while the motor is in operation because any dislodged dirt or debris can be drawn directly into the motor.

(b) If the motor is equipped with air filters, they should be replaced (disposable type) or cleaned and reconditioned (permanent type) at a frequency that is dictated by conditions. It is better to replace or recondition filters too often than not often enough.

(c) Totally enclosed air to air cooled and totally enclosed fan cooled motors require special cleaning considerations. The external fan must be cleaned thoroughly since any dirt build-up not removed can lead to unbalance and vibration. All of the tubes of the air-to-air heat exchanger should be cleaned using a suitable tube brush having synthetic fiber bristles (not wire of any type).

5.5 Maintenance of anti-friction bearings

5.5.1 Frequency of re-lubrication:

The life of grease varies greatly as a result of types of model, revolution speed, temperature, operational conditions etc. It is, therefore, impossible to be precise about replenishment intervals. However, for normal direct coupling transmission, the periods shown as Table 1 may be used as a guide.

Remarks:

(a) The periods shown in Table 1 should be halved where bearings are used for belt drive and/or in dirty or high ambient temperature or high humidity environments.

(b) Please refer to the lubrication nameplate, if attached to the motor.

(c) For bearing numbers outside the range of Table 1, please contact TWMC

(d) If the periods referred to in Table 1 for drive-end bearing and opposite drive-end are different, for the convenience of maintenance operation, please take the shorter one the required grease replenishment period of these bearings.

5.5.2 Kinds of grease:

All motors with ZZ bearings will have SHELL Alvania R3 (lithium base grease). All motors with open bearings will have Polyrex EM (polyurea base grease).
Certain T-frame models will utilize special grease and will be noted on the lubrication nameplate. Please us identical grease or its equivalents when maintaining lubrication schedule.

ATTENTION!
Do not mix different kinds of grease.
Mixing grease with different type of thickeners may destroy its composition and physical properties. Even if the thickeners are of the same type, possible differences in the additive may cause detrimental effects.

5.5.3 Grease quantity

The amount of grease per replenishment depends on the type, size and construction of the bearings. The maximum amount of one replenishment for each bearing is shown in Table 2.

5.5.4 Re-greasing

If re-lubrication is to be performed when the motor is running, stay clear of rotating parts.

It is advisable to re-grease when the motor is running to allow the new grease to be evenly distributed inside the bearing.
Before re-greasing, the inlet fitting should be thoroughly cleaned to prevent any accumulated dirt from being carried into the bearing with the new grease. The outlet of grease drainage should be opened to allow the proper venting of old grease.

Use a grease gun to pump grease through grease nipple into the bearings. After re-greasing, operate the motor for 10-30 minutes to allow any excess grease to vent out.

TABLE 1.

Bearing Number		600 RPM	720 RPM	750 RPM	900 RPM	1000 RPM	1200 RPM	1500 RPM	1800 RPM	3000 RPM	3600 RPM
62XX 63XX 72XX 73XX	6210										
	12									2000 Hrs.	
	13										
	14									1000 Hrs.	
	15										
	16									720 Hrs.	
	17							2000 Hrs.			
	18			3000 Hrs.							
	20										
	22										
	24							1500 Hrs.			
	26										
	28					2000 Hrs.		1000 Hrs.			
	30										
	32							500 Hrs.			
	34					1500 Hrs.					
	36										
	38			2000 Hrs.		1000 Hrs.					

Bearing Number		600 RPM	720 RPM	750 RPM	900 RPM	1000 RPM	1200 RPM	1500 RPM	1800 RPM
NU2XX NU3XX	NU214								
	15							2000 Hrs.	
	16								
	17								
	18			3000 Hrs.				1500 Hrs.	
	20								
	22							1000 Hrs.	
	24								
	26					2000 Hrs.			
	28							500 Hrs.	
	30								
	32								
	34			2000 Hrs.		1000 Hrs.			
	36								
	38	2000 Hrs.							
	40								
	44			1000 Hrs.					
	48	1000 Hrs.							

Bearing Number		600 RPM	720 RPM	750 RPM	900 RPM	1000 RPM	1200 RPM	1500 RPM	1800 RPM
222XX 223XX	22220							300 Hrs.	
	22								
	24	1000 Hrs.				500 Hrs.			
	26								
	28								
	30					300 Hrs.			
	32			500 Hrs.					
	34								
	36								
	38	500 Hrs.							
	40			300 Hrs.					
	44								
	48	300 Hrs.							

TABLE 2.

Bearing No.		Amount of replenishment
62XX 72XX NU2XX 2222XX	6210	30 g
	6212	40
	6213	50
	6214	50
	6215	60
	6216	60
	6217	80
	6218	80
	6220	100
	6222	120
	6224	120
	6226	140
	6228	160
	6230	180
	6232	200
	6234	250
	6236	300
	6238	350
	6240	400
	6244	450
	6248	500

Bearing No.		Amount of replenishment
63XX 73XX NU223XX 223XX	6310	40 g
	6312	60
	6313	80
	6314	80
	6315	100
	6316	100
	6317	120
	6318	120
	6320	160
	6322	220
	6324	270
	6326	300
	6328	400
	6330	450
	6332	500
	6334	600
	6336	700
	6338	800
	6340	900
	6344	900
	6348	900

*Fill new grease until it overflows and the old grease is entirely replaced.

5.5.5 Oil re-lubrication (For oil lubrication types only)

Maintain proper lubrication by checking the oil level periodically and adding oil when necessary. Because of the initial clearing action of the bearing and the expansion of the oil as it comes up to operating temperature, the oil level will be higher after the motor has been in operation for a while than it is with the motor at standstill.
Overfilling should be avoided not only because of the possibility that expansion may force the oil over the oil sleeve and on to the rotor, but also because too high an operating oil level prevents the bearing form clearing itself of excess oil. The resultant churning can cause extra loss, high temperatures, and oxidized oil. If, during operation, the oil level goes above the maximum shown on the sight gauge, drain enough oil to bring the level back within the recommended operating range. **Do not permit the operating level to fall below the minimum shown on the gauge.**

ATTENTION!
Should it ever become necessary to add excessive amount of make-up oil, investigate immediately for oil leaks.

Change the oil at regular intervals. The time between oil changes depends upon the severity of operating conditions and, hence, must be determined by the motor user. Two or three changes a year is typical, but special conditions, such as high ambient temperature, may require more frequent changes. Avoid operating the motor with oxidized oil.
Use only good grade, oxidation-corrosion-inhibited turbine oils produced by reputable oil companies.

The viscosity of the oil to be used depends upon the type and size of the bearings, its load and speed, the ambient temperature, and the amount and temperature of the cooling water (if used)). The lubrication nameplate or instructions with each motor specifies the viscosity range of oil suitable for average conditions. The usual oil viscosity range of oil suitable for average conditions. The usual oil viscosity recommendations are summarized in Table 3. Operation in ambient temperatures that are near or below freezing may require preheating the oil or the use of special oil. Whenever the motor is disassembled for general cleaning and reconditioning, the bearing housing may be washed out with a suitable cleaning solvent. Be sure that the oil-metering hole is clear, and then dry the housing thoroughly before re-assembly, and ensure all traces of cleaning solvent have been removed.

TABLE 3 Oil Viscosity**

Bearing function and location	Bearing Type	Oil Viscosity - SSU	
		@ 100℉	@ 200℉
Thrust Bearing	72XX, 73XX Angular contact ball And/or (62XX, 63XX)	150	45
	Spherical roller	300	53
	Plate (Kingsbury Type)	300	53

**Remark: When a lubrication nameplate attached to the motor, use lubrication oil it stipulates.

5.5.6 Cleaning and installation of bearings

(a) Apply the proper amount of grease to the disassembled parts of the bearing after they have been thoroughly cleaned with high quality cleaning oil. Then protect them from contamination before and during assembly.

(b) Bearing installation

ATTENTION!
Before installing the bearings, make sure that the shaft mounted parts inside the bearings are in place before installation.

Since the bearing is a high precision component, it is important to avoid ingression of dust and foreign matter, and hammering during cleaning and installation. Use extreme care and insure clean conditions during installation and assembly.

ATTENTION!
The best way for bearing installation is heat shrinking. Knocking and hammering during installation should be avoided absolutely.

The bearing should be heated in a bath of clean oil at a temperature of approximately 80℃. After warming, slide the bearings in place quickly and nimbly so that it has not shrunk before being fully in position.
Grease the bearing after the temperature returns to normal, and then reassemble the motor.

5.6 Maintenance of sleeve bearings

5.6.1 Daily inspections

(a) Ensure the volume and quality of lubrication oil are in compliance with specifications.

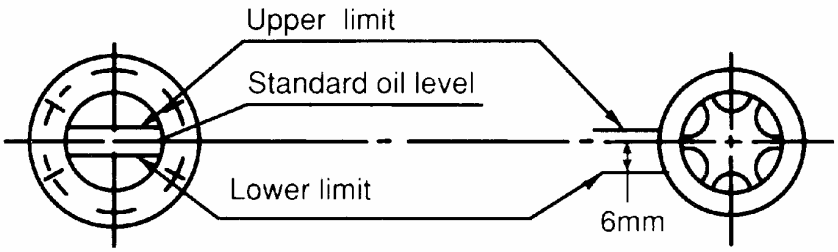

Fig. 12

(b) Ensure there is motion of the oil ring and it is not clamped.

(c) The indicator of the shaft endplay should be restricted within the specified range of the red groove of the shaft or the ±3mm (.118 in.) range of the drive-end shaft shoulder, or the bearing may be damaged.

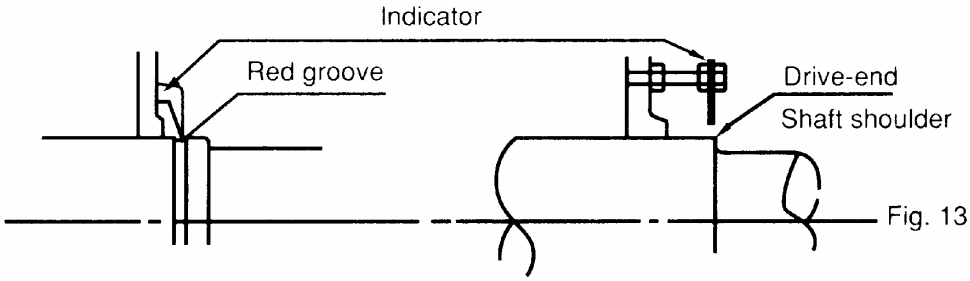

Fig. 13

5.6.2 Regular examination

(a) Periodical change of oil

The oil reservoirs of self (not flood) lubricated bearings should be drained and refilled about every six (6) months. More frequent changes may be needed on high speed (3600 rpm) motors or if severe oil discoloration or contamination occurs. In conditions where contamination does occur, it may be advisable to flush the reservoir with kerosene to remove any sediment before new oil is added. Proper care must be taken to thoroughly drain the reservoir of the flushing material before refilling with the new oil.

Refill the reservoir to the center of oil sight glass with a rust and oxidation inhibited turbine grade oil. Refer to the outline and lubrication nameplate for the correct viscosity.

(b) Quantity of lubrication oil

Please refer to the lubrication nameplate for oil quantity.

(c) Oil viscosity

(d)

ISO	Equivalents	Viscosity (SUS/100℉)
VG32	Esso Teresso 32	150
VG46	Esso Teresso 46	200
VG68	Esso Teresso 68	300

5.6.3 Disassembly

Prior to disassembling, ensure the power supplies are disconnected and there are no moving parts.

The bearing sleeve is of the spherically seated, self-aligning type. The opposite drive end bearing is normally insulated for larger motors (or when specified). On some motors, the insulation is bonded to the spherical seat of the bearing housing.

ATTENTION!
Extreme care must be exercised in removing the bearing sleeve from the insulated support to avoid damaging this insulation.

The following is the recommended procedure for removing the bearing sleeve:

(a) Remove the oil drain plug in the housing bottom and drain the oil sump.

(b) Remove all instrumentation sensors that are in contact with the bearing sleeve. These would include resistance temperature detectors, thermocouples, thermometers, etc..

(c) Remove the socket head bolts holding the bearing cap and the inner air seal. The end cover plate must also be removed if the non-drive end bearing is being disassembled. Remove the bearing cap and top half of the inner air seal. Place them on a clean, dry surface to avoid damage to the parting surfaces.

(d) Remove the top half of the bearing sleeve using suitable eyebolts in the tapped holes provided. Lift the bearing top straight up and avoid any contact with the shoulders of the shaft journals that might damage the thrust faces of the bearing. Place on a clean, dry surface taking care to prevent damage to either the parting surfaces or the locating pins that are captive n the top bearing half.

(e) Remove the screws at the partings in the oil ring and dismantle the ring by gently tapping the dowel pin ends with a soft face mallet. Remove the ring halves and immediately reassemble them to avoid any mix up I parts or damage to the surfaces at the partings.

(f) Pull up on the garter spring surrounding the floating labyrinth seal and carefully slip out the top half. Rotate the garter spring until the lock is visible. Twist counter-clockwise to disengage the lock, remove the garter spring then rotate the lower half of the seal out of the groove in the bearing housing. Note the condition of these floating labyrinth seals. If they are cracked or chipped, they must be replaced. Do not attempt to reuse a damaged seal.

(g) To remove the bottom bearing half, the shaft must be raised a slight amount to relieve pressure on the bearing. On the drive end, this can be done by jacking or lifting on the shaft extension. Protect the shaft. On the non-drive, jacing or lifting can be done using bolts threaded into the tapped holes provided in the shaft end.

(h) Roll the bottom bearing half to the top of the shaft journal and then lift it using suitable eyebolts threaded into the holes provided. Again avoid any contact with the shaft shoulders that could damage the bearing thrust faces. Place the lower bearing half on a clean, dry surface to protect the parting surfaces.

Use extreme care when rolling out the lower bearing half. Keep the hands and fingers well clear of any position where they might be caught by the bearing half if it were accidentally released and rotated back to its bottom position. Serious personal injury could result.

(i) Protect the shaft journal by wrapping it with clean, heavy paper or cardboard.

5.6.4 Re-assembly

Bearing re-assembly is basically a reverse of the disassembly procedures outlined above, with the following suggestions:

(a) The interior of the bearing housing should be cleaned and then flushed with clean oil or kerosene.

(b) The bearing halves and the shaft journal should be wiped clean using lint-free cloth soaked with clean oil.

(c) All parts should be carefully inspected for nicks, scratches, etc., in any contract surfaces. Such imperfections should be removed by an appropriate method such as stoning, scraping, filling, etc., followed by thorough cleaning.

(d) Before installing the floating labyrinth seal halves, observe their condition. Do not attempt to use a cracked or chipped seal. The bottom half seal has a set of drilled holes in its side face. These must be place at the bottom toward the inside of the bearing so that accumulating oil may drain back into the housing.

(e) Put a bead of Curil-T around the seal half O.D.'s on both sides adjacent to the garter spring groove. This will prevent oil by-passing the seal around its outside.

(f) Place the bottom seal half on top of the shaft and roll it into position. Install the top half and insert the garter spring pulling up on both ends to permit engaging the lock. Run a bead of Curil-T around the O.D's on both sides adjacent to the garter spring groove on this half also.

(g) Carefully reassemble the two oil ring halves. Inspect the dowel pins for burrs and straightness and make any corrections required. Do not force the ring halves together. Excessive force may alter the roundness or flatness of the oil ring which can change its oil delivery performance.

(h) Some of the pipe plugs in the housing are metric thread type. These are identified as those, which have a copper, lead, or similar material washer. If these plugs are removed,

be careful not to lose the washers. Before re-assembly, inspect the washers and replace them as required.

(i) Before installing the bearing cap, observe the position of the floating labyrinth seal. The "tab" must be on top to engage the pocket. Failure to position the seal properly will result in damage when the cap is assembled.

ATTENTION!
(1) Curil-T is the only approved compound for use in the assembly of the bearings on this motor. Other products may harden and impede the operation.
(2) During the re-assembly of the bearing parts, a thin layer of Curil-T should be applied to all gaskets and machined interface surfaces. This suggestion does not apply to the machined surfaces of the bearing liner halves.
(3) When seating the bearing shell, apply a thin layer of lube oil at the spherical surface of the liner. Slowly roll the lower bearing liner into the bearing housing making sure that the splinted surface of the liner and the housing are flush. Gradually lower the shaft onto the bearing. The weight of he shaft will help rotate the bearing liner so that the babbitt surface of the liner will match the slope of the journal. Sometimes it is required to use a rubber mallet to tap lightly on the bearing housing while slowly rolling the shaft to help this seating operation.

5.7 Maintenance of slip ring (For Wound Rotor Motors only)

Ensure motor is disconnected from power supplies and there are no accessible moving parts before maintenance operation.

5.7.1 Adjustment of carbon brush

(a) Brush pressure for normal operation:
- Electro-graphite brush…..0.2~0.25 kg/cm²
  When frequent vibrations are evident or the brush is small (area below 0.5 cm²), the pressure should be greater than as shown.

(b) Adjustment of brush pressure:
The brush pressure should be adjusted to keep normal operation as it wears.
- The brush pressure may be reduced after use, so it is necessary to re-adjust. For adjustment, please turn adjusting screw, pressure adjusting pin or pressure adjusting plate as shown in Fig. 14 to obtain the correct tension (=0.23 x brush cross sectional area in cm²) ±10% kg.

(c) Brush pressure need not be adjusted if constant force spring is used as shown in Fig. 15 and Fig. 16.

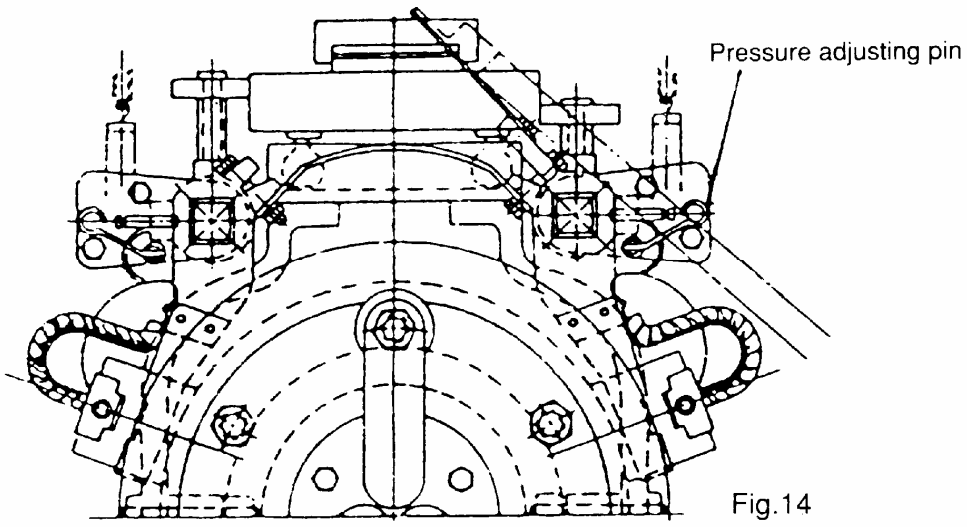

Fig.14

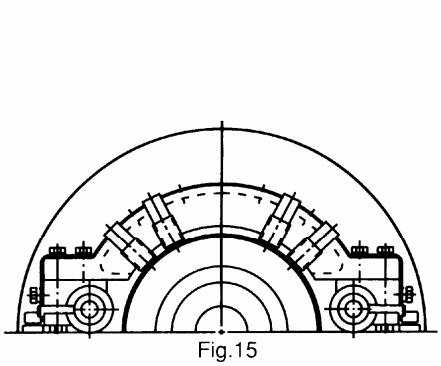

Fig.15

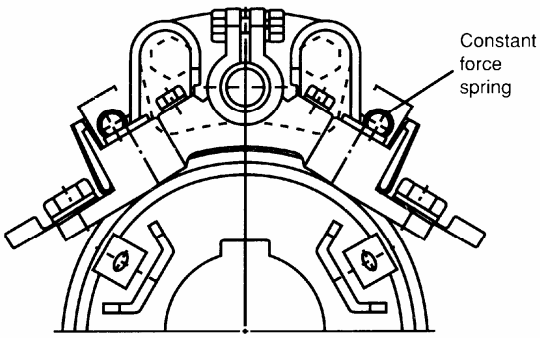

Fig.16

5.7.2 Brush replacement

The carbon brush is a part of the equipment which is easily worn away, replace it after it is worn to ½ ~ ¾ of original size.

(a) Brush material

The brush material is important to the performance of the motor. Only the most appropriate materials are chosen by TWMC, and are listed on the nameplate of the motor. It is important to know this when you replace the brush, so a recommended type is used.

(b) Dimensions

Brush, holder and gap between them, please refer to CNS 2322 C4051 or JIS C2802.

ATTENTION!
The gap between a brush and it holder is important for good performance and safety of the motor.

(c) Adjustment of new brushes (Shown in Fig. 17)

(1) Polish the new brush with a file until is assumes the appropriate contour of the slip ring which it touches.

(2) Place sand-paper (JIS R6252 No. 40…50) on the slip ring with the abrasive face of the paper against the brush to induce a closer contact by rubbing against each other.
(3) Repeat item 2 with fine sand –paper (JIS R6252 No. 100 to 200) until the contact surface between brush and slip ring exceeds 80%.
(4) Finally, clean the contaminated slip ring and brush with clean cloth or compressed air.

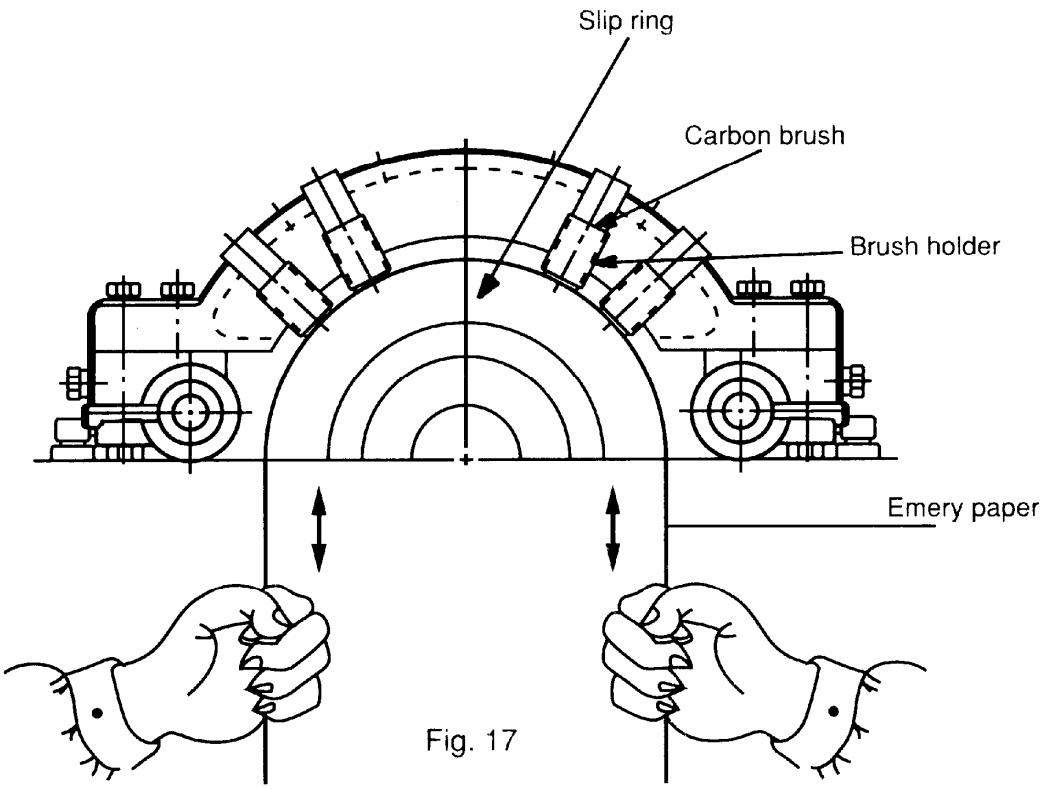

Fig. 17

5.8 Maintenance of non-reverse ratchet mechanism (For Vertical high Thrust Motor only)

5.8.1
In the pump piping system, a check valve and a stop valve should be installed in the discharge line. The check valve, placed between the pump and the stop valve, is to protect the pump from reverse flow and excessive backpressure. The stop valve is used in priming, starting and when shutting down the pump. It is advisable to close the stop valve before stopping the pump. This is especially important when the pump is operated against a high static head.

TWMC vertical high thrust motors are equipped with non-reverse ratchet (N.R.R.) mechanism only when requested by the pump manufacturer. Typical construction of the N.R.R. mechanism is shown as Fig 18 below.

The N.R.R. mechanism keeps the pump and motor from rotating in the reverse direction. Thus prevents damage from over-speeding and damage to water-lubricated pump shaft bearings

when, on shutdown, the falling water column tends to drive the pump in the reverse direction. In normal operation, the ratchet pins are lifted by the ratchet teeth and are held clear by centrifugal force and friction as the motor comes up to speed. When power is removed, the speed decreases and the pins fall. At the instant of reversal, a pin will catch in a ratchet tooth and prevent backward rotation.

5.8.2

The service life of ratchet pins depends not only on the reverse shock load between the pin and ratchet tooth when pump stopped but also the frequency of pump starting and stopping while in service. Provided that the pins are deformed due to this reverse shock load, then the up and down motion of the ratchet pins could be sluggish or jammed and that unusual noises shall arise.

The recommended replacement period for these ratchet pins is every three (3) years. If the reverse shock load is greater than 30% of motor rated torque or the starting frequency is more than twice per day, then the replacement period should be halved.

ATTENTION!
The check valve and stop valve in the discharge line should be regularly inspected and maintained to assure the normal function of these valves. This is important to protect the pump and motor from damage and increase the service life of the N.R.R. mechanism.

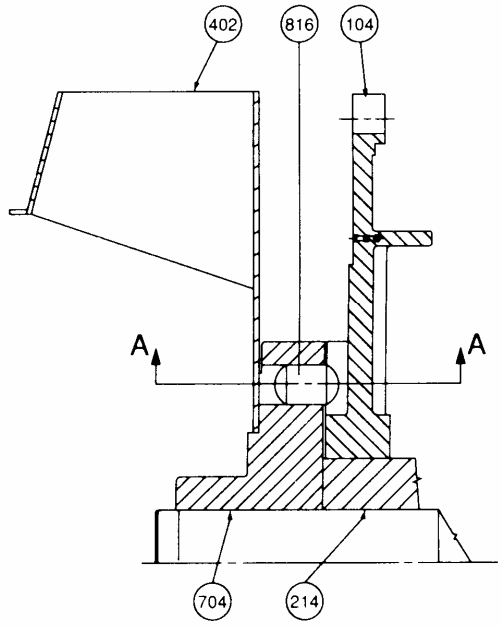

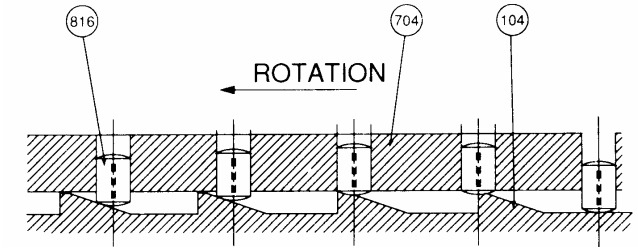

SECTION A-A

ITEM	NAME
104	RATCHET
214	BEARING SEAT
402	EXTERNAL FAN
704	RATCHET PIN CARRIER
816	RATCHET PIN

Fig. 18

6. FAULT FINDING AND RECOGNITION

Kinds of Breakdown	Symptoms	Possible Causes	Remedies
Fail to start without load	Motionless and soundless	Power-off	Consult power company
		Switch-off	Switch-on
		No fuse	Install fuse
		Broken wiring	Check wiring and repair
		Broken lead	Check wiring and repair
		Broken windings	Check windings and repair
	Fuse blowing. (Automatic switch trips off, slow start with electromagnetic noise)	Short circuit of circuit switches	Check circuit switches and replace
		Incorrect wiring	Check wiring according to nameplate
		Poor contact at terminal	Lock tightly
		Windings grounded	Factory repair
		Broken windings	Factory repair
		Poor contact of circuit switches	Check and repair
		Broken wiring	Check and repair
		Poor contact of starting switches	Check and repair
		Short circuit of starting switches	Check and repair
		Incorrect connections of starting switches	Connect according to nameplate
Loading after start	Fuse blowing. Fail to restart due to trip-off of automatic switch	Insufficient capacity of fuse	Replace fuse if wiring permits
		Overload	Lighten load
		High load at low voltage	Check circuit capacity and reduce load
	Overheating motor	Overload or intermittent overload	Lighten load
		Under-voltage	Check circuit capacity and power source
		Over-voltage	Check power source
		Ventilation duct clogged	Remove the foreign matter in the duct
		Ambient temperature exceeds 40°C	Correct insulation class to B or F, or lower ambient temperature
		Friction between rotor and stator	Factory repair
		Fuse blown (Single-phase rotating)	Install the specified fuse
		Poor contact of circuit switches	Check and repair
		Poor contact of circuit starting switches	Check and repair
		Unbalance three-phase voltage	Check circuit or consult power company

Kinds of Breakdown	Symptoms	Possible Causes	Remedies
Loading after start	Speed falls sharply	Voltage drop	Check circuit and powers source
		Sudden overload	Check machine
		Single-phase rotating	Check circuit and repair
	Switch overheat	Insufficient capacity of switch	Replace switch
		High load	Lighten load
	Bearing over-heating	High belt tension	Adjust belt tension
		Slack belt tension	Adjust belt tension
		Misalignment between motor and machine shafts	Re-align
		Over speed of bearing outer-ring	Adjust bracket
		High bearing noise	Replace the damaged bearing
Noise	Electromagnetic noise induced by electricity	Occurrence from its first operation	May be normal
		Sudden sharp noise and smoking	Short circuit of windings should be repaired at the factory
	Bearing noise	Noise of low shishi or Thru-Thru	May be normal
		Kala-Kala as a result of poor lubrication	Grease
		Kulo-Kulo as a result of poor lubrication	Clean bearing and grease
		Sa-Sa or larger noise	Replace the damaged bearing
	Mechanical noise caused by machinery	Loose belt sheave	Adjust key and lock the screw
		Loose coupling or skip	Adjust the position of couplings, lock key and screw
		Loose screw on fan cover	Lock fan cover screw tightly
		Fan rubbing	Adjust fan position
		Rubbing as a result of ingression of foreign matter	Clean motor interior and ventilation ducts
		Wind noise	Noise induced by air flowing through ventilation ducts
		Induced by conveyance machine	Repair machine
Vibration	Electromagnetic vibration	Short circuit of winding	Factory repair
		Open circuit of rotor	Factory repair
	Mechanical vibration	Unbalanced rotor	Factory repair
		Unbalanced fan	Factory repair
		Broken fan blade	Replace fan
		Unsymmetric centers between belt sheaves	Align central points
		Central points of couplings do not lie on the same level	Adjust the central points of couplings to the same level
		Improper mounting installation	Lock the mounting screws
		Motor mounting bed is not strong enough	Reinforce mounting bed

Remarks:

(1) Circuit switches: These include knife switches, electromagnetic switches, fuse and other connection switches etc.

(2) Starting switches: These include Delta-Star starters, compensate starters, reactance starters, resistor starters, starting controller's etc.